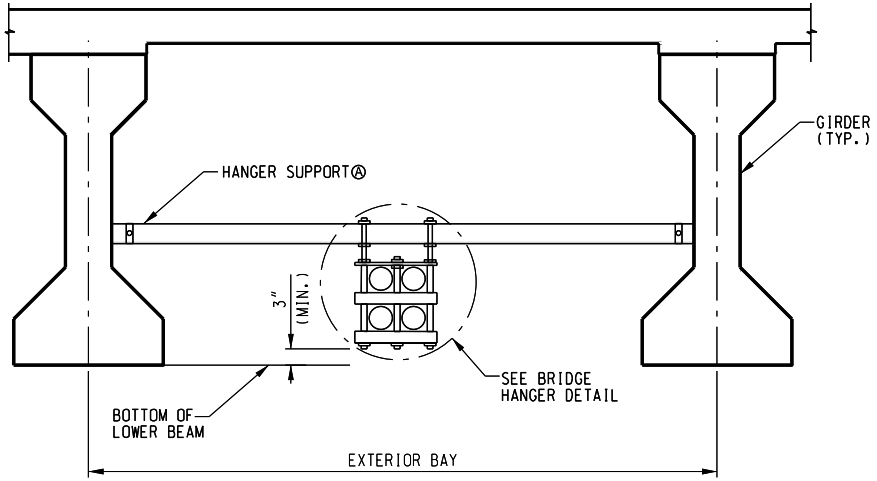

TYPICAL SECTION

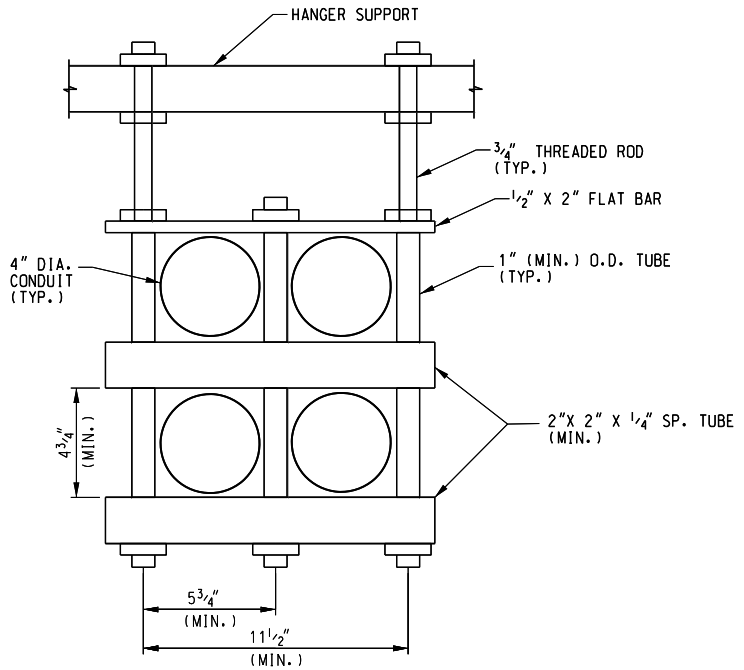

BRIDGE HANGER DETAIL

BRIDGE HANGER ATTACHMENT

NOTES:

4" CONDUIT WEIGHT= 0.49 LBS/FT.

FIBER INSIDE CONDUIT WEIGHT= 0.32 LBS/FT.

3/4" THREADED ROD HARDWARE SHALL INCLUDE FINISHED HEX NUT, LOCK WASHER AND FLASH WASHER.

THREADED RODS AND HARDWARE SHALL BE GALVANIZED PER ASTM A153.

FLAT BAR, SQUARE TUBE AND ROUND TUBE SHALL BE PAINTED FIBERGLASS GRAY PER SECTION 710 OF THE STANDARD SPECIFICATIONS

CONDUITS SHALL PASS THROUGH BRIDGE END BENT USING 5" (MIN.) I.D. PIPE SLEEVES. MAINTAIN MINIMUM OF 2" CLEAR BETWEEN PIPE SLEEVES.

Ⓐ DESIGN HANGER SUPPORT SIZE AND SPACING BASED ON WEIGHTS PROVIDED. IN LIEU OF A HANGER SUPPORT, BRIDGE HANGER MAY BE ATTACHED TO THE DECK USING A FERRULE INSERT.