FED. RD. DIV. NO.	STATE	COUNTY	FILE NO.	PROJECT NO.	ROUTE NO.	SHEET NO.
	S.C.					IT 02

South Carolina Department of Transportation

DETAIL DRAWINGS

CAM SITE DETAIL FOR OVERHEAD ELECTRICAL SERVICE

ROADWAY

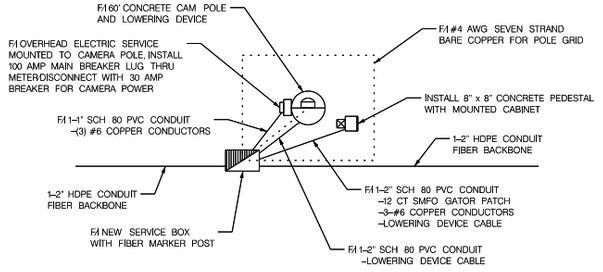

NOT TO SCALE

THIS DETAIL SHOWS THE TYPICAL SITE LAYOUT FOR A CAM SITE ACCORDING TO THE SPECS PROVIDED BY THE SCDOT, IT MAY NOT REFLECT THE EXACT SITE LAYOUT.

CONDUCTOR SIZING FOR ELECTRIC SERVICE IS TO BE DETERMINED BY THE CONTRACTOR ONCE THE LENGTH OF THE RUN IS ESTABLISHED (SEE SPECIFICATIONS).

CONDUIT SIZING IS SUBJECT TO CHANGE BASED ON REQUIRED CONDUCTOR SIZE.

CONCRETE PEDESTAL WITH 100 AMP DISCONNECT IS ONLY REQUIRED IF THE POWER COMPANY METERING LOCATION IS GREATER THAN 100 FT FROM THE CABINET, IF METERING LOCATION IS LESS THAN 100 FT FROM THE CABINET, INSTALL SERVICE FROM THE METER DIRECTLY INTO THE ELECTRIC PULL BOX.

CAM SITE DETAIL FOR UNDERGROUND ELECTRICAL SERVICE

ROADWAY

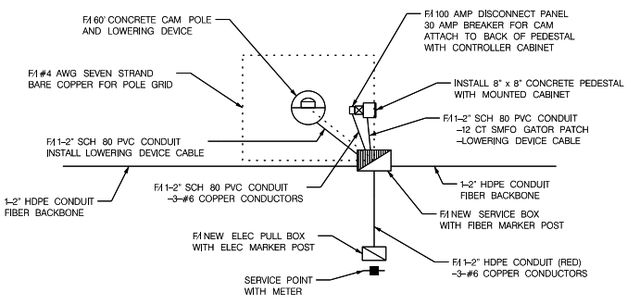

NOT TO SCALE

THIS DETAIL SHOWS THE TYPICAL SITE LAYOUT FOR A CAM SITE ACCORDING TO THE SPECS PROVIDED BY THE SCDOT, IT MAY NOT REFLECT THE EXACT SITE LAYOUT.

CONDUCTOR SIZING FOR ELECTRIC SERVICE IS TO BE DETERMINED BY THE CONTRACTOR ONCE THE LENGTH OF THE RUN IS ESTABLISHED (SEE SPECIFICATIONS).

CONDUIT SIZING IS SUBJECT TO CHANGE BASED ON REQUIRED CONDUCTOR SIZE.

CONCRETE PEDESTAL WITH 100 AMP DISCONNECT IS ONLY REQUIRED IF THE POWER COMPANY METERING LOCATION IS GREATER THAN 100 FT FROM THE CABINET, IF METERING LOCATION IS LESS THAN 100 FT FROM THE CABINET, INSTALL SERVICE FROM THE METER DIRECTLY INTO THE ELECTRIC PULL BOX.

DMS SITE DETAIL FOR UNDERGROUND ELECTRICAL SERVICE

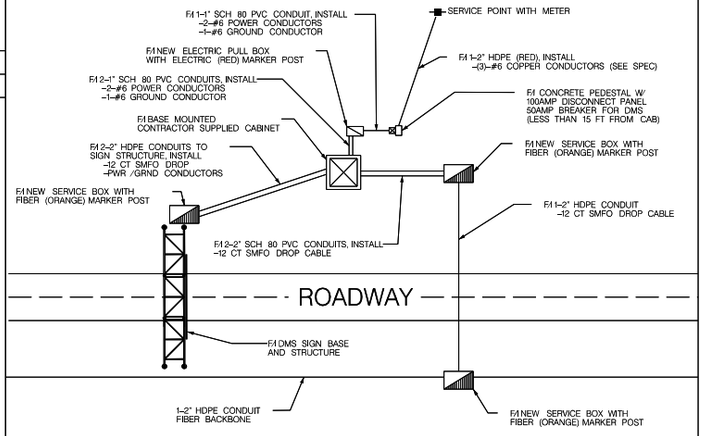

NOT TO SCALE

THIS DETAIL SHOWS THE TYPICAL SITE LAYOUT FOR A DMS SITE ACCORDING TO THE SPECS PROVIDED BY THE SCDOT, IT MAY NOT REFLECT THE EXACT SITE LAYOUT AS PROPOSED IN THE PLAN SHEETS.

CONDUCTOR SIZING FOR ELECTRIC SERVICE IS TO BE DETERMINED BY THE CONTRACTOR ONCE THE LENGTH OF THE RUN IS ESTABLISHED (SEE SPECIFICATIONS).

CONDUIT SIZING IS SUBJECT TO CHANGE BASED ON REQUIRED CONDUCTOR SIZE.

CONCRETE PEDESTAL WITH 100 AMP DISCONNECT IS ONLY REQUIRED IF THE POWER COMPANY METERING LOCATION IS GREATER THAN 100 FT FROM THE CABINET, IF METERING LOCATION IS LESS THAN 100 FT FROM THE CABINET, INSTALL SERVICE FROM THE METER DIRECTLY INTO THE ELECTRIC PULL BOX.

REV. NO.	BY	DATE	DESCRIPTION OF REVISION
4			
3			
2			
1			

DESIGNED BY: _____ DATE _____
DRAWN BY: _____ DATE _____
CHECKED BY: _____ DATE _____

SOUTH CAROLINA DEPARTMENT OF TRANSPORTATION

I.T.S. INSTALLATION

SCALE: NO SCALE

E:\Headinger\DRs - DOH_Design_TYPICALS\1yp_it2.dgn
7/8/2008

FED. ROAD DIV. NO.	STATE	COUNTY	FILE NO.	PROJECT NO.	ROUTE NO.	SHEET NO.	TOTAL SHEETS
	S.C.					IT 03	

DETAILS & CLEARANCE DIAGRAM FOR OVERHEAD SIGNS

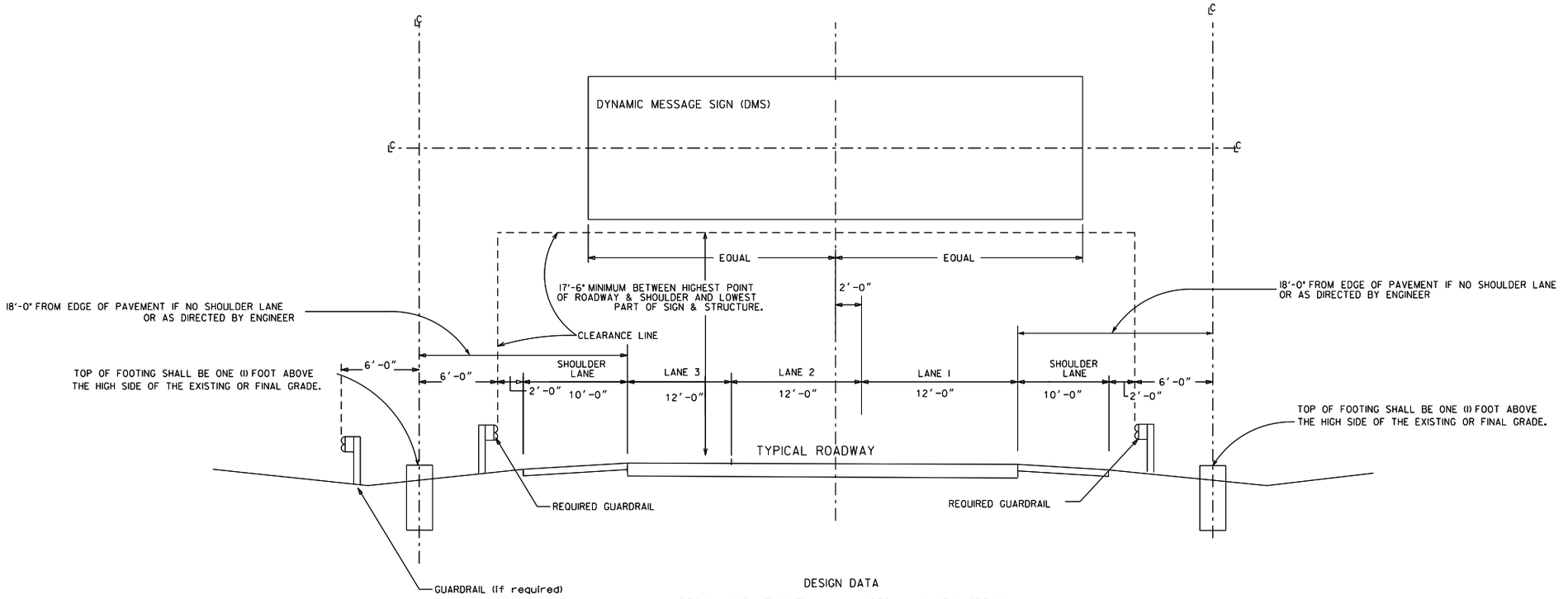

DESIGN DATA

DESIGN WIND VELOCITY	PER A.A.S.H.T.O. SPECS.
HEIGHT ABOVE GENERAL GROUND ELEVATION	17' - 30'
STRUCTURE LENGTH	VARIES

NOTE:
MAINTENANCE WALKWAY SHALL EXTEND FROM RIGHT SIDE OF THE SIGN TO THE UPRIGHT SUPPORT AND BE CONTINUOUS TO ALL SIGNS AND SHALL EXTEND A MINIMUM OF 1'-0" OUTSIDE THE EDGE OF ALL SIGNS.

DATE	REVISIONS
3/07	REVISED STND

SOUTH CAROLINA
DEPARTMENT OF TRANSPORTATION
ENGINEERING DIVISION
COLUMBIA S.C.

SUBJECT TITLE

SPECIFIC LOCATION

DYNAMIC MESSAGE SIGN (DMS) CLEARANCE DETAIL

DESIGNED	CITY		COUNTY
DRAWN	APPROVED BY		APPROVED BY
CHECKED	DIR. OF TRAFFIC ENGINEERING		ENGINEER
REVIEWED	SCALE	DATE	SHEET NO. / INDEX NO.
RECOMMENDED	NO SCALE		OF

FED. RD. DIV. NO.	STATE	COUNTY	FILE NO.	PROJECT NO.	ROUTE NO.	SHEET NO.
	S.C.					IT 04

South Carolina Department of Transportation

DETAIL DRAWINGS

CCTV STEEL 50' POLE - TYPICAL DETAIL

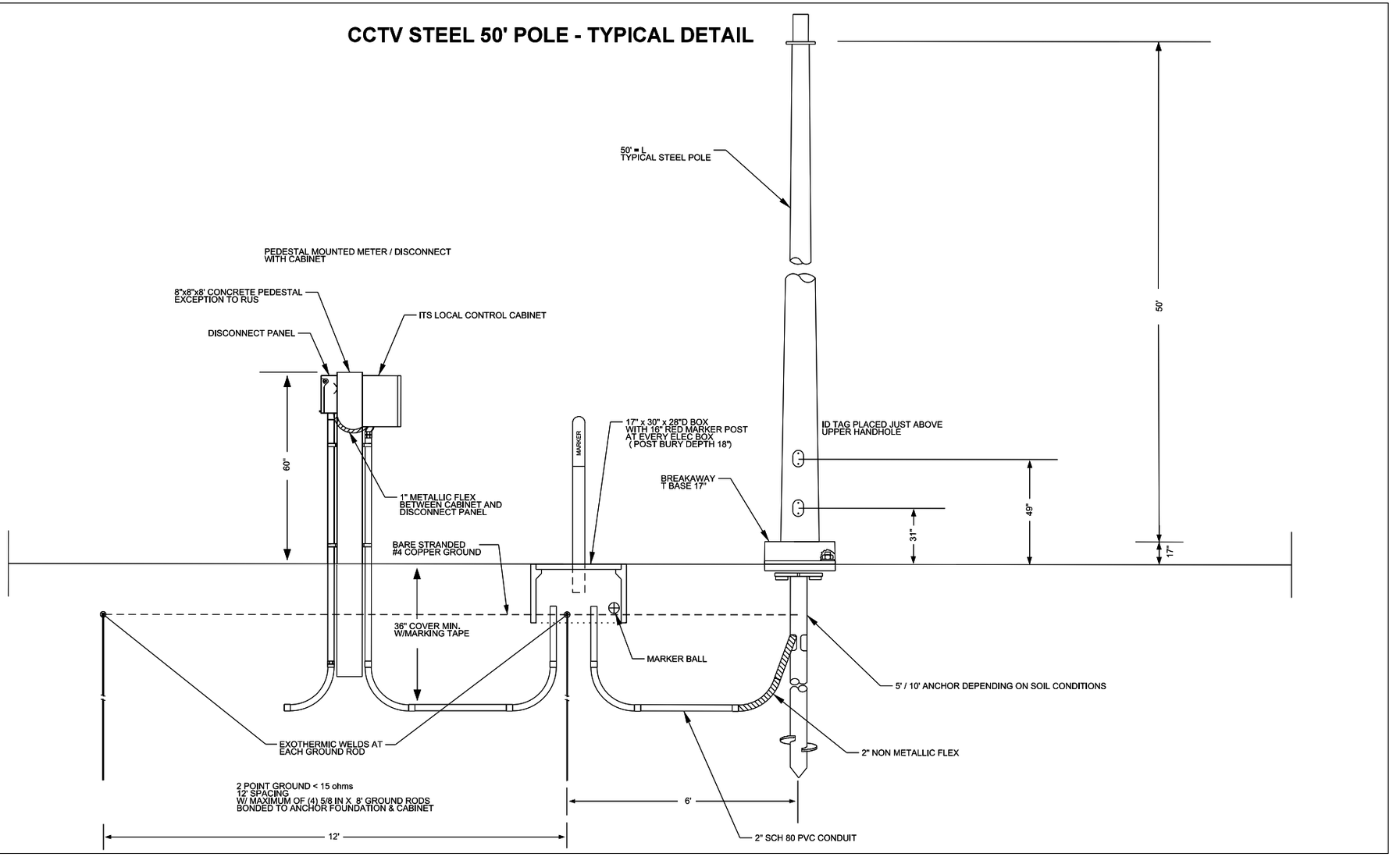

REV. NO.	BY	DATE	DESCRIPTION OF REVISION
4			
3			
2			
1			

DESIGNED BY: _____ DATE _____
DRAWN BY: _____ DATE _____
CHECKED BY: _____ DATE _____

SOUTH CAROLINA DEPARTMENT OF TRANSPORTATION

I.T.S. INSTALLATION

SCALE: NTS

FED. RD. DIV. NO.	STATE	COUNTY	FILE NO.	PROJECT NO.	ROUTE NO.	SHEET NO.
	S.C.					IT 05

South Carolina Department of Transportation

DETAIL DRAWINGS

TYPICAL GROUNDING GRID / SITE LAYOUT

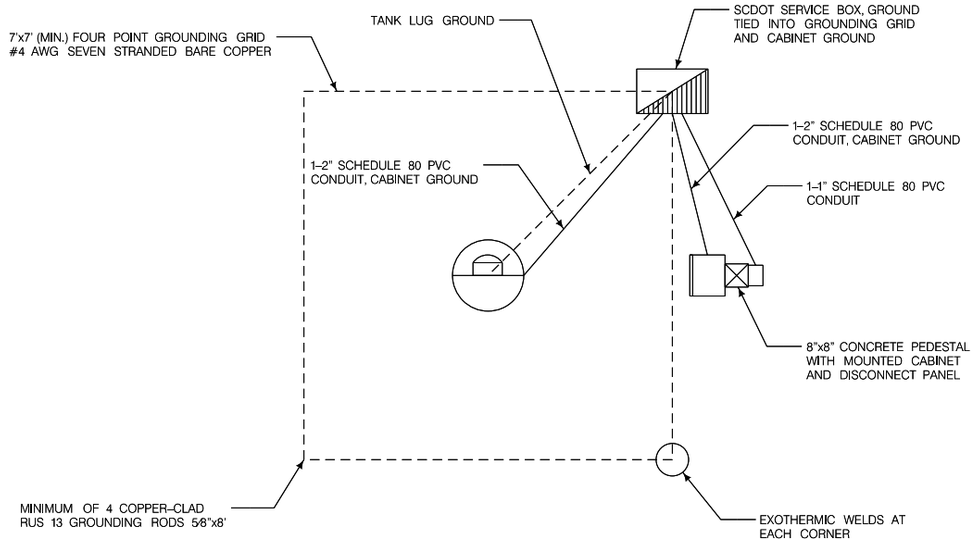

GROUND ROD–

ONE OR MORE GROUND RODS SHALL BE INSTALLED AT THE SERVICE POLE; AND WHERE APPLICABLE, AT THE CONTROLLER ITSELF. THE GROUND ROD SHALL BE MIN. 16MM BY 2.4 METERS (5⁄8 IN BY 8 FT), COPPER–CLAD RUS 13, WITH BRASS OR BRONZE GROUND ROD CLAMP. ADDITIONAL GROUND RODS MAY BE NEEDED TO ACHIEVE PROPER RESISTANCE TO GROUND. THE CONTROLLER GROUND ROD SHALL BE EXOTHERMICALLY WELDED (BY PERSONNEL PROPERLY TRAINED TO MAKE EXOTHERMIC WELDS). GROUNDING SYSTEM SHALL BE NO GREATER THAN 15 OHMS. GROUNDING SYSTEMS SHALL BE TESTED USING THE FALL OF POTENTIAL METHOD AND SHALL BE OVERSEEN BY THE ENGINEER.

GROUND WIRE–

THE GROUNDING WIRE FOR THE SERVICE SHALL BE NO. 6 AWG, BARE, 7 STRANDED WIRE. (NOTE THAT THIS IS IN ADDITION TO THE SOLID GROUNDING WIRE RUNNING DOWN EACH WOODEN POLE AND SHALL BE STAPLED AT A MIN OF EVERY 16 INCHES WITH A COIL OF SOLID COPPER WIRE AT THE BOTTOM AND TOP OF THE POLE.) FOR GRIDS THE GROUND WIRE SHALL BE #4 AWG (7) SEVEN STRANDED OR LARGER AROUND CONCRETE POLES AND #2 OR LARGER AROUND HUB BUILDING. THE GROUNDING FOR THE SERVICE SHALL BE CONNECTED TO THE CABINET GROUND ROD WITH AWG 6 AND THE POLE GROUNDING GRID SHALL BE CONNECTED TO THE CABINET GROUND ROD IN THE ELECTRIC SERVICE PULL BOX, (LOCATED AT THE CABINET) TO MAKE UP A COMPLETE GROUNDING SYSTEM.

PEDESTAL MOUNTED CABINET

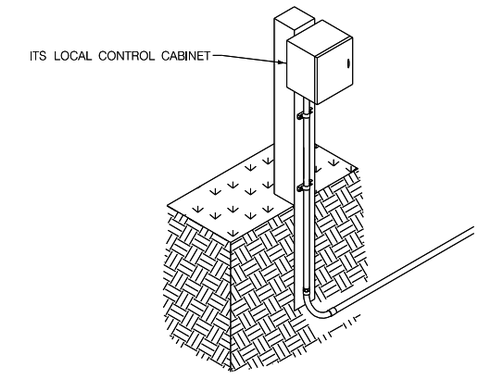

PEDESTAL MOUNTED METER / DISCONNECT WITH CABINET

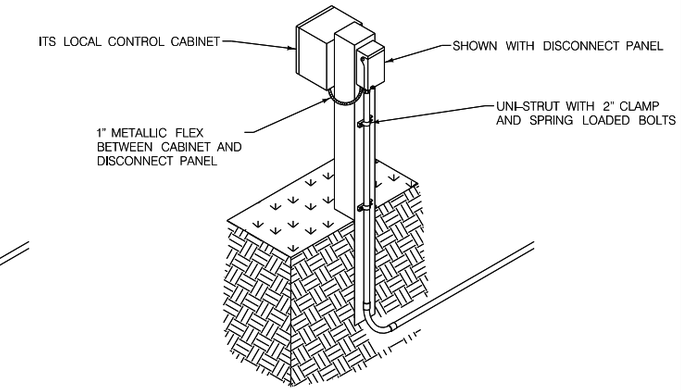

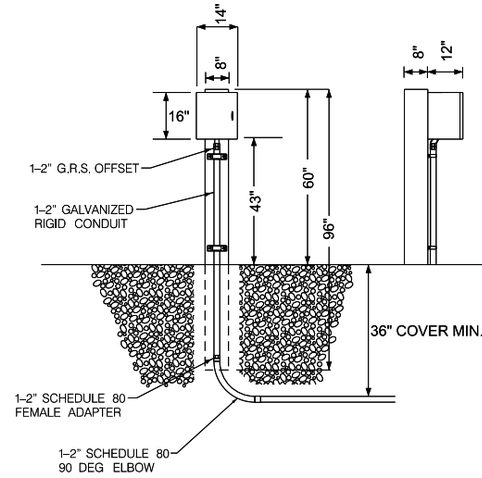

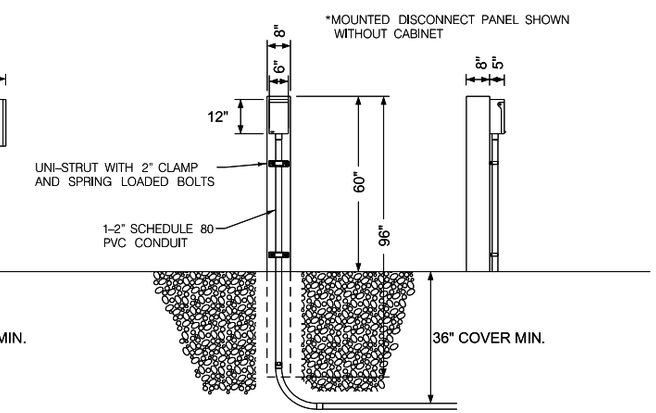

REV. NO.	BY	DATE	DESCRIPTION OF REVISION
4			
3			
2			
1			

DESIGNED BY: _____ DATE _____
DRAWN BY: _____ DATE _____
CHECKED BY: _____ DATE _____

SOUTH CAROLINA DEPARTMENT OF TRANSPORTATION

I.T.S. INSTALLATION

SCALE: NO SCALE

E:\WessingerDR\~ DGN.Design_TYPICALS\Typ.its.dgn
7/16/2008

CONCRETE POLE

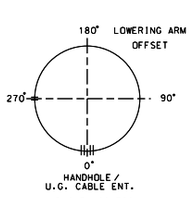

CCTV / DETECTOR POLE
TYPICAL DETAIL

D=DEPTH WHICH IS APPROXIMATELY 10% OF LENGTH PLUS 4 FEET MINIMUM
OR AS REQUIRED BY SOIL ANALYSIS CONDUCTED BY CONTRACTOR

NO SCALE

FED. ROAD DIV. NO.	STATE	COUNTY	FILE NO.	PROJECT NO.	ROUTE NO.	SHEET NO.	TOTAL SHEETS
	S.C.					IT 06	

CONDUIT SCHEDULE

1" FOR GROUNDING
1" TELEPHONE SERVICE
2" TYP. ELECTRICAL SERVICE
2" TYP. FEED TO DMS or CCTV
2" SPARE
2" SPARE
2" MIN. } ITS CABLES, SIZE TO
3" TYP. } BE DETERMINED FOR 40%
4" } CROSS-SECTION MAXIMUM FILLED WITH CABLES

PVC

ALL CONDUIT TO BE CAPPED DURING CONSTRUCTION WORK AND DUCT-SEALED AT COMPLETION

ALL RIGID CONDUIT ENDS TO HAVE BUSHING

PER CABINET MANUFACTURER AND DOT CABINET TYPE
R=RISER (12")
D=DEPTH (INCHES)
W=WIDTH
H=HEIGHT
ANCHOR BOLTS--NUMBER, SIZE, & LOCATION PER MANUFACTURER TEMPLATE

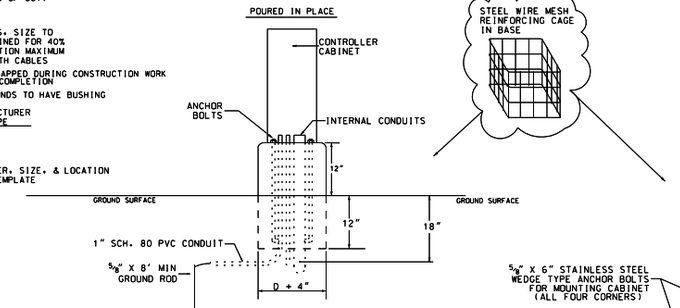

*CONDUIT TYPE, SIZE, NUMBER, AND ORIENTATION SHALL MATCH PLANS OR AS LISTED ABOVE.

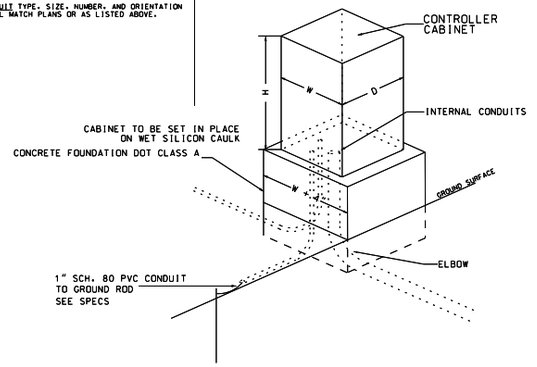

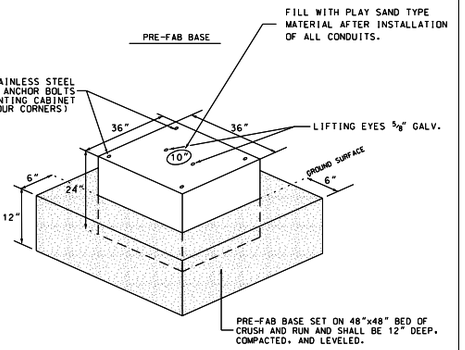

ELEVATED BASE
FOUNDATION DETAILS
FOR BASE MOUNTED CABINET

NO SCALE

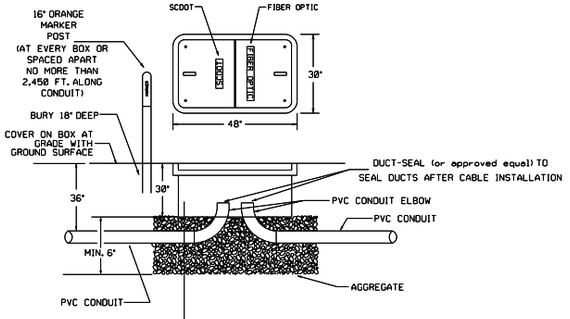

NO SCALE

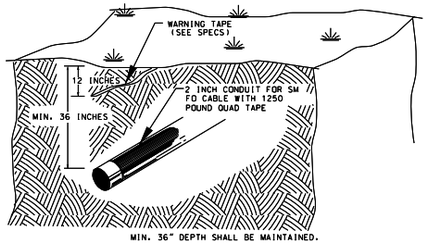

(1) 2" HDPE SCH 80

NO SCALE

DATE	REVISIONS
3/07	REVISED STND

SOUTH CAROLINA DEPARTMENT OF TRANSPORTATION
ENGINEERING DIVISION
COLUMBIA S.C.

SUBJECT TITLE

SPECIFIC LOCATION
CONCRETE CAMERA/DETECTOR POLE DETAIL and MISC. DETAILS

DESIGNED	CITY		COUNTY
DRAWN	APPROVED BY		APPROVED BY
CHECKED	DIR. OF TRAFFIC ENGINEERING		ENGINEER
REVIEWED	SCALE	DATE	SHEET NO. / INDEX NO.
RECOMMENDED	NO SCALE		OF

FED. ROAD DIV. NO.	STATE	COUNTY	FILE NO.	PROJECT NO.	ROUTE NO.	SHEET NO.	TOTAL SHEETS
	S.C.					IT 07	

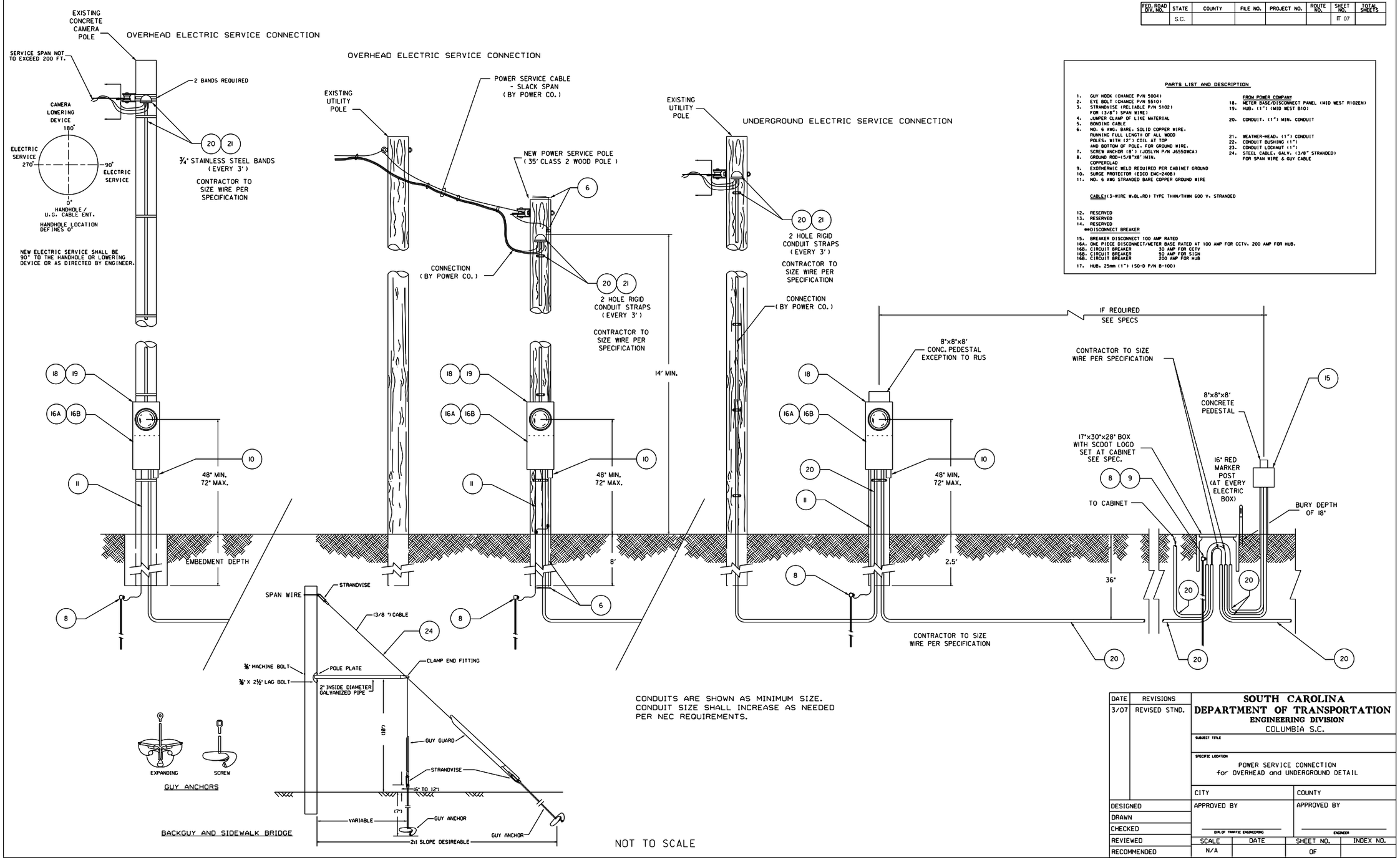

PARTS LIST AND DESCRIPTION

1. GUY HOOK (CHANCE P/N 5004)
2. EYE BOLT (CHANCE P/N 5510)
3. STRANDVISE (RELIABLE P/N 5102) FOR (3/8") SPAN WIRE)
4. JUMPER CLAMP OF LIKE MATERIAL
5. BONDING CABLE
6. NO. 6 AWG. BARE, SOLID COPPER WIRE, RUNNING FULL LENGTH OF ALL WOOD POLES, WITH (2') COIL AT TOP AND BOTTOM OF POLE. FOR GROUND WIRE.
7. SCREW ANCHOR (8') (JOSLYN P/N J6550WCA)
8. GROUND ROD=(5/8"X8')MIN. COPPERCLAD
9. EXOTHERMIC WELD REQUIRED PER CABINET GROUND
10. SURGE PROTECTOR (EDCO EMC-240B)
11. NO. 6 AWG STRANDED BARE COPPER GROUND WIRE

CABLE: (3-WIRE W.BL.RD) TYPE THHN/THWN 600 V. STRANDED

12. RESERVED
13. RESERVED
14. RESERVED

**DISCONNECT BREAKER

15. BREAKER DISCONNECT 100 AMP RATED
16A. ONE PIECE DISCONNECT/METER BASE RATED AT 100 AMP FOR CCTV. 200 AMP FOR HUB.
16B. CIRCUIT BREAKER 30 AMP FOR CCTV
16B. CIRCUIT BREAKER 50 AMP FOR SIGN
16B. CIRCUIT BREAKER 200 AMP FOR HUB
17. HUB. 25mm (1") (50-D P/N B-100)

FROM POWER COMPANY

18. METER BASE/DISCONNECT PANEL (MID WEST R102EN)
19. HUB. (1") (MID WEST B10)
20. CONDUIT. (1") MIN. CONDUIT
21. WEATHER-HEAD. (1") CONDUIT
22. CONDUIT BUSHING (1")
23. CONDUIT LOCKNUT (1")
24. STEEL CABLE, GALV. (3/8" STRANDED) FOR SPAN WIRE & GUY CABLE

DATE	REVISIONS
3/07	REVISED STND.

SOUTH CAROLINA DEPARTMENT OF TRANSPORTATION
ENGINEERING DIVISION
COLUMBIA S.C.

SUBJECT TITLE

SPECIFIC LOCATION

POWER SERVICE CONNECTION
for OVERHEAD and UNDERGROUND DETAIL

DESIGNED	CITY	COUNTY
DRAWN	APPROVED BY	APPROVED BY
CHECKED	DIR. OF TRAFFIC ENGINEERING	ENGINEER
REVIEWED	SCALE	DATE
RECOMMENDED	N/A	

SHEET NO. OF

INDEX NO.

FED. ROAD DIV. NO.	STATE	COUNTY	FILE NO.	PROJECT NO.	ROUTE NO.	SHEET NO.	TOTAL SHEETS
	S.C.					IT 08	

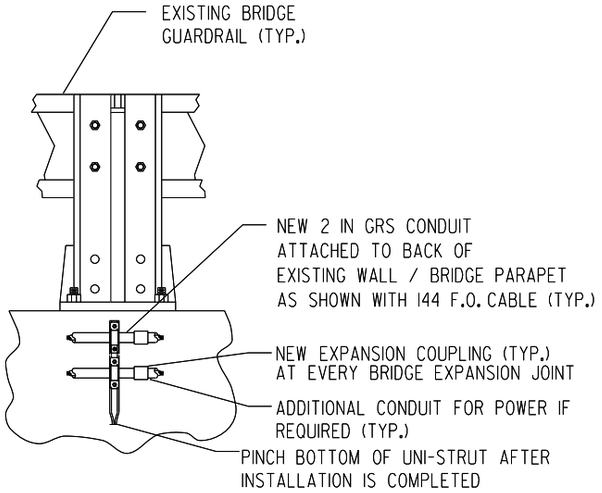

BACK VIEW
(NTS)

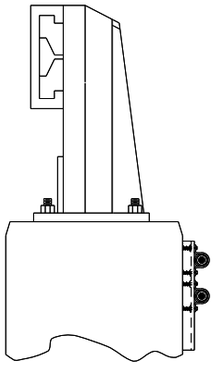

SIDE VIEW
(NTS)

ISOMETRIC VIEW
(NTS)

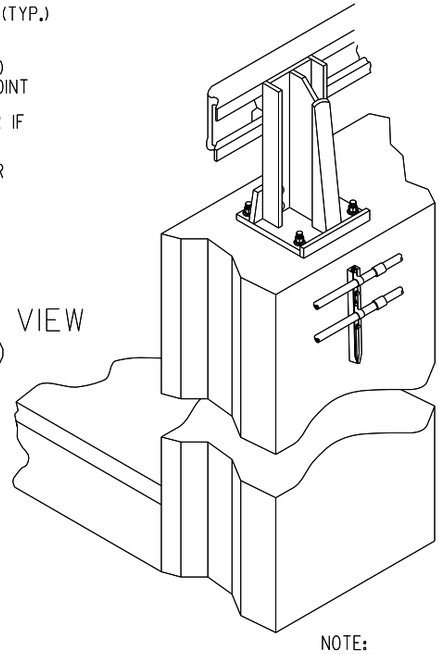

NOTE:
CONTRACTOR TO REQUEST SPECIFICATIONS OF ATTACHMENT DEVICE FROM DEVICE MANUFACTURER

TYPICAL CONDUIT ATTACHMENT

NOTES:

INSTALL (1) 2 IN GRS CONDUIT WITH EXPANSION COUPLINGS AT EVERY BRIDGE JOINT

CONDUIT MOUNTING TO EXISTING BRIDGE PARAPET WALL

CONDUIT MOUNTING EQUIPMENT SHALL BE KINDORF. THE FOLLOWING PART NO.'S SHALL APPLY FOR CHANNEL ASSEMBLY:

CHANNEL (12" LONG) -STAINLESS STEEL
2" PIPE STRAP -STAINLESS STEEL
3/8" x 2" WEDGE ANCHOR -STAINLESS STEEL
3/8" FLAT WASHER -STAINLESS STEEL
3/8" LOCK WASHER -STAINLESS STEEL

DRILL 3/8" DIA. HOLE IN OUTSIDE PARAPET WALL TO ACCOMMODATE CHANNEL INSTALLATION. KINDORF CHANNEL EQUIPMENT SHALL BE PLACED EVERY 5 FT MIN ALONG BRIDGE LENGTH.

EPOXY SHALL BE USED WITH WEDGE ANCHORS

DATE	REVISIONS
3/07	REVISED STND

SOUTH CAROLINA
DEPARTMENT OF TRANSPORTATION
ENGINEERING DIVISION
COLUMBIA S.C.

SUBJECT TITLE

SPECIFIC LOCATION
BRIDGE ATTACHMENT

CITY	COUNTY

DESIGNED	APPROVED BY	APPROVED BY
DRAWN		
CHECKED	DIR. OF TRAFFIC ENGINEERING	ENGINEER
REVIEWED	SCALE / DATE	SHEET NO. / INDEX NO.
RECOMMENDED	NO SCALE	OF

FED. RD. DIV. NO.	STATE	COUNTY	FILE NO.	PROJECT NO.	ROUTE NO.	SHEET NO.
	S.C.					IT 09

SOUTH CAROLINA
DEPARTMENT OF TRANSPORTATION

GENERAL CONSTRUCTION NOTE

1) INTELLIGENT TRANSPORTATION SYSTEM (ITS) TO BE CONSTRUCTED UNDER THE STATEWIDE ITS REPAIR & INSTALLATION CONTRACT.

2) APPROXIMATE LOCATION OF CAMERA POLES IS SPECIFIED ON THE PLAN SHEET.
APPROXIMATE LOCATION OF SERVICE BOXES/LOCAL CONTROLLER CABINETS IS SHOWN ON THE PLAN SHEET, EXACT LOCATION TO BE DETERMINED DURING CONSTRUCTION. CONTACT THE SCDOT FIELD OPERATIONS MANAGER IF SUBSURFACE OR OTHER CONDITIONS WARRANT LOCATING EQUIPMENT/DEVICES ELSEWHERE.

3) CONTRACTOR SHALL INSTALL (1) 2" HDPE ORANGE CONDUIT, WITH A MINIMUM OF 36" OF COVER. ALL CONDUITS ARE TO BE PLACED AT LEAST 30' FROM THE EDGE OF TRAVEL WAY, UNLESS FIELD CONDITIONS DICTATE OTHERWISE. IF CONDUITS ARE PLACED NEAR A RIGHT OF WAY LINE, PLACE A MINIMUM OF 5' INSIDE RIGHT OF WAY LINE UNLESS FIELD CONDITIONS DICTATE OTHERWISE.

4) CONTRACTOR SHALL INSTALL 96 CT SINGLEMODE FIBER OPTIC CABLE WITHIN DESIGNATED CONDUIT, UNLESS DICTATED DIFFERENTLY ON PLAN SHEET. REEL END SPLICES ARE NOT SHOWN ON THE PLAN SHEET.
THE CONTRACTOR SHALL SUBMIT REEL END SPLICE LOCATIONS TO THE SCDOT FIELD OPERATIONS MANAGER FOR APPROVAL.

5) NON-METALLIC WARNING TAPE SHALL BE BURIED 12" BELOW GRADE WHERE ELECTRIC AND COMMUNICATION CONDUIT IS INSTALLED. ADDITIONALLY, DETECTABLE MULE TAPE IS TO BE INSTALLED INSIDE CONDUIT WITH FIBER OPTIC CABLE.

6) CONTRACTOR TO INSTALL NEW FIBER OPTIC SERVICE BOX EVERY 2450' OR AS INDICATED ON THE PLAN SHEET. COILED SLACK TO BE PLACED IN EACH SERVICE BOX, 200' SLACK FOR ALL SERVICE BOXES WITH OR WITHOUT A SPLICE ENCLOSURE. PLACE 100' OF SLACK FOR DROP CABLES IN SERVICE BOX FOR MID SPANS.

7) ALL PULL BOXES SHALL BE ARMORCAST OR HIGHLINE. SERVICE BOX COVERS USED FOR COMMUNICATIONS SHALL HAVE 'SCDOT FIBER' EMBEDDED IN THE COVERS, PULL BOX COVERS USED FOR ELECTRIC SHALL HAVE 'SCDOT ELEC' EMBEDDED IN THE COVER, AND PULL BOX COVERS USED FOR TRAFFIC SIGNALS SHALL HAVE 'SCDOT TRAFFIC' EMBEDDED IN THE COVER.

8) CONTRACTOR TO PROVIDE FIBER OPTIC MARKER POSTS AT ALL NEW SERVICE BOX LOCATIONS AND DEFLECTIONS IN THE CONDUIT ALIGNMENT, AT A MAXIMUM OF 2450'.

9) ALL BORES INDICATED ON PLAN SHEET ARE APPROXIMATE VALUES, TRUE VALUES MAY VARY. ANY LOCATION MARKED AS CONVENIENCE BORES ARE CONSIDERED PLOWABLE.

10) ITS DEVICES/SYMBOLOGY (CAMERA, SERVICE BOX, DMS, CABINET, ETC.) ARE SCALED UP FOR VISIBILITY ON PLANS, THEY ARE NOT TO THE SCALE OF THE DRAWING.

11) CONTRACTOR IS RESPONSIBLE FOR CONTACTING PUPS/811 FOR LOCATION OF EXISTING UTILITIES.

12) ALL PLANS ARE SCHEMATIC IN NATURE. EXACT LOCATIONS SHALL BE DETERMINED IN THE FIELD.

13) BELOW IS A LEGEND THAT IS APPLICABLE TO THIS PROJECT. ADDITIONAL DRAWINGS MAY BE NEEDED AS DETERMINED IN FIELD DURING CONSTRUCTION.

14) CAMERA POLES SHALL BE 18 1/2' FROM WHITE LINE WITH GUARD RAIL INSTALLED IN FRONT.

ITS ELEMENTS

ITS-CAMERA POLE	
ITS-EXISTING FIBER OPTIC SERVICE BOX (EX FOSB)	
ITS-LOCAL CONTROLLER CABINET, BASE-MOUNTED	
ITS-NEW FIBER OPTIC SERVICE BOX (FOSB)	
ITS-NEW ELECTRIC PULL-BOX	
EXISTING CONDUIT (COMM. IN CONDUIT)	— FOC
PROPOSED CONDUIT (COMM./ELEC. IN CONDUIT)	_____
ROADWAY BORE (COMM./ELEC. IN CONDUIT)	. . . . .
RIGID GALVANIZED CONDUIT (IDENTIFIED ON PLAN SHEET, COMM. IN CONDUIT)	— ▬ — ▬

REV. NO.	BY	DATE	DESCRIPTION OF REVISION
4			
3			
2			
1			

DESIGNED BY: _____ DATE _____
DRAWN BY: _____ DATE _____
CHECKED BY: _____ DATE

SOUTH CAROLINA DEPARTMENT OF TRANSPORTATION

I.T.S. INSTALLATION

SCALE: NO SCALE

E:\wesdinger\DRV~ DGN_Design_TYPICALS\Typ_IT9.dgn
7/8/2008