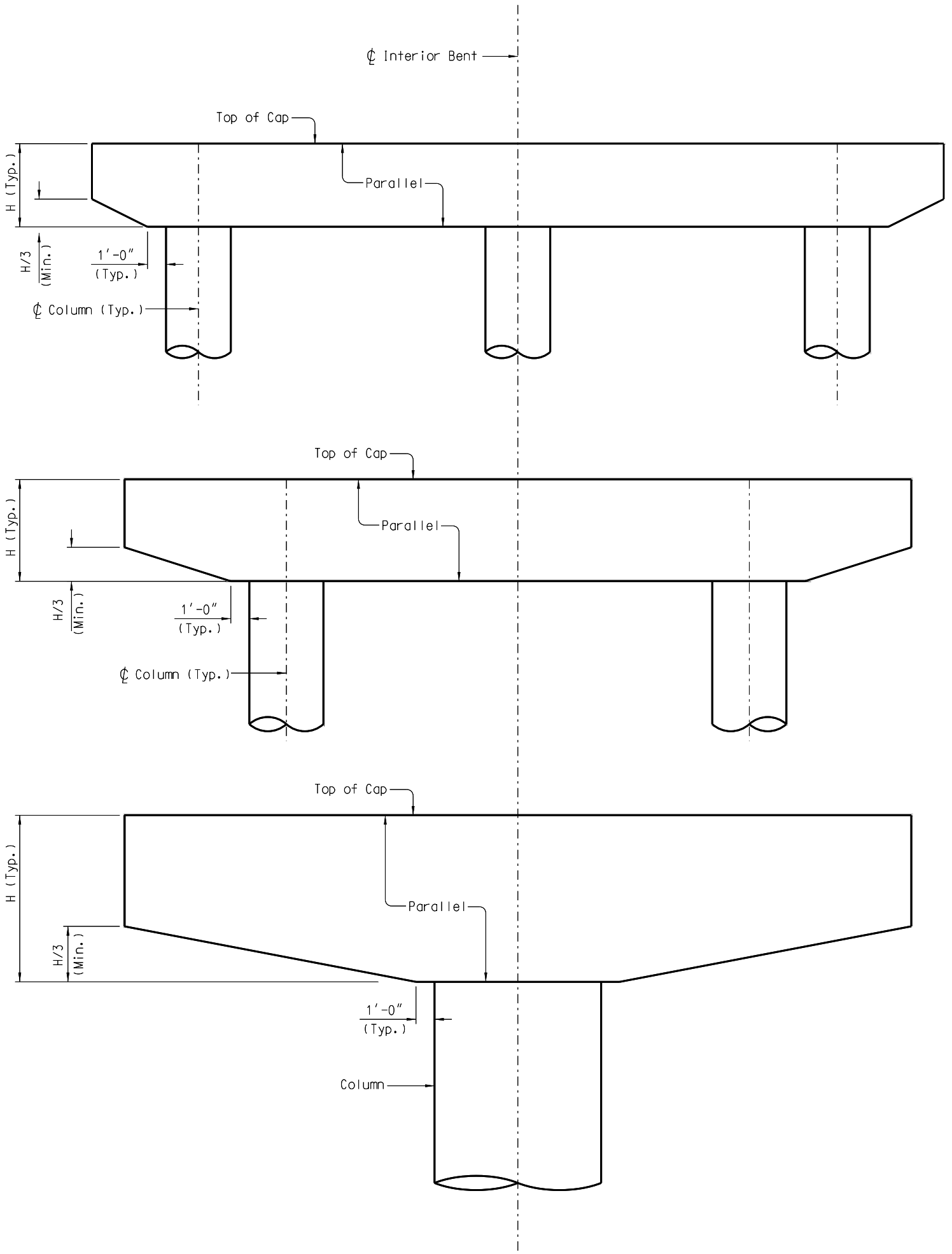


# INTERIOR BENT CAP OVERHANG DETAILS