Appendix E—Interchange Modification Report

This page intentionally left blank.

CAROLINA
CROSSROADS
I-20/26/126 Corridor Project

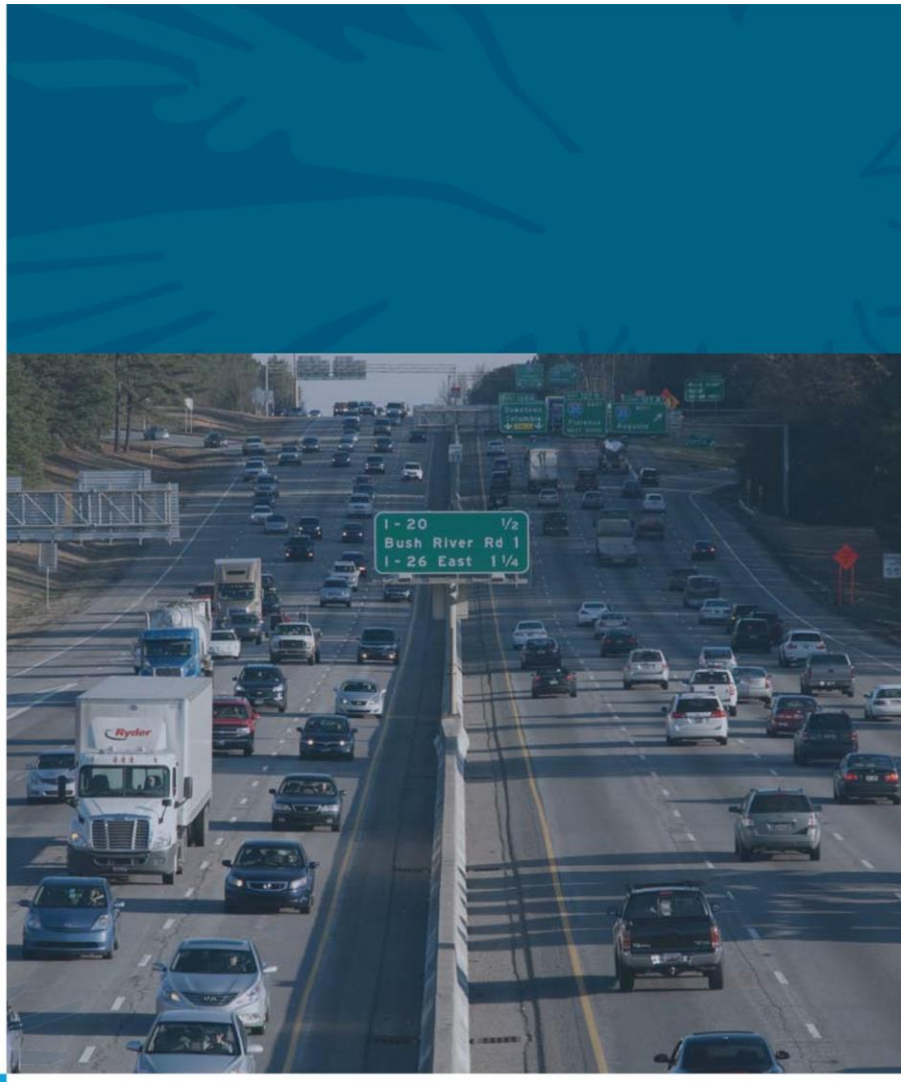

I-20/I-26/I-126 System Interchange Modification Report

Carolina Crossroads
I-20/I-26/I-126 Corridor Project
Lexington and Richland Counties, South Carolina

Final May 2019



SCDOT
South Carolina Department of Transportation

U.S. Department of Transportation
Federal Highway Administration

Prepared for South Carolina Department of Transportation
and the Federal Highway Administration

CAROLINA CROSSROADS

I-20/I-26/I-126 System Interchange Modification Report

Carolina Crossroads

I-20/I-26/I-126 Corridor Improvement Project

Lexington and Richland Counties, South Carolina

Final May 2019

Prepared for
South Carolina Department of Transportation,
and the Federal Highway Administration

Prepared by

STV 100 Years





SCDOT U.S. Department of Transportation Federal Highway Administration

Table of Contents

Executive Summary **1**

1 Introduction **4**

2 Background **5**

2.1 Existing Conditions 6

2.1.1 I-26 6

2.1.2 I-20 7

2.1.3 I-126 7

2.1.4 Interchanges 8

2.1.5 Frontage Road System 22

2.2 Purpose and Need 24

2.3 Conceptual Design 24

2.4 Interchange Modification Report Applicant 25

3 Study Area **27**

3.1 Demographics 27

3.2 Land Use 28

3.3 Transportation System 29

4 Methodology **30**

4.1 Scenarios Analyzed 30

4.2 Traffic Forecasts 31

4.3 Traffic Analysis 31

5 Traffic Volumes **35**

5.1 Existing Traffic Volumes 35

5.2 2040 Traffic Volumes 36

6 Traffic Operations **37**

6.1 TransModeler Network Analysis 37

6.2 Freeway Segment Analyses 38

6.3 Freeway Merge Area Analyses 45

6.4 Freeway Diverge Area Analyses 51

6.5 Intersection Capacity Analysis 57

7 Interchange Justification **78**

7.1 Policy Point 1 78

7.2 Policy Point 2 81

List of Tables

Table 3-1 – Population Demographic 27
Table 3-2 – Population Growth 28
Table 4-1 - Freeway Segment LOS Criteria 32
Table 4-2 - Weaving Segment LOS Criteria 33
Table 4-3 - Merge/Diverge LOS Criteria 33
Table 4-4 - Unsignalized Intersection LOS Criteria 34
Table 4-5 - Signalized Intersection LOS Criteria 34
Table 6-1 - I-26 Freeway Segment Capacity Analysis – Existing, 2040 No-Build, and 2040 Build RRPA 42
Table 6-2 - I-20 Freeway Segment Capacity Analysis – Existing and 2040 No-Build, and 2040 Build RRPA 43
Table 6-3 - I-126 Freeway Segment Capacity Analysis – Existing and 2040 No-Build, and 2040 Build RRPA 44
Table 6-4 - I-26 Ramp Merge Capacity Analysis – Existing and 2040 No-Build, and 2040 Build RRPA 48
Table 6-5 - I-20 Ramp Merge Capacity Analysis – Existing and 2040 No-Build, and 2040 Build RRPA 49
Table 6-6 - I-126 Ramp Merge Capacity Analysis – Existing and 2040 No-Build, and 2040 Build RRPA 50
Table 6-7 - I-26 Ramp Diverge Capacity Analysis – Existing and 2040 No-Build, and 2040 Build RRPA 54
Table 6-8 - I-20 Ramp Diverge Capacity Analysis – Existing and 2040 No-Build, and 2040 Build RRPA 55
Table 6-9 - I-126 Ramp Diverge Capacity Analysis – Existing and 2040 No-Build, and 2040 Build RRPA 56
Table 6-10 - Intersection Capacity Analysis Results - Existing Vs. 2040 No Build 59
Table 6-11 - Intersection Capacity Analysis Results – 2040 Build RRPA 67
Table 6-12 - 2040 Build RRPA Intersection Queue Lengths - Exit 106 68
Table 6-13 - 2040 Build RRPA Intersection Queue Lengths - Exit 110 69
Table 6-14 - 2040 Build RRPA Intersection Queue Lengths - Exit 63 70
Table 6-15 - 2040 Build RRPA Intersection Queue Lengths - Exit 65 71
Table 6-16 - 2040 Build RRPA Intersection Queue Lengths - Colonial Life Boulevard 72

List of Figures

Figure E-1 - IMR Study Area 3
Figure 1-1 - Carolina Crossroads Study Area 4
Figure 2-1 - I-20/I-26 System Interchange Existing Configuration 10
Figure 2-2 - I-26/I-126 System Interchange Existing Configuration 11
Figure 2-3 - Exit 106 Existing Configuration 14
Figure 2-4 - Exit 108 Existing Configuration 15
Figure 2-5 - Exit 110 Existing Configuration 16
Figure 2-6 - Exit 63 Existing Configuration 18
Figure 2-7 - Exit 65 Existing Configuration 19
Figure 2-8 - Colonial Life Boulevard Existing Configuration 21
Figure 2-9 - Refined Recommended Preferred Alternative 26

Figure 6-1 - Exit 106 - St. Andrews Road Intersection LOS Summary 60
Figure 6-2 - Exit 108 - Bush River Road Intersection LOS Summary 61
Figure 6-3 - Exit 110 - Sunset Boulevard (US 378) Intersection LOS Summary 62
Figure 6-4 - Exit 63 - Bush River Road Intersection LOS Summary 63
Figure 6-5 - Exit 65 - Broad River Road (US 176) Intersection LOS Summary 64
Figure 6-6 - Exit 106 - St. Andrews Road 2040 Build RRPA Configuration 73
Figure 6-7 - Exit 108 - Bush River Road 2040 Build RRPA Configuration 74
Figure 6-8 - Exit 63 - Bush River Road 2040 Build RRPA Configuration 75
Figure 6-9 - Exit 65 - Broad River Road 2040 Build RRPA Configuration 76
Figure 6-10 - Colonial Life Boulevard Interchange 2040 Build RRPA Configuration 77

Appendices

Appendix A—Existing Peak Hour Volumes

Appendix B—2040 Peak Hour Volumes

Appendix C— TransModeler Density Outputs

Appendix D—2040 Build Unconstrained Summary

Appendix E—TransModeler Intersection Analysis Outputs

Appendix F—Conceptual Signing Plans

Executive Summary

The South Carolina Department of Transportation (SCDOT) proposes multiple improvements to the I-20, I-26, and I-126 corridors within what is identified as the Carolina Crossroads study area. The limits of the Carolina Crossroads study area include approximately four miles of I-20 between the crossings over the Saluda River and Broad River, approximately nine miles of I-26 from Exit 101 (Broad River Rd) to Exit 110 (US 378), and approximately one mile of I-126 from I-26 to Colonial Life Boulevard.

The purpose of the proposed Carolina Crossroads project is to improve mobility, enhance traffic operations by reducing existing traffic congestion, accommodate future traffic needs, enhance safety throughout the corridor, improve freight mobility, and improve system linkages, while minimizing community and environmental impacts.

This interchange modification report (IMR) presents information for the proposed modification of the system interchanges of I-20/I-26 (I-20 Exit 64 and I-26 Exit 107) and I-26/I-126 (I-26 Exit 108) located in Lexington and Richland counties. The proposed modifications to the system interchanges will also affect closely spaced adjacent interchanges which are also to be modified. These interchanges include the I-26 Exit 106 (St Andrews Road), I-20 Exit 63 (Bush River Road), I-20 Exit 65 (Broad River Road) and the I-126 interchange at Colonial Life Boulevard.

As part of the project development, nine representative alternatives for the entire Carolina Crossroads study area were developed, along with a tenth 'no-build' alternative. From these alternatives, the Refined Recommended Preferred Alternative (RRPA) was identified. The I-20/I-26 and I-26/I-126 system interchanges and adjacent service interchanges in the RRPA are proposed to be modified as follows:

- I-20/I-26 System Interchange: the existing full cloverleaf interchange (I-20 Exit 64 and I-26 Exit 107) will be modified to a directional 'turbine' interchange. Multiple existing complex weaving movements will be eliminated from the mainline and relocated to collector-distributor roads which will be constructed in each direction on I-20 and I-26 to separate movements traveling between I-20 and I-26 from through traffic on the mainline travel lanes.
- I-26/I-126 System Interchange: the existing interchange (I-26 Exit 108), which includes ramps from I-26 to Bush River Road, will be modified to eliminate the ramps to Bush River Road, improve the continuity of I-26, and revise the connection to and from I-126.
- I-20 Exit 63 (Bush River Road): the existing diamond interchange, which includes a loop on-ramp from eastbound Bush River Road to eastbound I-20, will be modified to provide a diverging diamond interchange. This modification includes eliminating the intersection of Berryhill Drive with Bush River Road and adding an overpass to connect Berryhill Drive over I-20 to Bush River Road via Rockland Road.
- I-20 Exit 65 (Broad River Road): the existing diamond interchange at Broad River Road, which includes a short, two-way segment on the eastbound on-ramp to connect Garner Lane to Broad River Road, will be modified to provide a single point urban interchange. The Garner Lane connection to the off-ramp will be eliminated, making the interchange consistent with current standards and FHWA policy. A new connection will link Garner Road to Longcreek Drive.

- I-26 Exit 106 (St Andrews Road): the existing partial cloverleaf interchange includes a westbound loop off-ramp and eastbound loop on-ramp to and from westbound St Andrews Road. It will be modified to provide a single point urban interchange. The connections from the westbound off-ramp to eastbound St Andrews Road and to Burning Tree Drive will be maintained and adjusted to connect to the remainder of the modified interchange.
- I-26 Exit 110 (US 378): the existing single point urban interchange will remain unchanged; however, the eastbound off-ramp to US 378 will be relocated and extended by approximately 2,500 feet to reduce or eliminate the potential for off-ramp traffic queues from extending back to the eastbound I-26 mainline lanes.
- I-126 Colonial Life Boulevard: the existing partial interchange with ramps only oriented to and from downtown Columbia to the east will be replaced with a full access tight urban diamond interchange.

The portion of the RRPA evaluated in this IMR is shown in Figure E-1.

The analysis of the 2040 Build condition of the RRPA illustrates that the project would not have any significant negative impact on the safety and the operation of the facilities within the project area. The increased capacity provided by the RRPA will result in improved LOS over the 2040 No-Build conditions.

The I-20 Exit 61 (US 378) westbound off-ramp, outside of the project limits, may substantially affect the westbound mainline density and Exit 63 (Bush River Road) westbound merge operations due to high ramp volumes and congestion identified along US 378 at Exit 61.

Because of the distance between Exit 65 (Broad River Road) and Exit 68 (Monticello Road), the bridge crossing the Broad River creating a barrier, and the widening of I-20 ends east of the Broad River crossing, FHWA and SCDOT agreed that the Exit 68 interchange would not influence operations at Exit 65. However, with increased volumes and improved throughput within the system-to-system interchange, heavy queuing and ramp backup along I-20 eastbound was identified, due to the mainline capacity constraint that occurs at the eastern project limits as the proposed four lane section transitions into the existing three lane section at the bridge across Broad River just east of Exit 65.

The proposed interchange improvements at the system interchanges and the addition of the collector-distributor road systems along I-20 and I-26 should improve traffic operations and safety by removing the numerous existing vehicle conflict points and relocating merge/diverge areas and weaving sections within the study area from the mainline lanes to the collector-distributor lanes. By removing the Bush River Road ramps at Exit 108, the short weaving section between the ramp from eastbound I-20 to eastbound I-26 and the eastbound off-ramp to Exit 108 is eliminated. The congestion caused by the complex westbound weaving movements to travel to I-20 and to Exit 106 (St Andrews Road) after I-126 merges with I-26 is also eliminated.

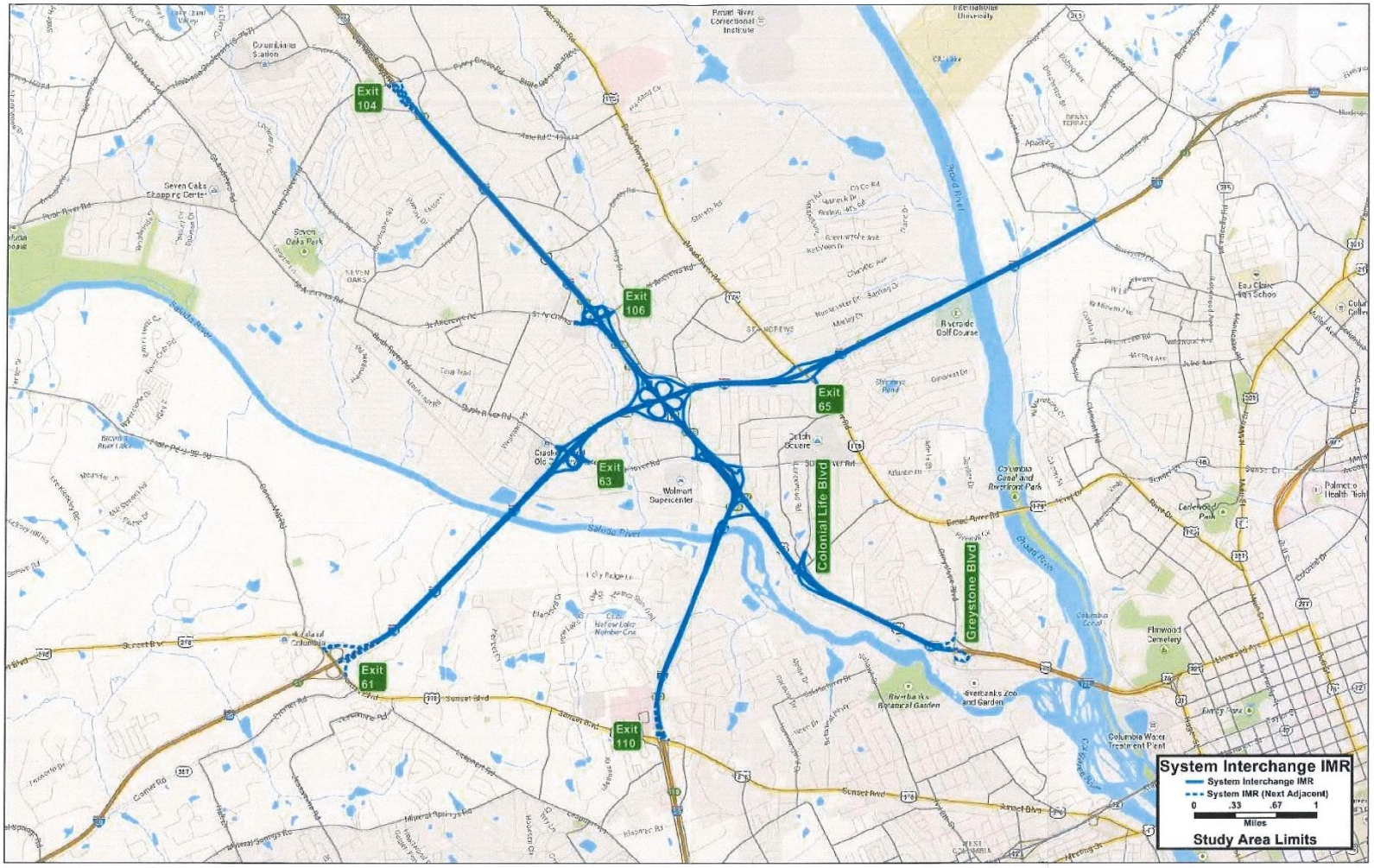

Figure E-1 - IMR Study Area

1 Introduction

STV, in cooperation with HDR and Mead & Hunt (the project team), has been contracted by the South Carolina Department of Transportation (SCDOT) to provide engineering services necessary for the preparation of an Environmental Impact Statement (EIS), right of way plans, and final construction plans for roadways and bridges for the proposed Carolina Crossroads I-20/I-26/I-126 Corridor Project.

I-20 is an east-west interstate highway that begins near Kent, Texas at I-10. From this origin, I-20 runs eastward through Texas, Mississippi, Alabama, Georgia and South Carolina where it ends at I-95 in Florence, South Carolina. I-26 is an east-west interstate highway that begins at the junction of U.S. Route 11W and U.S. Route 23 in Kingsport, Tennessee. From this origin, I-26 runs generally southeastward through Tennessee, North Carolina, and South Carolina, where it ends at U.S. Route 17 in Charleston, South Carolina. I-126 is an east-west auxiliary route of I-26 that begins and ends in Columbia, South Carolina.



Figure 1-1 - Carolina Crossroads Study Area

The proposed project is a transportation corridor improvement project located in Lexington and Richland counties. To date, the project area has been defined as a mainline corridor including I-20 from the Saluda River to the Broad River (approximately four miles), I-26 from Broad River Road to US-378 (approximately nine miles), and I-126 from I-26 to Colonial Life Boulevard (approximately one mile. **Figure 1.1** illustrates the extent of the Carolina Crossroads study area.

The I-20/I-26/I-126 corridor is a vital link in South Carolina, serving residents, commuters, travelers, and commerce. Due to nearby residential and commercial development, proximity to downtown Columbia, traffic volumes, and the overall geometric layout, including 12 interchange points, the I-20/I-26/I-126 corridor has become one of the most congested interstate sections in South Carolina. The purpose of the proposed project is to address this congestion and enhance safety throughout the corridor.

Information discussed in the report is derived from the following project reports: *Alternatives Traffic Analysis: Carolina Crossroads I-20/I-26/I-126 Corridor Project, Crash Analysis: Carolina Crossroads I-20/I-26/I-126 Corridor Project, Carolina Crossroads I-20/I-26/I-126 Corridor Improvement Project Draft Environmental Impact Statement (DEIS).*

The *Alternatives Traffic Analysis* study evaluated multiple improvements within the I-20/I-26/I-126 corridor designed to reduce existing traffic congestion, upgrade interchanges to meet design requirements, and accommodate future traffic needs. The study considered widening of I-20 from three to four lanes in each direction from about one mile west of Exit 63 (Bush River Road) to Broad River, widening of I-26 from three to four lanes in each direction from just west of Exit 101 (Broad River Road) to Exit 110 (US 378), and realigning the connection to I-126 from I-26 towards the Colonial Life Boulevard interchange. In addition, the study examined modifications to the I-20/I-26/I-126 system interchange, Exit 101 (Broad River Road), Exit 102 (Lake Murray Boulevard), Exit 103 (Harbison Boulevard), Exit 104 (Piney Grove Road), Exit 106 (St. Andrews Road), Exit 108 (Bush River Road), Exit 110 (US 378), Exit 63 (Bush River Road), Exit 65 (Broad River Road), and the Colonial Life Boulevard interchange on I-126.

2 Background

The Carolina Crossroads Project includes three interstate routes and incorporates the modification of the I-20/I-26 system interchange (Exit 64/Exit 107) and the I-26/I-126 system interchange (Exit 108). Several immediately adjacent service interchanges are expected to be modified as well. Due to the close proximity and interconnected movements of the service interchanges with the system interchanges, the modification of all the interchanges are to be evaluated collectively. The modified interchanges to be evaluated in this IMR include:

- Exit 106: I-26 at St. Andrews Road (S-32-36/S-40-42)
- Exit 64/Exit 107: I-26 at I-20
- Exit 108: I-26 at Bush River Road (S-40-31);
- Exit 108: I-126 at I-26
- Exit 63: I-20 at Bush River Road (S-32-273)
- Exit 65: I-20 at Broad River Road (US 176)
- I-126 at Colonial Life Boulevard (S-40-2963)

To address Federal Highway Administration (FHWA) requirements, adjacent interchanges analyzed as part of this IMR include the following:

- Exit 104: I-26 at Piney Grove Road (S-32-671)
- Exit 110: I-26 at US 378 (Sunset Boulevard)
- Exit 61: I-20 at US 378 (Sunset Boulevard)
- I-126 at Greystone Boulevard (S-40-3020)

The interchange at Exit 68 (I-20 at Monticello Road/SC 215) is the interchange adjacent to Exit 65 (I-20 at Broad River Road). However, FHWA has provided concurrence that this interchange will be excluded from consideration in this IMR since its distance from the Exit 64 system interchange (approximately three miles) and

the barrier created by the bridge crossing the Broad River effectively limits its influence on the subject interchange operations.[1]

This report focuses on traffic analysis of existing, future no-build, and future build conditions. The traffic conditions were analyzed for the following scenarios:

- Existing Conditions: An analysis of existing conditions in the year 2015
- 2040 No-Build: An analysis of conditions in the year 2040 with no changes to the interstate or interchanges.
- 2040 Build: An analysis of conditions in the year 2040 with modifications to the study area interstate and interchanges.

2.1 Existing Conditions

2.1.1 I-26

Eastbound I-26 approaches the study area from the northwest, entering from Richland County as a two lane section with a posted 70 miles per hour (mph) speed limit. Approximately 1,900 feet in advance of the off-ramp to Exit 101 (Broad River Road), the speed limit is reduced to 60 mph. Approximately 850 feet in advance of the Exit 101 off-ramp, I-26 begins to transition to provide a third lane, which is fully established approximately 525 feet in advance of the off-ramp. Immediately south of Exit 103 (Harbison Boulevard), I-26 crosses into Lexington County. Approximately 2,000 feet in advance of Exit 106 (St Andrews Road), the speed limit is reduced to 55 mph.

At Exit 106 (St Andrews Road), two lanes are added. The first additional lane is a continuation of the loop on-ramp from westbound St Andrews Road, while the second lane is a continuation of the on-ramp from eastbound St Andrews Road. This fifth lane drops at the off-ramp to westbound I-20, with the four lane section traversing the I-20 system interchange (Exit 107). At the I-20 system interchange, I-26 crosses back into Richland County for a short distance. The four lanes approach the I-126 split, where the left two lanes continue eastbound on I-126 towards downtown Columbia, a "decision lane" continues to either I-126 or I-26, and the right lane continuing eastbound on I-26. There is a 50 mph posted advisory speed on the I-26 curve at this split.

I-26 continues eastbound on two lanes crossing back into Lexington County at the Saluda River, where a lane is added from the ramp from westbound I-126. The speed limit increases to 60 mph in this area. I-26 continues on three lanes past Exit 110 (US 378) and exits the study area south of that interchange.

Westbound I-26 enters the study area in Lexington County south of Exit 110 (US 378) as a three lane section with a posted 60 mph speed limit. The two lane westbound on-ramp from Exit 110 merges and adds a fourth westbound lane. Approaching the bridge over the Saluda River, the posted speed limit on I-26 is reduced to 55 mph, with the left two lanes designated to continue as I-26 towards Spartanburg and the right two lanes exiting to Bush River Road and I-126 towards Columbia at Exit 108.

[1] Memo from SCDOT to FHWA, June 1, 2018

As it crosses the Saluda River, I-26 enters Richland County and crosses over I-126 as it curves to the northwest with an advisory speed limit of 50 mph. These two lanes are joined to their left by two westbound lanes continuing from I-126 into I-26, and to their right by a single lane ramp that combines a lane from I-126 and directs traffic to I-20 with the on-ramp from Bush River Road (Exit 108), creating a five-lane section. This five lane section continues for approximately 1,100 feet until the right lane drops on the off-ramp to eastbound I-20. I-26 continues as a four lane section through the system interchange with I-20 (Exit 107), where it exits Richland County and re-enters Lexington County.

The on-ramp from westbound I-20 adds a fifth lane to I-26, creating a weaving section approximately 1,300 feet long before the fifth lane drops at Exit 106 (St Andrews Road) as an exit ramp taking traffic to eastbound St Andrews Road. After crossing under the St Andrews Road overpass, the fourth lane drops at the loop off-ramp to westbound St. Andrews Road. From here, I-26 continues westbound as a three lane section. The posted speed increases to 60 mph approximately 2,200 feet north of the Exit 106 westbound on-ramp. I-26 re-enters Richland County just south of the Harbison Boulevard overpass at Exit 103 and continues west as a three lane, 60 mph section to the west of Exit 101 (Broad River Road). About 550 feet west of the Exit 101 on-ramp, the inside lane begins its merge to create a two-lane section, which begins approximately 1,050 feet to the west. I-26 westbound exits the study area as a two-lane section, transitioning to a 70-mph posted speed limit at a point approximately 2,700 feet west of the Exit 101 on-ramp.

2.1.2 I-20

Eastbound I-20 approaches the study area from the west. Entering the study area in Lexington County at its crossing of the Saluda River, I-20 eastbound provides three lanes with a posted 60 mph speed limit. At Exit 63 (Bush River Road), the loop on-ramp from southbound Bush River Road adds a fourth lane, which is dropped approximately 2,650 feet to the east at the off-ramp to eastbound I-26. I-20 continues east with three lanes through the I-26 system interchange (Exit 64) where it enters Richland County, and past Exit 65 (Broad River Road). It exits to the east of study area at the bridge over the Broad River with three lanes and a 60 mph posted speed limit.

Westbound I-20 approaches the study area from the east. Entering the study area in Richland County at its crossing of the Broad River, I-20 westbound provides three lanes with a posted 60 mph speed limit. I-20 continues west with three lanes through the I-26 system interchange (Exit 64), where a fourth lane is added from the on-ramp from eastbound I-26. This four lane section continues for approximately 1,100 feet before it drops at the off-ramp to Exit 63 (Bush River Road). I-20 continues as a three lane, 60 mph section to the west where it leaves the study area at the bridge over the Saluda River.

2.1.3 I-126

Eastbound I-126 begins where I-26 splits to continue to the east towards downtown Columbia and towards Charleston. Of the four eastbound lanes approaching this system interchange, the two left lanes continue through as I-126, while the third lane from the inside is a “decision” lane where traffic may continue on I-126 or on I-26. I-126 continues eastbound towards downtown Columbia as a three lane, 60 mph section. Approximately 1.25 miles from its separation from I-26, the on-ramp from Colonial Life Boulevard adds a fourth

lane to the south. I-126 continues as a four lane section to its terminus, where the left two lanes become eastbound Elmwood Avenue and the right two lanes become southbound Huger Street, with the speed limit dropping to 35 mph approximately 800 feet in advance of the split.

Westbound I-126 begins where westbound Elmwood Avenue and northbound Huger Street merge just east of the bridge over the Broad River to create a four lane section with a posted 60 mph speed limit. I-126 continues westbound past the Greystone Boulevard interchange and the off-ramp to Colonial Life Boulevard. Approximately 2,000 feet north of the Colonial Life Boulevard exit, the right lane of I-126 drops as a flyover exit ramp to eastbound I-26. I-126 continues westbound for about 2,000 feet, where the left two lanes continue through to become the inside two lanes of westbound I-26, and the right lane bends right as a ramp directing traffic to eastbound and westbound I-20. Between these split lanes, two lanes from westbound I-26 enter from the curved flyover to create a five lane section of I-26.

2.1.4 INTERCHANGES

There are two system and eleven service interchanges within the study area. The system interchanges are at the junction of I-26 and I-20 (Exit 107 on I-26 and Exit 64 on I-20) and at the junction of I-26 and I-126 (Exit 108). There are seven service interchanges along I-26 (Exits 101, 102, 103, 104, 106, 108, and 110), two along I-20 (Exits 63 and 65) and two on I-126 (Colonial Life Boulevard and Greystone Boulevard).

2.1.4.1 System Interchanges

There are two system interchanges located within the study area. The I-20/I-26 system interchange is numbered as I-20 Exit 64 and I-26 Exit 107. Exit 108 combines elements of the I-26/I-126 system interchange with a service interchange providing for movements to/from Bush River Road.

I-20/I-26 System Interchange - Exit 64/Exit 107

The I-20/I-26 System interchange is a full access cloverleaf interchange. The cloverleaf interchange introduces short weaving sections between the two loop ramps located in each direction on I-20 and I-26. The spacing of the system interchange to the next adjacent interchanges is short. The distance between the weaving gore areas on Exit 107 and Exit 106 is about 1,500 feet. The weaving section distance between the Exit 107 and Exit 108 ramps is about 800 feet in the eastbound direction and about 1,200 feet in the westbound direction. The distance between Exit 63 and Exit 64 ramps is 1,500 feet in the eastbound direction and about 1,100 feet of weaving section in the westbound direction. The distance between Exit 64 and Exit 65 ramps are slightly longer at about 2,600 feet in the eastbound direction and about 2,000 feet in the westbound direction. The interchange configuration, its close spacing to the adjacent interchanges and the numerous complex weaving movements introduced in this area increase vehicle conflicts that can reduce safety and contribute to congestion in the corridor during peak periods. The existing configuration of the Exit 64/Exit 107 system interchange is shown in **Figure 2.1**.

I-26/I-126 System Interchange – Exit 108

The I-26/I-126 interchange provides full access movements between the two interstate routes and includes a flyover ramp from westbound I-126 to eastbound I-26. Westbound I-26 also travels on a flyover ramp prior to its merge with westbound I-126.

Exit 108 also provides full access to/from I-26 to Bush River Road.

The existing configuration of the I-26/I-126 interchange is shown in **Figure 2.2**.

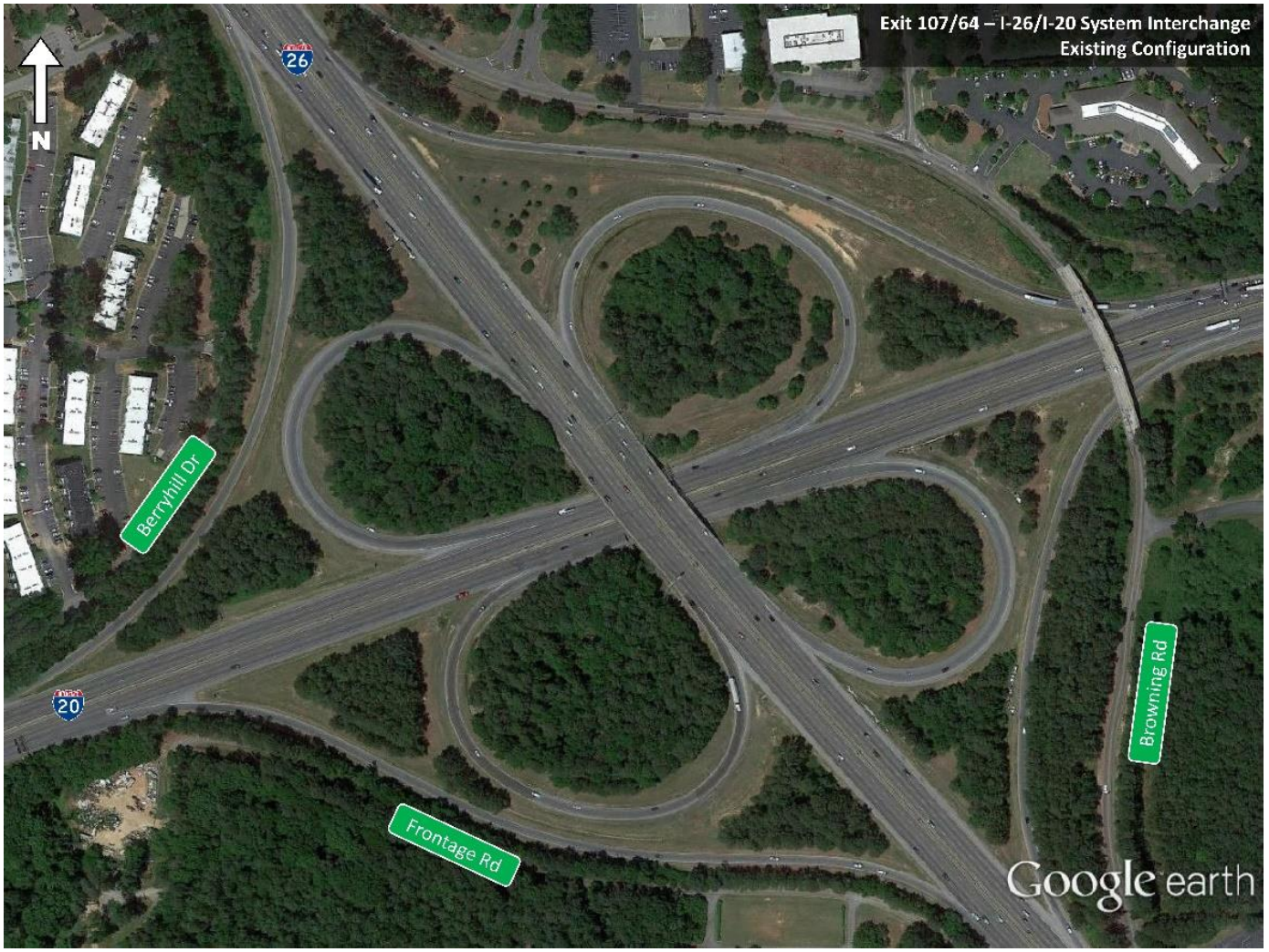

Figure 2-1 - I-20/I-26 System Interchange Existing Configuration

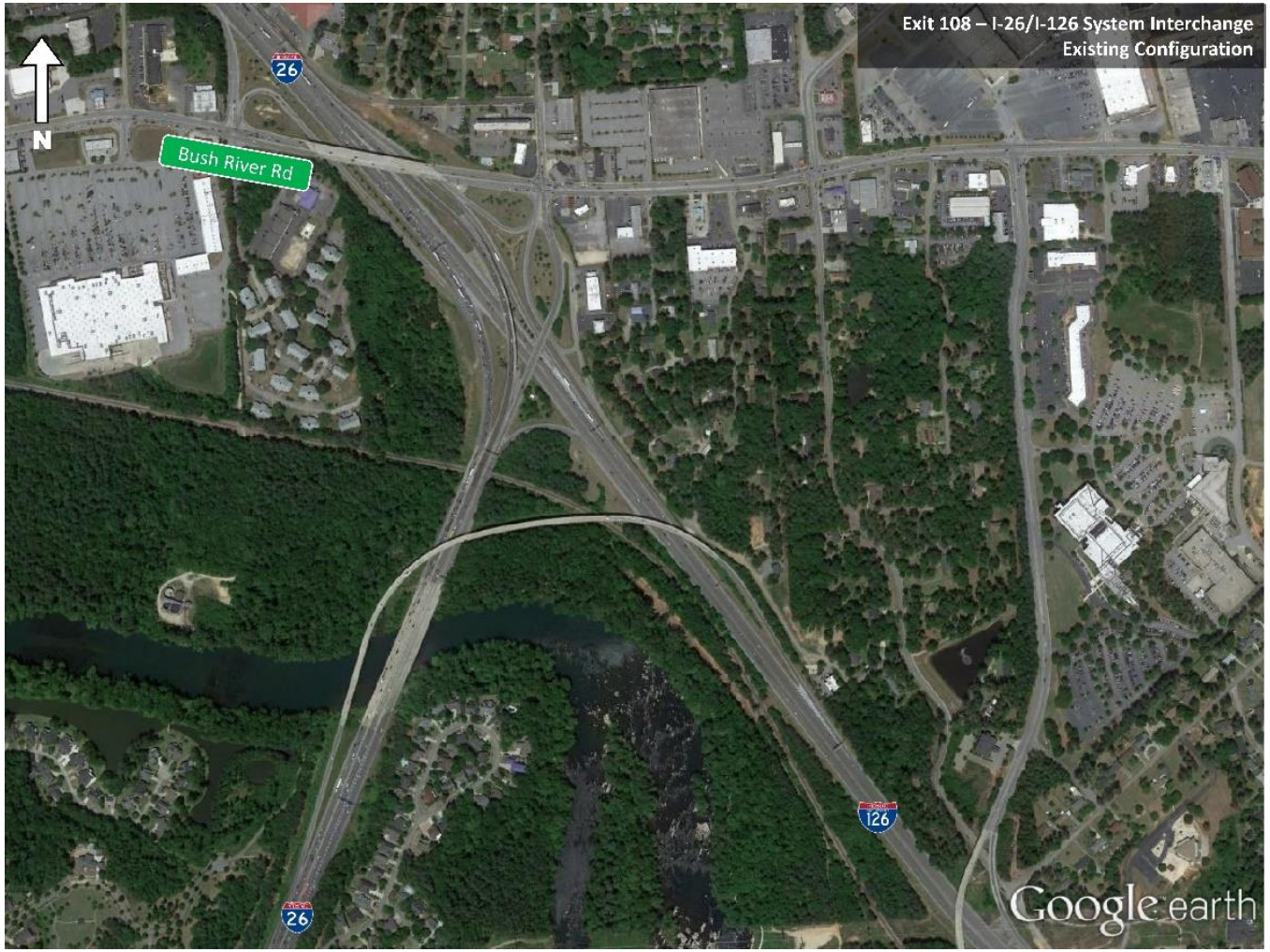

Figure 2-2 - I-26/I-126 System Interchange Existing Configuration

2.1.4.2 I-26 Service Interchanges

Of the seven I-26 service interchanges within the Carolina Crossroads study area, three I-26 service interchanges are located within the I-20/I-26/I-126 IMR study area. Two of these interchanges, Exits 106 and 110, are separate, full access interchanges. Exit 108 combines elements of the I-26/I-126 system interchange with a service interchange providing for movements to/from Bush River Road.

Exit 106 – St. Andrews Road (S-32-36/S-40-42)

Exit 106 is a partial cloverleaf interchange with loop ramps located on the northeast and northwest quadrants. The two westbound off-ramps to eastbound and westbound St. Andrews Road are lane drops from westbound I-26. The two eastbound on-ramps from westbound and eastbound St. Andrews Road are lane additions to eastbound I-26. The westbound on-ramp carries traffic from eastbound and westbound St. Andrews Road with an acceleration lane of about 1,500 feet. A traffic signal controls the eastbound off-ramp intersection with St. Andrews Road. Woodland Hills Road is aligned opposite the eastbound off-ramp at this intersection.

The westbound off-ramp to eastbound St. Andrews Road is divided into two movements. The first ramp movement connects to Burning Tree Road. At the stop sign controlled intersection with Burning Tree Road, right turning traffic can travel east on Burning Tree Road. Traffic that is intending to access Fernandina Road is supposed to use this ramp, turn left onto Burning Tree Road and cross St. Andrews Road. The second ramp is intended primarily for traffic that is traveling east on St. Andrews Road through its intersection with Fernandina Road/Burning Tree Road.

In reality, traffic traveling to Fernandina Road tends to bypass the first ramp movement to Burning Tree Road, travels to the end of the ramp and attempts to cross two lanes of eastbound St. Andrews Road to enter the left turn lane to Fernandina Road, which extends back to where the off-ramp intersects St. Andrews Road.

The existing configuration of Exit 106 is shown in **Figure 2.3**.

Exit 108 – Bush River Road (S-40-31)

The service interchange portion of Exit 108 is mixed in with the system interchange between I-26 and I-126. The service interchange to Bush River Road provides full access between that arterial and I-26. The off-ramps to Bush River Road are both lane drops. The eastbound off-ramp is a lane drop at the end of an approximately 720 feet long weaving section created by the Exit 107 on-ramp from eastbound I-20 to eastbound I-26. The westbound off-ramp drops from westbound I-26 along with the westbound off-ramp to eastbound I-126. The westbound off-ramp to Bush River Road is intersected by Morninghill Drive prior to its intersection with Bush River Road.

The loop on-ramp from Bush River Road to eastbound I-26 includes a long ramp section, approximately 1,400 feet long, that runs parallel to I-26 prior to merging into it. The westbound on-ramp traffic from Bush River Road is mixed with traffic traveling on the approximately 1,525 feet long ramp lane created by the rightmost lane of westbound I-126 that runs parallel to and on the eastside of westbound I-126 and I-26. Both ramp intersections at Bush River Road are controlled by traffic signals.

No direct access is provided from Bush River Road to I-126 within this interchange. Traffic traveling to/from Bush River Road to I-126 must use the Colonial Life Boulevard interchange on I-126.

The existing configuration of Exit 108 is shown in **Figure 2.4**.

Exit 110 – Sunset Boulevard (US 378)

Exit 110 is a single point urban interchange (SPUI). A regional hospital is located in the northwest quadrant of the interchange. The left turn movements to and from the ramps at this interchange are controlled by a traffic signal. The off-ramp right turn movements are controlled by stop signs. This configuration, combined with closely spaced signalized intersections and heavy traffic on Sunset Boulevard, frequently results in traffic queuing back on the off-ramps during peak period congestion. These off-ramp queues can extend back onto the I-26 mainline.

The existing configuration of Exit 110 is shown in **Figure 2.5**.



Figure 2-3 - Exit 106 Existing Configuration



Figure 2-4 - Exit 108 Existing Configuration

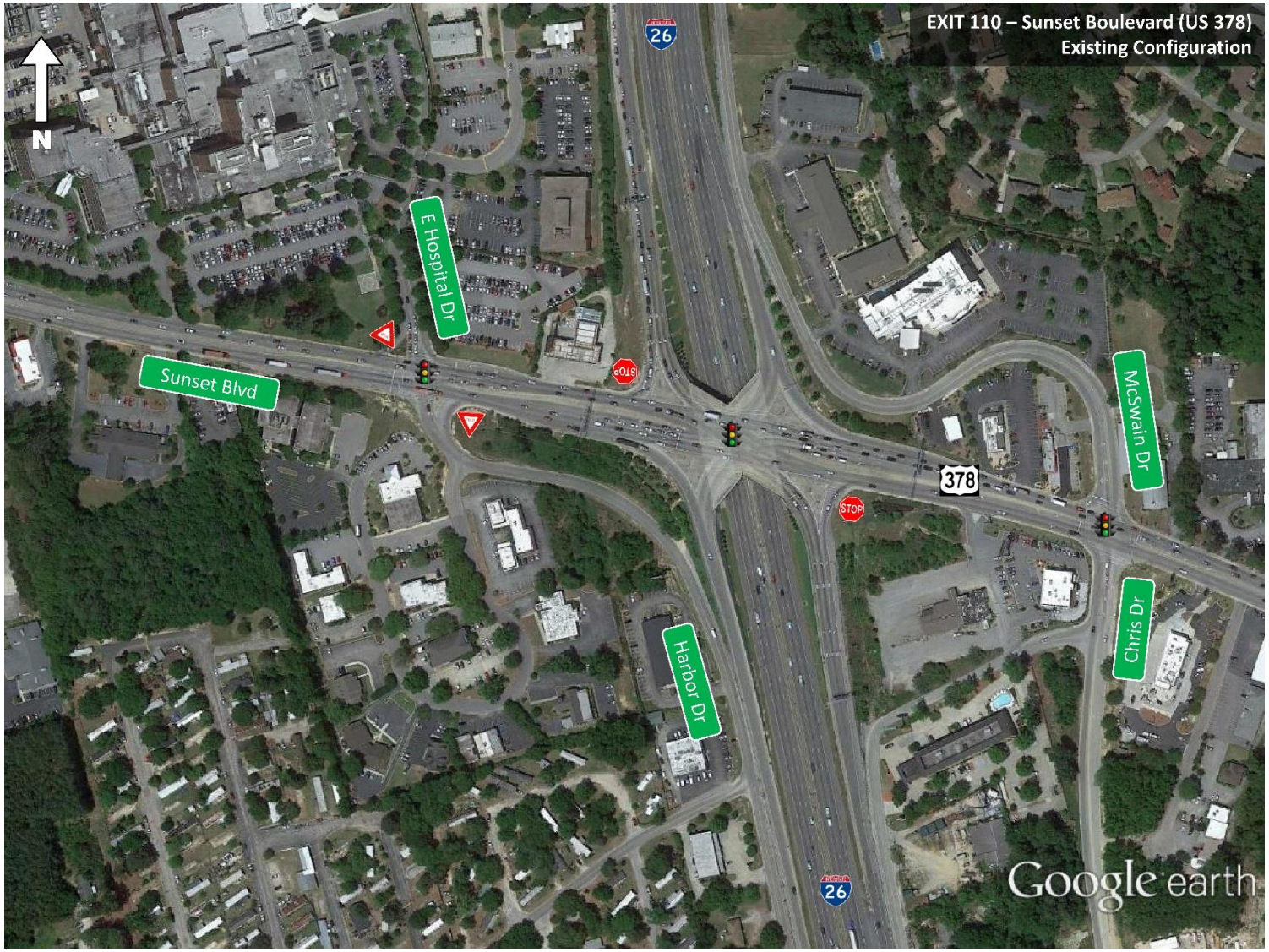

Figure 2-5 - Exit 110 Existing Configuration

2.1.4.3 I-20 Interchanges

There are two service interchanges located within the study area along I-20.

Exit 63 – Bush River Road (S-32-273)

Exit 63 is a modified diamond interchange that includes on-ramps to access eastbound I-20, including a loop ramp in the southeast quadrant. These movements operate without traffic control. The westbound ramps and the eastbound off-ramp intersections along Bush River Road are controlled by traffic signals.

The eastbound loop on-ramp adds a lane onto eastbound I-20. This lane continues eastbound, with the eastbound on-ramp carrying traffic from westbound Bush River Road merging into it before it is dropped at the ramp to eastbound I-26 at Exit 64.

The existing configuration is of Exit 63 is shown in **Figure 2.6**.

Exit 65 – Broad River Road (US 176)

Exit 65 is a diamond interchange. The westbound off-ramp has a two stage, two lane diverge movement, with the initial single lane off ramp forming a two-lane off-ramp to Broad River Road. The first portion of the eastbound on-ramp from Broad River Road, is a two-way, two lane roadway approximately 380 feet long that connects to Garner Lane. Garner Lane is a two lane local roadway with a posted 35 mph speed limit. East of its intersection with Garner Lane, the eastbound on-ramp becomes a one-way ramp that enters eastbound I-20. Traffic from Garner Lane can turn right at its intersection with the on-ramp to enter eastbound I-20. The ramp intersections with Broad River Road are controlled by traffic signals.

The existing configuration of Exit 63 is shown in **Figure 2.7**.



Figure 2-6 - Exit 63 Existing Configuration



Figure 2-7 - Exit 65 Existing Configuration

2.1.4.4 I-126 Interchanges

There is one service interchange located within the study area along I-126. The interchanges along I-126 do not have exit numbers based on the mile marker locations; they are described based on the name of the arterial to which they connect.

Colonial Life Boulevard (S-40-8970)

The Colonial Life Boulevard interchange is a partial interchange, only providing access to and from downtown Columbia via an on-ramp to eastbound I-126 and an off-ramp from westbound I-126. The Colonial Life Boulevard interchange ramps become Colonial Life Boulevard W, which ends at its intersection with Bush River Road.

The existing interchange configuration of Colonial Life Boulevard is shown in **Figure 2.8**.



Figure 2-8 **- Colonial Life Boulevard Existing Configuration**

2.1.5 FRONTAGE ROAD SYSTEM

An extensive system of Frontage Roads are present adjacent to I-26, I-20, and I-126 within the study area. These frontage roads provide alternatives for local traffic to avoid using interstates for short distance and/or local trips, and can be used to relieve congested interstate traffic during normal congestion or incidents.

2.1.5.1 I-26 Frontage Roads

Extensive frontage roads are present on both sides of I-26 between Exit 101 (Broad River Road) and Exit 110 (US 378). The frontage road network parallel to I-26 does not extend between Exit 108 (Bush River Road) and Exit 110 (US 378) due to the need to cross the Saluda River. For the IMR, the frontage roads adjacent to the Exit 107 system interchange with I-20, and accessible via the existing adjacent interchanges at Exit 106, Exit 108 and Exit 110 are summarized as follows.

Jamil Road (S-32-1791)

Jamil Road begins at Piney Grove Road opposite Bower Parkway. Jamil Road continues to run generally parallel to eastbound I-26 to its terminus at Saint Andrews Road approximately 815 feet west of the eastbound off-ramp at Exit 106 (St Andrews Road).

Fernandina Road (S-32-1842/1925, S-40-2893/3021/3045)

Fernandina Road begins at its intersection with Woodcross Drive near Exit 103 (Harbison Boulevard). Woodcross Drive begins opposite the westbound loop off-ramp at Exit 103. Fernandina Road runs generally parallel to the westbound lanes of I-26 and intersects Piney Grove Road approximately 800 feet east of the westbound ramp intersection at Exit 104.

Fernandina Road continues south of Piney Grove Road to its terminus at its intersection with St Andrews Road approximately 275 feet east of the westbound ramp intersection at Exit 106.

Berryhill Drive (S-32-1551)

Berryhill Drive begins at its intersection with Woodland Hills Road approximately 100 feet south of St. Andrews Road. Woodland Hills Road begins opposite the eastbound off-ramp to Exit 106. Berryhill Drive runs parallel to the eastbound lanes of I-26 and curves to the west at Exit 107. At this point, it runs generally parallel to the westbound lanes of I-20 to its intersection at Bush River Road. The intersection with Bush River Road is located approximately 300 feet west of the Exit 63 westbound ramp intersection of I-20.

Burning Tree Drive (S-32-1841/S-40-2893)/Browning Road (S-40-2892)

Burning Tree Drive begins at St. Andrews Road opposite Fernandina Road. Burning Tree Drive runs generally parallel to westbound I-26 towards Exit 107. At Center Point Road, Burning Tree Drive becomes Browning Road. Browning Road continues towards the south, crossing over I-20 and continuing parallel to the westbound lanes of I-26. As it approaches Bush River Road, Browning Road curves to the east and intersects Morninghill Drive approximately 450 feet north of the intersection of Morninghill Drive and Bush River Road. Morninghill Drive intersects Bush River Road opposite the intersection of the westbound ramps from I-26.

McSwain Drive (S-32-1814)

McSwain Drive is a frontage road that begins at Sunset Boulevard approximately 830 feet east of the SPUI interchange at Exit 110. McSwain Drive runs parallel to westbound I-26 but does not provide a connection to other frontage roads. It ends in a residential area south of the Saluda River.

2.1.5.2 I-20 Frontage Roads

There are limited frontage roads located along I-20 within the study area.

Berryhill Drive (S-32-1551)

As mentioned in the I-26 Frontage Road section, Berryhill Drive runs parallel to the westbound lanes of I-20 after it bends west from I-26. It ends at its intersection with Bush River Road approximately 300 feet west of the Exit 63 westbound ramp intersection of Bush River Road and I-20.

Garner Lane (S-40-2906)

Garner Lane is a frontage road that begins at about 380 feet from Broad River Road at its intersection with the Exit 65 eastbound on-ramp. Garner Lane runs parallel to eastbound I-20, but does not provide any other connection to other frontage roads in the study area.

2.1.5.3 I-126 Frontage Roads

There is extensive frontage road coverage along I-126 within the study area. Most of the coverage occurs east of I-126 with frontage roads running parallel to I-126 between Bush River Road and Greystone Boulevard.

Frontage Road (S-40-2891)/Lawand Drive (S-40-1019)

A frontage road begins at the I-26 westbound on-ramp from Bush River Road at Exit 108. This frontage road is a one-way pair running away from Bush River Road, becoming a two-way frontage road about 1,050 feet south of Bush River Road. The frontage road intersects and continues as Lawand Drive to its terminus at Arrowwood Road.

Arrowwood Road (S-40-287)

Arrowwood Road begins at Bush River Road and runs towards the south. At its intersection with Lawand Drive, Arrowwood Road acts as a frontage road for approximately 1,400 feet to its intersection with Gracern Road. At this intersection, Arrowwood Road turns to the east and continues to its terminus with Broad River Road.

Gracern Road (S-40-2890)

Gracern Road begins at Arrowwood Road and runs towards the south along the westbound side of I-126 towards the Greystone Boulevard interchange. Gracern Road continues approximately 1,600 feet past its intersection with Stoneridge Drive, where is bends to the north away from I-126 and terminates at Stoneridge Drive.

2.2 Purpose and Need

The primary purpose of the proposed Carolina Crossroads project is to implement a transportation solution(s) that would improve mobility and enhance traffic operations by reducing existing traffic congestion within the I-20/I-26/I-126 corridor while accommodating future traffic needs. Secondary purposes of the proposed Carolina Crossroads project are to enhance safety throughout the corridor, improve freight mobility, and improve system linkages, while minimizing community and environmental impacts.

The needs for this project were identified through a comprehensive review of previous studies along with the analysis of current data compiled for this study. This includes information in the Traffic Technical Memo and the Accident Analysis Report, as well as that collected through meetings with SCDOT; federal, state and local agencies; project stakeholders, and the public.

2.3 Conceptual Design

As described in the March 2018 *Alternatives Traffic Analysis*, analyses evaluating 2040 Build conditions for the interchanges and adjacent intersections for ten representative alternatives were completed for Level 1B screening as part of the environmental process. Through the screening process, four reasonable alternatives were progressed to Level 3 screening:

- Reasonable Alternative 1 (RA1) replaces Exit 64/Exit 107 with a Turbine Interchange, Exit 106 (St Andrews Road) with a Single Point Urban Interchange (SPUI), Exit 63 (Bush River Road) with a Diverging Diamond Interchange (DDI), Exit 65 (Broad River Road) with a SPUI, and removes access to Bush River Road at Exit 108. Colonial Life Boulevard interchange is reconfigured to a full interchange to provide access to Bush River Road from direction of I-126.
- Reasonable Alternative 5 (RA5) replaces Exit 64/Exit 107 with a Directional Interchange with 2 loops, Exit 106 with a SPUI, Exit 63 with a Partial Cloverleaf Interchange, Exit 65 with a SPUI, and removes access to Bush River Road at Exit 108. Colonial Life Boulevard interchange is reconfigured to a full interchange to provide access to Bush River Road from direction of I-126
- Reasonable Alternative 1 Modified (RA1M) is similar to RA1 with the exception of Exit 63 which is replaced with a Partial Cloverleaf Interchange.
- Reasonable Alternative 5 Modified (RA5M) is similar to RA5 with the exception of Exit 63 which is replaced with a DDI.

As documented in the DEIS, RA1 was chosen as the Refined Recommended Preferred Alternative (RRPA) and is depicted in **Figure 2-9**.

2.4 Interchange Modification Report Applicant

The interchange policy is administered by the Federal Highway Administration (FHWA). Therefore, FHWA is required to approve all new access or changes in access points pursuant to this policy.

As the owner and operator of the Interstate System, SCDOT is responsible for submitting a formal request to the FHWA in the form of an IMR that documents the analysis, the rationale for the proposed change in access, and the recommended action.

SCDOT is the sponsoring agency for the Carolina Crossroads project. The contact information for the Carolina Crossroads IMR study is provided below:

Brian Klauk, P.E.
Project Manager for Carolina Crossroads
SC Department of Transportation
955 Park St., Columbia, SC 29201

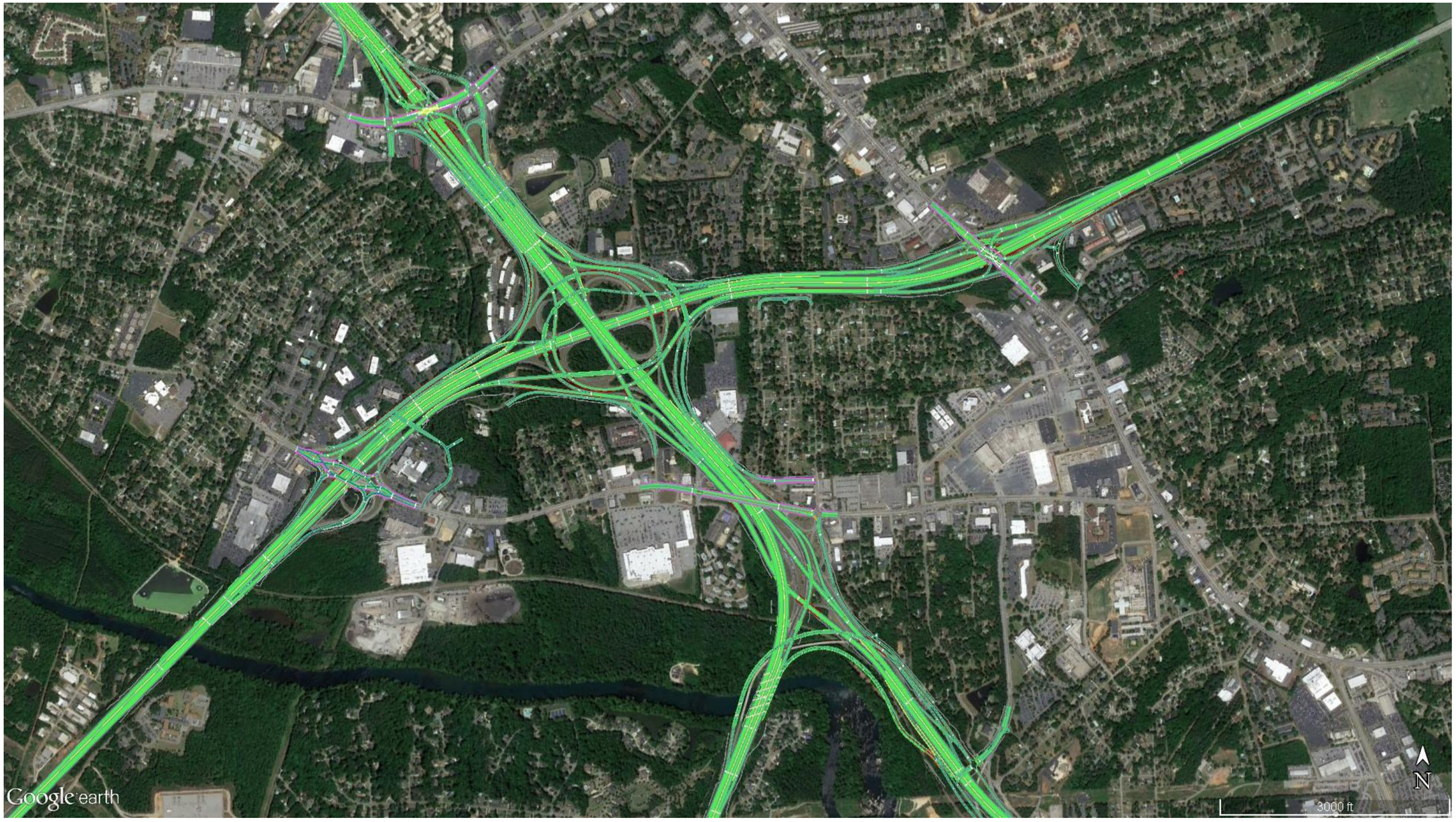

Figure 2-9 - Refined Recommended Preferred Alternative

3 Study Area

The proposed project is a transportation corridor improvement project located in Lexington and Richland counties. The project study area has been defined as a mainline corridor including I-20 from the Saluda River to the Broad River (approximately four miles), I-26 from Broad River Road to US-378 (approximately nine miles), and I-126 from I-26 to Colonial Life Boulevard (approximately one mile). **Figure 1.1** illustrates the extent of the Carolina Crossroads study area.

3.1 Demographics

According the the 2010 United State Census Bureau, Lexington County has approximately 262,500 residents and Richland County has approximately 384,500 residents. The counties have seen a steady increase in population since the 1950's. Between 2000 to 2010, Lexington County saw a 17.7% increase in population and Richland County saw a 16.6% increase in population. Select demographics including race, age, poverty and growth percentages of Lexington County and Richland County compared to the state of South Carolina are provided in **Table 3.1.**

Table 3-1 – Population Demographic

Characteristic	Population Demographic		
	South Carolina	Lexington County	Richland County
Minority Population	35.9%	23.3%	55.1%
Percent age 65 and over	14.2%	12.8%	32.5%
Percent income below poverty level	17.7%	23.1%	27.9%
Percent change in population (2000-2010)	15.3%	17.7%	16.6%

Source: U.S. Census Bureau, 2010 Demographic Profile and American Community Survey 5-year Estimates (2009-2013) Tract and Block Group data

Comparisons of the data indicate the percentage minority population in Lexington County (23.3%) is below the reported State percentage (35.9%) while the percentage minority population in Richland County (55.1%) is higher. The Lexington County population age 65 and older is slightly lower when comparing to the State percentage while the Richland County population age 65 and older percentage is more than double compared to the State percentage.

According to the South Carolina Revenue and Fiscal Affairs Office, both Lexington and Richland counties are expected to see a significant population growth by 2040. **Table 3.2** presents the population growth and projections for Lexington County and Richland County.

Table 3-2 – Population Growth

County	Population Growth				
	2000 Population	2010 Population	2040 Population	2000 2010 % Growth	2010 2040 % Growth
Lexington County	216,000	262,400	384,400	17.7%	46.5%
Richland County	320,700	384,500	464,600	16.6%	20.8%

Source: http//www.sccommunityprofiles.org/census/proj_c2010.html and DEIS. Population numbers have been rounded to the nearest hundred.

3.2 Land Use

Existing land uses immediately fronting the I-20/I-26 system interchange and the adjacent services interchanges and their arterials are predominantly mature commercial developments . A multi-family residential area is located in the northwest quadrant of the system interchange. Behind these commercial developments are established, mature single family and multi-family developments. Single family residential development is present along I-26 south of the I-26/I-126 system interchange starting at the Saluda River. The land uses transition to multi-family, commerical, and institutional as I-26 approaces Exit 110 (US 378). Along the north side of I-126, land uses are a mix of single and multi-family residential and commercial uses. To the south of I-126 and north of the Saluda River, the land use is dominated by the Riverbanks Zoo and Gardens, with a pocket of commercial uses along Candi Lane west of Greystone Boulevard.

The northwest, northeast and southeast quadrants of the I-20/I-26 and I-26/I-126 system interchanges are largely built out. There are few opportunities for additional, new development of large traffic generating land uses. The southwest quadrant of the interchange, which is bounded by Bush River Road running between Exits 63 and 108, has some undeveloped land mixed in with commercial developments and a residential subdivision. This area constitutes what is likely the largest single undeveloped area of land in the study area.

Section 3 of the I-20/I-26/I-126 Corridor Improvement Project ***DEIS*** contains additional information concerning land uses adjacent to the system and service interchanges within the larger Carolina Crossroads study area. *Figure 3.1-3 Existing land use within a half mile radius of the interchanges*, categorizes and quantifies the existing land use with a half mile radius of each of the service and system interchanges. Land uses quantified include commercial, industrial, institutional, municpal/county owned, office, parks/recreation, residential, and undeveloped. Based on this figure, the most prevalent land uses and the amount of undeveloped land adjacent to the system and service interchanges being analyzed in this study can be described as follows:

- I-20/I-26 system interchange: 47 percent residential, 25 percent commercial, 20 percent office, five percent undeveloped
- I-26/I-126 system interchange: 44 percent residential, 27 precent commercial, 19 percent industrial, two percent undeveloped
- Exit 106 (St Andrews Road): 59 percrent residential, 19 percent commercial, nine percent industrial, five percent undeveloped
- Exit 63 (Bush River Road): 35 percent residential, 28 percent commercial, 19 percent industrial, 16 percent office, one percent undeveloped

- Exit 65 (Broad River Road): 51 percent residential, 30 percent commercial, seven percent institutional, five percent undeveloped
- Colonial Life Boulevard: 42 percent residential, 35 percent undeveloped, 11 percent office.

All the interchanges, with the exception of the Colonial Life Boulevard interchange, have no more than five percent undeveloped land. The high amount of undeveloped land (35 percent) surrounding the Colonial Life interchange is due to the inclusion of the area containing the Saluda River and adjacent flood plain. It bears noting, therefore, that not all the 'undeveloped' land is necessarily able to be developed into a traffic generating land use. In this context, 'undeveloped' land has no development on it, and does not discern between developable and undevelopable land. Therefore, undevelopable land, such as the Saluda River, its floodplains, and even the land within the loop ramps at the I-20/I-26 system interchange are classified as "undeveloped".

3.3 Transportation System

The Project study area roadway transportation system is part of the Carolina Crossroads study area depicted in **Figure 1.1**. This region of Lexington and Richland counties is accessed via I-20, I-26 and I-126.

For this IMR, a focused roadway system was evaluated, centering around the I-20/I-26 and I-26/I-126 system interchanges.

External regional traffic enters and exits the network west of Exit 101 (Broad River Road), east of Exit 110 (US 378), west of Exit 61 (US 378), east of Exit 68 (Monticello Road) and east of Greystone Boulevard from Downtown Columbia. Based on the origin-destination matrices data from the microsimulation network (discussed in Section 6.1), external-to-external traffic, which includes commuting interstate traffic as well as longer distance through traffic, accounts for approximately 15 percent of the total trips within the network during the morning and afternoon peak periods.

Internal-to-internal trips account for approximately 40 percent of trips within the peak hour network. These trips are local trips having both an origin and a destination within the network. These local trips include traffic to and from arterials from the interchanges along I-20, I-26, and I-126. External-to-internal trips account for approximately 20 percent of the traffic within the network. These trips are generated outside the study area and have a destination that is reached via study area interchanges. The remaining 25% percent of the network trips are internal-to-external trips. These trips originate within the study area, access the freeway system via the interchanges and have destimations outside of the study area network.

Regional external trip ends (either origins or destinations) account for approximately 40 percent of the volume entering or exiting the network during the morning peak period. During the afternoon peak period, approximately 35 percent of volume entering or exiting the network have an external trip end.

The system-to-system interchanges process all of the external-external trips, and many of the other trip between the remaining origin-destination pairs (internal-external, external-internal, and internal-internal). Some trips with external origins or destinations may not travel through the system interchanges. Examples of such trips are those entering or exiting from the east on I-20 to/from Exit 65 (Broad River Road), and trips entering or

existing from the west on I-26 to/from the interchanges west of Exit 106 (St Andrews Road). A portion of local, internal-internal trips, such as those occuring between the I-26 interchanges west of Exit 106 (St Andrews Road) will also not travel through the system interchanges.

4 Methodology

4.1 Scenarios Analyzed

In March 2018, STV prepared the Alternatives Traffic Analysis report that incorporated the following scenarios:

- Existing Conditions
- 2040 No-Build Conditions (RA10)
- Representative Alternative 1 (RA1)
- Representative Alternative 2 (RA2)
- Representative Alternative 3 (RA3)
- Representative Alternative 4 (RA4)
- Representative Alternative 5 (RA5)
- Representative Alternative 6 (RA6)
- Representative Alternative 7 (RA7)
- Representative Alternative 8 (RA8)
- Representative Alternative 9 (RA9)
- Reasonable Alternative 1
- Reasonable Alternative 1 Modified
- Reasonable Alternative 5
- Reasonable Alternative 5 Modified

Analyses were performed for existing conditions (2015 existing traffic, intersection traffic control and geometry), No-Build conditions (2020, 2025, 2030 and 2040 traffic, and existing intersection traffic control and geometry), each of the nine Representative Alternatives (2040 traffic, and modified intersection traffic control and geometry) and the four Reasonable Alternatives (2020, 2025, 2030 and 2040 traffic and modified intersection traffic control and geometry). Additional measures of effectiveness such as mainline and arterial travel times, and external-to-external speeds/travel times were evaluated for the representative alternatives. The results of these analyses for the various alternatives were compared against one another to determine which best met the purpose and need with the least impacts and were used to help determine the RRPA for the project.

The 2040 No-Build Alternative for the I-20/I-26/I-126 System Interchange represents the existing interchange configuration, intersection traffic control and geometric conditions with no changes to those conditions which would not satisfy the purpose and need for the project. The final reasonable alternatives were selected to be moved forward in the selection process. Though traffic operations were a consideration in the evaluation of alternatives, other factors, such as construction costs, business and residential relocations, and environmental impacts were used to identify the reasonable alternatives. RA1 and RA5 were the alternatives which were identified as the reasonable alternatives from the representative alternatives. In addition, RA1 Modified and RA5 Modified were created as reasonable alternatives. The main difference between RA1 and RA1 Modified and

between RA5 and RA5 Modified was the interchange type at Exit 63, I-20 at Bush River Road. RA1 Modified included the ParClo design from RA5 and RA5 Modified included the DDI design from RA1. As documented in the DEIS, RA1 was chosen as the RRPA which will be referred to as 2040 Build RRPA.

4.2 Traffic Forecasts

Projected traffic volumes were developed using the existing traffic volume data along the mainline interstate and at the interchanges and applying a general uniform annual growth rate to those volumes to estimate 2040 morning and afternoon peak hour traffic. According to the I-20/27/77 CMP study, the AM and PM peak hour 2040 trip tables for the Columbia network were developed based on the subarea analysis of the South Carolina Statewide Model (SCSWM) trip tables. The zonal growth rates between the subarea base year and subarea future year matrices were applied to the calibrated Columbia Network existing trip tables to develop the 2040 trip tables. Any intrazonal shifts in traffic over time from the current and future year subarea matrices were distributed to ensure that the intended 2040 growth forecasts from the SCSWM were reflected in the 2040 trip tables for the peak hour operational analyses. These 2040 auto trip tables were acquired from the I-20/I-26/77 CMP study model which were then aggregated to match the Carolina Crossroads matrix developed for the Existing Conditions model. An average growth rate of 0.70 percent was then confirmed within the Carolina Crossroads study area and applied to the existing trip tables.

The 2040 peak hour traffic volumes were applied to the freeway, ramp, and intersection traffic to develop the 2040 No-Build and 2040 Build Conditions traffic volumes for use in the assessments of the interchange concepts in the Level 1A and 1B screening. The estimated 2040 volumes along the interstate and at the interchanges are contained in **Appendix B**. The trip tables developed from the CMP were used in the microsimulation analysis of the alternatives, including the reasonable alternatives and the RRPA.

4.3 Traffic Analysis

A series of capacity analyses were performed based on the methodologies and guidelines contained in the Transportation Research Board's publication **HCM 2010 Highway Capacity Manual** (HCM). Various analysis and simulation software packages, consistent with the HCM methodologies, were used in performing the analyses. These included:

- Trafficware's *Synchro* (Version 9.1.910.24)
  - Unsignalized Intersections
  - Signalized Intersections
- Caliper's *TransModeler* (Version 4.0 Build 6275)
  - Unsignalized Intersections
  - Signalized Intersections
  - Network Simulation
  - Freeway Segments
  - Weaving Segments
  - Ramp Merge/Diverge Areas

Level of Service Criteria

The analysis methodologies contained in the HCM for the various facility types and users describe the operational conditions in terms of a Level of Service (LOS). The HCM defines LOS as

"…a quality measure describing operational conditions within a traffic stream, generally in terms of such service measures as speed and travel time, freedom to maneuver, traffic interruptions, comfort and convenience. Six LOS are defined for each type of facility that has analysis procedures available. Letters designate each level, from A to F, with LOS A representing the best operating conditions and LOS F the worst. Each level of service represents a range of operating conditions and the driver's perception of those conditions. Safety is not included in the measures that establish service levels."

The following discussions and tables describe the HCM LOS criteria for freeway segments, ramp merge/diverge areas, weaving segments, unsignalized intersections and signalization intersections.

Freeway Segments

The HCM characterizes the capacity of a basic freeway segment *"…by three performance measures: density in passenger cars per mile per lane (pc/mi/ln), space mean speed in miles per hour (mi/h), and the ratio of demand flow rate to capacity (v/c). Each of these measures is an indication of how well traffic is being accommodated by the basic freeway segment."* **Table 4-1** shows the HCM LOS criteria for basic freeway segments. LOS F occurs when either the segment density exceeds 45 pc/mi/ln or when the segment v/c ratio exceeds 1.0 (regardless of the segment density).

Table 4-1 - Freeway Segment LOS Criteria

Basic Freeway Segments	
LOS	**Density (pc/mi/ln)**
A	< 11
B	> 11-18
C	> 18-26
D	> 26-35
E	> 35-45
F	> 45 v/c > 1.0

Weaving Segments

Weaving segments occur where two or more streams of traffic traveling in the same direction are able to cross each other without traffic control devices. This typically occurs where a merge area is followed by a diverge area within a relative short distance (usually less than 2,800 feet). The LOS of a weaving segment is also related to the

density of the segment. Regardless of the density, the weaving segment is considered to operate at LOS F when the v/c exceeds 1.0. **Table 4-2** shows the HCM LOS criteria for Freeway Weaving Segments.

Table 4-2 - Weaving Segment LOS Criteria

Freeway Weaving Segments	
LOS	**Density (pc/mi/ln)**
A	< 10
B	> 10-20
C	> 20-28
D	> 28-35
E	> 35
F	v/c > 1.0

Ramp Merge and Diverge Areas

Ramp-freeway junctions occur when merging maneuvers occur (on-ramps) or when diverging maneuvers occur (off-ramps). The operation of these merge and diverge areas are affected by several factors, including the operation of the adjacent freeway segment and the proximity and flow on adjacent ramps. Typically, the influence area of the ramps is 1,500 feet upstream of a diverge point and downstream from a merge point. As with freeway segments and weaving segments, the LOS of a merge or diverge area is related to the density of the segment. Regardless of the density, the merge or diverge areas are considered to operate at LOS F when the freeway demand exceeds the capacity of the upstream freeway segment (at diverge areas) or the downstream freeway segment (at merge areas), as well as when the ramp demand exceeds the ramp capacity. **Table 4-3** shows the HCM LOS criteria for Ramp Merge and Diverge areas.

Table 4-3 - Merge/Diverge LOS Criteria

Ramp Merge and Diverge Areas	
LOS	**Density (pc/mi/ln)**
A	< 10
B	> 10-20
C	> 20-28
D	> 28-35
E	> 35
F	v/c > 1.0

Unsignalized Intersections

The LOS for unsignalized intersections is based on the average control delay per vehicle. Since major street traffic is seldom controlled by STOP signs (except at intersections with ALL-WAY STOP control or in special circumstances), major street traffic generally will experience virtually no delay. Most of the delay will be

encountered by traffic on approaches controlled by STOP signs. Under certain conditions, delay will also be encountered by left turning traffic on the major street waiting for appropriately sized gaps in the opposing traffic flow to complete their turn. Therefore, the delay experienced by STOP controlled movements and major street left turns, rather than the entire average intersection delay, are used to identify the critical LOS at these intersections. **Table 4-4** shows the HCM LOS criteria for unsignalized intersections.

Table 4-4 - Unsignalized Intersection LOS Criteria

Unsignalized Intersections	
LOS	**Control Delay (sec/vehicle)**
A	< 10
B	> 10-15
C	> 15-25
D	> 25-35
E	> 35-50
F	> 50

Signalized Intersections

The LOS for signalized intersections is based on the average control delay per vehicle. LOS can be identified for the entire intersection, individual intersection approaches, and each movement/lane-group. **Table 4-5** shows the HCM LOS criteria for signalized intersections.

Table 4-5 - Signalized Intersection LOS Criteria

Signalized Intersections	
LOS	**Control Delay (sec/vehicle)**
A	< 10
B	> 10-20
C	> 20-35
D	> 35-55
E	> 55-80
F	> 80

5 Traffic Volumes

The traffic volumes used in the analysis for the I-20/I-26/I-126 System Interchange consisted of Existing (2015) conditions, and Future (2020, 2025, 2030 and 2040) No-Build and Build Conditions.

5.1 Existing Traffic Volumes

Extensive traffic data collection was performed as part of the Carolina Crossroads project. The data collection effort is summarized in a separate technical report *Traffic Data Collection, Carolina Crossroads*. Data that was collected included vehicle classification/volume counts at the I-20/I-26/I-126 system interchanges, ramp termini turning movement counts, data from mainline Automatic Traffic Recorders (ATR), and regional and ramp-to-ramp origin-destination information.

Additional turning movement count data was collected by SCDOT to extend coverage to include certain intersections adjacent to the ramp termini intersections where the original turning movement counts were collected. Collecting data at these adjacent intersections allowed for accurate traffic volumes to be used in preparing the arterial interchange and the overall network microsimulation models.

A review of the combined turning movement count and system interchange counts indicated that the system-wide morning peak hour was 7:30 to 8:30 AM and the system-wide afternoon peak hour was 4:45 to 5:45 PM. At the system ramps, the morning peak hour was found to be between 7:00 and 8:00 AM, while the afternoon peak hour was found to be 4:00 to 5:00 PM. The design peak hours used for this study was 7:15 to 8:15 AM and 4:45 to 5:45 PM, consistent with the I-20/27/77 CMP Study, and was based on a combination of the turning movement peak hour data collected in 15-minute intervals and the ramp-termini volumes collected in 60-minute intervals.

The collected ATR data, generally covering the period between January 1, 2014 and January 31, 2015, was used to determine the directional freeway volumes by balancing freeway segment volumes selected at an ATR station through the network by adding and subtracting ramp volumes entering and exiting the freeways via service interchange ramps. Mainline volume data derived from the ATR were combined with the system ramp volumes and the turning movement ramp peak hour volumes to develop existing balanced traffic volumes for the study area.

The existing balanced interstate peak hour volumes were based on the 10th highest hour volumes at selected ATR stations. Volumes throughout the network were then determined using volume data collected at the system interchange ramps and turning movement counts at the ramp terminal intersections. The balanced volumes, along with additional turning movement count data at adjacent intersections, were used to establish the observed volumes used during the calibration process of the existing TransModeler network. The calibration of the existing TransModeler network included comparisons of queues observed in the model simulations to field observations of interstate and ramp queuing, local knowledge and familiarity with recurring traffic conditions within the corridor. The existing balanced interstate volumes for Existing Conditions network are also contained in **Appendix A**.

5.2 2040 Traffic Volumes

Two methods were used to develop traffic projections that were applied to elements of the RA development and to the microsimulation of each RA. The first method involved the use of historic traffic data to estimate system-wide annual growth rates to be applied against existing traffic. The second method involved the use of origin-destination data collected as part of the Carolina Crossroads data collection and developed into regional trip tables used in the microsimulation model.

Previously collected existing traffic volume data were used as the basis for the development of the future traffic projections used in the preliminary screening of interchange Accessory Options (AO) and for high level assessment of freeway ramps, and in the microsimulation model network. Traffic projections used to estimate 2040 traffic volumes was based on changes to historic annual average daily traffic (AADT) volumes obtained from SCDOT and from growth forecasts in the South Carolina Statewide Model (SCSWM).

Projected traffic volumes were developed using the existing peak hour volumes along the mainline interstate and at the interchanges and applying a general uniform annual growth rate to those volumes to estimate 2040 morning and afternoon peak hour traffic. For the purposes of the traffic volume projections, a 0.70 percent annual growth rate was used to estimate 2040 peak hour traffic volumes. The 2040 peak hour traffic volumes were applied in the generalized interstate/interchange capacity screenings used to develop the individual RA from a range of prospective AO at each interchange. The 2040 volumes along the interstate and at the interchanges from the TransModeler 2040 No-Build network are contained in **Appendix B**.

6 Traffic Operations

6.1 TransModeler Network Analysis

TransModeler 4.0, a microsimulation software, was used to analyze the Existing, No-Build, and Build alternative freeway networks and interchange operations. A TransModeler microsimulation model consists of a large component database and executable files that are run through the TransModeler software. One single project file is comprised of network files, traffic control and signal timing plans, vehicle detector layout and configuration, trip tables for both autos and trucks, traffic volumes, and driver/roadway parameter files. This section discusses the development of the existing network based on collected O-D and traffic count data.

The Carolina Crossroads TransModeler network was developed based on a larger, regional network developed as part of the I-20/I-26/77 Corridor Management Plan (CMP) Study. The CMP study included a calibrated TransModeler model comprised of 110 miles of interstate and freeway, including six system interchanges and 43 service interchanges, in addition to 70 miles of highway, arterial, and local streets. The CMP network, which included the full project limits of the Carolina Crossroads study area, was used to develop the existing Carolina Crossroads microsimulation network. Once the CMP model was reviewed, the Carolina Crossroads network was extracted. A more detailed review was then conducted to assess the operations of the study area. Additional intersections were added and input volumes were verified and adjusted based on existing traffic count data to better define the existing network. A more detailed discussion of how the Carolina Crossroads network was developed can be found in the *Alternatives Traffic Analysis: Carolina Crossroads I-20/I-26/I-126 Corridor Project*.

FHWA generally prefers the use of McTrans' Highway Capacity Software (HCS) in the assessment of freeway operations (freeway segments, merge/diverge area, and weaving sections). There are several limitations of using HCS, which is a macroscopic, deterministic model that uses HCM Methodologies. The HCS analysis may show differing conditions than existing operations and conditions in the field because it does not consider upstream and downstream traffic impacts and is unable to model interactions between the two. The HCS model is essentially a spot check at a certain location; metering of upstream traffic and queuing resulting from congested downstream operations are not considered and will have no effect on the generated analysis. This is not the case for actual conditions, as upstream and downstream congestion may have direct impacts at a specific segment, causing a ripple effect throughout the network. HCS is also limited in its application in evaluating extremely complex weaving sections, such as those encountered in each direction on I-26 between the Exit 106 service interchange and the Exit 107 system interchange.

TransModeler is a microscopic behavior-based multi-purpose traffic simulation program that takes into consideration vehicle interaction and driver behaviors, as well as the operational impacts for both the upstream and downstream traffic conditions and can measure traffic densities on each segment and lane. For these reasons, TransModeler was used to assess all the freeway segments, merge/diverge areas, and weaving sections instead of HCS.

The design files for each of the Representative Alternatives were converted to KMZ files and imported as a background into the TransModeler microsimulation network. The existing TransModeler network was modified

to match the geometry of the KMZ files while maintaining all the external nodes and centroids of the existing network. Therefore, the same origin-destination trip tables were used for each of the alternatives. After updating the geometry to match the design of the representative alternatives, intersection controls were added for the new geometry. Where necessary, Synchro was utilized to develop basic traffic signal timing plans at the signal-controlled intersections.

A simulation-based, Dynamic Traffic Assignment (DTA) was utilized in TransModeler to create travel paths and assign demand volumes across the network for each of the Representative Alternatives. It is reasonable to assume that simulation models using DTA are better predictors of congested networks and may achieve enhanced results than a static traffic assignment method. With each DTA iteration, TransModeler will compute a relative gap between the previous iteration and an equilibrium solution. The DTA was run for 100 iterations with a goal of reaching a relative gap of 0.001. Each model was not able to converge due to the congestion, especially outside the project limits. Additional adjustments were made to the path assignments to remove unreasonable paths created by the DTA. It was assumed that RA10 (No-Build) network path assignments would be consistent with those from the Existing conditions. Therefore, a DTA was not utilized in the analysis of RA10. 2040 RRPA volumes from the TransModeler analysis are summarized in Appendix B.

The final TransModeler analyses for existing conditions, 2040 No-Build conditions, and 2040 Build RRPA conditions were performed using TransModeler 4.0 Build 6275. The existing conditions scenario includes the existing number of freeway lanes present on the segments within the study area. The 2040 No-Build conditions and 2040 Build RRPA conditions included additional freeway capacity added as part of the I-20 Widening Project (Mile Markers 49-60) and the I-26 Widening Project (Mile Markers 85 – 101) just outside of the study area. The following analysis was conducted to assess the existing and future operations of the I-20/I-26/I-126 study area:

- Freeway segment and ramp merge/diverge area operations analysis
- Signalized and unsignalized intersection analysis
- Signalized and unsignalized queuing analysis (RRPA only)

6.2 Freeway Segment Analyses

The freeway, merge and diverge densities for the I-26, I-20 and I-126 segments were obtained from the TransModeler microsimulation output files, which include an average of ten (10) runs. In calculating density, TransModeler determines the segments and lanes within the influence area for freeway, weaving, merge, and diverge analysis based on roadway classification. The HCM methodology is applied, considering only the vehicles within the influence area. The weaving sections are identified within the basic freeway, merge and diverge area analysis.

Each simulation was run for one hour with a 30-minute warm up time. Similar to the CMP Network, the network was pre-loaded prior to the 30-minute warm up time which simulates peak period congestion.

It should be noted that due to the high demand volumes, the network was not able to accommodate the demand volume in both the Existing and No-Build simulations. Extensive queuing was observed outside of the network at the freeway entry points, particularly in the 2040 No-Build scenario, at the end of the peak hour simulation during both the morning and afternoon peak hours.

The basic freeway, weaving, merge and diverge area analysis outputs for the Existing Conditions, 2040 No-Build conditions and the 2040 Build RRPA conditions are provided in **Appendix C** and a summary of results is shown in **Table 6-1** through **Table 6-9**.

The analysis results for the freeway segment analysis for the Existing Conditions, summarized in the **Table 6-1**, **Table 6-2** and **Table 6-3**, indicate the following:

- During the morning peak hour:
  - I-26 eastbound freeway segments between Exit 104 (Piney Grove Road) and Exit 107 operate at LOS F. All other segments along I-26 eastbound operate at LOS D or better
  - All I-26 westbound segments operate at LOS D or better.
  - I-20 eastbound freeway segment east of Exit 65 (Broad River Road) operates at LOS E, while other I-20 eastbound segments operate at LOS D or better.
  - I-20 westbound segment between Exit 65 (Broad River Road) and Exit 64 operate at LOS E, while other I-20 westbound segments operate at LOS D or better.
  - All I-126 eastbound freeway segments during the morning peak hour operate at LOS D or better.
  - All I-126 westbound freeway segments during the morning peak hour operate at LOS C or better.
- During the afternoon peak hour:
  - I-26 eastbound freeway segments between Exit 104 (Piney Grove Road) and Exit 106 (St Andrews Road), and between Exit 107 and Exit 108 (weaving) operate at LOS E, while the freeway segments from the I-126 diverge to Exit 110 (US 378) operate at LOS F. All other I-26 eastbound freeway segments operate at LOS D or better.
  - I-26 westbound freeway segments operate at LOS F from the I-26/I-126 merge to Exit 104 (Piney Grove Road). All other I-26 westbound segments operate at LOS D or better.
  - All I-20 eastbound freeway segments operate at LOS D or better.
  - I-20 westbound freeway segments east of Exit 65 (Broad River Road) to Exit 63 (Bush River Road) operate at LOS F, while the westbound segment between Exit 63 and Exit 61 (US 378) operates at LOS D.
  - All I-126 eastbound freeway segments operate at LOS B.
  - All I-126 westbound freeway segments operate at LOS F.

With traffic volumes projected to increase at an annual rate of 0.70 percent per year, and with no increase in freeway capacity within the IMR study area or modification to the system interchange, the increased traffic volumes traveling on I-26, I-20 and I-126 will result in increased density and reduce freeway segment LOS under 2040 No-Build conditions. The analysis results for the freeway segment analysis for the 2040 No-Build, summarized in the **Table 6-1**, **Table 6-2** and **Table 6-3**, indicate the following:

- During the morning peak hour:
  - All I-26 eastbound freeway segments operate at LOS E and F.

  - All I-26 westbound freeway segments operate at LOS D or E.
  - I-20 eastbound freeway segments from west of Exit 61 (US 378) to Exit 63 (Bush River Road) operate at LOS F, and the eastbound segment east of Exit 65 (Broad River Road) operates at LOS E. All other I-20 eastbound segments operate at LOS D or better.
  - I-20 westbound segments from east of Exit 65 to Exit 63 operate at LOS F. I-20 westbound freeway segment between Exit 63 and Exit 61 operates at LOS C.
  - All I-126 eastbound freeway segments during the morning peak hour operate at LOS D or better.
  - All I-126 westbound freeway segments during the morning peak hour operate at LOS C or better.
- During the afternoon peak hour:
  - All I-26 eastbound freeway segments operate at LOS F, except the eastbound segment east of Exit 110 (US 378) which operates at LOS C.
  - All I-26 westbound freeway segments operate at LOS F.
  - I-20 eastbound freeway segment between Exit 64 and Exit 65 operates at LOS F. All other eastbound segments operate at LOS D or better.
  - I-20 westbound freeway segments east of Exit 65 to Exit 63 operate at LOS F, while the westbound segment between Exit 63 and Exit 61 operates at LOS D.
  - All I-126 eastbound freeway segments operate at LOS B.
  - All I-126 westbound freeway segments operate at LOS F.

The increased capacity provided by the RRPA will result in generally better LOS in the morning and afternoon peak hours compared to the Existing Conditions, and improved LOS over the 2040 No-Build conditions. With improved throughput volume within the system-to-system interchange, the RRPA design pushes more volume along the freeway mainlines which may result in increased density to mainline segments not modified under Build conditions. In addition, the RRPA proposes I-26 and I-20 mainline collector-distributor roads to separate the closely spaced exit ramps resulting in a shift of volume from mainline to the frontage road systems. The analysis results for the freeway segment analysis for the 2040 Build RRPA Conditions, summarized in the **Table 6-1**, **Table 6-2** and **Table 6-3**, indicate that:

- During the morning peak hour:
  - The I-26 eastbound freeway segment between Exit 107 to the I-126 exit operates at LOS E due to the downstream congestion from the I-26/I-126 split and volume traveling in the right-most lanes in anticipation of the system diverge towards Downtown Columbia. The average speed reported along this segment is greater than 40 mph. All other I-26 eastbound segments operate at LOS D or better.
  - All I-26 westbound freeway segments operate at LOS D or better.
  - The I-20 eastbound freeway segment east of Exit 65 (Broad River Road) operates at LOS F due to capacity constraints downstream of the project limits. However, as traffic merges down to three lanes prior to the bridge over the Broad River, the average speed along I-20 eastbound is greater than 50 mph while the average speed along the CD road is less than 20 mph. All other eastbound segments operate at LOS D or better.
  - All I-20 westbound freeway segments operate at LOS D or better.
  - The I-126 eastbound freeway segment between Colonial Life Boulevard and Greystone Boulevard operates at LOS E this is the result of increased segment density due to improved throughput volume from the system-system interchange congestion downstream of project

limits toward downtown Columbia. An acceptable average speed is maintained at 54 mph. The eastbound segment from I-26 to Colonial Life Blvd operates at LOS D.
    - All I-126 westbound freeway segments operate at LOS B.
- During the afternoon peak hour:
    - All I-26 eastbound freeway segments operate at LOS C.
    - The I-26 westbound freeway segment between Exit 106 (St Andrews Road) and Exit 104 (Piney Grove Road) operates at LOS F due to increased density resulting from increased volume throughput. The average speed along this segment is greater than 40 mph. All other westbound freeway segments operate at LOS D or better.
    - The I-20 eastbound freeway segment east of Exit 65 (Broad River Road) operates at LOS E due to capacity constraints downstream of the project limits, while all other eastbound segments operate at LOS B or better. The I-20 eastbound average speed east of Exit 65 is greater than 55 mph.
    - The I-20 westbound segments east of Exit 65 operate at LOS E with an average speed of greater than 40 mph. The I-20 westbound segment between Exit 63 (Bush River Road) and Exit 61 (US 378) operate at LOS F, with an average speed of less than 20 mph due to downstream congestion resulting from capacity constraints just west of the project limits. With the capacity constraints removed between Exit 63 and Exit 61, average speed is greater than 40 mph. All other westbound segments operate at LOS A.
    - I-126 eastbound freeway segments operate at LOS B or better.
    - All I-126 westbound freeway segments operate at LOS D.

Heavy queuing and ramp backups along I-20 eastbound were identified at the eastern project limits during the AM peak hour and along I-20 westbound between Exit 63 (Bush River Road) and Exit 61 (US 378) during the PM peak hour. Additional simulation runs were made to assess the need to include an additional upstream merge location from the eastbound CD road prior to Exit 65. These additional simulation runs indicated the congestion and queue backup observed along I-20 eastbound was due to the capacity constraints created by the transitioning of the four-lane freeway section into the existing three lane section at the Broad River Bridge just east of Exit 65(Broad River Road). With the removal of the capacity constraints, the merge from the eastbound CD road functions acceptably and no additional upstream merge location should be necessary.

The heavy queuing along I-20 westbound was due to the capacity constraints created by the transitioning of the four-lane freeway section into the existing three lane section prior to the Exit 61 (US 378) interchange in addition to Exit 61 westbound off-ramp spillback onto the mainline. With these capacity constraints opened, acceptable LOS is obtained within the RRPA design. **Attachment D** includes a summary of the basic freeway density with the capacity restraints removed outside of project limits along I-20, in addition to average peak hour speeds for all freeway segments for the RRPA externally constrained and unconstrained.

Table 6-1 - I-26 Freeway Segment Capacity Analysis – Existing, 2040 No-Build, and 2040 Build RRPA

Freeway Segment	Existing Conditions				2040 No Build Conditions				2040 Build RRPA Conditions			
	AM Peak Hour		PM Peak Hour		AM Peak Hour		PM Peak Hour		AM Peak Hour		PM Peak Hour	
	LOS[1]	Density[2]	LOS[1]	Density[2]	LOS[1]	Density[2]	LOS[1]	Density[2]	LOS[1]	Density[2]	LOS[1]	Density[2]
I 26 Eastbound												
Exit 104 to Exit 106	F	67.8	E	40.4	F	84.5	F	59.9	D	27.9	C	20.2
Exit 106 to Exit 107[W]	F	85.7	D	31.3	F	108.7	F	72.3	E	37.0	C	20.5
Exit 107 to Exit 108[W]	F	74.3	E	36.9	F	94.6	F	103.9				
I-126 Diverge to I-126 Merge	D	31.2	F	53.4	E	36.6	F	112.9				
Exit 108 to Exit 110	D	26.3	F	94.6	E	38.6	F	123.7	C	20.2	C	22.6
east of Exit 110	C	19.7	C	23.3	C	20.2	C	24.3	C	21.1	C	25.5
I 26 Westbound												
east of Exit 110	C	21.1	C	23.5	E	36.7	F	93.3	D	34.6	D	29.9
Exit 110 to Exit 108	B	15.6	D	25.1	C	19.9	F	92.5	B	17.0	C	20.3
I-126 Diverge to I-126 Merge	D	33.7	F	97.7	E	44.1	F	155.1	B	15.4	B	16.2
Exit 108 to Exit 107[W]	D	34.7	F	98.7	F	45.1	F	156.1	C	21.8	D	33.9
Exit 107 to Exit 106[W]	D	34.7	F	98.7	F	45.1	F	156.1				
I-126 Merge to Exit 106	Freeway Segment reported as part of RRPA											
Exit 106 to Exit 104	D	33.7	F	49.3	F	47.2	F	50.7	D	27.5	F	46.8

[1] Per Highway Capacity Manual 2010 criteria.

[2] Density expressed as PCE/per mile/per lane.

[W] Weaving Section

Table 6-2 - I-20 Freeway Segment Capacity Analysis – Existing and 2040 No-Build, and 2040 Build RRPA

Freeway Segment	Existing Conditions				2040 No Build Conditions				2040 Build RRPA Conditions			
	AM Peak Hour		PM Peak Hour		AM Peak Hour		PM Peak Hour		AM Peak Hour		PM Peak Hour	
	LOS[1]	Density[2]	LOS[1]	Density[2]	LOS[1]	Density[2]	LOS[1]	Density[2]	LOS[1]	Density[2]	LOS[1]	Density[2]
I 20 Eastbound												
Exit 61 to Exit 63	D	32.6	C	18.7	F	75.9	C	24.8	D	31.2	B	16.3
Exit 63 to Exit 64	C	19.0	B	13.5	C	20.7	D	29.3	C	19.2	A	10.9
Exit 64 to Exit 65	C	25.3	C	22.5	D	28.0	F	68.8				
east of Exit 65	E	35.5	D	26.6	E	39.5	D	29.5	F+	57.1	E+	37.1
I 20 Westbound												
east of Exit 65	D	29.3	F	56.8	F	46.7	F	123.4	D	32.4	E+	41.8
Exit 65 to Exit 64	E	36.5	F	58.7	F	73.0	F	58.4	A	8.0	A	7.8
Exit 64 to Exit 63[W]	B	15.5	F	51.5	F	49.6	F	56.3				
Exit 63 to Exit 61	B	14.6	D	26.6	C	18.8	D	26.2	B	15.6	F+	127.4

[1] Per Highway Capacity Manual 2010 criteria.

[2] Density expressed as PCE/per mile/per lane.

[W] Weaving Section

[+]Poor LOS is a result of downstream congestion outside of study area

Table 6-3 - I-126 Freeway Segment Capacity Analysis – Existing and 2040 No-Build, and 2040 Build RRPA

Freeway Segment	Existing Conditions				2040 No Build Conditions				2040 Build RRPA Conditions			
	AM Peak Hour		PM Peak Hour		AM Peak Hour		PM Peak Hour		AM Peak Hour		PM Peak Hour	
	LOS[1]	Density[2]	LOS[1]	Density[2]	LOS[1]	Density[2]	LOS[1]	Density[2]	LOS[1]	Density[2]	LOS[1]	Density[2]
I 126 Eastbound												
I-26 to Colonial Life Blvd	D	29.4	B	15.3	D	29.7	B	17.3	D	29.2	A	10.8
Colonial Life Blvd to Greystone Blvd	C	24.9	B	13.7	C	25.1	B	15.0	E[+]	38.8	B	16.9
I 126 Westbound												
Greystone Blvd to Colonial Life Blvd	B	14.4	F	48.6	B	13.4	F	113.2	B	14.4	D	31.2
Colonial Life Blvd to I-26	C	19.1	F	90.7	C	24.7	F	115.9	B	12.6	D	30.1

[1] Per Highway Capacity Manual 2010 criteria.

[2] Density expressed as PCE/per mile/per lane.

[+]Poor LOS is a result of downstream congestion outside of study area

6.3 Freeway Merge Area Analyses

The analysis results for the ramp merge areas for Existing Conditions, summarized in **Table 6-4**, **Table 6-5** and **Table 6-6**, indicate the following:

- During the morning peak hour:
  - I-26 eastbound merge areas between Exit 101 (Broad River Road) and Exit 107 operate at LOS F. All other eastbound merge areas operate at LOS D or better.
  - I-26 westbound merge areas operate at LOS D or better.
  - I-20 eastbound merge areas operate at LOS D or better.
  - I-20 westbound merge areas operate at LOS D or better except for Exit 65 (Broad River Road), where the merge area operates at LOS E.
  - I-126 eastbound merge area operates at LOS C.
  - I-126 westbound merge area operates at LOS B.
- During the afternoon peak hour:
  - I-26 eastbound merge areas of Exit 108 and Exit 108 (I-126) operate at LOS F, while the merge area of Exit 107 (weaving) operates at LOS E. All other eastbound merge areas operate at LOS D or better.
  - I-26 westbound merge areas better Exit 108 (I-126) and Exit 107 operate at LOS F. The merge area of Exit 106 (St Andrews Road) operates at LOS E. Exit 110 merge area operates at LOS B.
  - I-20 eastbound merge areas operate at LOS C or better.
  - I-20 westbound merge areas operate at LOS C, except Exit 65 (Broad River Road) and Exit 64 merge areas which operate at LOS F.
  - I-126 eastbound merge area operates at LOS B.
  - I-126 westbound merge area operates at LOS C.

With traffic volumes projected to increase at an annual rate of 0.70 percent per year, and with no increase in freeway capacity or modification to the system interchange, the increased traffic volumes traveling on I-26, I-20 and I-126 will results in increased density and reductions of merge area LOS under 2040 No-Build conditions. The analysis results for the ramp merge areas for 2040 No-Build Conditions, summarized in **Table 6-4**, **Table 6-5** and **Table 6-6**, indicate the following:

- During the morning peak hour:
  - I-26 eastbound merge areas between Exit 104 (Piney Grove Road) and Exit 107 operate at LOS F, while the Exit 108 merge area operates at LOS E. All other eastbound ramp merge areas operate at LOS C or better.
  - I-26 westbound merge areas of Exit 108 (I-126) and Exit 107 operates at LOS E. All other westbound ramp merge areas operate at LOS D or better.
  - I-20 eastbound merge areas of Exit 61 (US 378) operate at LOS F. Exit 65 (Broad River Road) and Exit 64 loop ramp merge areas operate at LOS E. All other eastbound ramp merge areas operate at LOS C.
  - I-20 westbound merge areas of Exit 65 (Broad River Road) and Exit 64 operate at LOS F All other westbound ramp merge areas operate at LOS C or better.
  - All I-126 merge areas operate at LOS B.
- During the afternoon peak hour:

- I-126 eastbound merge area operates at LOS C.
- I-126 westbound merge area operates at LOS A.
- I-26 westbound merge areas between Exit 110 (US 378) and Exit 107 operate at LOS F. The Exit 106 (St Andrews Road) merge area operates at LOS E.
- I-20 eastbound merge areas of Exit 64 and Exit 64 Loop operate at LOS F and LOS E, respectively. All other ramp merge areas operate at LOS D or better.
- I-20 westbound merge areas of Exit 65 (Broad River Road) and Exit 64 operate at LOS F All other westbound ramp merge areas operate at LOS C.
- I-126 eastbound merge area operates at LOS B.
- I-126 westbound merge area operates at LOS F.

The additional capacity provided by the RRPA will result in generally better LOS in the morning and afternoon peak hours compared to the Existing Conditions, and improved LOS over the 2040 No-Build conditions. With improved throughput volume within the system-to-system interchange, the RRPA design pushes more volume along the freeway mainlines which may result in increased density and worse levels of service in merge areas not modified under Build conditions. In addition, the RRPA includes I-26 and I-20 mainline collector-distributor roads to separate the closely spaced exit ramps resulting in a decrease in the number of merge ramps along I-26 and I-20. The 2040 Build RRPA Conditions analysis results, summarized in **Table 6-4**, **Table 6-5** and **Table 6-6**, indicate that:

- During the morning peak hour:
  - I-26 eastbound merge area of Exit 106 (St Andrews Road) operates at LOS E due to the downstream congestion at the I-26/I-126 split. The average speed at this merge area is above 35 mph. All other eastbound ramp merge areas operate at LOS C or better.
  - All I-26 westbound merge areas operate at LOS C or better.
  - I-20 eastbound merge areas of the CD Road and Exit 65 (Broad River Road) operate at LOS F due to capacity constraints downstream of the project limits. As traffic merges down to three lanes prior to the bridge over the Broad River, the average speed along I-20 eastbound in this merge area is between 10-20 mph. With the capacity constraints removed between Exit 65 (Broad River Road) and Exit 68 (Monticello Road), average speed increases to greater than 40 mph and the CD Road merge area operates at LOS C, while the Exit 65 merge area operates at LOS E. The Exit 61 merge area operates at LOS D.
  - All I-20 westbound merge areas operate at LOS B or better.
  - I-126 eastbound merge area from the I-20 ramp operates at LOS E due to existing congestion downstream of project limits toward downtown Columbia. The average speed at this merge area is greater than 40 mph. The Colonial Life Blvd merge area operates at LOS D.
  - I-126 westbound merge areas operate at LOS B or better.
- During the afternoon peak hour:
  - All I-26 eastbound merge areas operate at LOS C or better.
  - I-26 westbound merge areas of Exit 107 and Exit 106 (St Andrews Road) operate at LOS E due to increased volume and downstream congestion between Exit 104 (Piney Grove Road) and Exit 106. The average speed at these merge areas are greater than 40 mph. All other westbound merge areas operate at LOS C.
  - All I-20 eastbound merge areas operate at LOS D or better

- I-20 westbound merge areas of the CD Road and Exit 63 (Bush River Road) operate at LOS F with an average speed of 20 mph, due to downstream congestion and capacity constraints just west of the project limits. With the capacity constraints removed between Exit 63 (Bush River Road) and Exit 61 (US 378), the average speed is greater than 55 mph around these merge areas. The Exit 65 (Broad River Road) merge area operates at LOS A.
- I-126 eastbound merge areas operate at LOS C or better.
- I-126 westbound merge areas operate at LOS D or better.

As part of this analysis, the Exit 61 eastbound on-ramp acceleration lane was extended as an added lane to increase capacity and reduce congestion identified in the analysis. However, the Exit 61 (US 378) westbound off-ramp, outside of the project limits, may substantially affect the westbound mainline density and Exit 63 (Bush River Road) westbound merge operations due to high ramp volumes and congestion identified along US 378 at Exit 61. An extension of the Exit 61 off-ramp and/or increasing capacity to a two-lane off ramp outside of this project may keep the ramp queues from spilling back to the mainline and improve the reported density within the study area.

As mentioned in the freeway segment analysis, increased volumes and improved volume throughput within the system-to-system interchange resulted in heavy queuing and ramp backup along I-20 eastbound which affected the eastbound merge area at Exit 65 and the CD Road merge. The need to include an additional upstream merge location for the CD road prior to Exit 65 was considered and assessed. However, the congestion at the eastbound merge area at Exit 65 was due to the capacity constraints at the project limit transition at the Broad River crossing just east of Exit 65. With the capacity constraints removed, the congestion decreases so an acceptable LOS is obtained within the RRPA design without an additional upstream merge from the CD road. **Attachment D** includes a summary of the merge density with the capacity restraints removed outside of project limits along I-20, in addition to average peak hour speeds for all merge areas for the RRPA externally constrained and unconstrained.

Also, it should be noted that the Greystone Boulevard Interchange merge area along I-126 westbound operates at an acceptable LOS during both the morning and afternoon peak hours as shown in the table below. The distance between the Colonial Life Blvd westbound off-ramp and the Greystone Boulevard westbound on-ramp is sufficient and will not affect ramp operations.

Table 6-4 - I-26 Ramp Merge Capacity Analysis – Existing and 2040 No-Build, and 2040 Build RRPA

Merge Area	Existing Conditions				2040 No Build Conditions				2040 Build RRPA Conditions			
	AM Peak Hour		PM Peak Hour		AM Peak Hour		PM Peak Hour		AM Peak Hour		PM Peak Hour	
	LOS[1]	Density[2]	LOS[1]	Density[2]	LOS[1]	Density[2]	LOS[1]	Density[2]	LOS[1]	Density[2]	LOS[1]	Density[2]
I 26 Eastbound												
Exit 104	F	64.5	D	29.5	F	89.2	F	58.1	C	27.9	C	20.2
Exit 106 Loop	F	51.3	D	34.7	F	61.5	F	78.6	E	37.0	C	20.5
Exit 106[W]	F	85.7	D	31.3	F	108.7	F	72.3				
Exit 107 Loop[W]	F	51.3	D	34.7	F	61.5	F	78.6	B	13.9	B	13.1
Exit 107[W]	F	74.3	E	36.9	F	94.6	F	103.9				
Exit 108	D	32.1	F	52.2	E	38.6	F	115.0	Removed as part of RRPA			
Exit 108 (I-126)	C	25.5	F	75.8	C	25.2	F	122.0	C	20.2	C	22.6
Exit 110	B	15.2	B	17.5	B	15.3	B	18.6	C	21.1	C	25.5
I 26 Westbound												
Exit 110	B	15.6	B	25.1	B	19.9	F	92.5	B	17.0	C	20.3
Exit 108 (I-126)	D	30.2	F	121.3	E	39.2	F	157.8	B	15.1	C	23.3
Exit 108[W]	C	24.3	F	100.8	D	31.9	F	128.8	Removed as part of RRPA			
Exit 107 Loop[W]	C	25.9	F	96.4	D	34.8	F	111.7	C	25.9	E	39.7
Exit 107[W]	C	27.2	F	104.6	E	35.6	F	113.3				
Exit 106	C	23.4	E	36.7	D	32.4	E	37.8	C	27.9	E	42.4

[1] Per Highway Capacity Manual 2010 criteria.

[2] Density expressed as PCE/per mile/per lane.

[W] Weaving Section

Table 6-5 - I-20 Ramp Merge Capacity Analysis – Existing and 2040 No-Build, and 2040 Build RRPA

Merge Area	Existing Conditions				2040 No Build Conditions				2040 Build RRPA Conditions			
	AM Peak Hour		PM Peak Hour		AM Peak Hour		PM Peak Hour		AM Peak Hour		PM Peak Hour	
	LOS[1]	Density[2]	LOS[1]	Density[2]	LOS[1]	Density[2]	LOS[1]	Density[2]	LOS[1]	Density[2]	LOS[1]	Density[2]
I 20 Eastbound												
Exit 61	D	29.0	B	16.4	F	74.9	C	21.0	D	31.2	B	16.3
Exit 63 Loop	C	21.6	B	14.2	C	24.2	B	19.9	Removed as part of RRPA			
Exit 63	B	19.0	B	13.5	C	20.7	D	29.3	Removed as part of RRPA			
Exit 64 Loop[W]	D	33.2	C	23.9	E	37.2	E	38.0	Removed as part of RRPA			
Exit 64	C	24.5	C	22.3	C	27.1	F	71.4	Removed as part of RRPA			
CD Road	CD Ramp added as part of RRPA								F[+]	95.6	B	19.8
Exit 65	D	32.6	C	23.5	E	37.4	C	23.7	F[+]	93.5	D	34.2
I 20 Westbound												
Exit 65	E	36.5	F	58.7	F	73.0	F	58.4	A	8.0	A	7.8
Exit 64 Loop[W]	B	19.5	C	26.1	C	26.6	C	23.2	Removed as part of RRPA			
Exit 64[W]	B	15.5	F	51.5	F	49.6	F	56.3	Removed as part of RRPA			
CD Road	CD Ramp added as part of RRPA								B	11.4	F[+]	92.0
Exit 63	B	12.3	C	20.3	B	14.2	C	21.0	B	12.5	F[+]	119.6

[1] Per Highway Capacity Manual 2010 criteria.

[2] Density expressed as PCE/per mile/per lane.

[W] Weaving Section

[+]Poor LOS is a result of downstream congestion outside of study area

Table 6-6 - I-126 Ramp Merge Capacity Analysis – Existing and 2040 No-Build, and 2040 Build RRPA

Merge Area	Existing Conditions				2040 No Build Conditions				2040 Build RRPA Conditions			
	AM Peak Hour		PM Peak Hour		AM Peak Hour		PM Peak Hour		AM Peak Hour		PM Peak Hour	
	LOS[1]	Density[2]	LOS[1]	Density[2]	LOS[1]	Density[2]	LOS[1]	Density[2]	LOS[1]	Density[2]	LOS[1]	Density[2]
I 126 Eastbound												
Exit from I-20 EB/WB	Ramp added as part of RRPA								E	38.3	C	21.6
Colonial Life Blvd	C	24.9	B	13.7	C	25.1	B	15.0	D	33.2	B	15.9
I 126 Westbound												
Greystone Blvd	B	12.8	C	25.4	A	8.4	F	75.4	B	12.0	D	28.7
Colonial Life Blvd	Ramp added as part of RRPA								A	6.2	B	16.2

[1] Per Highway Capacity Manual 2010 criteria.

[2] Density expressed as PCE/per mile/per lane.

[+]Poor LOS is a result of downstream congestion outside of study area

6.4 Freeway Diverge Area Analyses

The analysis results for the ramp diverge areas for Existing Conditions, summarized in **Table 6-7**, **Table 6-8** and **Table 6-9**, indicate the following:

- During the morning peak hour:
  - I-26 eastbound diverge areas between Exit 104 and Exit 110 operate at LOS F. The Exit 110 diverge area operates at LOS D.
  - I-26 westbound diverge areas operate at LOS D or better.
  - I-20 eastbound diverge area of Exit 63 operates at LOS F. All other eastbound diverge areas operate at LOS D or better.
  - I-20 westbound diverge area of Exit 64 operates at LOS E. All other westbound diverge areas operate at LOS B.
  - I-126 eastbound diverge area operates at LOS B.
  - I-126 westbound diverge areas operate at LOS B.
- During the afternoon peak hour:
  - I-26 eastbound diverge areas between Exit 104 and Exit 108 operate at LOS D or E, while the diverge area of Exit 110 operates at LOS F.
  - I-26 westbound diverge areas between Exit 108 and the Exit 106 loop operate at LOS F, while the diverge area of Exit 104 operates at LOS E. Exit 110 diverge area operates at Exit 110.
  - I-20 eastbound diverge areas operate at LOS C or better.
  - I-20 westbound diverge areas of Exit 65, Exit 64 and Exit 63 operate at LOS F, while Exit 61 operates at LOS E. All other westbound diverge areas operate at LOS C.
  - I-126 eastbound diverge area operates at LOS B
  - I-126 westbound diverge area to I-26 westbound operates at LOS F, while all other diverge areas operate at LOS D or better.

With traffic volumes projected to increase at an annual rate of 0.70 percent per year, and with no increase in freeway capacity or modification to the system interchange, the increased traffic volumes traveling on I-26, I-20 and I-126 will results in increased density and reductions of diverge area LOS. The analysis results for the ramp diverge areas for 2040 No-Build Conditions, summarized in **Table 6-7**, **Table 6-8** and **Table 6-9**, indicate the following:

- During the 2040 No-Build morning peak hour:
  - All I-26 eastbound diverge areas operate at LOS F.
  - I-26 westbound diverge area of Exit 110 (US 378) operates at LOS F. I-26 westbound diverge areas between Exit 106 (St Andrews Road) and Exit 104 (Piney Grove Road) operate at LOS E. All other westbound ramp diverge areas operate at LOS D.
  - I-20 eastbound diverge areas of Exit 63 (Bush River Road) and Exit 64 operate at LOS F and LOS E, respectively. All other eastbound diverge areas operate at LOS C.
  - I-20 westbound diverge area of Exit 64 and Exit 63 (Bush River Road) operates at LOS F. All other westbound diverge areas operate at LOS D or better.
  - I-126 eastbound diverge area operates at LOS B.
  - I-126 westbound diverge areas operate at LOS B or better.
- During the afternoon peak hour:

- All I-26 eastbound diverge areas operate at LOS F.
- All I-26 westbound diverge areas operate at LOS F.
- I-20 eastbound diverge area (weaving) of the Exit 64 loop operates at LOS E, while the eastbound Exit 63 (Bush River Road) diverge area operates at LOS F. All other eastbound ramp diverge areas operate at LOS D.
- All I-20 westbound diverge areas operate at LOS F, except Exit 64 loop diverge (weaving) area which operates at LOS C.
- I-126 eastbound diverge area operates at LOS B.
- I-126 westbound diverge areas operate at LOS F.

The additional capacity provided by the RRPA will result in generally better LOS in the morning and afternoon peak hours compared to the Existing Conditions, and improved LOS over the 2040 No-Build conditions. In addition, the RRPA proposes I-26 and I-20 mainline collector-distributor roads to separate the closely spaced exit ramps resulting in a decrease in the number of diverge ramps along I-26 and I-20. The 2040 Build RRPA analysis results, summarized in **Table 6-7**, **Table 6-8** and **Table 6-9**, indicate that:

- During the morning peak hour:
  - I-26 eastbound diverge area of the CD Road operates at LOS F due to the increased volume processed by the RRPA, resulting in increased congestion accessing I-20. In addition, the volume now traveling in the right-most lanes in anticipation of the system diverge towards Downtown Columbia causes additional queuing at this diverge area. The diverge area of the I-26/I-126 split operates at LOS E due to the weaving conflicts between the Exit 106 (St. Andrews Road) eastbound on-ramp and the volume exiting to I-126 eastbound. This is caused by the majority of traffic traveling to downtown Columbia that now exit to the right to access I-126. The average speed at the CD Road diverge area is less than 25 mph while average speed at the I-26/I-126 split diverge is less than 40 mph. This diverge area is expected to operate at an acceptable LOS at opening year (2020) and projected to be operating at a failing LOS by 2025. All other eastbound ramp diverge areas operate at LOS C.
  - I-26 westbound diverge area of Exit 110 (US 378) operates at LOS F with an average speed of greater than 30 mph. All other westbound diverge areas operate at LOS C or better.
  - I-20 eastbound diverge area of the CD road area operates at LOS D.
  - I-20 westbound diverge area of Exit 61 (US 378) operates at LOS E due to westbound off-ramp spill back from Exit 61 congestion and other network capacity constraints outside the study area. With the capacity constraints removed, the diverge area operates at LOS D at Exit 61. All other westbound diverge areas operate at LOS D or better.
  - I-126 eastbound diverge areas operate at LOS D.
  - I-126 westbound diverge areas operate at LOS B or better.
- During the afternoon peak hour:
  - All I-26 eastbound diverge areas operate at LOS C or better.
  - I-26 westbound diverge area of Exit 104 (Piney Grove Road) operates at LOS F due to the increased volume processed by the RRPA, resulting in congestion. The average speed of the diverge area is greater than 40 mph. All other diverge areas operate at LOS D or better.
  - I-20 eastbound diverge area of the CD road area operates at LOS B.
  - I-20 westbound merge areas operate at LOS B or better except for Exit 65 (Broad River Road) and Exit 61 (US 378) diverge areas, which operate at LOS F due to westbound off-ramp spill back

from Exit 61 and capacity constraints outside of the project area. The average speed at the diverge area of Exit 61 is less than 25 mph. With the capacity constraints removed along I-20 westbound, the Exit 61 diverge area will continue to operate at LOS F due to US 378 arterial queuing that extends onto the mainline.

- I-126 eastbound diverge areas operate at LOS B.
- I-126 westbound diverge areas operate at LOS D or better.

As part of this project the Exit 110 off-ramp was lengthened and the diverge area was relocated to keep the off-ramp queues from spilling back to the mainline. The spacing between the relocated diverge area and merge area (from I-126 westbound fly-over ramp) has been shortened to about 2,500 feet which is sufficient and will not adversely affect mainline and ramp operations. The Exit 61 westbound off-ramp, outside of the project limits, may substantially affect the westbound mainline density and Exit 63 westbound merge operations due to high ramp volumes and congestion identified along the Exit 61 arterial. **Attachment D** includes a summary of the basic freeway density with the capacity restraints removed outside of project limits along I-20, in addition to average peak hour speeds for all diverge areas for the RRPA externally constrained and unconstrained.

Also, it should be noted that the Greystone Boulevard Interchange diverge area along I-126 eastbound operates at an acceptable LOS during both the morning and afternoon peak hours as shown in the table below. The distance between the Colonial Life Blvd eastbound on-ramp and the Greystone Boulevard eastbound off-ramp is sufficient and will not affect ramp operations.

Table 6-7 - I-26 Ramp Diverge Capacity Analysis – Existing and 2040 No-Build, and 2040 Build RRPA

Diverge Area	Existing Conditions				2040 No Build Conditions				2040 Build RRPA Conditions			
	AM Peak Hour		PM Peak Hour		AM Peak Hour		PM Peak Hour		AM Peak Hour		PM Peak Hour	
	LOS[1]	Density[2]	LOS[1]	Density[2]	LOS[1]	Density[2]	LOS[1]	Density[2]	LOS[1]	Density[2]	LOS[1]	Density[2]
I 26 Eastbound												
Exit 106	F	56.3	D	29.1	F	73.4	F	50.6	C	24.3	B	17.4
CD Road	Ramp added as part of RRPA								F	71.9	C	26.9
Exit 107[W]	F	85.7	D	31.3	F	108.7	F	72.3	Removed as part of RRPA			
Exit 107 Loop[W]	F	51.3	D	34.7	F	61.5	F	78.6	Removed as part of RRPA			
Exit 108[W]	F	74.3	E	36.9	F	94.6	F	103.9	Removed as part of RRPA			
I-26 EB to I-26 EB	F	52.0	E	40.6	F	58.5	F	103.7	E	37.0	C	20.5
Exit 110	D	32.6	F	106.1	F	54.6	F	140.0	C	21.5	C	24.6
I 26 Westbound												
Exit 110	C	22.6	C	24.3	F	49.4	F	103.0	F	48.1	D	32.5
Exit 108 (Existing-No Build) / To I-20 (Build RRPA)	C	24.3	F	100.8	D	31.9	F	128.8	B	17.0	C	20.3
Exit 107[W]	C	24.3	F	100.8	D	31.9	F	128.8	Removed as part of RRPA			
Exit 107 Loop[W]	C	25.9	F	96.4	D	34.8	F	111.7	Removed as part of RRPA			
Exit 106[W]	C	27.2	F	104.6	E	35.6	F	113.3	B	15.1	C	23.3
Exit 106 Loop	D	28.4	F	83.7	E	37.1	F	92.5				
Exit 104	D	28.4	E	43.6	E	42.1	F	47.8	C	26.3	F	46.8

[1] Per Highway Capacity Manual 2010 criteria.

[2] Density expressed as PCE/per mile/per lane.

[W] Weaving Section

Table 6-8 - I-20 Ramp Diverge Capacity Analysis – Existing and 2040 No-Build, and 2040 Build RRPA

Diverge Area	Existing Conditions				2040 No Build Conditions				2040 Build RRPA Conditions			
	AM Peak Hour		PM Peak Hour		AM Peak Hour		PM Peak Hour		AM Peak Hour		PM Peak Hour	
	LOS[1]	Density[2]	LOS[1]	Density[2]	LOS[1]	Density[2]	LOS[1]	Density[2]	LOS[1]	Density[2]	LOS[1]	Density[2]
I 20 Eastbound												
Exit 63 (Existing-No Build) / CD Road (Build RRPA)	F	52.5	C	22.9	F	71.6	D	29.7	D	31.2	B	16.3
Exit 64	B	19.0	B	13.5	C	20.7	D	29.3	Removed as part of RRPA			
Exit 64 Loop[W]	D	33.2	C	23.9	E	37.2	E	38.0	Removed as part of RRPA			
Exit 65	C	25.3	C	22.5	C	28.0	F	68.8	Removed as part of RRPA			
I 20 Westbound												
Exit 65	B	19.8	F	53.6	C	26.1	F	121.4	D	34.0	F[+]	44.7
CD Road	Ramp added as part of RRPA								B	14.6	B	16.7
Exit 64	E	36.9	F	59.3	F	73.7	F	58.9	Removed as part of RRPA			
Exit 64 Loop[W]	B	19.5	C	26.1	C	26.6	C	23.2	Removed as part of RRPA			
Exit 63	B[W]	15.5[W]	F[W]	51.5[W]	F[W]	49.6[W]	F[W]	56.3[W]	A	8.0	A	7.8
Exit 61	B	19.7	E	43.4	D	29.4	F	91.0	E[+]	42.5	F[+]	124.7

[1] Per Highway Capacity Manual 2010 criteria.

[2] Density expressed as PCE/per mile/per lane.

[W] Weaving Section

[+]Poor LOS is a result of downstream congestion outside of study area

Table 6-9 - I-126 Ramp Diverge Capacity Analysis – Existing and 2040 No-Build, and 2040 Build RRPA

Diverge Area	Existing Conditions				2040 No Build Conditions				2040 Build RRPA Conditions			
	AM Peak Hour		PM Peak Hour		AM Peak Hour		PM Peak Hour		AM Peak Hour		PM Peak Hour	
	LOS[1]	Density[2]	LOS[1]	Density[2]	LOS[1]	Density[2]	LOS[1]	Density[2]	LOS[1]	Density[2]	LOS[1]	Density[2]
I 126 Eastbound												
Colonial Life Blvd	Ramp added as part of RRPA								D	29.2	B	10.8
Greystone Blvd	B	15.6	B	11.3	B	15.9	B	17.0	D	33.9	B	16.2
I 126 Westbound												
Greystone Blvd	B	15.3	C	27.0	B	16.1	F	90.1	B	14.6	D	31.4
Colonial Life Blvd	B	12.2	D	29.6	A	8.7	F	76.1	B	10.1	C	23.5
Exit to I-26 EB	B	12.1	F	63.6	B	13.0	F	108.4	B	10.4	C	23.0
Exit to I-20 EB/WB (CD Road)	Ramp added as part of RRPA								A	6.3	B	16.4

[1] Per Highway Capacity Manual 2010 criteria.

[2] Density expressed as PCE/per mile/per lane.

6.5 Intersection Capacity Analysis

Capacity analyses for the signalized and unsignalized intersections at the study interchanges were performed using TransModeler software for Existing, 2040 No-Build, and 2040 Build RRPA conditions. Preminary interchange alternatives capacity screening analysis was completed and documented in the *Alternatives Traffic Analysis Technical Memo.* Detailed analyses for Exit 106, Exit 108, Exit 110, Exit 63 and Exit 65 under existing conditions (existing traffic, intersection traffic control and geometry) and 2040 No-Build conditions (2040 traffic, and existing interection traffic control and geometry) are summarized in the following sections.

The signalized and unsignalized intersection analyses for Existing and 2040 No-Build conditions were obtained from the TransModeler microsimulation output files, which include an average delay of ten (10) runs. For unsignalized intersections, the intersection operation is represented by the worst approach delay and LOS of all of the STOP-controlled appraches to the intersection. TransModeler measures control delay in accordance with HCM methodology and considers vehicles as soon as they begin to brake to join the back of a queue forming at an intersection until it has passed through the intersection and returned to speed. The comparision results of the capacity analyses for existing conditions and the 2040 No-Build conditions are shown in **Table 6-10** and in **Figure 6-1** through **Figure 6-5**. The TransModeler control delay outputs are provided in **Appendix E**.

Under Existing Conditions:

- At Exit 106 (St. Andrews Road – S-32-36/S-40-42), the study interestions operate at LOS D or better during the morning peak hour and afternoon peak hour.
- At Exit 108 (Bush River Road – S-40-31), the intersection of Bush River Road at I-26 eastbound off-ramp/driveway operates at LOS E during both the morning and afternoon peak hour. All other intersections operate at LOS C or better during both the morning and afternoon peak hours.
- At Exit 110 (US 378 – Sunset Boulevard), the intersection of Sunset Boulevard at the I-26 eastbound off-ramp operates at LOS E and LOS F during the morning and afternoon peak hours, respectively, while the other intersections operate at LOS D or better during the morning and afternoon peak hours.
- At Exit 63 (Bush River Road – S-32-273), the study intersections operate at LOS C or better during the morning and afternoon peak hours.
- At Exit 65 (Broad River Road – US 176), the intersection of Broad River Road at the I-20 westbound ramps operates at LOS F during the afternoon peak hour. All other intersections operate at LOS D or better during the morning and afternoon peak hours.

In general, with forecast increases in traffic and without improvements to the intersections, the delay in the 2040 No-Build analyses can be expected to be higher comparing to the Existing Conditions. Improvements such as additional storage to turning movements and/or signal timing adjustments would be necessary to provide acceptable LOS during the 2040 No-Build operating conditions at these interesections.

For the RRPA, the individual interchanges were modeled using Synchro/SimTraffic to analyze and simulate the arterial and intersection operations and to aid in the development of traffic control and geometric recommendations. As discussed in the *Alternative Traffic Analysis Technical Memo Report*, the arterials coded

into the TransModeler network were verified and adjusted based on existing conditions and collected traffic data. Due to the limitations of Synchro's dynamic assignment of volumes and modeling of static volumes only, intersection capacity analysis for the RRPA was also conducted in the Transmodeler network to account for shifted traffic from existing interchange configurations to 2040 Build interchange configurations. Those analyses will be discussed below.

Table 6-10 - Intersection Capacity Analysis Results - Existing Vs. 2040 No Build

Intersection #	Intersection Name	2015 Existing Conditions				2040 No Build Conditions			
		AM Peak		PM Peak		AM Peak		PM Peak	
		LOS	Delay	LOS	Delay	LOS	Delay	LOS	Delay
Exit 106									
100000348	St. Andrews Road at Jamil Road	B	13.5	B	11.1	B	18.8	B	13.9
100000178	St. Andrews Road at I-26 EB Ramps / Woodland Hills Road	A	8.4	B	10.3	A	9.3	B	10.8
100000182	St. Andrews Road at I-26 WB Ramps[1]	A	3.3	A	3.9	A	4.1	A	5.9
100000358	St. Andrews Road at Fernandina Road / Burning Tree Drive	B	15.7	C	28.3	B	17.7	D	37.3
100000354	St. Andrews Road at Kay Street / Chartwell Road	B	19.6	B	12.6	D	51.0	C	34.1
100000360	Burning Tree Road at I-26 WB Off-Ramp[1]	B	11.2	A	10.0	B	14.1	D	30.5
Exit 108									
100000256	Bush River Road at Zimalcrest Drive	A	9.5	A	6.2	B	10.3	A	7.6
100000898	Bush River Road at I-26 EB Off-Ramp / Driveway	B	11.3	E	55.2	B	11.5	E	64.5
100000252	Bush River Road at Morninghill Drive	C	21.5	C	34.9	C	26.2	E	73.0
100000184	Bush River Road at Arrowwood Road	B	10.3	B	17.7	B	12.5	E	60.4
Exit 110									
100000186	Sunset Boulevard (US 378) at E. Hospital Drive / Harbor Drive	B	17.0	D	37.5	C	28.0	E	68.5
100000093	Sunset Boulevard (US 378) at I-26 EBR Off-Ramp[1]	E	38.6	F	53.2	F	54.4	F	100.9
100000903	Sunset Boulevard (US 378) at I-26 Ramps	C	26.1	C	25.6	C	26.6	C	28.0
100000902	Sunset Boulevard (US 378) at I-26 WBR Off-Ramp[1]	C	24.1	D	26.3	E	44.5	E	42.2
100000163	Sunset Boulevard (US 378) at Chris Drive / McSwain Drive	A	6.4	A	8.1	A	7.1	B	13.7
Exit 63									
100000250	Bush River Road at Outlet Point Blvd	B	17.5	A	9.9	D	36.6	C	23.4
100000455	Bush River Road at Berryhill Drive	A	5.3	B	12.3	A	7.7	C	27.9
100000139	Bush River Road at I-20 WB Ramps	A	7.2	A	6.9	A	9.9	A	8.0
100000142	Bush River Road at I-20 EB Off-Ramp	A	6.5	A	9.1	A	6.4	A	8.9
100000255	Bush River Road at Independence Avenue	C	23.7	B	12.1	C	33.7	B	14.3
Exit 65									
100000187	Broad River Road at Marley Drive / Briargate Circle	B	19.6	D	47.4	D	51.5	F	100.3
100000189	Broad River Road at I-20 WB Ramps	C	33.9	F	99.4	D	53.4	F	222.9
100000190	Broad River Road at I-20 EB Ramps / Garner Lane	A	9.9	B	13.6	B	10.6	D	37.2
100000195	Broad River Road at Longcreek Drive	A	5.5	A	6.8	A	6.4	B	12.0

[1] Intersection unsignalized under all scenarios; worst approach LOS and delay reported.

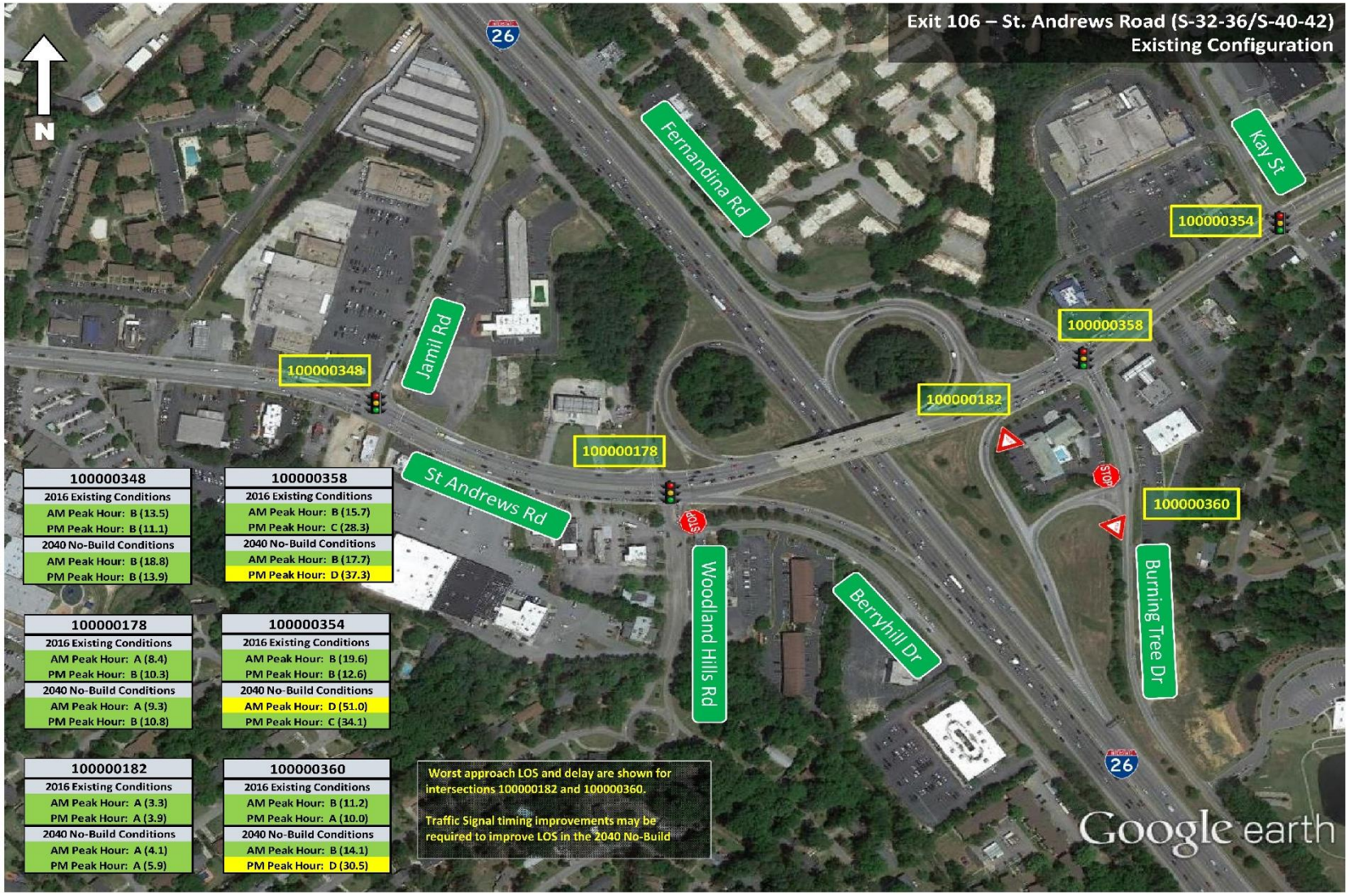

Figure 6-1 - Exit 106 - St. Andrews Road Intersection LOS Summary



Figure 6-2 - Exit 108 - Bush River Road Intersection LOS Summary

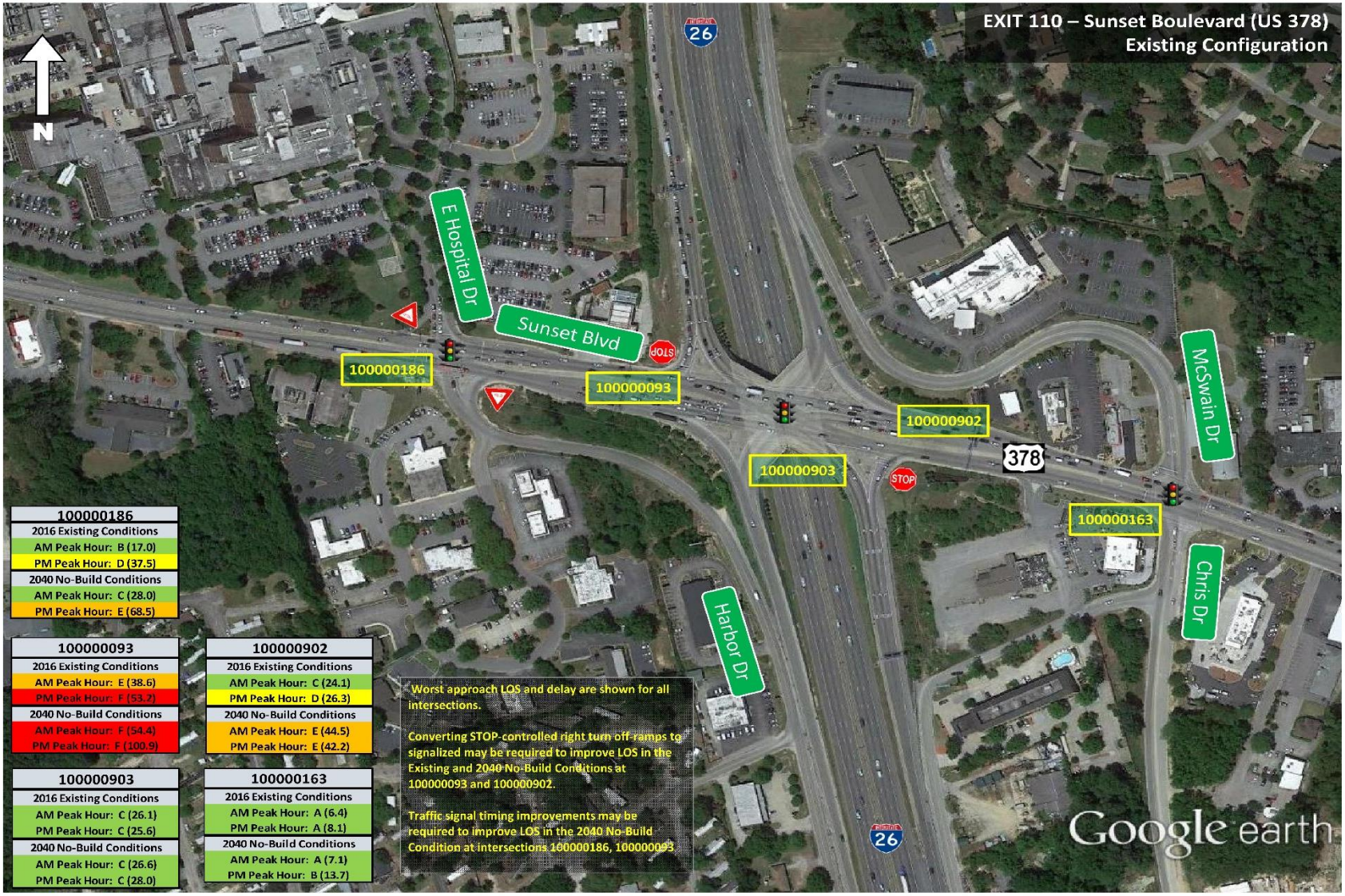

Figure 6-3 - Exit 110 - Sunset Boulevard (US 378) Intersection LOS Summary

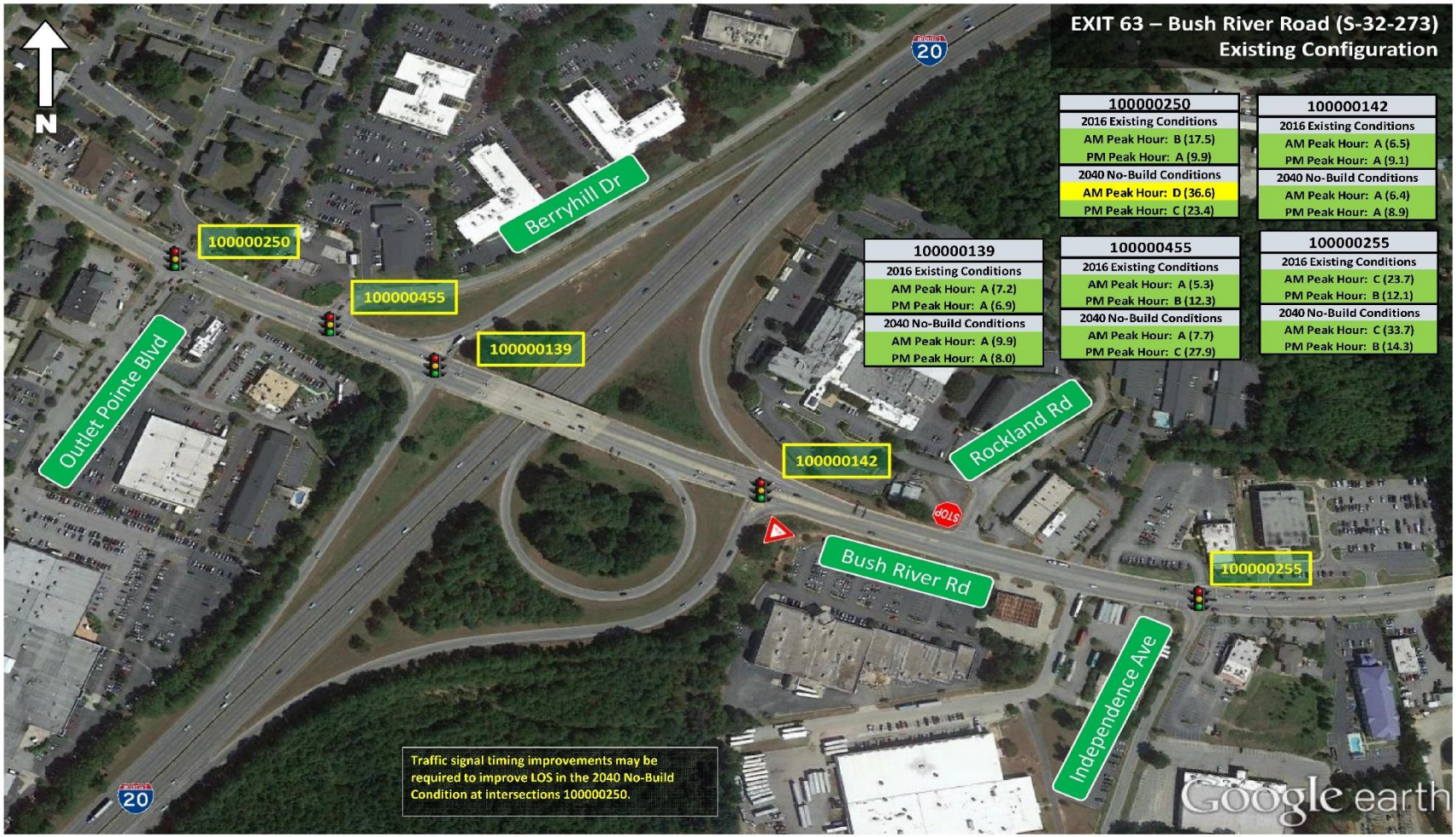

Figure 6-4 - Exit 63 - Bush River Road Intersection LOS Summary

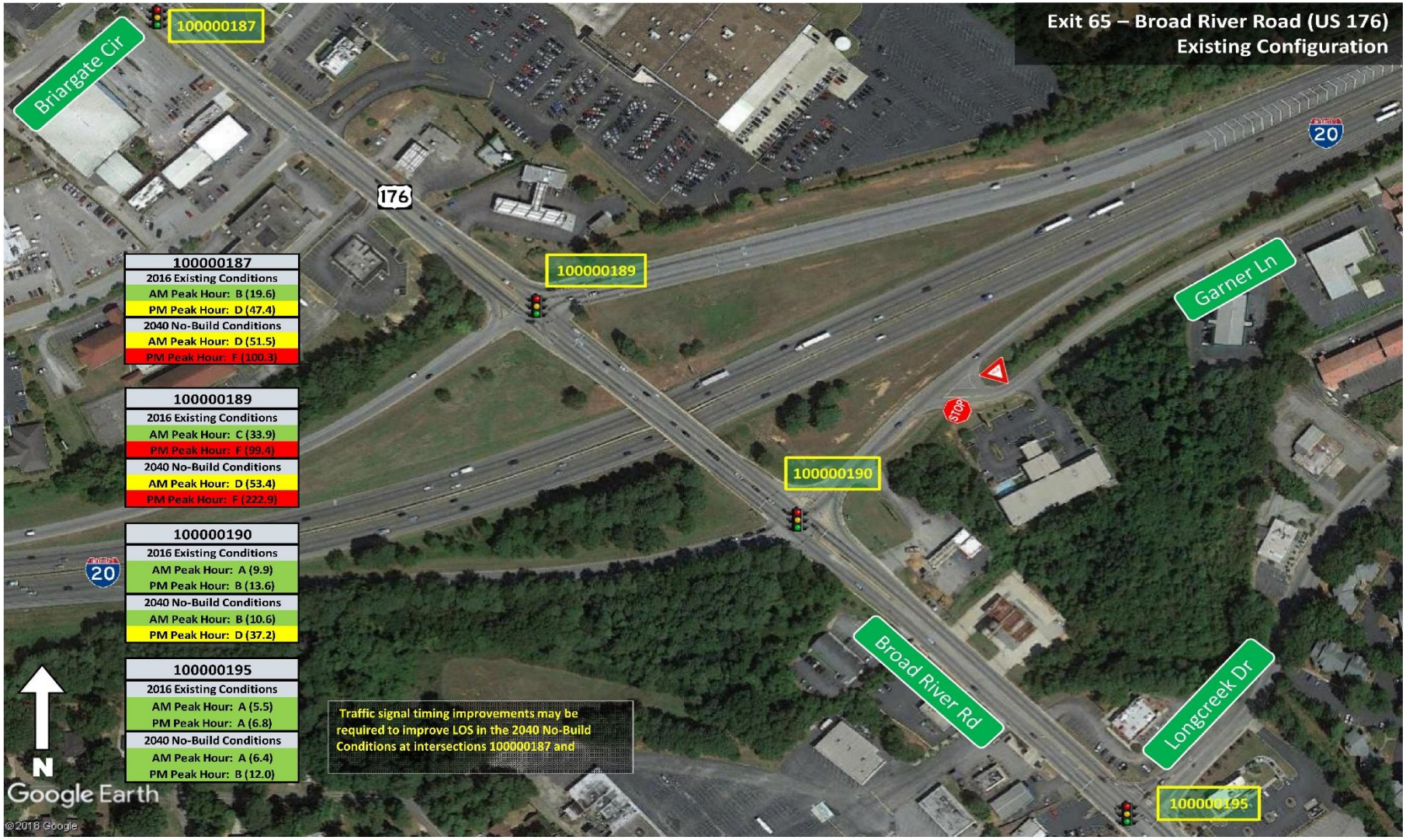

Figure 6-5 - Exit 65 - Broad River Road (US 176) Intersection LOS Summary

The signalized and unsignalized intersection analyses for 2040 Build RRPA conditions were obtained from the TransModeler microsimulation output files, which include an average delay of ten (10) runs. As part of the 2040 Build intersection capacity analysis, queue reports were obtained from the TransModeler output files. TransModeler reports queue lengths in two ways, as lane queues and as spillback queues. Lane queues are measured by lane, but do not measure beyond the upstream superlink approach. However, spillback queues capture the full, dynamic length even if queues branch in different directions. Both lane queues and spillback queues are provided at the ramp terminal intersections and adjacent intersections along the arterials.

Capacity Analysis results at Exit 106, Exit 108, Exit 63, Exit 65, and Colonial Life Blvd for 2040 Build Conditions are summarized in **Table 6-11** and below. **Table 6-12** through **Table 6-16** summarize queue length results for the above interchanges, excluding Exit 108.

Exit 106 – St. Andrews Road

The existing configuration of Exit 106 is expected to be replaced with a Single Point Urban Interchange (SPUI) as part of the RRPA. Other elements of the concept include:

- Converting the I-26 westbound right turn off-ramp to eastbound St Andrews Road from yield-controlled to STOP-controlled.
- Modifying the intersection of St. Andrews Road at Fernandina Road to include northbound dual left turn lanes

The 2040 Build configuration for Exit 106 is depicted in **Figure 6.6**.

Under the 2040 Build conditions, all intersections operate at LOS D or better except the intersection of St. Andrews Road with the I-26 westbound right turn off-ramp to eastbound St Andrews Road, which operate at LOS F during both the morning and afternoon peak hours. This insection has been converted from a yield controlled intersection to STOP-controlled consistent with SCDOT guidelines for the treatment of channelized right turns at ramp termini interesction.

Exit 108 – Bush River Road

The existing configuration of Exit 108 is expected to be modified to remove the interstate access ramps as part of the RRPA. The 2040 Build configuration for Exit 108 is depicted in **Figure 6.7.**

Under the 2040 Build conditions, all intersections operate at LOS D or better.

Exit 110 – Sunset Boulevard

The existing SPUI configuration of Exit 110 is expected to be unchanged. The only modification included in the RRPA is the extension of the I-26 westbound off-ramp. Due to congestion and queuing on the off-ramps that were identified under 2040 No-Build conditions, the right turn movements on the off ramps were converted from STOP-control and incorporated into the SPUI signalization. No geometric modifications to the arterial were proposed.

Under the 2040 Build conditions, all intersections operate at LOS D or better except the intersection of Sunset Boulevard at Chris Drive/McSwain Drive that operates at LOS E.

Exit 63 – Bush River Road

The existing configuration of Exit 63 is expected to be replaced with a Diverging Diamond Interchange (DDI) as part of the RRPA. Other elements of the concept include:

- Removing the intersection of Bush River Road at Berryhill Drive and creating a cul de sac at the end of Berryhill Drive.
- Adding an overpass bridge connection of Berryhill Drive and Rockland Road.
- Installation of a signal at the intersection of Bush River Road and Rockland Road with an exclusive eastbound left turn phase.

The 2040 Build RRPA configuration for Exit 106 is depicted in **Figure 6.8**.

Under the 2040 Build RRPA conditions, all intersections operate at LOS C or better except the intersection of Bush River Road at Outlet Point Boulevard which operates at LOS E.

Exit 65 – Broad River Road

The existing configuration of Exit 65 is expected to be replaced with a Single Point Urban Interchange (SPUI) as part of the RRPA. The 2040 Build configuration for Exit 106 is depicted in **Figure 6.9**.

Under the 2040 Build conditions, all intersections operate at LOS D or better.

Colonial Life Boulevard Interchange

As part of the RRPA, the existing configuration of Colonial Life Boulevard is expected to be replaced with a full access tight urban diamond interchange (TUDI) with braided ramps providing access to/from Colonial Life Boulevard instead of the partial interchange providing access to/from I-126 to the east towards the City of Columbia. Both the eastbound and westbound ramp intersections will be signalized.

The 2040 Build RRPA configuration for Exit 106 is depicted in **Figure 6.10**.

Under the 2040 Build RRPA conditions, both intersections operate at LOS C or better.

Table 6-11 - Intersection Capacity Analysis Results – 2040 Build RRPA

TransModeler Node #	Intersection Name	AM LOS	AM Delay	PM LOS	PM Delay
Exit 106					
100000348	St. Andrews Road at Jamil Road	C	23.7	C	20.8
127	St. Andrews Road at Woodland Hills Road	C	26.6	B	13.1
40	St. Andrews Road at I-26 SPUI Intersection	D	44.0	D	37.6
100000182	St. Andrews Road at I-26 WBR Off-ramp[1] (STOP-controlled)	F	120.3	F	100.7
100000358	St. Andrews Road at Fernandina Road/Burning Tree Drive	D	35.0	C	31.2
100000354	St. Andrews Road at Kay Street / Chartwell Road	C	30.1	C	20.9
Exit 108					
100000256	Bush River Road at Zimalcrest Drive	A	7.5	A	8.9
100000898	Bush River Road at Driveway	A	4.0	A	2.5
100000252	Bush River Road at Morninghill Drive	D	36.3	C	24.5
100000184	Bush River Road at Arrowwood Road	B	11.2	B	12.6
Exit 110					
100000186	Sunset Boulevard (US 378) at E. Hospital Drive / Harbor Drive	D	42.1	D	41.3
100000093	Sunset Boulevard (US 378) at I-26 EBR Off-Ramp (signal controlled)	B	14.8	B	12.9
100000903	Sunset Boulevard (US 378) at I-26 Single Point Ramps Intersection	C	27.0	C	24.2
100000902	Sunset Boulevard (US 378) at I-26 WBR Off-Ramp (signal controlled)	A	7.0	B	19.0
100000163	Sunset Boulevard (US 378) at Chris Drive / McSwain Drive	A	8.6	E	59.4
Exit 63					
141	Bush River Road at Outlet Pointe Boulevard	E	59.5	B	15.5
52	Bush River Road at I-20 WB Ramps DDI Intersection	A	9.4	C	21.6
150	Bush River Road at I-20 EB Ramps DDI Intersection	C	23.5	C	22.3
120	Bush River Road at Rockland Road	A	8.8	B	16.2
100000255	Bush River Road at Independence Avenue	B	14.4	C	24.5
Exit 65					
100000187	Broad River Road at Marley Drive / Briargate Circle	B	19.7	D	35.9
54	Broad River Road at I-20 WBR Off-Ramp (signal controlled)	B	12.6	B	19.7
79	Broad River Road at I-20 Single Point Ramps Intersection	D	43.5	D	36.2
100000190	Broad River Road at I-20 EBR Off-Ramp (signal controlled)	A	5.8	B	10.3
100000195	Broad River Road at Longcreek Drive	B	13.3	B	12.9
Colonial Life Boulevard					
108	Colonial Life Boulevard at I-126 EB Ramps	C	21.4	C	20.8
107	Colonial Life Boulevard at I-126 WB Ramps	A	7.3	B	15.5

[1] Intersection unsignalized; worst approach LOS and delay reported.

Table 6-12 - 2040 Build RRPA Intersection Queue Lengths - Exit 106

Intersection #	Intersection Name	Lane Group	AM Peak Hour 95th Percentile Queue Length (ft)	AM Peak Hour Maximum Spillback Queue Length (ft)	PM Peak Hour 95th Percentile Queue Length (ft)	PM Peak Hour Maximum Spillback Queue Length (ft)	Available Storage Length (ft)
100000348	**St. Andrews Road at Jamil Road**	SBL	175	225	150	200	972
		SBR	25		50		1,450
		EBL	125	750	500	625	200
		EBT	425		125		1,050
		WBT	125	275	175	325	725
		WBR	175		125		725
127	**St. Andrews Road at I-26 EB Ramps / Woodland Hills Road**	NBL	50	250	50	200	400
		NBR	50		50		625
		SBL	500	925	75	100	150
		SBR	50		50		900
		EBT	75	275	100	325	725
		EBTR	650		325		150
		WBL	125	225	125	200	200
		WBT	100		75		275
40	**St. Andrews Road at I-26 SPUI Ramps**	NBL*	175	1,425	225	875	1,575
		NBR*	0		0		575
		SBL	500	925	75	100	2,225
		EBL	75	225	150	200	300
		EBT	150		150		300
		EBR	-		-		-
		WBL	250	1,250	200	1,000	425
		WBT	150		250		425
		WBR	0		25		-
100000358	**St. Andrews Road at Fernandina Road / Burning Tree Drive**	NBL	75	200	175	350	200
		NBT	125		200		325
		NBR	125		150		250
		SBL	25	200	75	125	300
		SBT	150		100		>3,000
		SBR	0		0		225
		EBL	125	1,250	150	1,000	175
		EBTR	150		150		375
		WBL	50	925	50	425	125
		WBT	575		375		575
		WBTR	175		100		575
10000354	**St. Andrews Road at Kay Street / Chartwell Road**	NBLTR	125	150	75	75	300
		SBLTR	275	500	150	200	>1,000
		EBL	100	925	175	425	200
		EBT	125		150		575
		EBTR	100		125		575
		WBL	25	0	25	0	175
		WBT	425		125		850
		WBTR	250		150		850
100000360	**Burning Tree Road at I-26 WB Off-Ramp[1]**	NBT	0	0	75	325	>1,000
		SBT	0	200	0	350	325
		EBL	225	275	325	1,000	300
		EBR	75		25		300

Table 6-13 - 2040 Build RRPA Intersection Queue Lengths - Exit 110

Intersection #	Intersection Name	Lane Group	AM Peak Hour 95th Percentile Queue Length (ft)	AM Peak Hour Maximum Spillback Queue Length (ft)	PM Peak Hour 95th Percentile Queue Length (ft)	PM Peak Hour Maximum Spillback Queue Length (ft)	Available Storage Length (ft)
100000144	Sunset Boulevard (US 378) at W. Hospital Drive /Sunset Ct	NBL	0	0	0	0	125
		NBTR	0		0		725
		SBL	150	200	300	450	500
		SBLT	125		275		1,350
		SBR	100		350		150
		EBL	350	1,300	125	725	125
		EBT	825		525		1,400
		EBTR	850		525		1,400
		WBL	0	1,200	0	1,175	150
		WBT	75		150		950
		WBR	0		0		150
100000186	Sunset Boulevard (US 378) at E. Hospital Drive / Harbor Drive	NBLT	50	375	25	500	>3,000
		NBR	325		450		50
		SBL	125	150	250	325	225
		SBLT	75		200		425
		SBR	75		175		75
		EBL	125	1,200	75	1,175	225
		EBT	775		725		950
		EBR	0		0		225
		WBL	225	1,775	200	750	100
		WBT	375		275		400
		WBR	0		25		100
100000903	Sunset Boulevard (US 378) at I-26 SPUI Intersection	NBL	175	1,625	175	300	350
		NBR	125		125		1,650
		SBL	100	2,025	100	650	3,425
		SBR	100		100		3,425
		EBL	75	1,775	75	750	300
		EBT	75		75		500
		EBR	0		0		425
		WBL	100	325	100	400	200
		WBT	100		100		625
		WBR	175		125		425
100000163	Sunset Boulevard (US 378) at Chris Drive / McSwain Drive	NBL	100	150	150	200	400
		NBTR	0		0		>3,000
		SBL	0	75	0	175	160
		SBTR	75		125		600
		EBL	75	325	50	400	400
		EBT	200		150		650
		EBTR	200		175		650
		WBL	0	225	0	1,975	175
		WBT	150		1,000		550
		WBTR	175		1,225		550

Table 6-14 - 2040 Build RRPA Intersection Queue Lengths - Exit 63

Intersection #	Intersection Name	Lane Group	AM Peak Hour 95th Percentile Queue Length (ft)	AM Peak Hour Maximum Spillback Queue Length (ft)	PM Peak Hour 95th Percentile Queue Length (ft)	PM Peak Hour Maximum Spillback Queue Length (ft)	Available Storage Length (ft)
141	Bush River Road at Outlet Pointe Boulevard / Ease Meadow Ct	NBLT	0	50	0	475	650
		NBTR	50		375		650
		SBLT	50	50	25	25	75
		SBTR	0		0		75
		EBL	0	2,200	0	750	125
		EBT	250		75		2,200
		EBTR	650		525		125
		WBL	275	300	75	225	200
		WBT	50		150		500
		WBTR	100		175		500
52	Bush River Road at SB I-20 Ramps	SBL	125	0	150	0	1,000
		SBR	125		125		1,000
		EBT	75	0	75	0	500
		EBR	50		250		100
		WBL	0	175	25	325	500
		WBT	100		200		500
150	Bush River Road at NB I-20 Ramps	NBL	100	125	125	275	1,750
		NBR	175		125		1,750
		EBL	0	300	0	400	475
		EBT	200		275		475
		WBT	50	0	50	0	575
		WBR	100		175		350
120	Bush River Road at Rockland Park	SBL	75	125	100	300	150
		SBR	50		200		850
		EBL	175	250	75	300	225
		EBT	175		125		575
		WBT	100	200	200	650	475
		WBTR	150		325		475
100000255	Bush River Road at Independence Avenue	NBLR	125	175	575	675	900
		EBT	175	425	100	625	475
		EBTR	275		300		475
		WBL	175	175	125	225	175
		WBT	75		175		2,475

Table 6-15 - 2040 Build RRPA Intersection Queue Lengths - Exit 65

Intersection #	Intersection Name	Lane Group	AM Peak Hour 95th Percentile Queue Length (ft)	AM Peak Hour Maximum Spillback Queue Length (ft)	PM Peak Hour 95th Percentile Queue Length (ft)	PM Peak Hour Maximum Spillback Queue Length (ft)	Available Storage Length (ft)
100000187	**Broad River Road (US 176) at Marley Dr/Briargate Circle**	NBL	125	275	25	1,025	150
		NBT	150		750		900
		NBTR	225		800		900
		SBT	50	1,425	100	250	150
		SBT	775		225		775
		SBTR	625		200		775
		EBL	50	75	75	125	150
		EBTR	75		75		550
		WBL	275	325	175	250	225
		WBTR	50		75		>3,000
79	**Broad River Road (US 176) at I-20 SPUI Intersection**	NBL	100	300	75	175	475
		NBT	100		125		925
		NBR	200		0		300
		SBL	225	275	225	1,025	525
		SBT	200		100		1,175
		SBR	50		25		275
		EBL	175	225	200	350	1,625
		EBR	225		225		1,625
		WBL	200	0	250	0	1,725
		WBR	200		375		1,725
100000195	**Broad River Road (US 176) at Longcreek Drive**	NBT	100	125	250	300	625
		NBR	0		0		225
		SBL	175	300	125	175	175
		SBT	175		125		925
		WBL	0	250	25	175	375
		WBLR	175		125		375
		WBR	75		125		50

Table 6-16 - 2040 Build RRPA Intersection Queue Lengths - Colonial Life Boulevard

Intersection #	Intersection Name	Lane Group	AM Peak Hour		PM Peak Hour		Available Storage Length (ft)
			95th Percentile Queue Length (ft)	Maximum Spillback Queue Length (ft)	95th Percentile Queue Length (ft)	Maximum Spillback Queue Length (ft)	
107	Colonial Life Boulevard at I-126 WB Ramp	NBT	50	25	100	75	225
		SBT	125	200	75	400	525
		SBR	75		175		525
		WBR*	150	250	275	450	1,025
108	Colonial Life Boulevard at I-126 EB Ramp	SBL	225	325	150	200	225
		EBL	150	150	125	150	1,350
		EBL	150	150	125	150	3,100

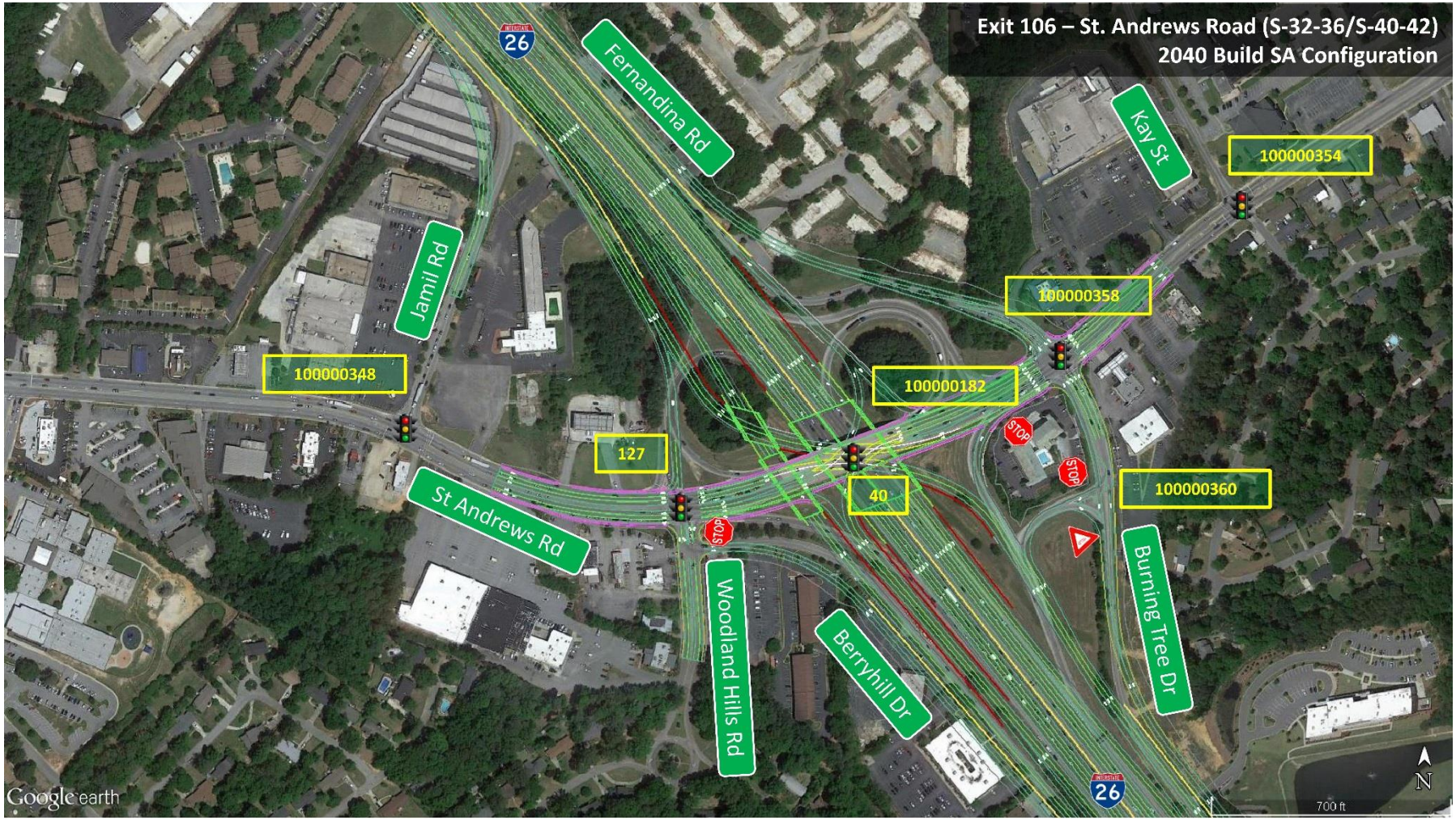

Figure 6-6 - Exit 106 - St. Andrews Road 2040 Build RRPA Configuration



Figure 6-7 - Exit 108 - Bush River Road 2040 Build RRPA Configuration

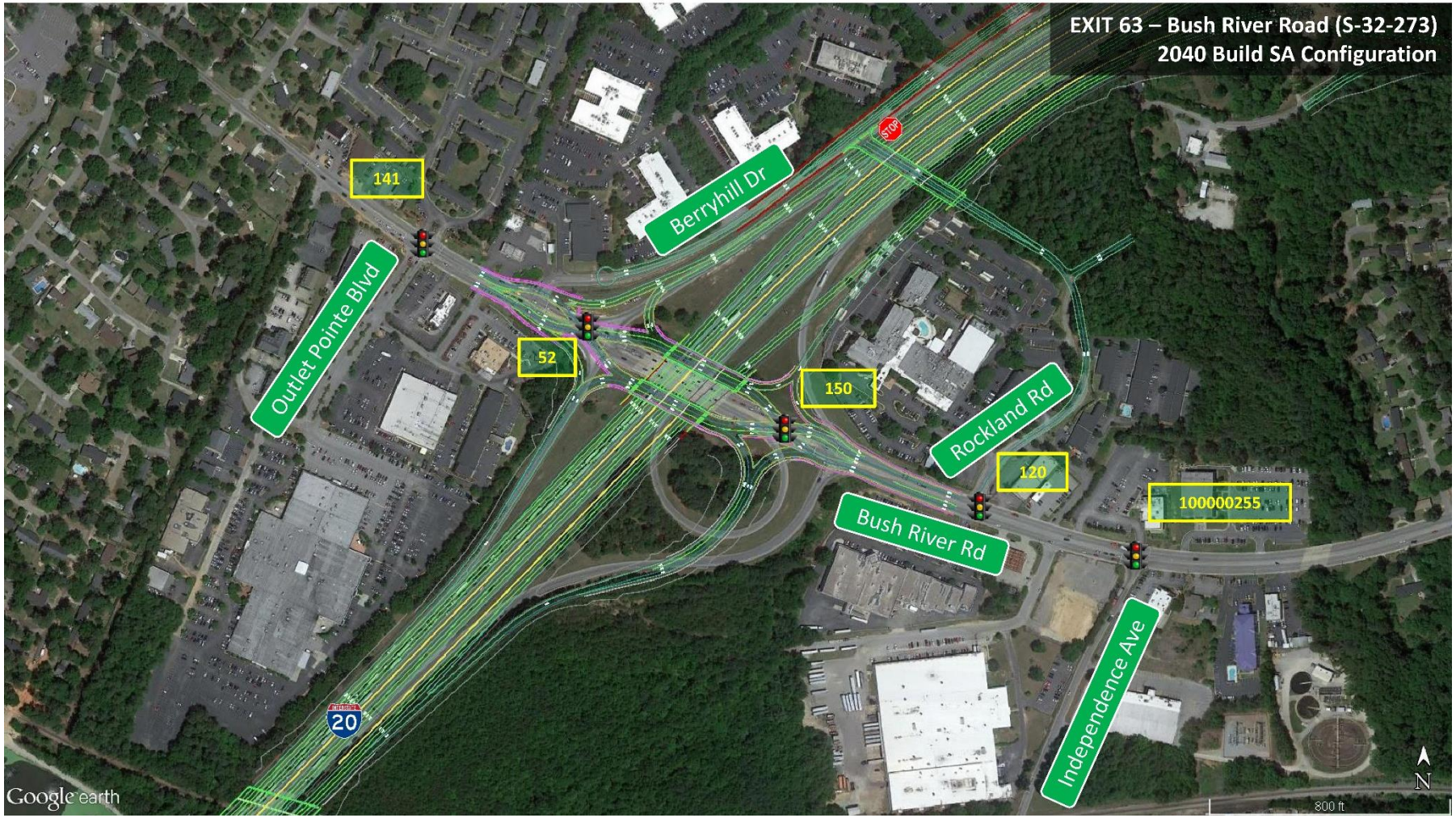

Figure 6-8 - Exit 63 - Bush River Road 2040 Build RRPA Configuration

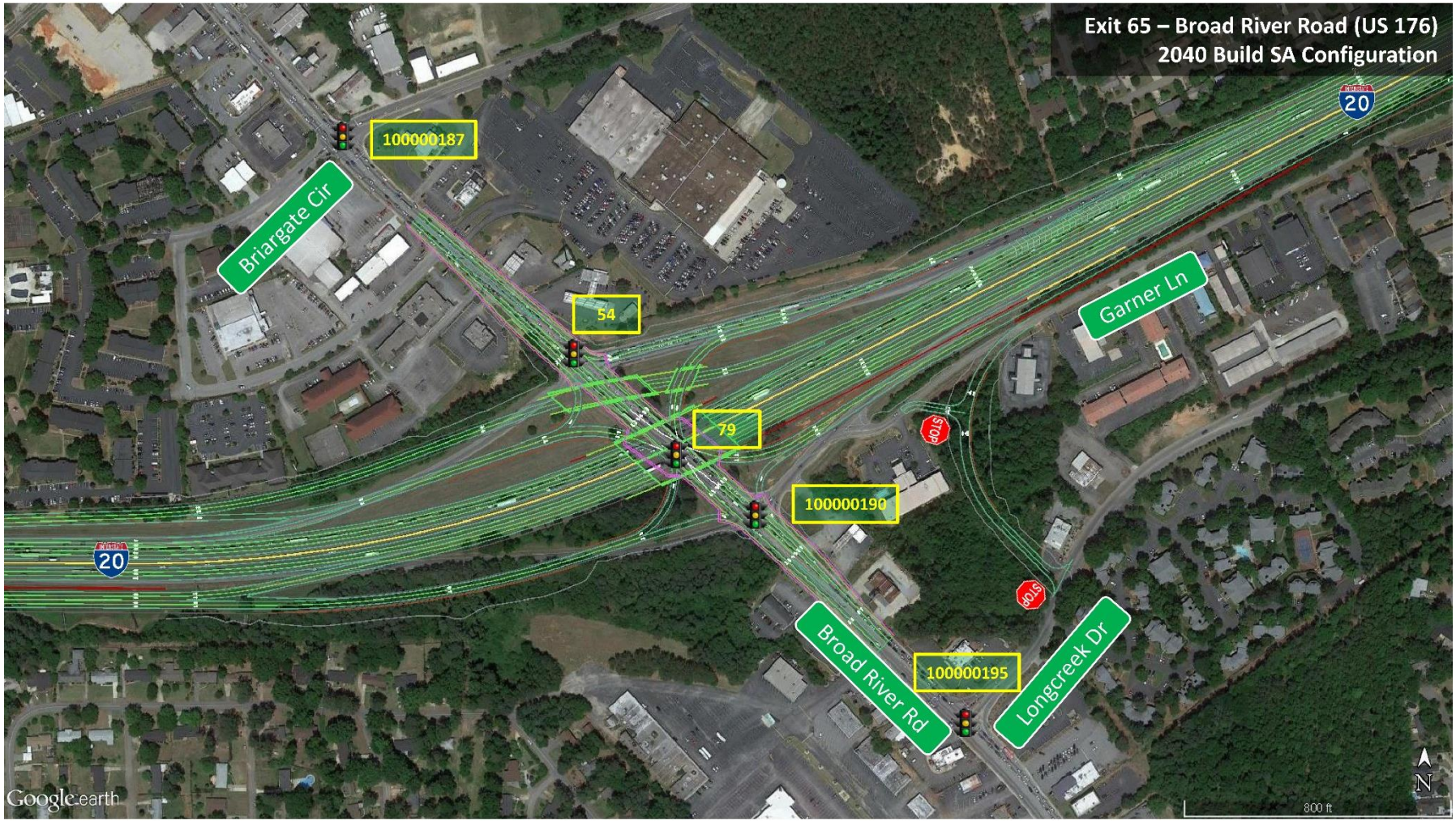

Figure 6-9 - Exit 65 - Broad River Road 2040 Build RRPA Configuration

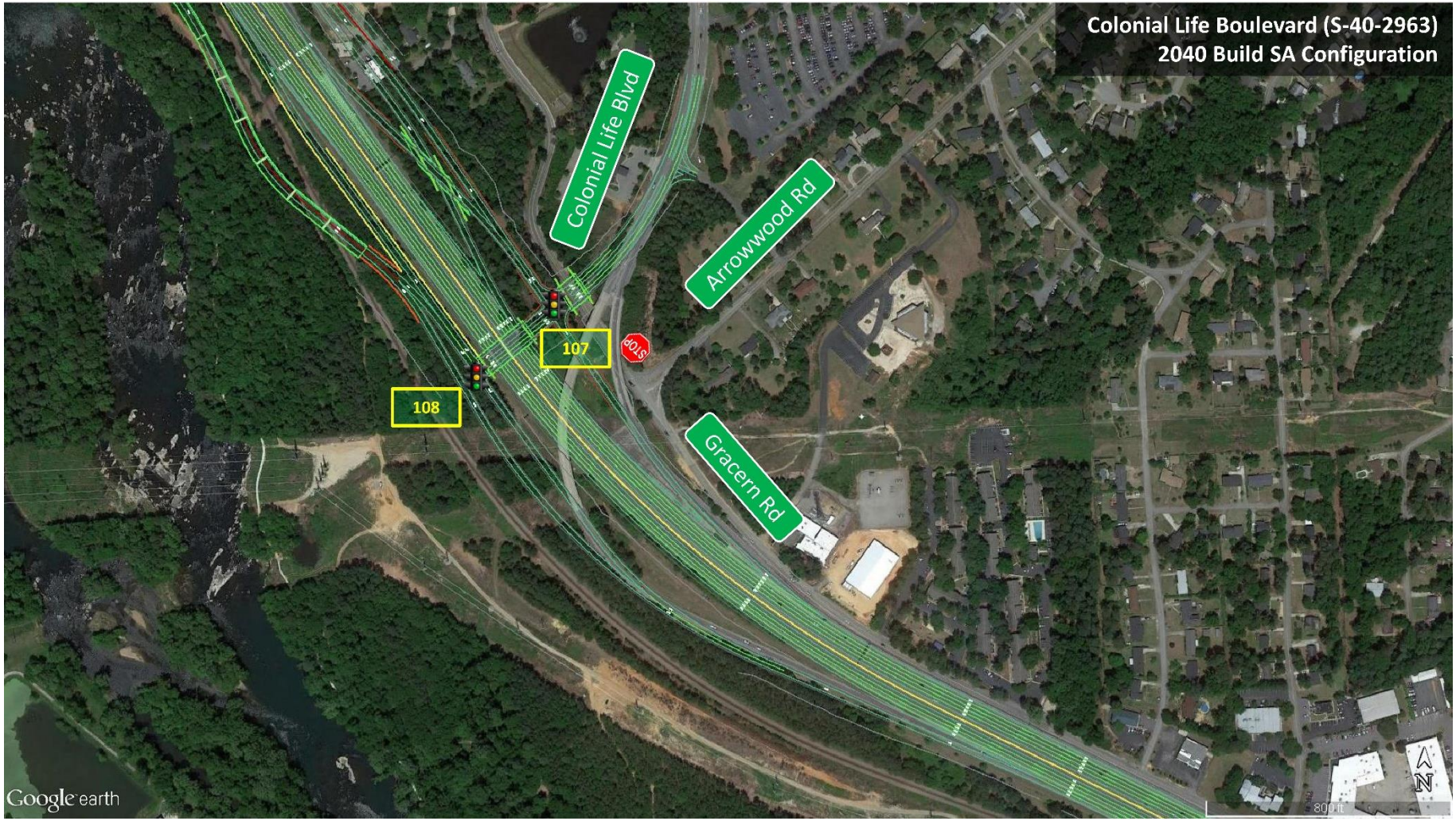

Figure 6-10 - Colonial Life Boulevard Interchange 2040 Build RRPA Configuration

7 Interchange Justification

A policy statement for justifying the need for additional or modified access to the existing sections of an Interstate System was first published in the Federal Register on October 22, 1990 entitled "Access to the Interstate System". It was then modified and updated on February 11, 1998, on August 27, 2009, and on May 22, 2017. The objections of this policy are to ensure that all new or revised access points do not adversely impact the operations and safety of the Interstate System, and all new or revised access points have been vetted through a systematic evaluation process.

In order to explain the intent and requirements of this new policy, FHWA published a Memorandum on May 22, 2017. This FHWA Guide was followed in preparing the current Interchange Modification Report (IMR) for the I-20/I-26/I-126 Interchange in Lexington and Richland Counties, South Carolina.

7.1 Policy Point 1

An operational and safety analysis has concluded that the proposed change in access does not have a significant adverse impact on the safety and operation of the Interstate facility (which includes mainline lanes, existing, new, or modified ramps, ramp intersections with crossroad) or on the local street network based on both the current and the planned future traffic projections. The analysis should, particularly in urbanized areas, include at least the first adjacent existing or proposed interchange on either side of the proposed change in access (23 CFR 625.2(a), 655.603(d) and 771.111(f)). The crossroads and the local street network, to at least the first major intersection on either side of the proposed change in access, should be included in this analysis to the extent necessary to fully evaluate the safety and operational impacts that the proposed change in access and other transportation improvements may have on the local street network (23 CFR 625.2(a) and 655.603(d)). Requests for a proposed change in access should include a description and assessment of the impacts and ability of the proposed changes to safely and efficiently collect, distribute, and accommodate traffic on the Interstate facility, ramps, intersection of ramps with crossroad, and local street network (23 CFR 625.2(a) and 655.603(d)). Each request should also include a conceptual plan of the type and location of the signs proposed to support each design alternative (23 U.S.C. 109(d) and 23 CFR 655.603(d)).

The intent of Policy Point 1 is to require detailed operational and safety analysis of the relevent interstate segments and provide a comparison of the no-build and build conditions that are anticipated to occur through the design year of the project.

The analysis of the I-20, I-26, and I-126 interstate facilities, the I-20/I-26 system interchange (Exit 64/Exit 107), the I-26/I-126 system interchange (Exit 108), and the adjacent and closely interconnected interchanges at I-20 Exits 63 and 65, I-26 Exit 106, and the I-126 interchange at Coloinal Life Boulevard is an extension of the previous project wide traffic operations and safety analyses as summarized in the *Alternatives Traffic Analysis: Carolina Crossroads I-20/I-26/I-126 Corridor Project, Crash Analysis: Carolina Crossroads I-20/I-26/I-126 Corridor Project*.

The analysis of the interstate facilities includes the portion of I-20 between the crossings of the Saluda River and Broad River, the portion of I-26 between Exit 103 (Piney Grove Road) and Exit 110 (US 378), and the portion of I-

126 between I-26 and the interchange at Greystone Boulevard, and includes the proposed modification of the system interchanges of I-20/I-26 (Exit 64/Exit 107) and of I-26/I-126 (Exit 108), and the services interchanges at Exit 106 (St Andrews Road), Exit 63 (Bush River Road), Exit 64 (Broad River Road) and Colonial Life Boulevard. The analysis was performed using methodologies and procedures outlined in the Transportation Research Board's *Highway Capacity Manual* and used the TransModeler micro-simulation modeling software.

The Refined Recommended Preferred Alternative (RRPA) replaces the existing full cloverleaf I-20/I-26 system interchange with a directional turbine interchange, eliminating the four short congested weaving sections between the heavily traveled loop ramps. The RRPA also revises the I-26/I-126 system interchange to provide improved continuity for traffic traveling on I-26. The proposed collector-distributor system relocates from the mainline facilities the many complex, multi-lane weaving areas and the merge and diverge movements to and from the adjacent service interchanges at Exit 106, Exit 63, and Exit 65. The collector distributor road system eliminates multiple existing conflict points with mainline traffic, improving safety and operations on the interstate routes.

The analysis of the 2040 Build condition of the RRPA illustrates that the project would not have any significant negative impact on the safety and the operation of the facilities within the project area. The increased capacity provided by the RRPA will result in generally comparable LOS in the morning and afternoon peak hours compared to the Existing Conditions, and improved LOS over the 2040 No-Build conditions.

Exit 106 (St Andrews Road), the interchange adjacent to, and to the north of, the I-20/I-26 system interchange, is proposed to be modified to provide a Single Point Urban Interchange. Exit 104 (Piney Grove Road), the next adjacent interchange to the west of Exit 106, is not expected to be modified as part of this project. Exit 104 is located approximately two miles west of the Exit 106 interchange. There are no anticipated operations concerns related to the spacing between the two interchanges. Sufficient distance exists between upstream and downstream merging/diverging areas at the adjacent interchanges to eliminate the influence of traffic movements within these areas. The analysis shows the eastbound freeway segments are projected to operate at LOS D and LOS C in the during the morning and afternoon peak hours, respectively. In the westbound direction, the freeway segment is expected to operate at LOS D and LOS F during the morning and afternoon peak hours, respectively. However, the density of these segments in the RRPA are generally better than the density of the same segments under existing conditions.

Exit 110 (US 378), the interchange adjacent to, and to the south of, the I-26/I-126 system interchange, is not proposed to be modified from its existing Single Point Urban Interchange configuration. However, due to extensive recurring queuing on the westbound off-ramp, the deceleration lane is proposed to be extended by approximately 2,500 feet as part of this project. The spacing between the relocated diverge area and merge area (from the I-126 westbound fly-over ramp) has been shortened to about 2,500 feet which is sufficient and will not adversely affect mainline and ramp operations. All freeway, merge and diverge areas in the eastbound direction between the I-126 westbound fly-over on ramp and the Exit 110 off-ramp operate at LOS D or better during both the morning and afternoon peak hours.

Exit 63 (Bush River Road), the interchange adjacent to, and to the west of, the I-20/I-26 system interchange, is proposed to be modified to provide a Diverging Diamond Interchange. Exit 61 (US 1), the next adjacent interchange to the west of Exit 63, is not expected to be modified as part of this project. Exit 61 is located approximately 2.1 miles west of Exit 63 and is west of the Saluda River crossing that makes up the western Carolina Crossroads study area limits on I-20. There is a potential project outside of the Carolina Crossroads improvements that may extend the deceleration lane for the westbound off-ramp to Exit 61. The Exit 61 westbound off-ramp, outside of the project limits, may substantially affect the westbound mainline density and Exit 63 westbound merge operations due to high ramp volumes and congestion identified along the Exit 61 arterial.

Exit 65 (Broad River Road), the interchange adjacent to, and to the east of, the I-20/I-26 system interchange is proposed to be modified to provide a Single Point Urban Interchange. Exit 68 (Monticello Road), the next adjacent interchange to the east of Exit 65, is not expected to be modified as part of the project. Exit 68 is located approximately 3.2 miles east of Exit 65 and is east of the Broad River crossing that makes up the eastern Carolina Crossroads study area limits on I-20. Because of the distance between Exits 65 and 68, and the bridge crossing the Broad River creating a barrier, and that the widening of I-20 ends east of the Broad River crossing, FHWA and SCDOT agreed that the Exit 68 interchange would not influence operations at Exit 65. However, with increased volumes and improved throughput within the system-to-system interchange, heavy queuing and ramp backup along I-20 eastbound was identified, due to the mainline capacity constraint that occurs at the eastern project limits as the proposed four lane section transitions into the existing three lane section at the bridge across Broad River just east of Exit 65.

The Colonial Life Boulevard interchange on I-126 is the interchange adjacent to, and to the south of the I-26/I-126 interchange. This interchange is proposed to be modified from the eastern-oriented partial interchange to a full access interchange. The interchange at Greystone Boulevard is the next adjacent interchange and is located about one mile east of the Colonial Life Boulevard interchange. Sufficient distance will be provided between the upstream and downstream merging/diverging areas at the adjacent interchanges to eliminate the influence of traffic movement within these areas.

The *Crash Analysis: Carolina Crossroads I-20/I-26/I-126 Corridor Project* identified a total of 3,351 crashes occurring between January 1, 2012 and December 31, 2014 along the three interstate routes within the study area.

I-26 experienced the most crashes within the study area. A total of 2,370 crashes occurred along I-26. There were 796 crashes along I-20. I-126 experienced the fewest crashes, with 185 crashes. Along I-20 and I-26, rear end collisions (about 62 percent) were most frequent, followed by same direction sideswipe accidents (approximately 18 percent) and no collision with motor vehicle (approximately 17 percent). Rear end collisions were also the most frequent type of collision (approximately 44 percent) along I-126. However, the no collision with motor vehicle crashes on I-126 were about double (approximately 31 percent) the percentage of similar type collisions reported on I-26 (about 17 percent) and I-20 (about 14 percent).

There were 609 crashes resulting in injury (about 18 percent). Twelve crashes resulted in fatalities. Of the 12 fatal crashes along the interstate routes within the study area, seven took place along I-26, three on I-20, and two on I-126.

The recurring congestion, the close spacing of the service interchanges adjacent to the I-20/I-26 and I-26/I-126 system interchanges, and the multiple complex weaving movements within and adjacent to the system interchanges contribute to the frequency of crashes within the study area. The proposed interchange improvements at the system interchanges and the addition of the collector-distributor road systems along I-20 and I-26 should improve safety and improve traffic operations by removing the numerous existing vehicle conflict points and relocating merge/diverge areas and weaving sections within the study area from the mainline lanes to the collector-distributor lanes. By removing the Bush River Road ramps at Exit 108, the short weaving section between the ramp from eastbound I-20 to eastbound I-26 and the eastbound off-ramp to Exit 108 is eliminated. The congestion caused by the complex westbound weaving movements to travel to I-20 and to Exit 106 after I-126 merges with I-126 is also eliminated.

Pedestrian facilities will be incorporated into the proposed service interchanges at Exits 106, 63 and 65.

A conceptual signing plan for the RRPA is provided in **Appendix F**.

7.2 Policy Point 2

The proposed access connects to a public road only and will provide for all traffic movements. Less than "full interchanges" may be considered on a case-by-case basis for applications requiring special access, such as managed lanes (e.g., transit, HOVs, HOT lanes) or park and ride lots. The proposed access will be designed to meet or exceed current standards (23 CFR 625.2(a), 625.4(a)(2), and 655.603(d)). In rare instances where all basic movements are not provided by the proposed design, the report should include a full-interchange option with a comparison of the operational and safety analyses to the partial-interchange option. The report should also include the mitigation proposed to compensate for the missing movements, including wayfinding signage, impacts on local intersections, mitigation of driver expectation leading to wrong-way movements on ramps, etc. The report should describe whether future provision of a full interchange is precluded by the proposed design.

The intent of Policy Point 2 is to require implementation of interchange design for interstate acces that allows for all relevant movements for general purpose traffic, whenever feasible.

The existing system interchanges at I-20/I-26 (Exit 64/Exit 107) and at I-26/I-126 (Exit 108) provide for all traffic movements between the respective interstate routes. The proposed modificaitons of the system interchanges will continue to provide for all traffic movements between the interstate routes.

The existing service interchanges at Exit 106, Exit 63, and Exit 65 currently provide full access for all traffic movements. As illustrated by the design concepts for these interchanges, the proposed modifications to Exits 106, 63, and 65 will continue to provide full access for all traffic movements.

The existing configuration of the Exit 106 westbound off-ramp will be continued in the proposed interchange configuration. The proximity along St Andrews Road of the westbound off-ramp intersection and the Fernandina Road/Burning Tree Road frontage road intersection makes it desireable to maintain the connection from the off-ramp to Burning Tree Road and a separate connection to eastbound St Andrews Road. The ramp connecting to Burning Tree Road will continue to provide access to the south on Burning Tree Road, and to encourage safer access to northbound Fernandina Road.

Appendix A—Existing Peak Hour Volumes

Balanced 2015 Existing
Peak Hour Volumes

Carolina Crossroads
Existing Interchange Volumes

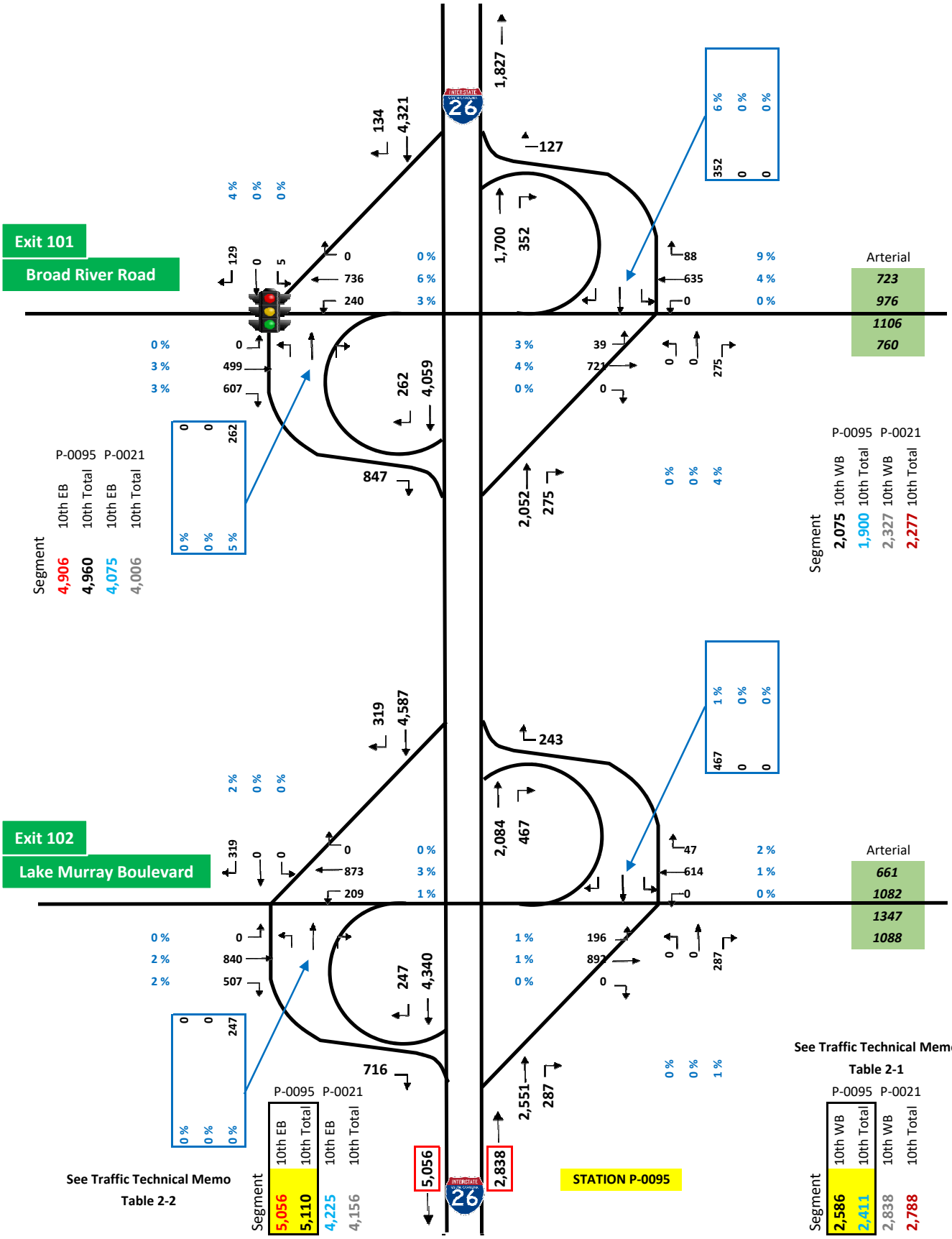

AM MAINLINE VOLUME BALANCING

Carolina Crossroads
Existing Interchange Volumes

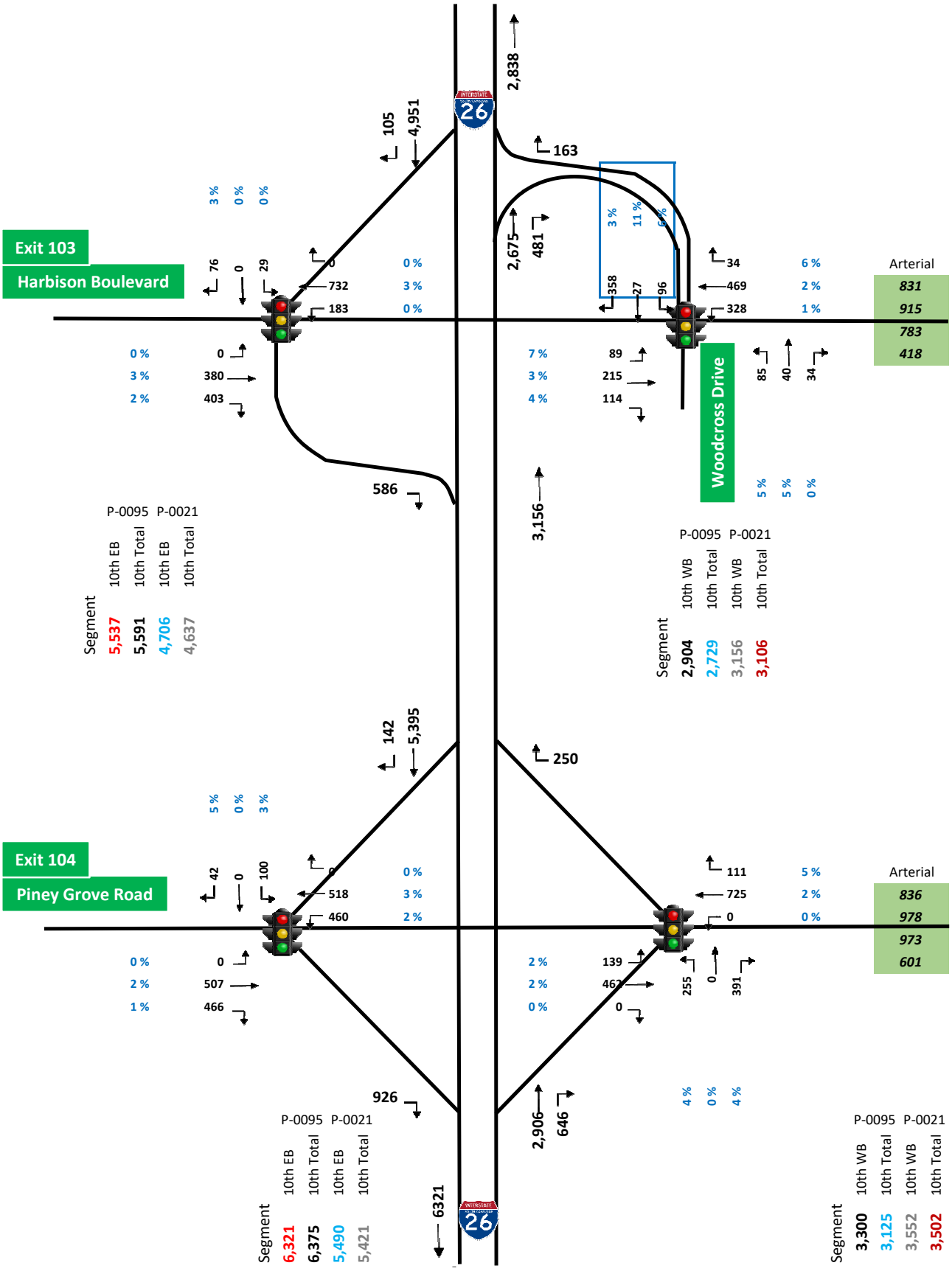

AM MAINLINE VOLUME BALANCING

Carolina Crossroads
Existing Interchange Volumes

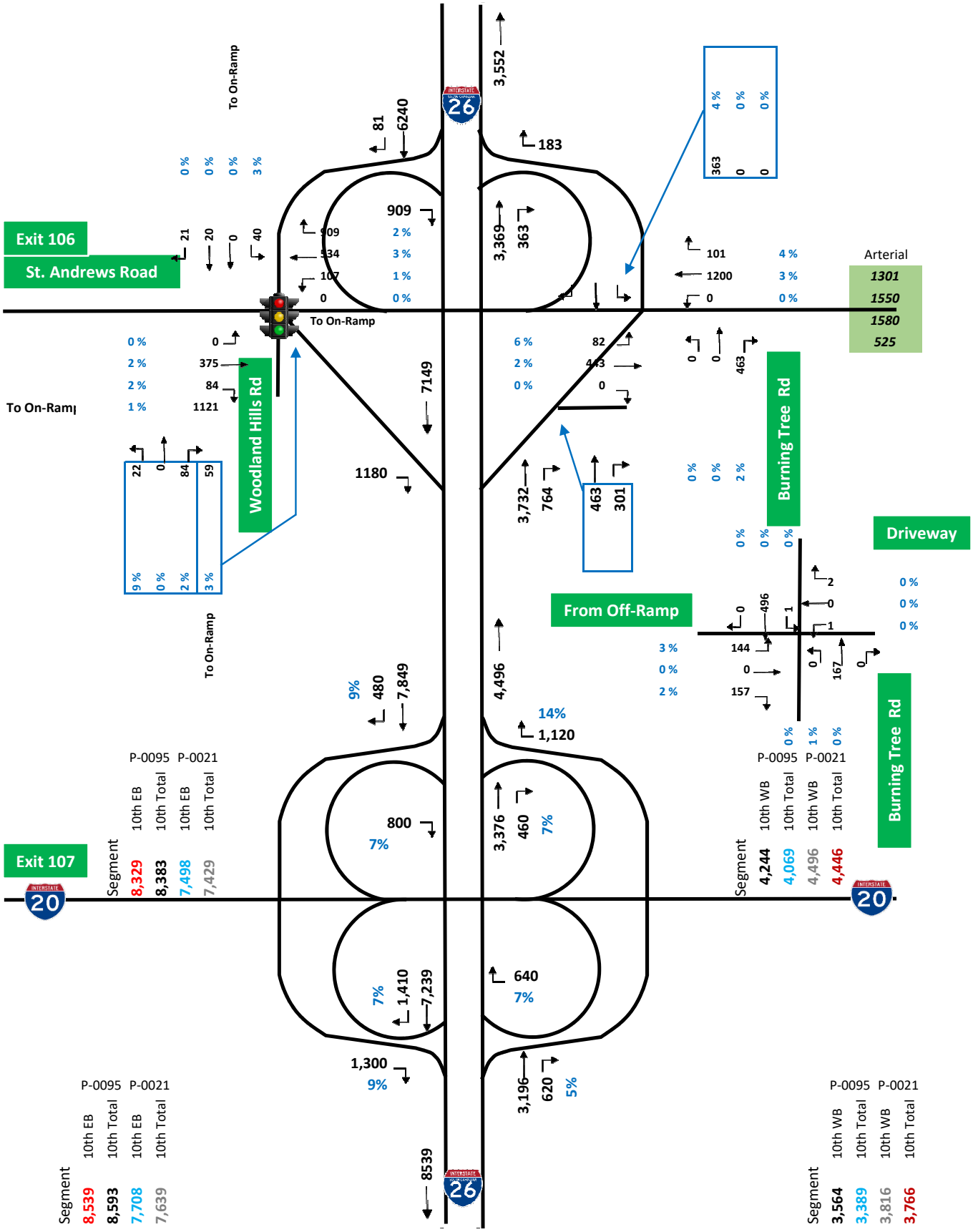

AM MAINLINE VOLUME BALANCING

Carolina Crossroads
Existing Interchange Volumes

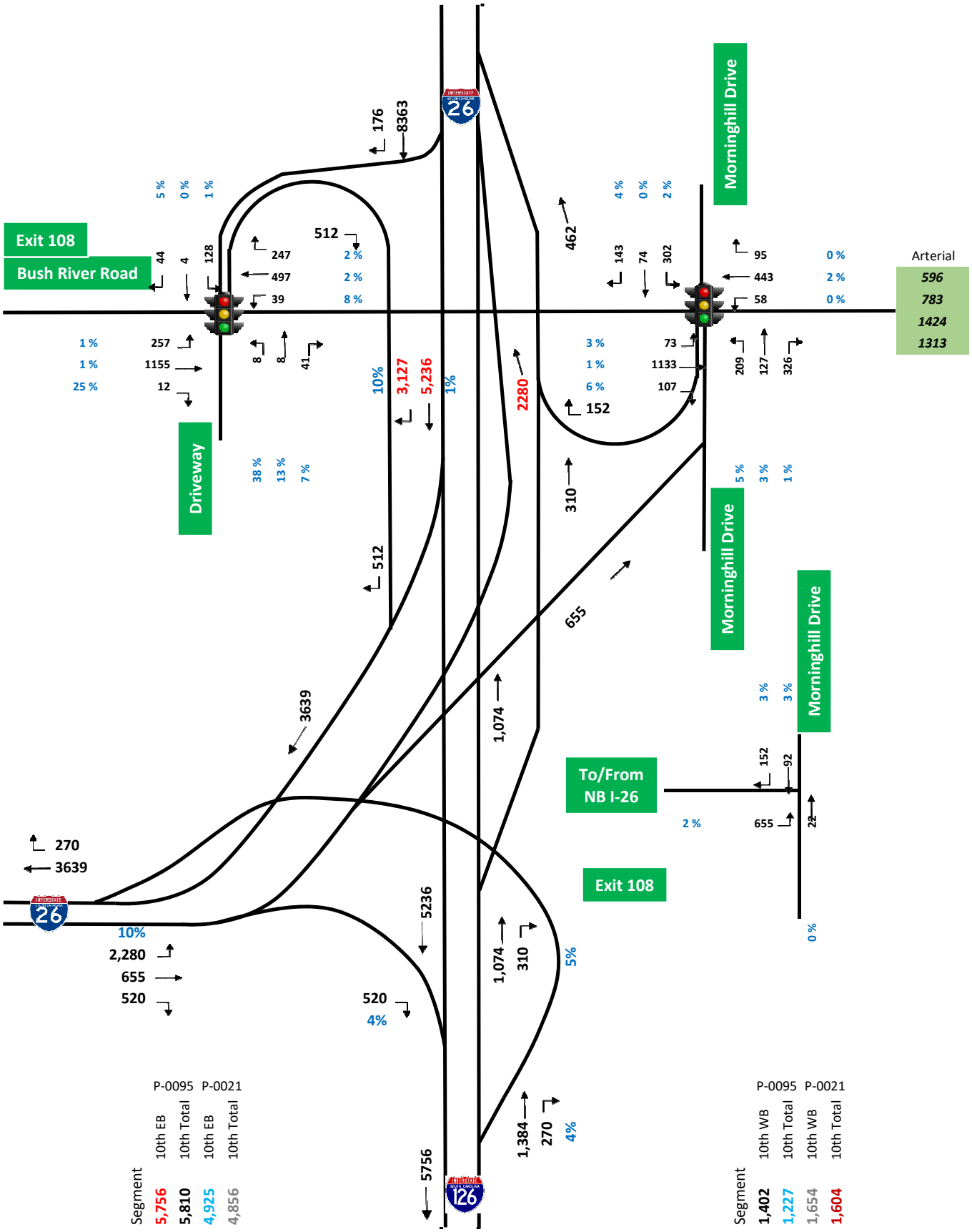

Segment	P-0095 10th EB	P-0095 10th Total	P-0021 10th EB	P-0021 10th Total
	5,756	5,810	4,925	4,856

Segment	P-0095 10th WB	P-0095 10th Total	P-0021 10th WB	P-0021 10th Total
	1,402	1,227	1,654	1,604

AM MAINLINE VOLUME BALANCING

Carolina Crossroads
Existing Interchange Volumes

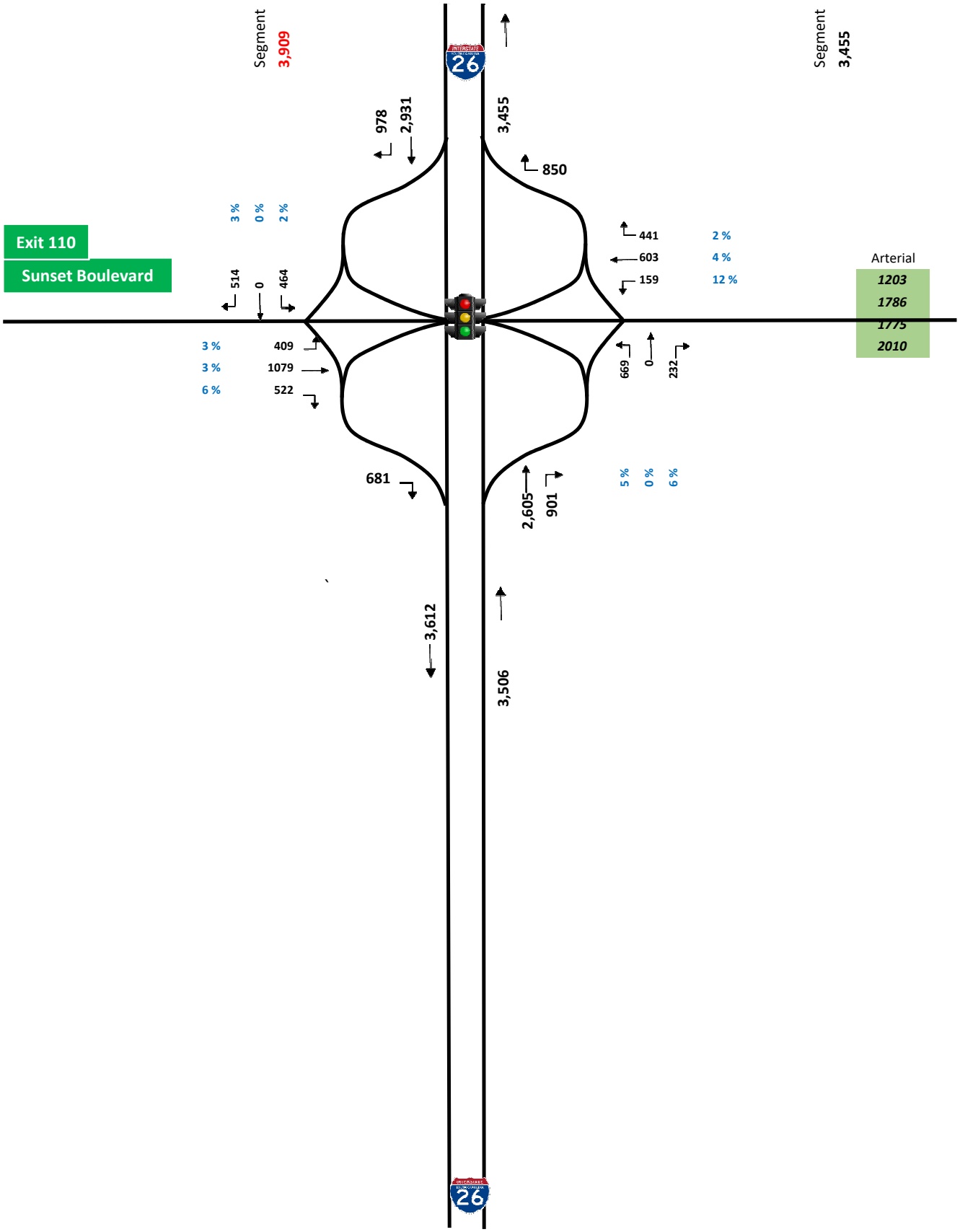

AM MAINLINE VOLUME BALANCING

Carolina Crossroads
Existing Interchange Volumes

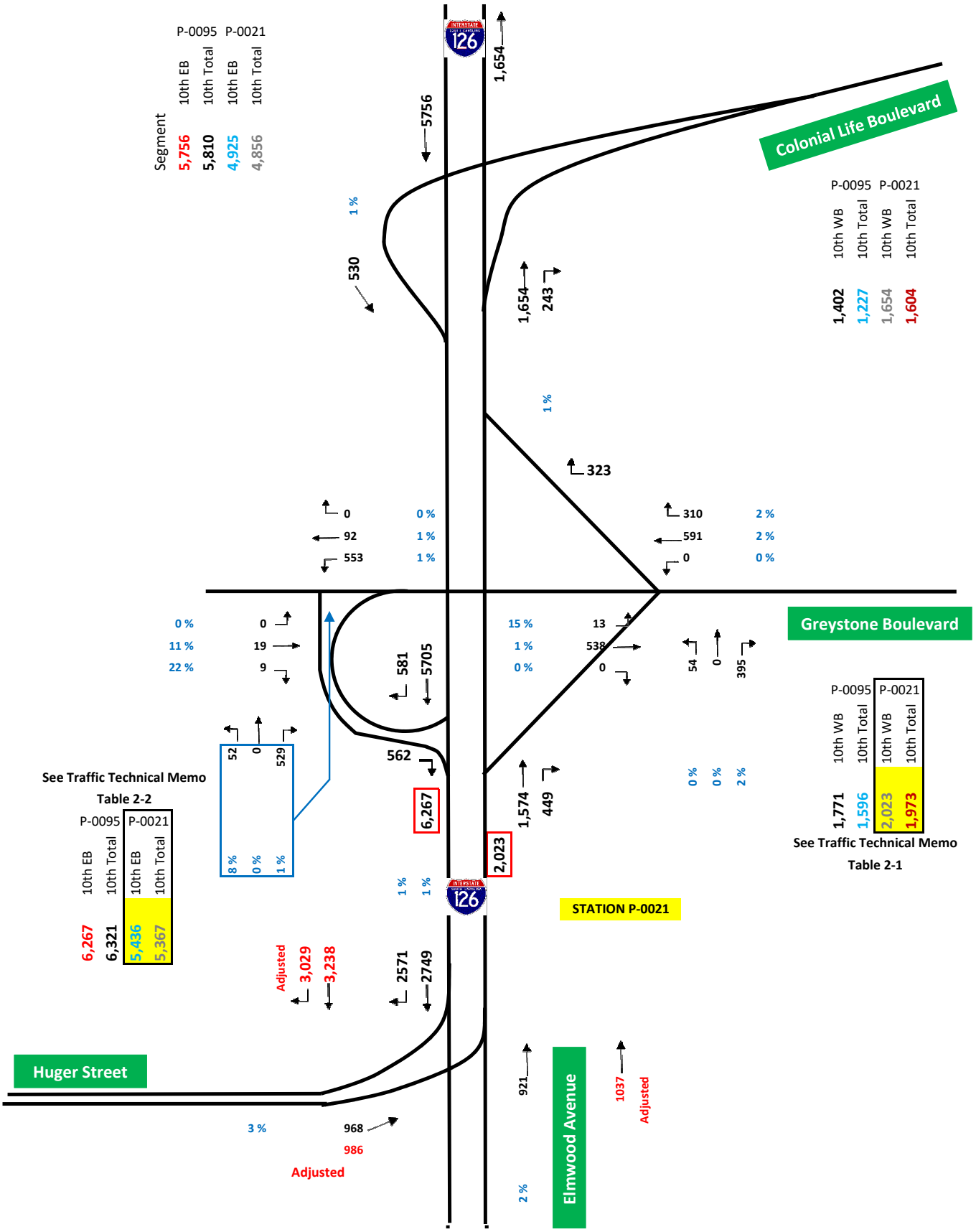

AM MAINLINE VOLUME BALANCING

Carolina Crossroads
Existing Interchange Volumes

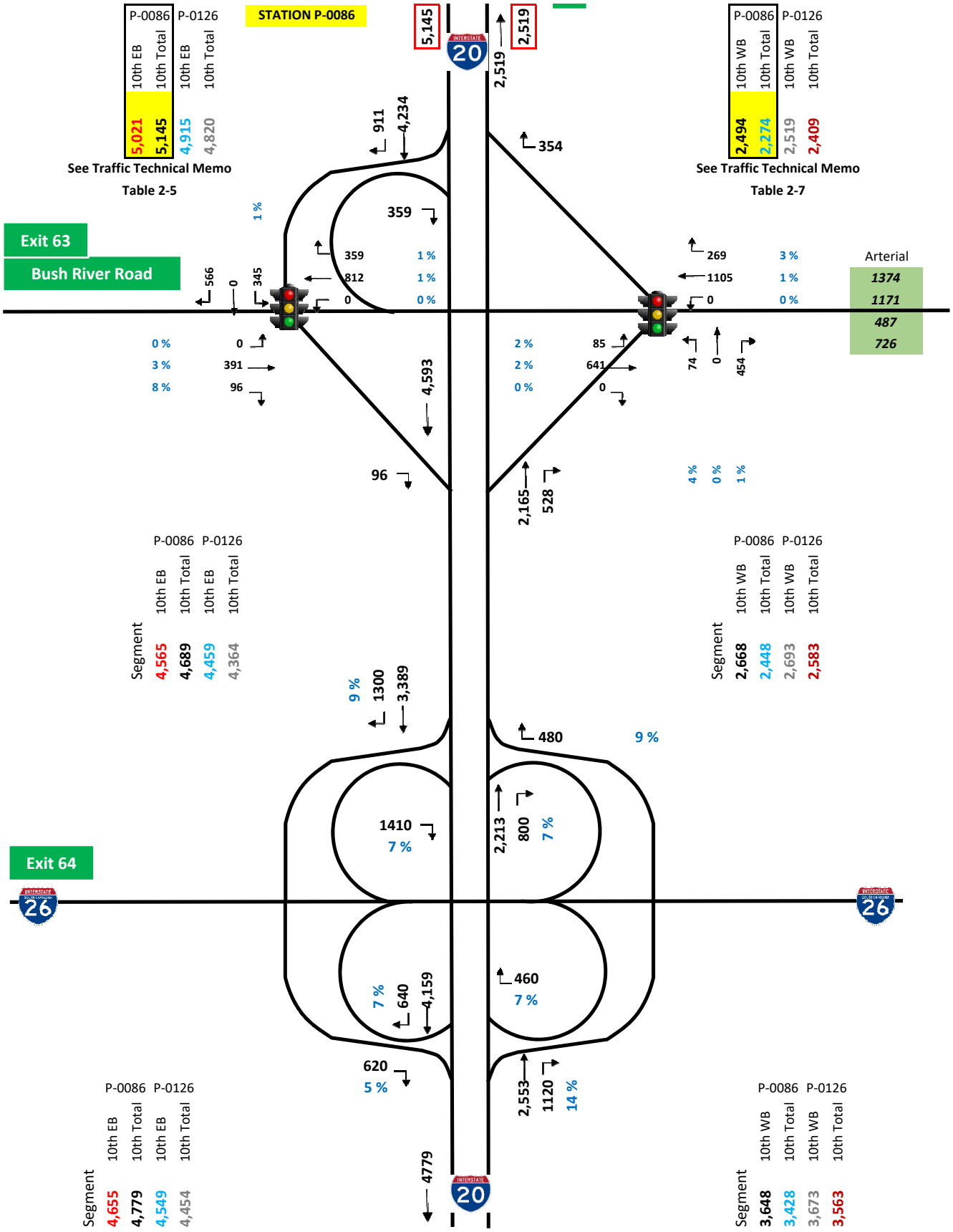

AM MAINLINE VOLUME BALANCING

Carolina Crossroads
Existing Interchange Volumes

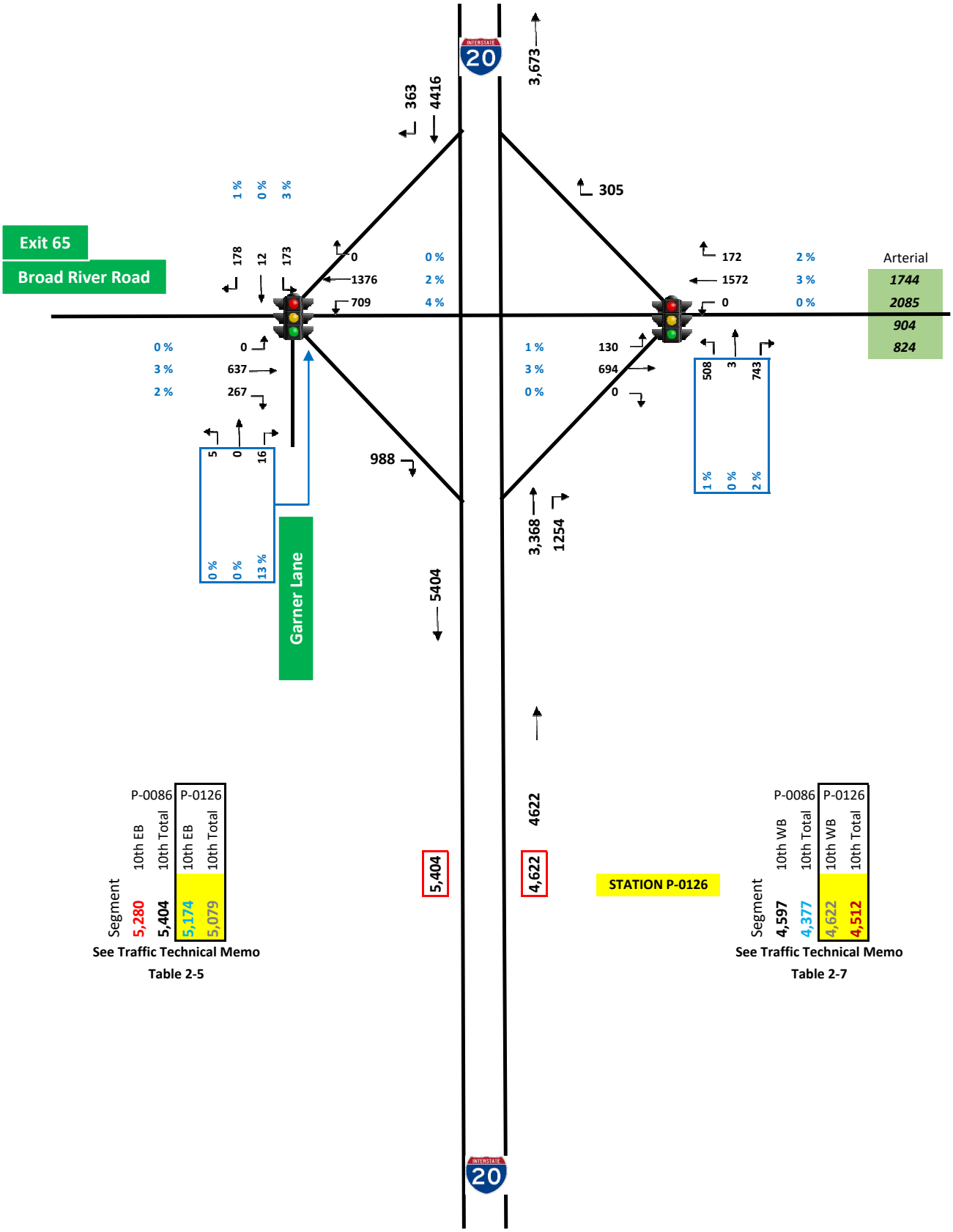

Segment	P-0086 10th EB	P-0086 10th Total	P-0126 10th EB	P-0126 10th Total
	5,280	5,404	5,174	5,079

See Traffic Technical Memo
Table 2-5

Segment	P-0086 10th WB	P-0086 10th Total	P-0126 10th WB	P-0126 10th Total
	4,597	4,377	4,622	4,512

See Traffic Technical Memo
Table 2-7

AM MAINLINE VOLUME BALANCING

Carolina Crossroads
Existing Interchange Volumes

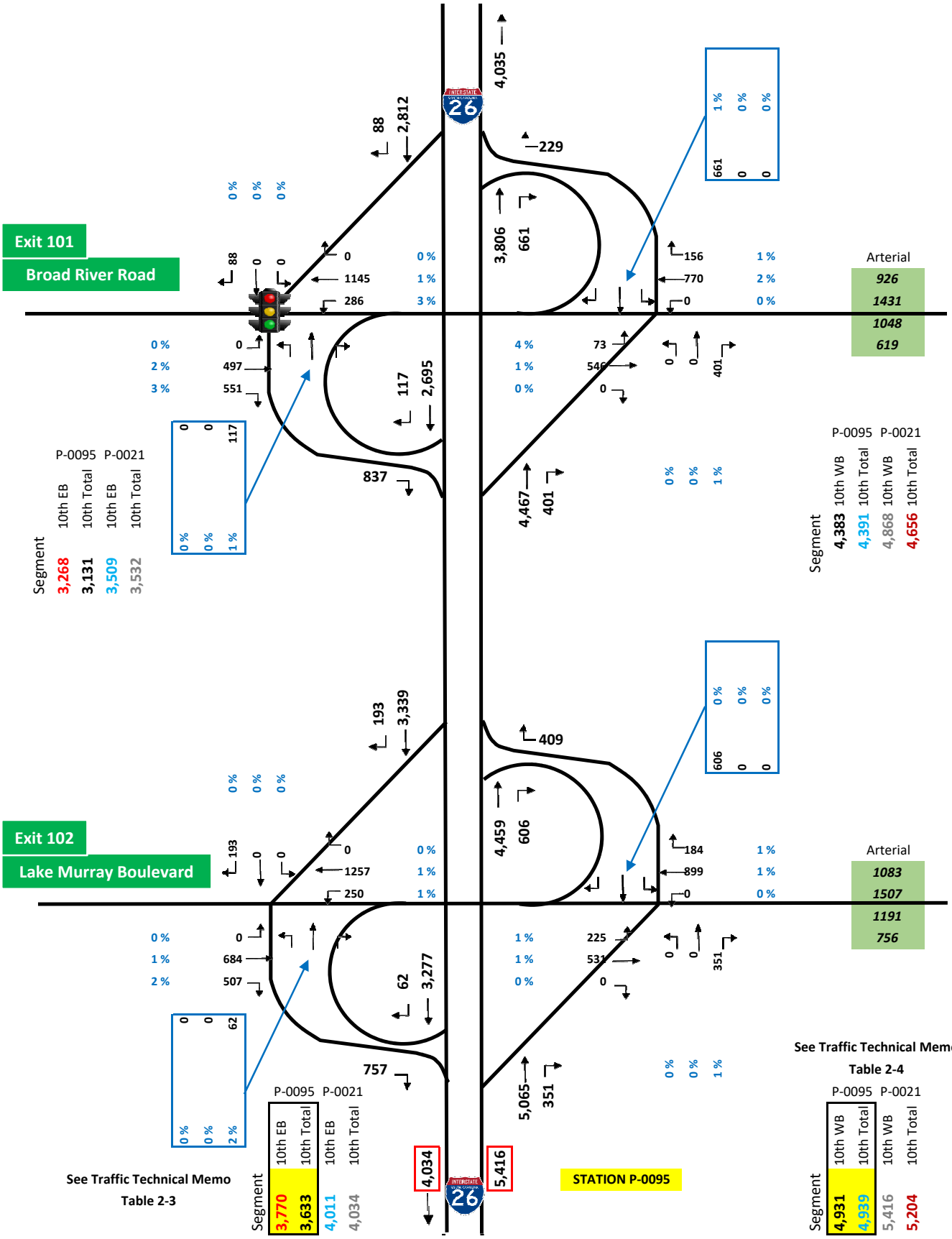

PM MAINLINE VOLUME BALANCING

Carolina Crossroads
Existing Interchange Volumes

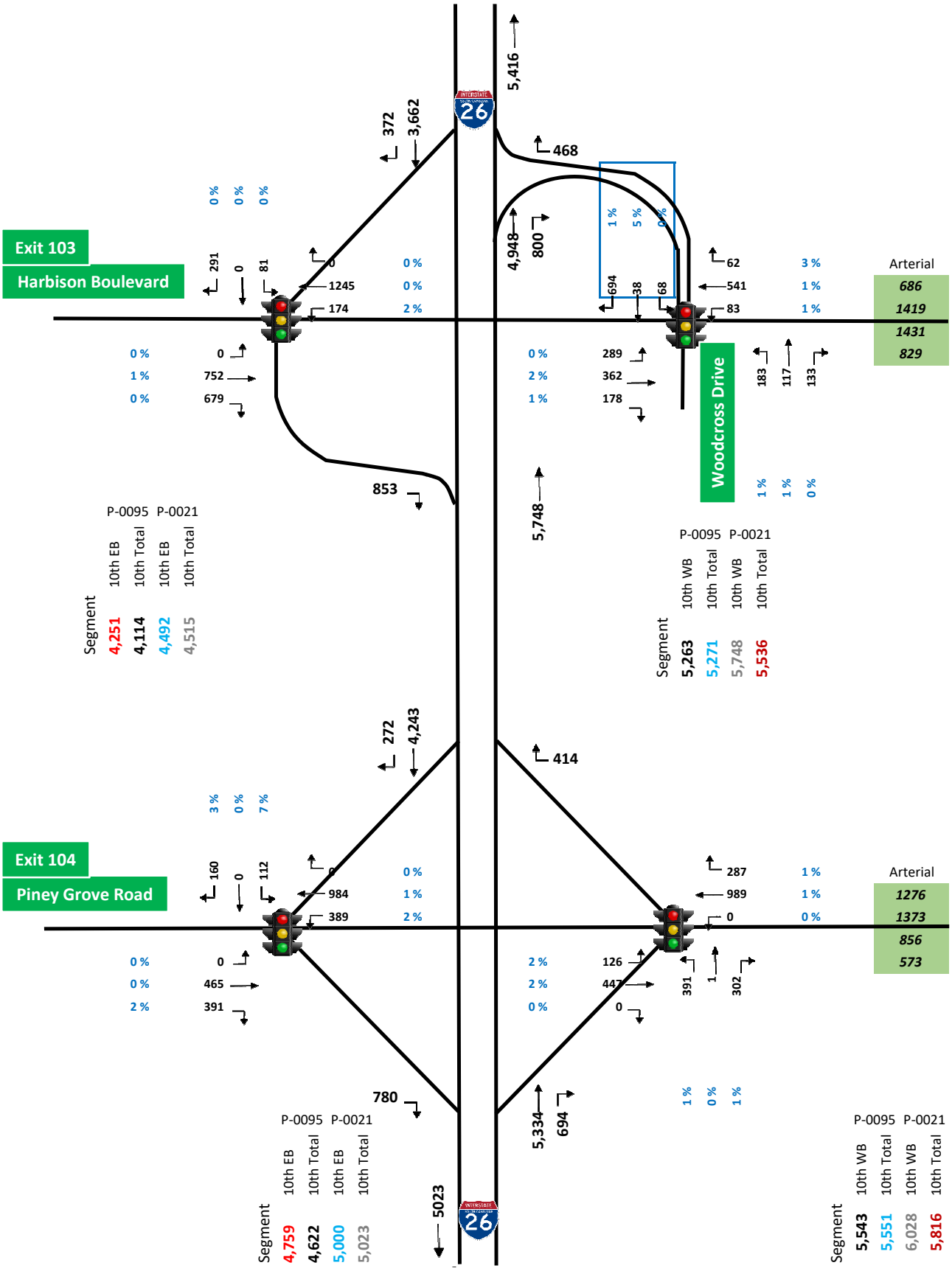

PM MAINLINE VOLUME BALANCING

Carolina Crossroads
Existing Interchange Volumes

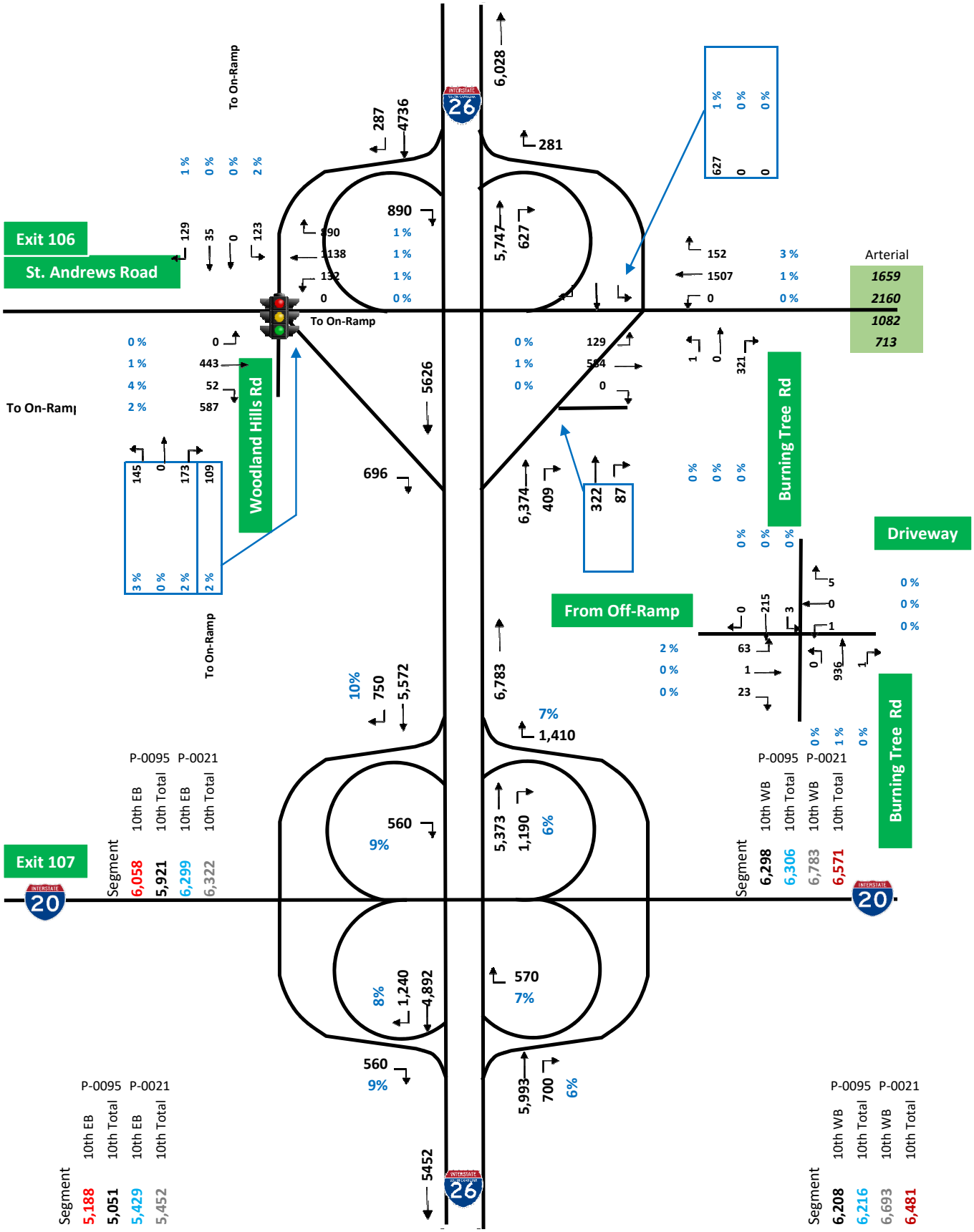

PM MAINLINE VOLUME BALANCING

Carolina Crossroads
Existing Interchange Volumes

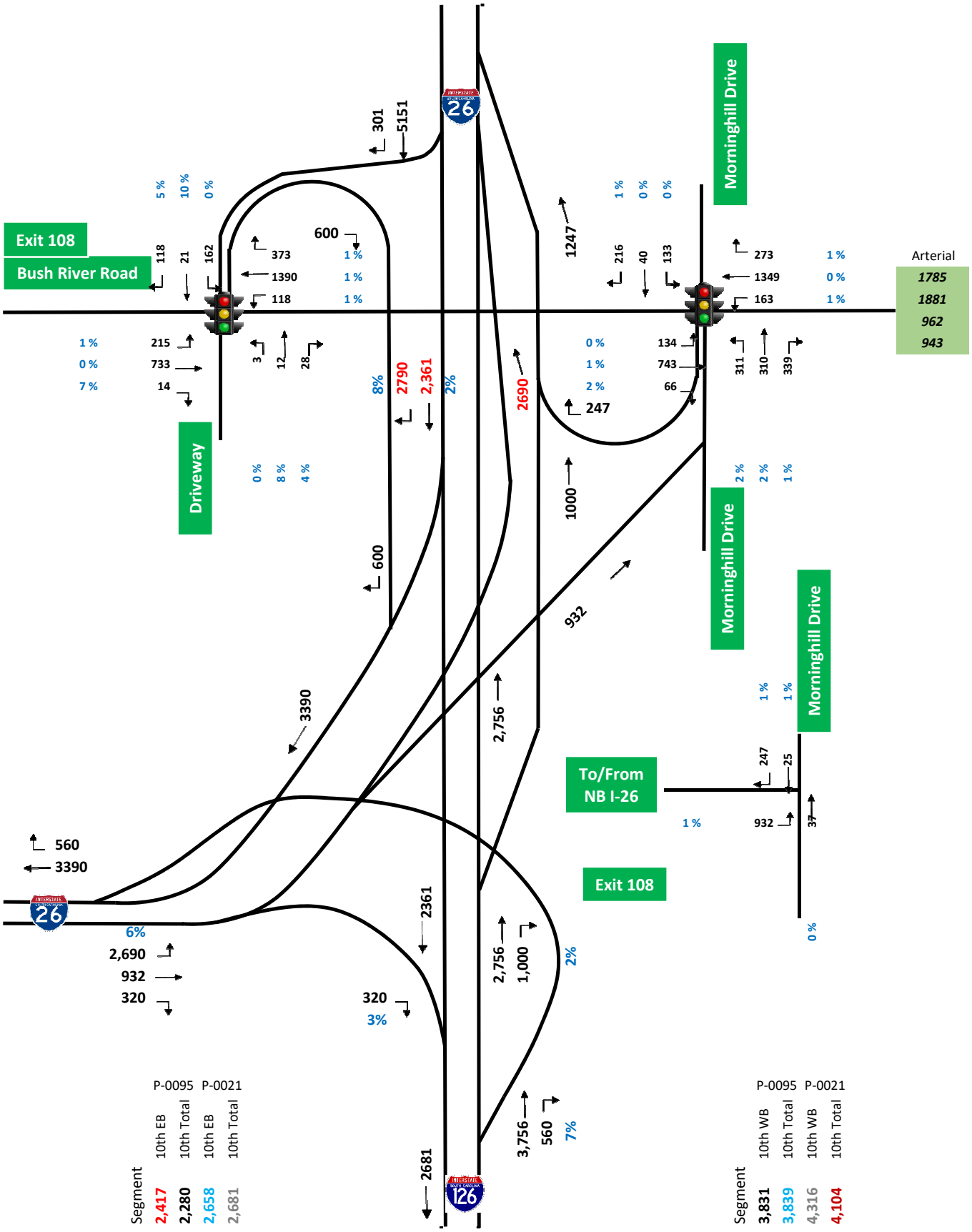

PM MAINLINE VOLUME BALANCING

Carolina Crossroads
Existing Interchange Volumes

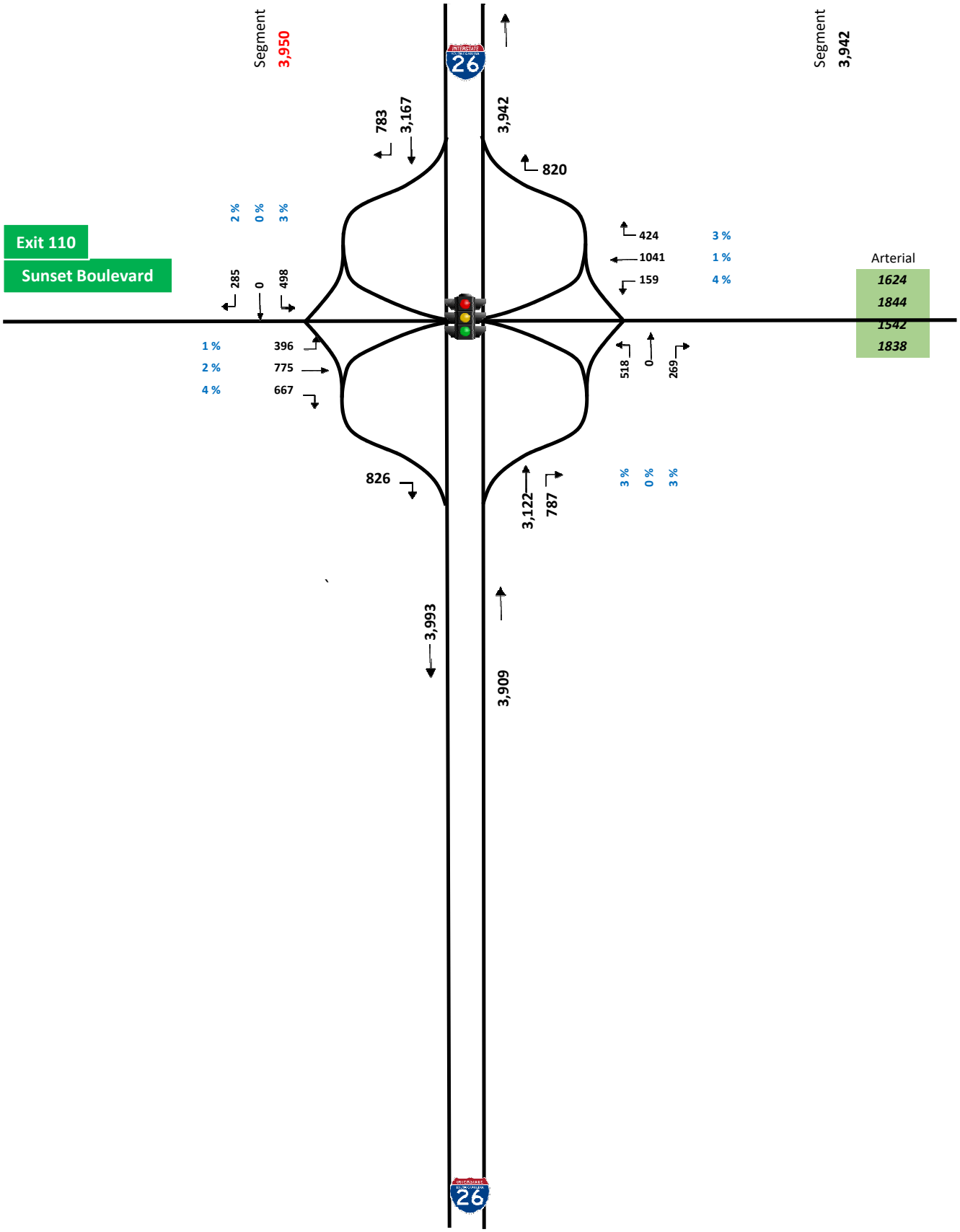

PM MAINLINE VOLUME BALANCING

Carolina Crossroads
Existing Interchange Volumes

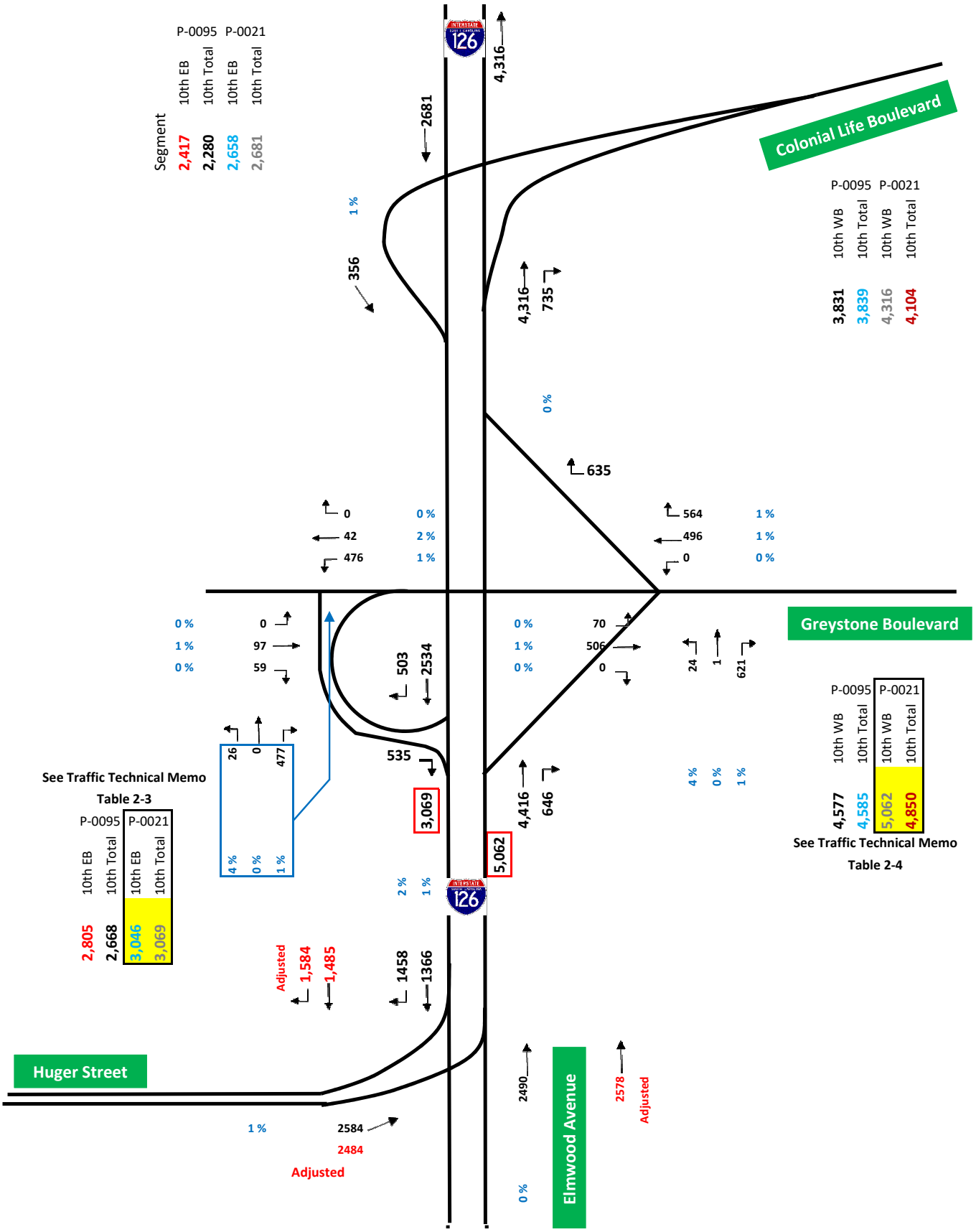

PM MAINLINE VOLUME BALANCING

Carolina Crossroads
Existing Interchange Volumes

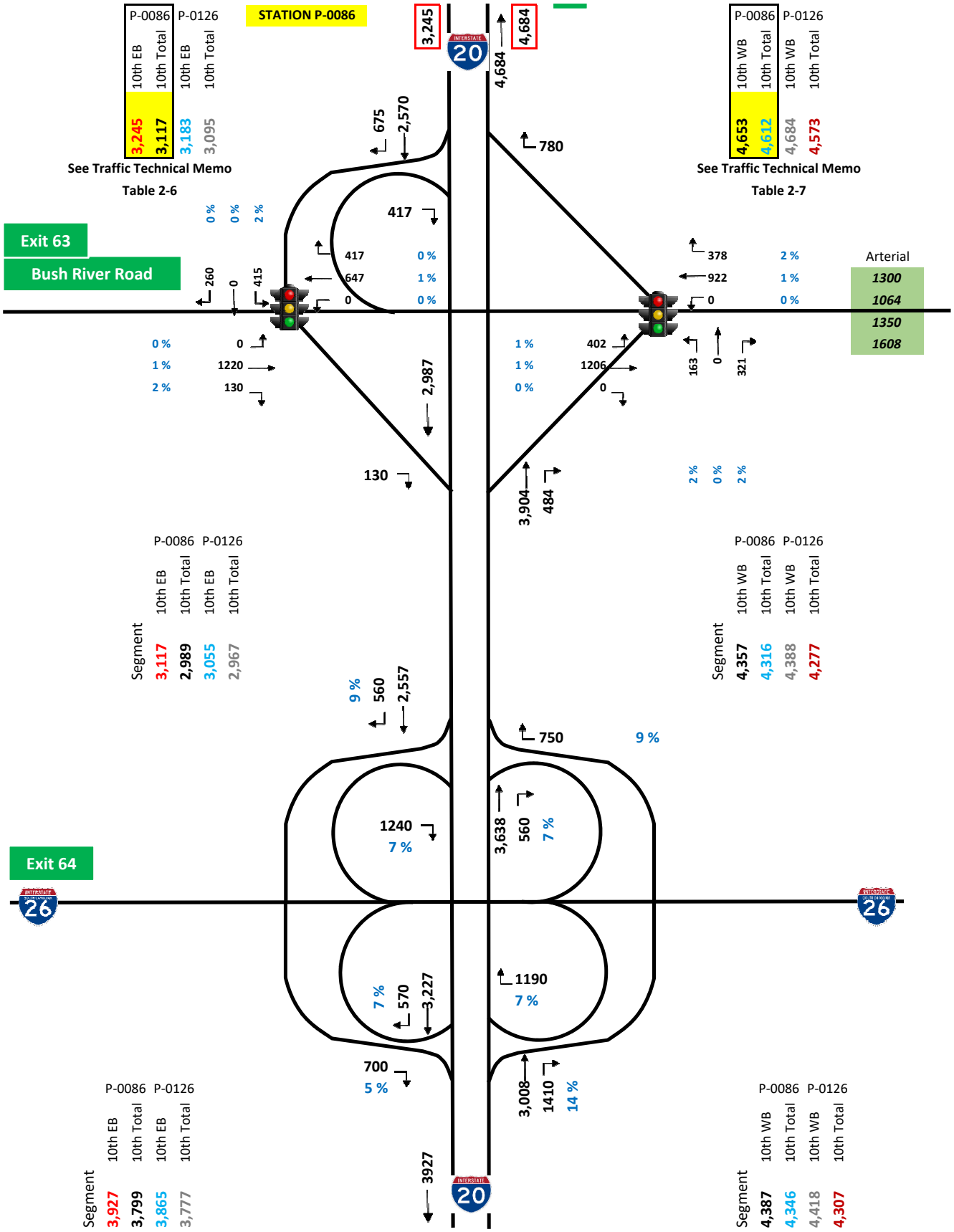

PM MAINLINE VOLUME BALANCING

Carolina Crossroads
Existing Interchange Volumes

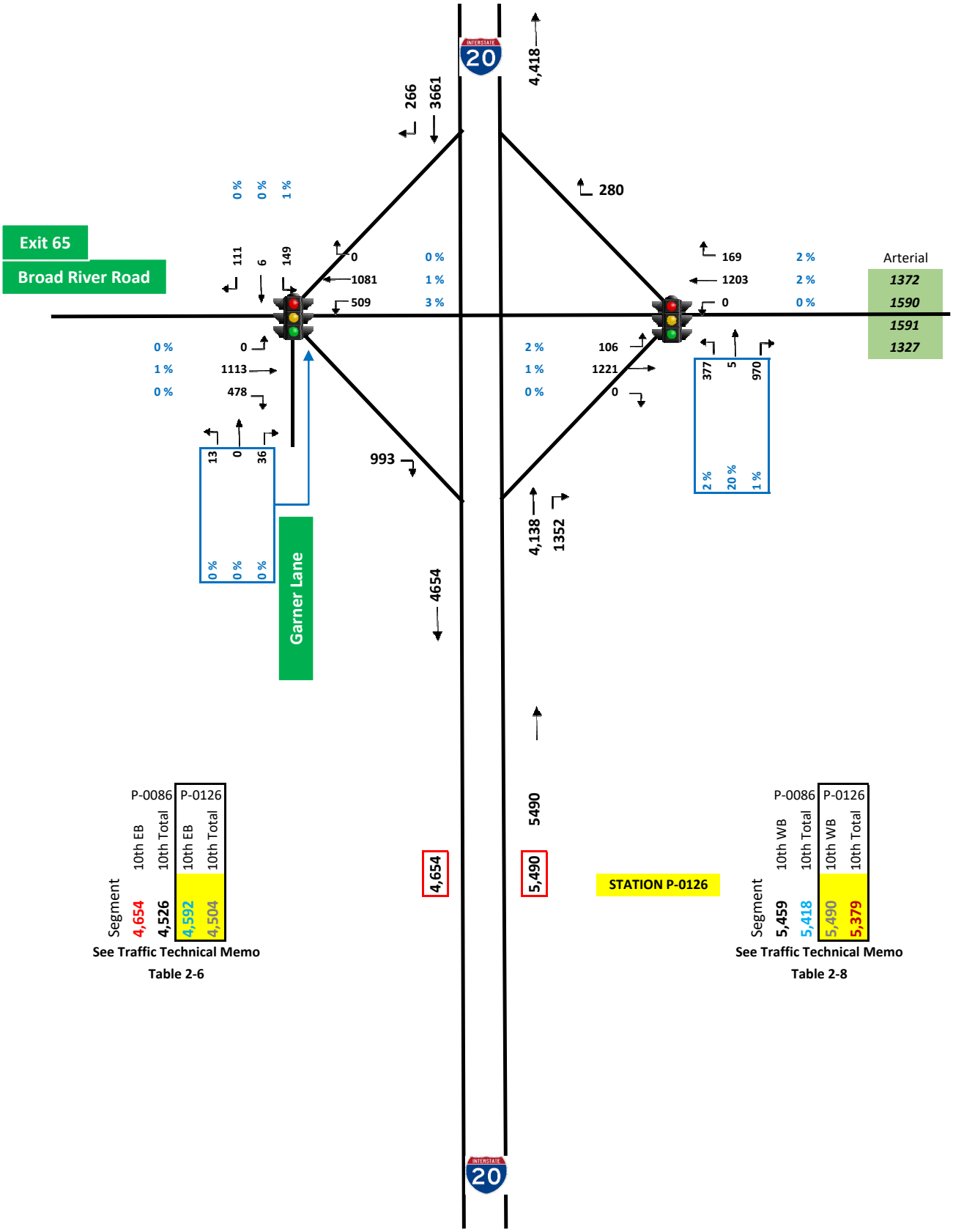

Segment	P-0086 10th EB	P-0086 10th Total	P-0126 10th EB	P-0126 10th Total
	4,654	4,526	4,592	4,504

See Traffic Technical Memo
Table 2-6

Segment	P-0086 10th WB	P-0086 10th Total	P-0126 10th WB	P-0126 10th Total
	5,459	5,418	5,490	5,379

See Traffic Technical Memo
Table 2-8

PM MAINLINE VOLUME BALANCING

TransModeler Network
2015 Existing Peak Hour
Volumes

Carolina Crossroads
Existing Interchange Volumes

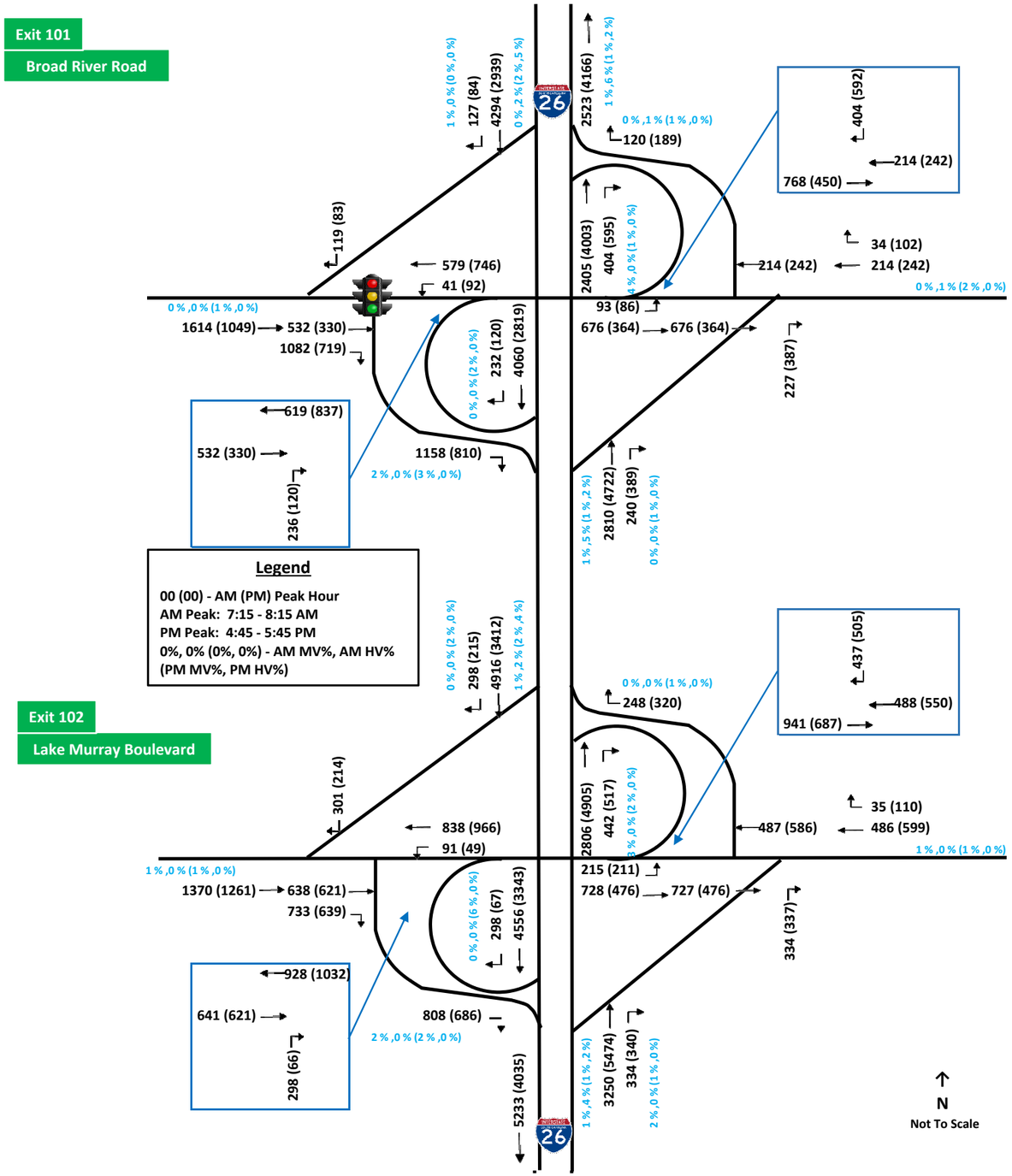

Carolina Crossroads
Existing Interchange Volumes

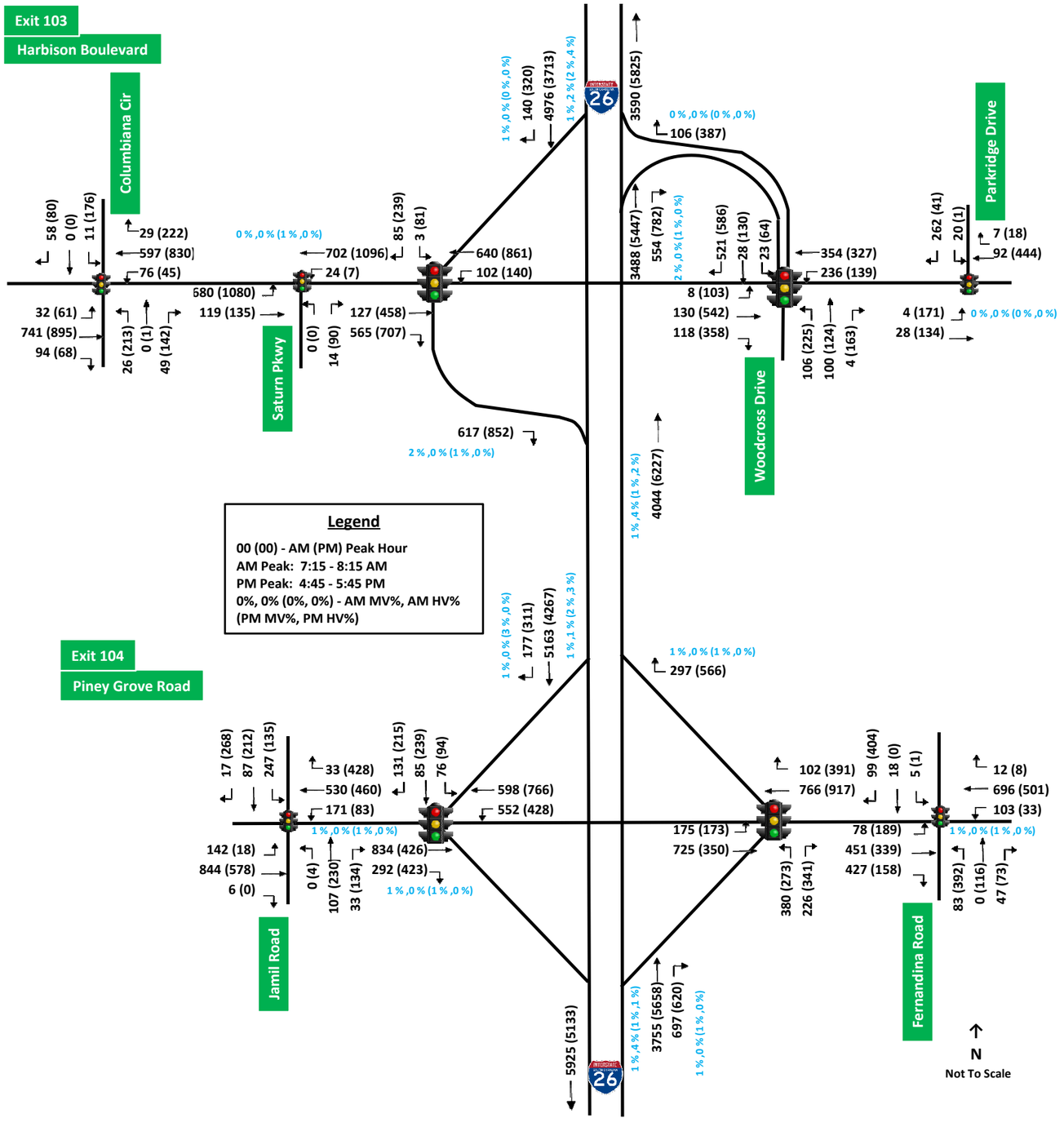

Carolina Crossroads
Existing Interchange Volumes

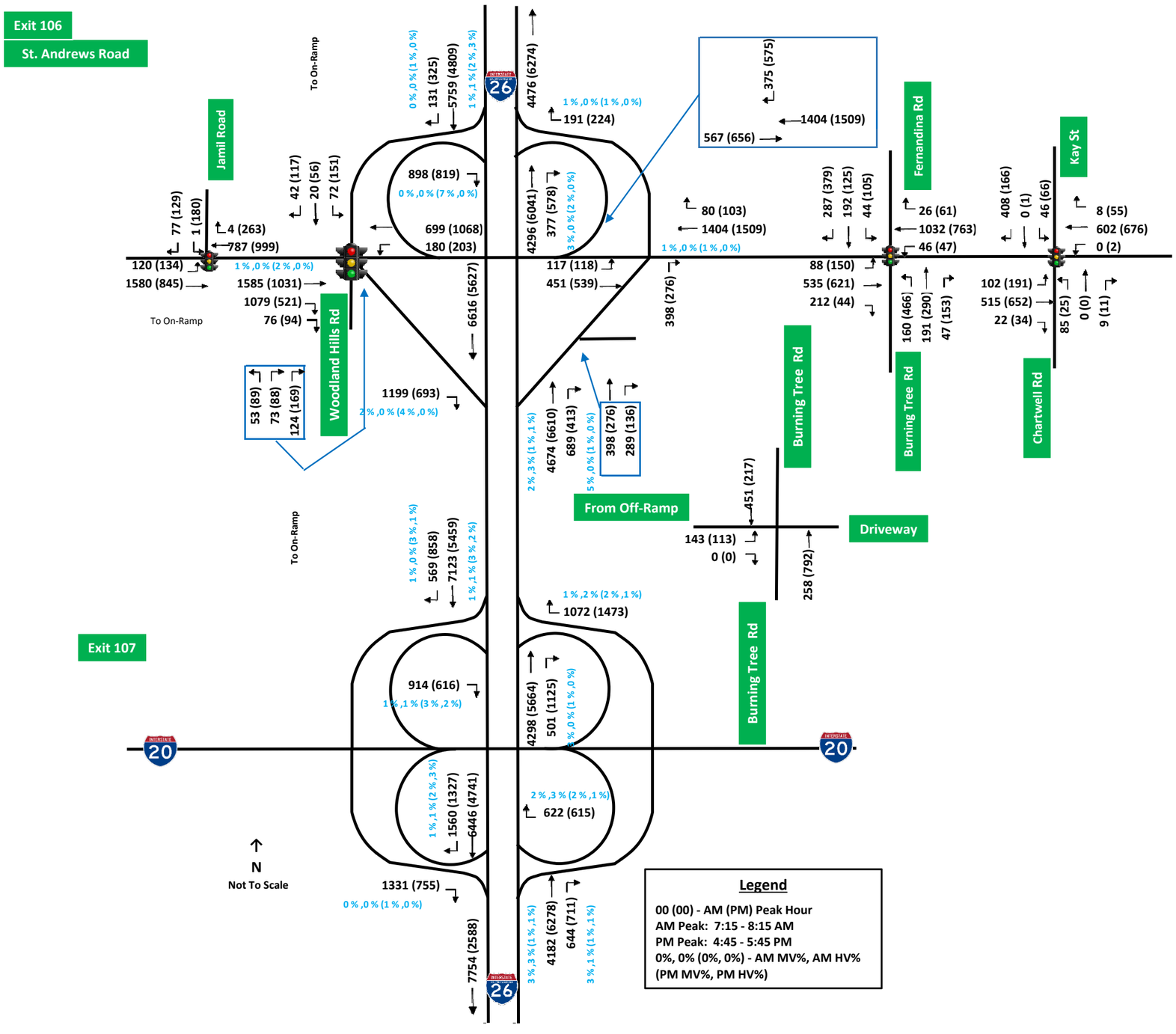

Carolina Crossroads
Existing Interchange Volumes

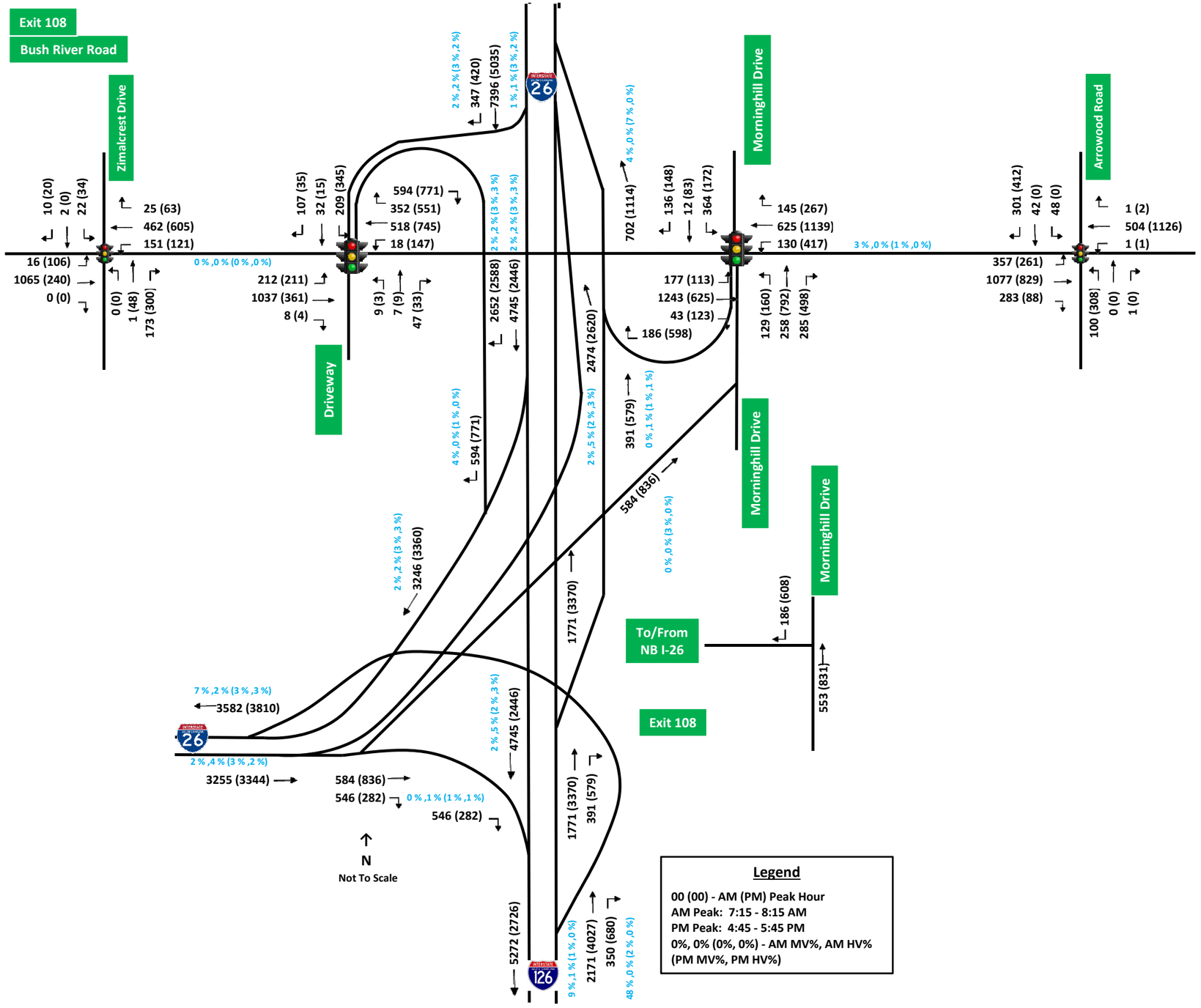

Carolina Crossroads
Existing Interchange Volumes

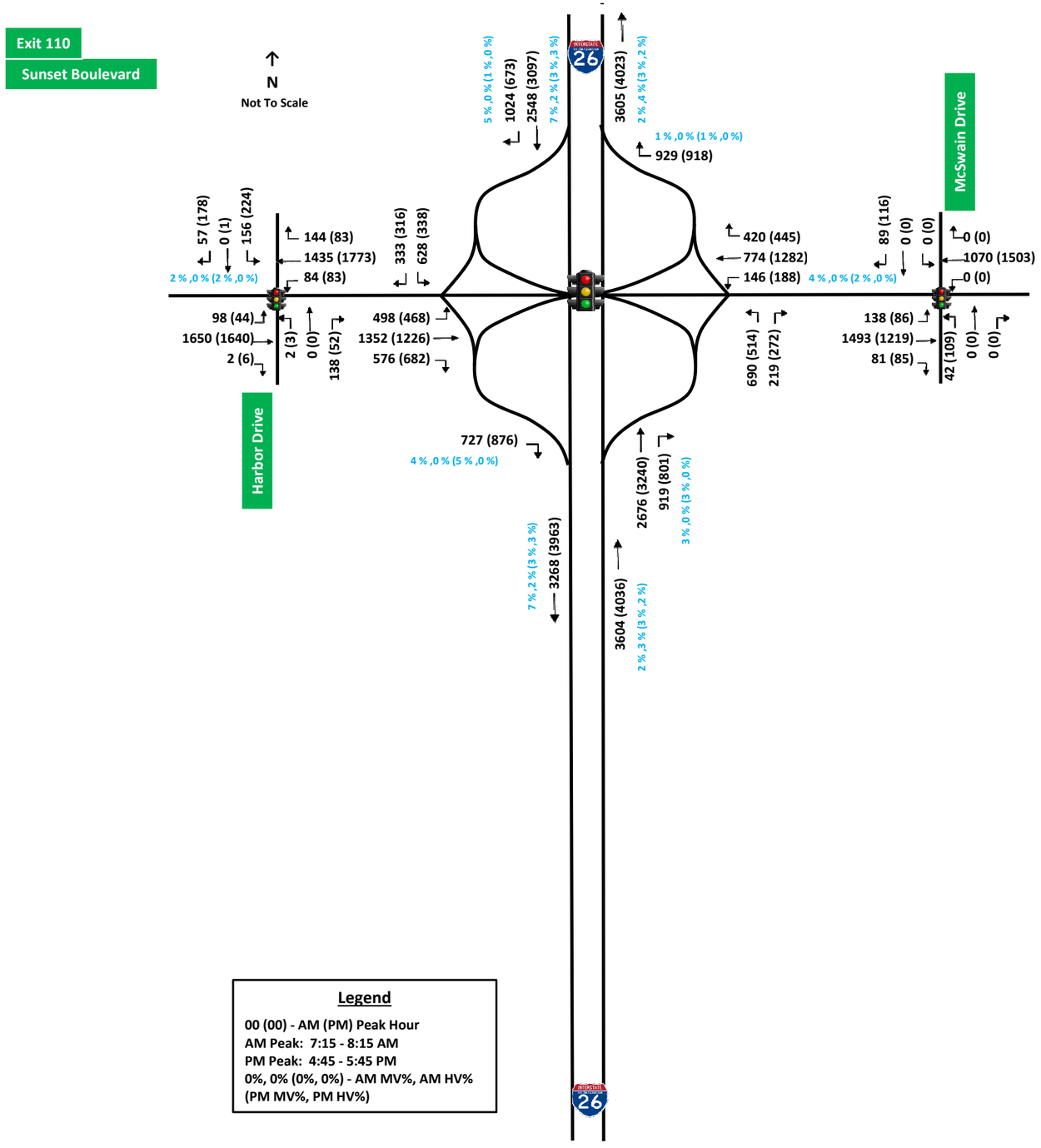

Legend

00 (00) - AM (PM) Peak Hour
AM Peak: 7:15 - 8:15 AM
PM Peak: 4:45 - 5:45 PM
0%, 0% (0%, 0%) - AM MV%, AM HV% (PM MV%, PM HV%)

Carolina Crossroads
Existing Interchange Volumes

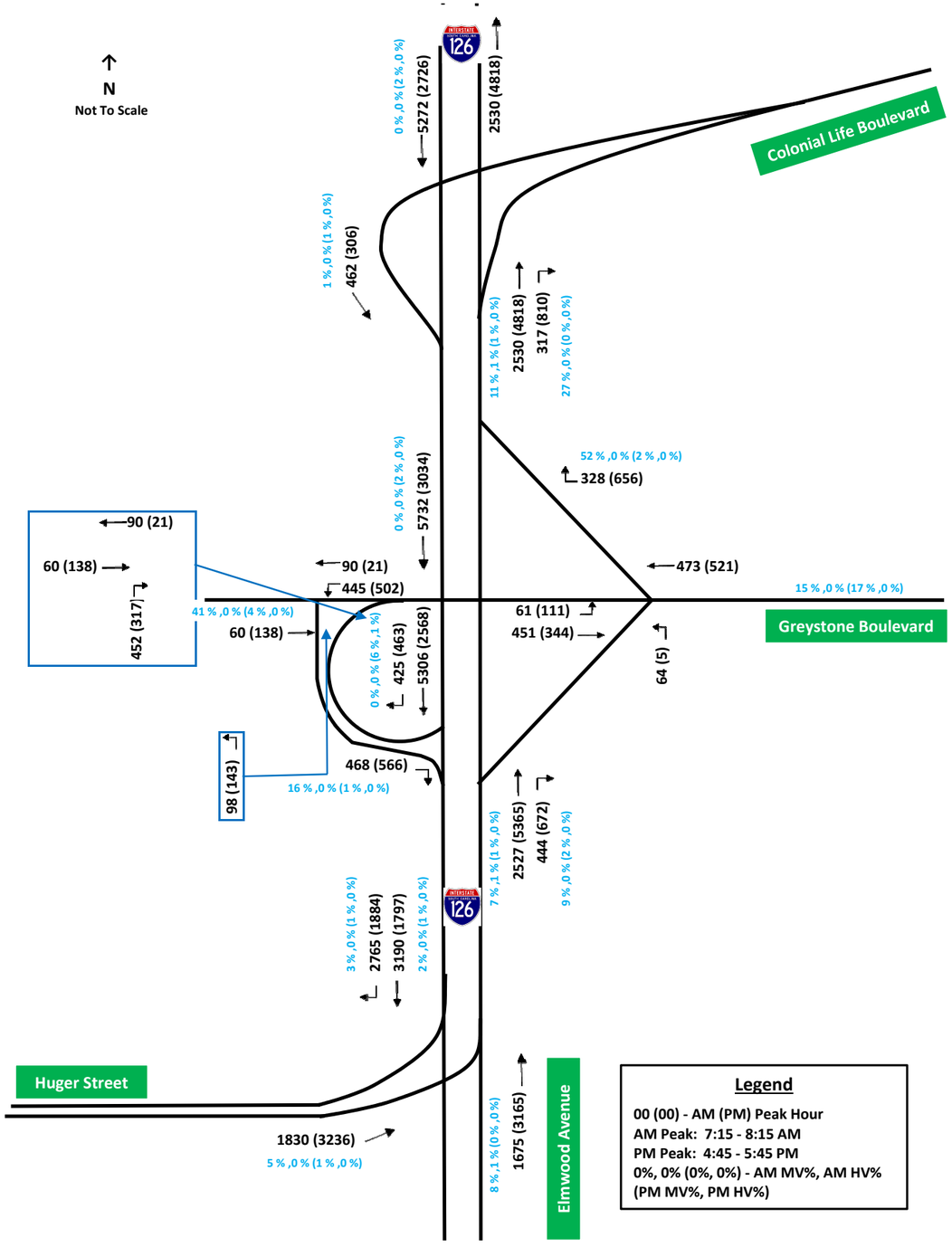

Carolina Crossroads
Existing Interchange Volumes

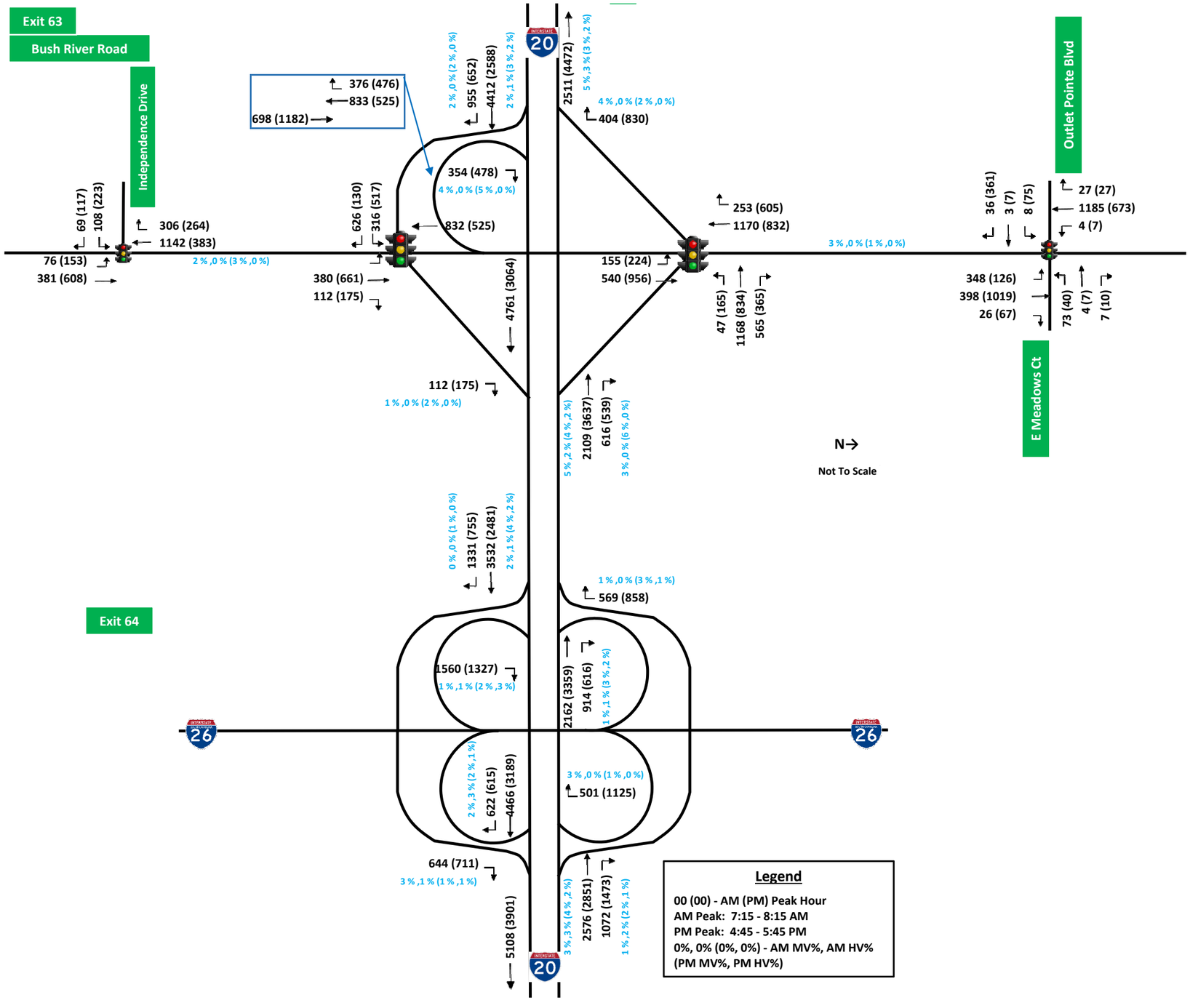

Carolina Crossroads
Existing Interchange Volumes

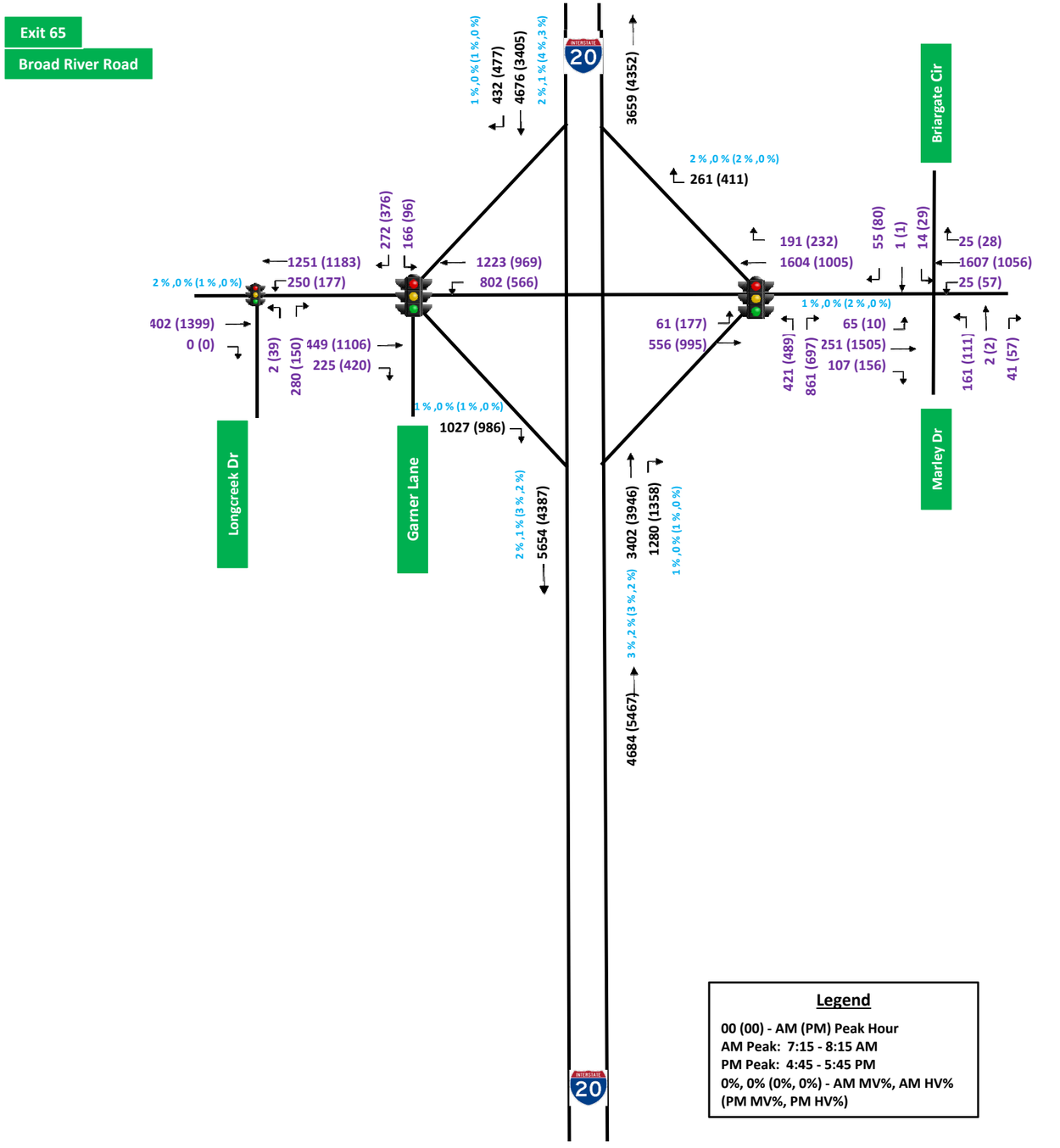

Additional turning movement counts were collected at the following locations:

1. Exit 102
   - Lake Murray Boulevard at College Street (signal) – Tuesday, November 22, 2016
   - Lake Murray Boulevard at Columbiana Drive (signal) Monday, November 21, 2016
   - Lake Murray Boulevard at Kinley/Parkridge Hospital (signal) – Tuesday, November 22, 2016
   - Lake Murray Boulevard at Parkridge Drive (signal) Monday, November 28, 2016
2. Exit 102 – 103
   - Columbiana Drive and Columbia Avenue/Gateway Academy (signal) Monday, November 28, 2016
   - Columbiana Drive and Crossbow Drive/Texas Roadhouse (signal) Wednesday, November 30, 2016
   - Columbiana Drive and Columbiana Circle (signal) Tuesday, November 29, 2016
3. Exit 103
   - Harbison Boulevard at Parkridge Drive (unsignalized) Wednesday, November 30, 2016
   - Woodcross Drive at Fernandina Road (unsignalized) Thursday, December 1, 2016
   - Harbison Boulevard at Saturn Parkway (signal) Friday, December 2, 2016
   - Harbison Boulevard at Columbiana Circle/Park Terrace Drive (signal) Monday, November 21, 2016
   - Harbison Boulevard at Columbiana Drive/Chik-Fil-A (signal) Tuesday, November 22, 2016
   - Harbison Boulevard at Rooms 2 Go/Pier One Driveways (signal) Monday, November 21, 2016
   - Harbison Boulevard at Bower Parkway (signal) Monday, November 21, 2016
   - Harbison Boulevard/Emory Lane at St. Andrews Road (signal) Monday, November 21, 2016
4. Exit 103 – 104
   - Bower Parkway at Park Terrace Drive (signal) Monday, November 21, 2016
   - Bower Parkway at Saturn Parkway (unsignalized) Tuesday, November 22, 2016
5. Exit 104
   - Piney Grove Road at Bower Parkway/Jamil Road (signal) Monday, November 21, 2016
   - Piney Grove Road at Foxfire Drive/Country Walk Apartments (unsignalized) Monday, November 21, 2016
   - Piney Grove Road at Fernandina Road (signal) Tuesday, November 22, 2016
   - Piney Grove Road at Piney Woods Road (roundabout) Tuesday, November 22, 2016
6. Exit 104 – Exit 106
   - Jamil Tram Road at Sidney Road (unsignalized) Tuesday, November 22, 2016
   - Jamil Road at Tram Road (unsignalized) Tuesday, November 22, 2016
   - Sidney Road at Tram Road (unsignalized) Tuesday, November 22, 2016
   - Fernandina Road and Beatty Road (unsignalized) Tuesday, November 22, 2016
   - Broad River Road and Beatty Road (unsignalized) Tuesday, November 22, 2016
   - Beatty Road and Evelyn Drive (unsignalized) Tuesday, November 22, 2016
   - Fernandina Road and Evelyn Drive (unsignalized) Monday, November 21, 2016
7. Exit 106
   - St. Andrews Road and Sidney Road (signal) Monday, November 28, 2016
   - St. Andrews Road and Ashland Road (signal) Monday, November 28, 2016

- St. Andrews Road and Kilbrannon Drive ((unsignalized) Monday, November 28, 2016
- St. Andrews Road and Jamil Road (signal) Monday, November 28, 2016
- Woodland Hills Road and Berry Hill Road (unsignalized) Monday, November 28, 2016
- St. Andrews Road at Kay Street/Chartwell Road (signal) Monday, November 28, 2016
- St. Andrews Road at Broad River Road (signal) Monday, November 28, 2016

8. Exit 106 – 108
    - Burning Tree Drive/Browning Road at Center Point Road (unsignalized) Tuesday, November 22, 2016
    - Browning Road at Zimalcrest Drive (unsignalized) Monday, November 28, 2016
9. Exit 108/Exit 63
    - Bush River Road at Ashland Road/Marydale Lane (signal) Tuesday, November 29, 2016
    - Bush River Road at Outlet Pointe Boulevard/E Meadow Court (signal) Monday, November 28, 2016
    - Bush River Road at Berryhill Road (signal) Wednesday, November 30, 2016
    - Bush River Road at Rockland Road (unsignalized) Tuesday, November 29, 2016
    - Bush River Road at Independence Avenue (signal) Wednesday, November 30, 2016
    - Bush River Road and Zimalcrest Drive (signal) Tuesday, November 29, 2016
    - Morninghill Drive and Burnette Drive (unsignalized) Thursday, December 1, 2016
    - Bush River Road at Arrowwood Road (signal) Tuesday, November 29, 2016
    - Bush River Road at Colonial Life Boulevard (signal) Tuesday, November 29, 2016
    - Bush River Road at Broad River Road (signal) Tuesday, November 29, 2016
10. Broad River Road (east of Exit 65)
    - Broad River Road at Arrowwood Road (signal) Tuesday, November 29, 2016
    - Broad River Road at Greystone Boulevard (signal) Tuesday, November 29, 2016
11. Exit 110
    - Sunset Boulevard at West Hospital Drive/Sunset Court (signal) Thursday, December 1, 2016
    - Sunset Boulevard at East Hospital Drive/Harbor Drive (signal) Thursday, December 1, 2016
    - Sunset Boulevard at McSwain Drive/Chris Drive (signal) Thursday, December 1, 2016
    - Sunset Boulevard at Whippoorwill Drive/Keckley Drive (signal) Thursday, December 1, 2016
12. Exit 65
    - Broad River Road at Marley Drive/Menlo Drive (signal) Thursday, December 1, 2016
    - Garner Lane at Eastbound on-ramp (unsignalized) Friday, December 2, 2016
    - Broad River Road at Longcreek Drive (signal) Thursday, December 1, 2016
    - Broad River Road at Dutch Square Boulevard (signal) Monday, November 28, 2016
    - Broad River Rd at Omarest Drive (signal) Friday, December 2, 2016

SOUTH CAROLINA DEPARTMENT OF TRANSPORTATION
DISTRICT 1
TRAFFIC ENGINEERING

County: Richland City: Columbia Date: 11/22/2016

Major Rt: Lake Murray Blvd * Not on State System Minor Rt: College St * Not on State System

Day of Week: Tuesday Weather: Clear Office: Short Counts JMS

Type of Control: Signal Speed Limit (major st) 40

Direction of Minor Street: N-S Intersection ADT - 26120 (Calc)

Number of Lanes (major st)* 2 Number of Lanes (minor st)* 1

* Each Direction

INTERSECTION VOLUME SUMMARY

	From N College St				From S College St				From E Lake Murray Blvd				From W Lake Murray Blvd				Total	Total
	LT	STR	RT	TOT	LT	STR	RT	TOT	LT	STR	RT	TOT	LT	STR	RT	TOT	Vol	Peds
7:00 - 7:15	8	0	2	10	6	0	16	22	4	151	8	163	3	245	5	253	448	0
7:15 - 7:30	18	3	3	24	13	1	25	39	7	159	11	177	7	272	4	283	523	1
7:30 - 7:45	7	2	4	13	14	0	23	37	6	181	9	196	0	270	8	278	524	0
7:45 - 8:00	21	0	2	23	11	1	13	25	17	191	17	225	4	240	11	255	528	2
8:00 - 8:15	24	1	4	29	8	1	17	26	9	164	13	186	3	224	11	238	479	2
8:15 - 8:30	16	1	3	20	9	0	12	21	11	161	12	184	3	214	6	223	448	0
8:30 - 8:45	13	2	5	20	11	0	13	24	15	176	14	205	4	222	9	235	484	0
8:45 - 9:00	16	1	3	20	17	3	15	35	29	173	4	206	9	234	16	259	520	0
9:00 - 9:15	13	1	2	16	14	1	16	31	14	181	10	205	5	233	20	258	510	0
9:15 - 9:30	11	0	9	20	12	0	21	33	8	152	8	168	3	196	6	205	426	0
9:30 - 9:45	15	1	8	24	14	4	27	45	14	157	6	177	4	200	8	212	458	0
9:45 - 10:00	14	2	3	19	15	3	25	43	12	180	11	203	4	247	16	267	532	2
10:00 - 10:15	17	4	3	24	12	4	10	26	17	169	9	195	10	200	12	222	467	0
10:15 - 10:30	15	1	6	22	12	1	17	30	13	143	4	160	8	193	15	216	428	0
10:30 - 10:45	9	2	5	16	17	3	17	37	13	205	16	234	8	270	9	287	574	0
10:45 - 11:00	12	4	4	20	16	4	14	34	23	197	18	238	6	218	15	239	531	0
11:00 - 11:15	14	1	4	19	11	2	13	26	21	152	14	187	2	176	12	190	422	0
11:15 - 11:30	14	1	6	21	17	4	19	40	9	187	10	206	4	235	15	254	521	0
11:30 - 11:45	22	3	4	29	14	5	8	27	15	159	11	185	1	172	11	184	425	0
11:45 - 12:00	16	1	4	21	15	5	18	38	29	234	13	276	1	261	19	281	616	0
12:00 - 12:15	6	5	7	18	25	1	21	47	22	256	18	296	4	266	19	289	650	0
12:15 - 12:30	24	3	5	32	19	3	19	41	22	224	10	256	2	272	18	292	621	0
12:30 - 12:45	10	1	6	17	21	3	24	48	15	244	12	271	7	261	14	282	618	0
12:45 - 13:00	13	2	2	17	17	2	18	37	23	195	11	229	7	234	14	255	538	0
13:00 - 13:15	22	3	2	27	17	3	19	39	27	195	12	234	5	230	20	255	555	0
13:15 - 13:30	12	4	3	19	16	5	9	30	18	141	13	172	12	161	18	191	412	0
13:30 - 13:45	9	7	3	19	12	4	9	25	16	201	15	232	4	238	14	256	532	0
13:45 - 14:00	15	6	2	23	24	2	15	41	23	239	19	281	4	254	11	269	614	0
14:00 - 14:15	18	4	4	26	16	2	14	32	16	245	24	285	6	233	10	249	592	0
14:15 - 14:30	20	8	2	30	22	4	23	49	9	232	13	254	8	216	20	244	577	0
14:30 - 14:45	12	2	5	19	23	5	23	51	18	160	15	193	6	162	9	177	440	0
14:45 - 15:00	23	1	7	31	25	2	26	53	11	224	16	251	13	219	16	248	583	0
15:00 - 15:15	18	4	6	28	30	7	17	54	36	253	17	306	8	241	17	266	654	0
15:15 - 15:30	17	3	2	22	21	4	15	40	17	235	23	275	13	254	19	286	623	0
15:30 - 15:45	12	2	2	16	19	2	12	33	19	233	21	273	9	232	16	257	579	0
15:45 - 16:00	15	5	2	22	18	3	19	40	23	237	21	281	6	219	17	242	585	1
16:00 - 16:15	17	5	7	29	26	1	10	37	34	239	8	281	6	238	14	258	605	0
16:15 - 16:30	18	8	6	32	24	1	14	39	22	216	18	256	4	248	15	267	594	1
16:30 - 16:45	32	6	4	42	24	0	16	40	30	240	18	288	5	272	21	298	668	0
16:45 - 17:00	15	4	6	25	18	1	14	33	27	267	15	309	13	268	22	303	670	0
17:00 - 17:15	20	10	6	36	27	6	28	61	29	248	14	291	11	265	16	292	680	0
17:15 - 17:30	12	9	1	22	20	1	9	30	30	168	5	203	0	228	11	239	494	0
17:30 - 17:45	14	8	0	22	14	4	10	28	27	100	3	130	6	153	6	165	345	0
17:45 - 18:00	21	7	8	36	23	5	24	52	38	230	15	283	4	216	21	241	612	0
18:00 - 18:15	16	1	6	23	11	6	17	34	23	240	10	273	6	199	10	215	545	0
18:15 - 18:30	21	1	2	24	14	4	14	32	25	246	13	284	5	205	8	218	558	0
18:30 - 18:45	21	5	7	33	11	3	18	32	34	281	14	329	5	199	12	216	610	0
18:45 - 19:00	20	3	2	25	12	0	14	26	24	265	16	305	12	178	5	195	551	0
TOTAL	768	158	199	1125	807	126	810	1743	944	9726	627	11297	280	10883	641	11804	25969	9
Trucks	5	0	2	7	1	0	3	4	0	50	3	53	0	60	1	61	125	0.5%
School Buses	0	0	5	5	1	0	6	7	2	14	0	16	2	16	0	18	46	0.2%

TOTAL AND PEAK HOUR VOLUME DIAGRAMS

Lake Murray Blvd AT College St Date: 11/22/2016

12.0 HOUR TOTAL VOLUME
FROM 7:00 TO 15:00

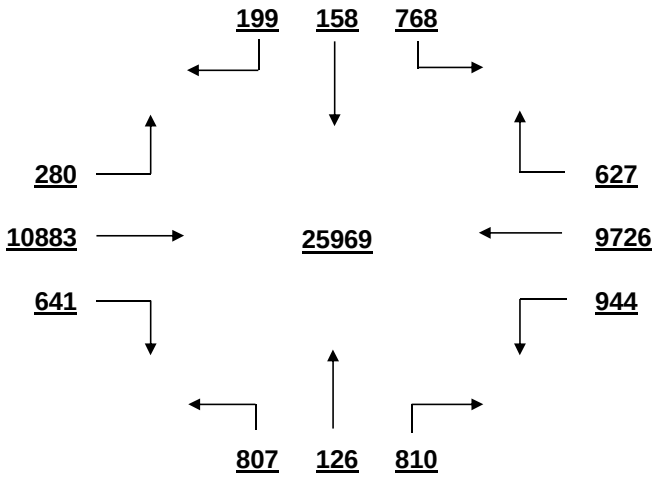

OVERALL PEAK HOUR VOLUME
FROM 16:15 TO 17:15

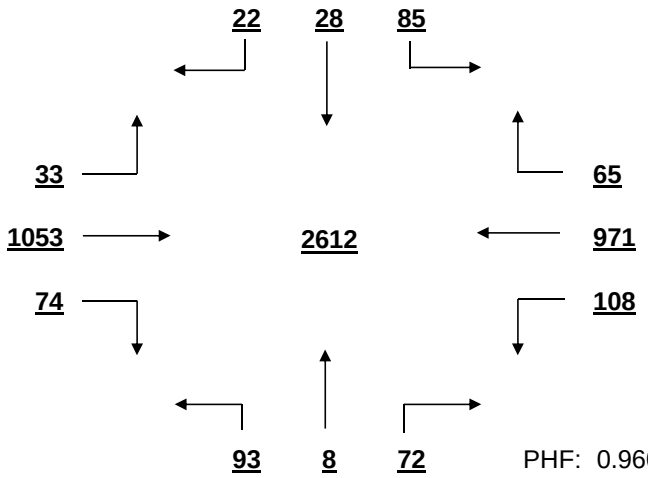

PHF: 0.960

AM PEAK HOUR VOLUME (0:00-10:45)
FROM 7:15 TO 8:15

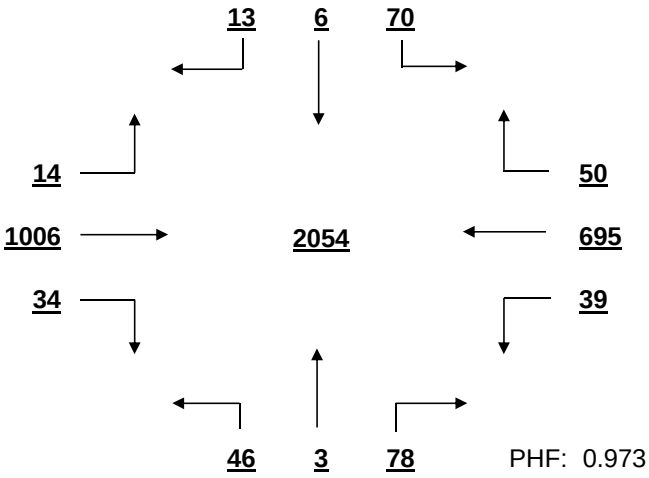

PHF: 0.973

PM PEAK HOUR VOLUME (14:15-23:45)
FROM 16:15 TO 17:15

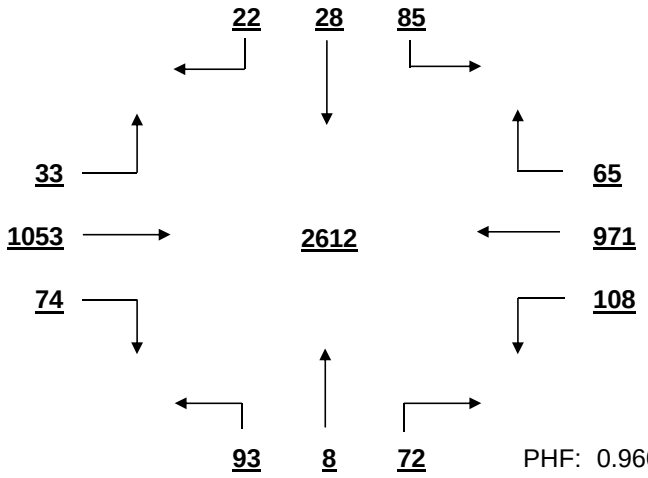

PHF: 0.960

MID-DAY PEAK HOUR VOLUME (11:00-14:00)
FROM 11:45 TO 12:45

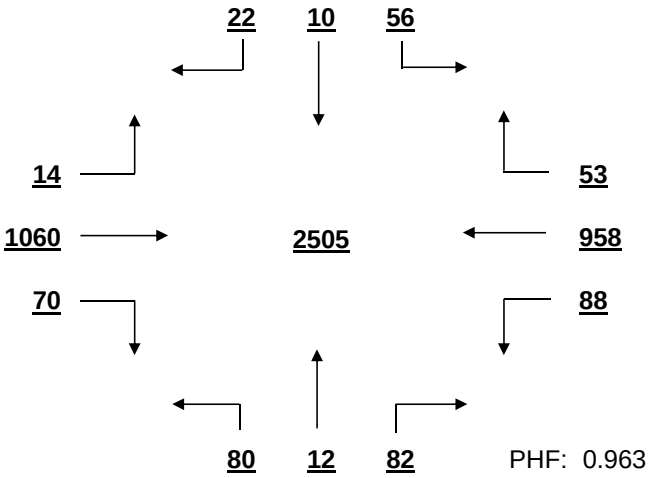

PHF: 0.963

OTHER HOUR VOLUME
FROM 7:00 TO 8:00

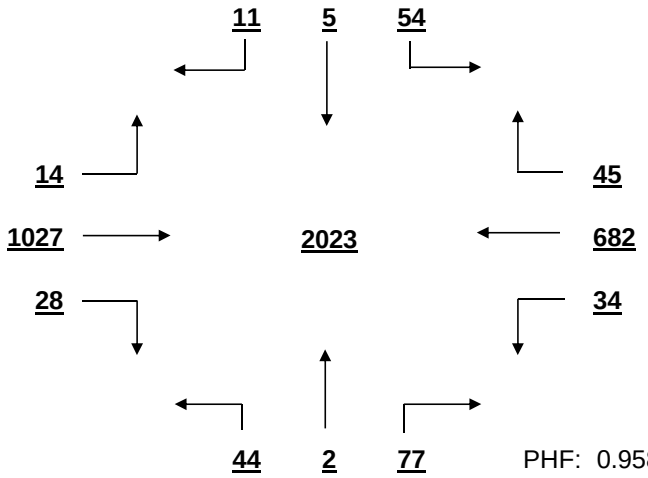

PHF: 0.958

SIGNAL WARRANT ANALYSIS

Lake Murray Blvd AT College St Date: 11/22/2016

Minor Street Volume, percent of total = 11.0%
Percent of Left Turns from Minor Street = 54.9%
Percent of Right Turns from Minor Street = 35.2%
Percent of Minor Street Right Turns to Remove from Warrant Analysis = 0%
WARRANT BASIS = **100%**

Warrant No. 1 - Vehicular Volume is met

Condition A - Minimum Vehicular Volume is not met

Average Major Street % of Warrant				Average Minor Street % of Warrant			
1925.1	/ 600	=	321%	145.3	/ 150	=	97%

Hourly percent of warrant

	7:00 - 8:00	8:00 - 9:00	9:00 - 10:00	10:00 - 11:00	11:00 - 12:00	12:00 - 13:00	13:00 - 14:00	14:00 - 15:00	15:00 - 16:00	16:00 - 17:00	17:00 - 18:00	18:00 - 19:00
Major St.	305%	289%	283%	299%	294%	362%	315%	317%	364%	377%	307%	339%
Minor St.	82%	71%	101%	85%	87%	115%	90%	123%	111%	99%	114%	83%

Condition B - Interruption to Continuous Traffic is met

Average Major Street % of Warrant				Average Minor Street % of Warrant			
1925.1	/ 900	=	214%	145.3	/ 75	=	194%

Hourly percent of warrant

	7:00 - 8:00	8:00 - 9:00	9:00 - 10:00	10:00 - 11:00	11:00 - 12:00	12:00 - 13:00	13:00 - 14:00	14:00 - 15:00	15:00 - 16:00	16:00 - 17:00	17:00 - 18:00	18:00 - 19:00
Major St.	203%	193%	188%	199%	196%	241%	210%	211%	243%	251%	205%	226%
Minor St.	164%	141%	203%	169%	175%	231%	180%	247%	223%	199%	228%	165%

80% Combination of Conditions A & B is met

Warrant No. 2 - Four Hour Vehicular Volume is met

Hourly percent of warrant

	7:00 - 8:00	8:00 - 9:00	9:00 - 10:00	10:00 - 11:00	11:00 - 12:00	12:00 - 13:00	13:00 - 14:00	14:00 - 15:00	15:00 - 16:00	16:00 - 17:00	17:00 - 18:00	18:00 - 19:00
Minor St.	154%	133%	190%	159%	164%	216%	169%	231%	209%	186%	214%	155%

Warrant No. 3 - Peak Hour is met

Overall Peak Hour: 16:15 - 17:15 — Percent of warrant
Minor St. 173%

Higher Volume Side Street Peak Hour: 14:15 - 15:15 — Percent of warrant
Minor St. 207%

Warrant No. 4 - Pedestrian Volume. Pedestrian volume shown are minumum volumes assuming heavy major street traffic. If these volumes are met, warrant 4 requires further engineering analysis

S

Minimum 4 hour ped. volume crossing major street: 107

Minimum peak hour ped. volume crossing major street: 133

Number of pedestrians crossing major street

	7:00 - 8:00	8:00 - 9:00	9:00 - 10:00	10:00 - 11:00	11:00 - 12:00	12:00 - 13:00	13:00 - 14:00	14:00 - 15:00	15:00 - 16:00	16:00 - 17:00	17:00 - 18:00	18:00 - 19:00
Major t.	3	1	2	0	0	0	0	0	1	1	0	0

Warrant No. 7 - Crash Experience (Requires 3 criteria analysis by engineering)

Total Number: 0 From: 1/1/2005 to 1/1/2008
Accident Rate: 0.00 per million entering vehicles

Types of Accidents	No.	/	Avg.		No.	/	Avg.
Right Angle	0	/	0.0	Rear End	0	/	0.0
Lost Control	0	/	0.0	Side Swipe	0	/	0.0
Left Turn	0	/	0.0	Other	0	/	0.0

SOUTH CAROLINA DEPARTMENT OF TRANSPORTATION
DISTRICT 1
TRAFFIC ENGINEERING

County: Richland City: Columbia Date: 11/21/2016

Major Rt: Lake Murray Blvd * Not on State System Minor Rt: Columbiana Dr * Not on State System

Day of Week: Monday Weather: Clear Office: Short Counts JMS

Type of Control: Signal Speed Limit (major st) 40

Direction of Minor Street: N-S Intersection ADT - 37170 (Calc)

Number of Lanes (major st)* 2 Number of Lanes (minor st)* 1

* Each Direction

INTERSECTION VOLUME SUMMARY

	From N Columbiana Dr				From S Columbiana Dr				From E Lake Murray Blvd				From W Lake Murray Blvd				Total	Total
	LT	STR	RT	TOT	LT	STR	RT	TOT	LT	STR	RT	TOT	LT	STR	RT	TOT	Vol	Peds
7:00 - 7:15	17	15	10	42	8	11	30	49	22	163	5	190	14	233	27	274	555	0
7:15 - 7:30	20	40	18	78	22	14	35	71	41	155	9	205	23	263	37	323	677	0
7:30 - 7:45	29	54	23	106	14	10	35	59	53	176	11	240	21	210	36	267	672	0
7:45 - 8:00	19	50	25	94	12	12	22	46	33	181	11	225	24	253	17	294	659	0
8:00 - 8:15	24	46	28	98	11	8	24	43	28	179	9	216	24	218	42	284	641	0
8:15 - 8:30	15	50	29	94	20	9	31	60	52	208	16	276	26	255	35	316	746	0
8:30 - 8:45	11	27	29	67	17	12	33	62	28	177	15	220	18	194	29	241	590	0
8:45 - 9:00	20	32	25	77	14	7	18	39	25	201	12	238	27	227	31	285	639	0
9:00 - 9:15	10	43	31	84	22	20	16	58	31	181	19	231	21	226	35	282	655	0
9:15 - 9:30	10	38	17	65	18	10	36	64	36	154	16	206	18	192	35	245	580	0
9:30 - 9:45	9	32	31	72	22	16	23	61	26	194	14	234	20	221	49	290	657	0
9:45 - 10:00	6	52	25	83	15	17	24	56	42	183	15	240	24	233	42	299	678	0
10:00 - 10:15	19	32	38	89	23	25	25	73	44	182	19	245	23	182	43	248	655	0
10:15 - 10:30	15	28	22	65	23	17	28	68	23	162	10	195	25	207	55	287	615	0
10:30 - 10:45	9	34	22	65	43	28	21	92	38	186	17	241	20	224	61	305	703	2
10:45 - 11:00	15	36	28	79	33	24	23	80	30	197	16	243	20	174	48	242	644	0
11:00 - 11:15	13	34	27	74	41	26	37	104	43	205	19	267	19	225	63	307	752	0
11:15 - 11:30	5	37	15	57	38	27	17	82	61	187	22	270	19	199	64	282	691	0
11:30 - 11:45	7	19	22	48	34	15	17	66	25	131	9	165	15	141	38	194	473	0
11:45 - 12:00	10	43	35	88	39	33	36	108	52	226	20	298	26	222	68	316	810	0
12:00 - 12:15	17	46	41	104	46	38	40	124	47	224	20	291	41	205	70	316	835	0
12:15 - 12:30	14	51	43	108	43	34	47	124	49	209	25	283	33	230	67	330	845	0
12:30 - 12:45	8	35	54	97	34	32	33	99	39	168	13	220	21	194	40	255	671	0
12:45 - 13:00	17	41	23	81	56	49	55	160	40	234	29	303	26	247	77	350	894	0
13:00 - 13:15	20	36	41	97	65	50	63	178	35	210	19	264	39	204	61	304	843	0
13:15 - 13:30	17	33	32	82	49	35	58	142	31	183	17	231	29	182	44	255	710	3
13:30 - 13:45	13	27	16	56	45	26	34	105	25	170	9	204	44	120	42	206	571	0
13:45 - 14:00	12	37	30	79	50	46	43	139	24	193	14	231	29	218	48	295	744	0
14:00 - 14:15	13	13	29	55	38	28	34	100	33	192	12	237	19	172	42	233	625	0
14:15 - 14:30	10	33	29	72	54	45	38	137	54	205	24	283	33	225	58	316	808	0
14:30 - 14:45	13	31	29	73	50	45	60	155	41	254	16	311	32	215	82	329	868	0
14:45 - 15:00	10	39	25	74	48	39	55	142	52	218	17	287	24	214	60	298	801	0
15:00 - 15:15	18	29	22	69	39	33	54	126	39	108	6	153	25	174	29	228	576	1
15:15 - 15:30	13	33	21	67	55	46	48	149	38	154	15	207	28	207	37	272	695	0
15:30 - 15:45	9	33	24	66	68	46	47	161	38	178	19	235	30	203	53	286	748	0
15:45 - 16:00	11	41	30	82	57	31	53	141	47	209	31	287	34	204	44	282	792	2
16:00 - 16:15	11	39	34	84	45	42	45	132	56	245	33	334	40	219	54	313	863	0
16:15 - 16:30	9	39	39	87	59	45	42	146	50	202	26	278	23	169	33	225	736	0
16:30 - 16:45	12	45	27	84	52	46	58	156	66	296	43	405	46	239	59	344	989	0
16:45 - 17:00	10	41	35	86	48	55	50	153	66	303	41	410	40	223	46	309	958	2
17:00 - 17:15	9	33	23	65	34	33	43	110	52	252	29	333	26	251	32	309	817	0
17:15 - 17:30	13	58	28	99	44	49	68	161	66	246	27	339	44	262	48	354	953	0
17:30 - 17:45	13	53	25	91	42	35	48	125	62	247	46	355	66	267	47	380	951	0
17:45 - 18:00	18	37	32	87	53	53	72	178	71	233	24	328	52	197	40	289	882	0
18:00 - 18:15	18	34	20	72	53	36	45	134	56	227	29	312	16	179	44	239	757	0
18:15 - 18:30	16	43	26	85	57	50	42	149	57	257	26	340	26	232	68	326	900	0
18:30 - 18:45	20	34	38	92	56	35	50	141	56	206	15	277	22	191	45	258	768	0
18:45 - 19:00	10	25	16	51	30	25	30	85	29	127	6	162	16	111	29	156	454	0
TOTAL	657	1781	1332	3770	1839	1468	1886	5193	2052	9578	915	12545	1331	10053	2254	13638	35146	10
Trucks	1	3	4	8	4	3	6	13	1	55	2	58	4	49	6	59	138	0.4%
School Buses	1	7	2	10	3	4	7	14	7	11	2	20	1	16	8	25	69	0.2%

TOTAL AND PEAK HOUR VOLUME DIAGRAMS

Lake Murray Blvd AT Columbiana Dr Date: 11/21/2016

12.0 HOUR TOTAL VOLUME
FROM 7:00 TO 15:00

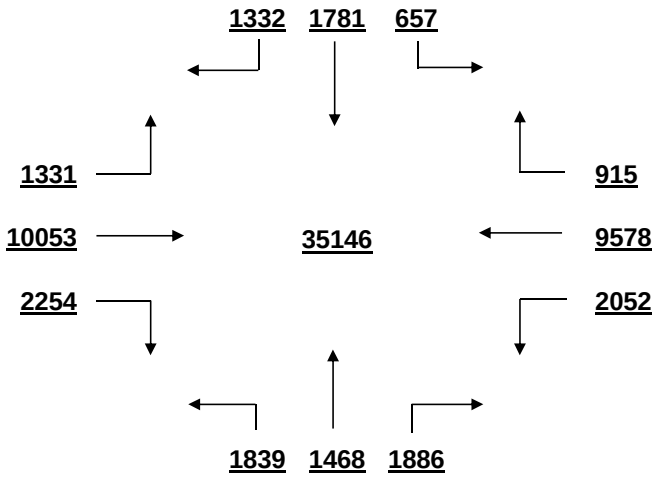

OVERALL PEAK HOUR VOLUME
FROM 16:30 TO 17:30

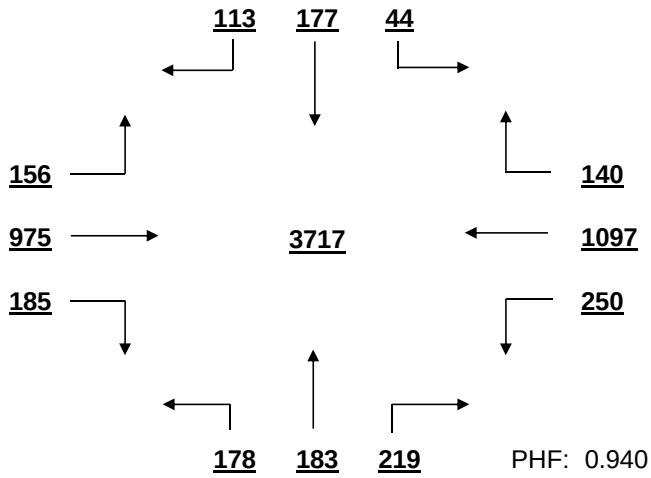

PHF: 0.940

AM PEAK HOUR VOLUME (0:00-10:45)
FROM 7:30 TO 8:30

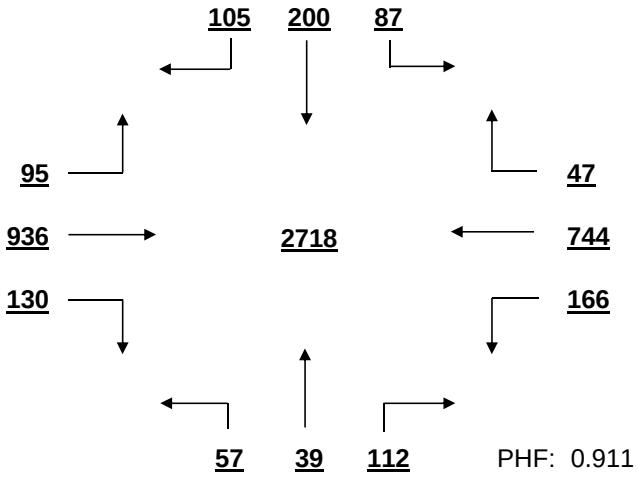

PHF: 0.911

PM PEAK HOUR VOLUME (14:15-23:45)
FROM 16:30 TO 17:30

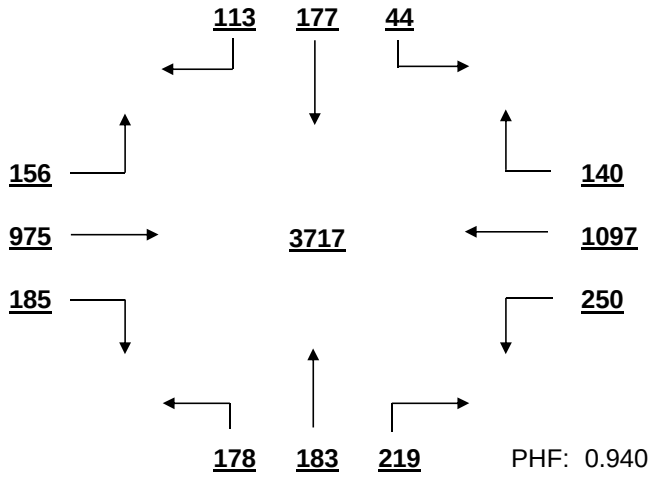

PHF: 0.940

MID-DAY PEAK HOUR VOLUME (11:00-14:00)
FROM 12:15 TO 13:15

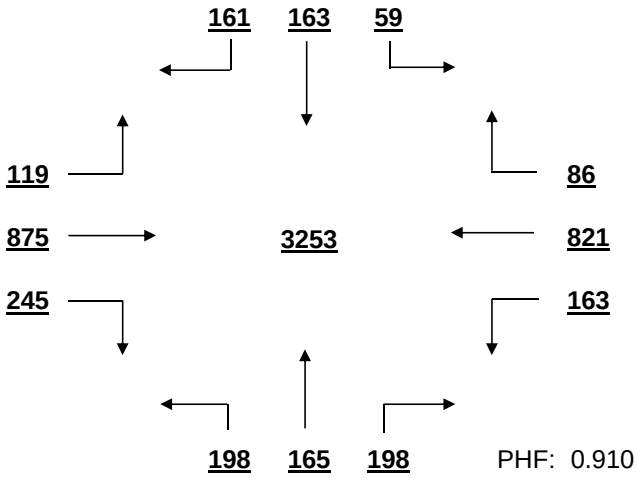

PHF: 0.910

OTHER HOUR VOLUME
FROM 7:00 TO 8:00

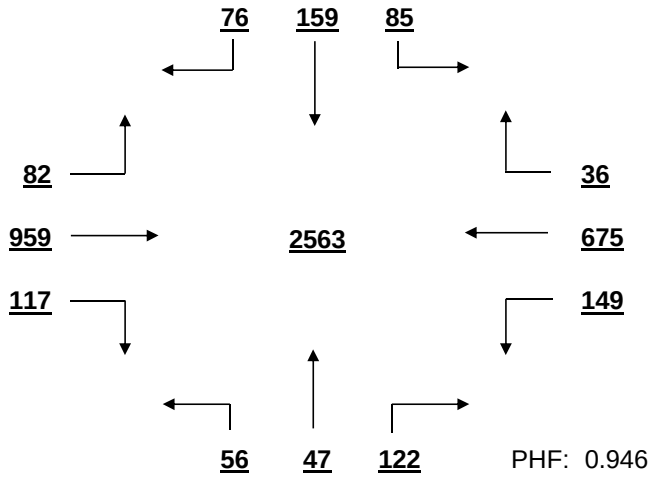

PHF: 0.946

SIGNAL WARRANT ANALYSIS

Lake Murray Blvd AT Columbiana Dr Date: 11/21/2016

Minor Street Volume, percent of total = 25.5%
Percent of Left Turns from Minor Street = 27.8%
Percent of Right Turns from Minor Street = 35.9%
Percent of Minor Street Right Turns to Remove from Warrant Analysis = 0%
WARRANT BASIS = **100%**

Warrant No. 1 - Vehicular Volume is met

Condition A - Minimum Vehicular Volume is met

Average Major Street % of Warrant	Average Minor Street % of Warrant
2181.9 / 600 = 364%	432.8 / 150 = 289%

Hourly percent of warrant

	7:00 - 8:00	8:00 - 9:00	9:00 - 10:00	10:00 - 11:00	11:00 - 12:00	12:00 - 13:00	13:00 - 14:00	14:00 - 15:00	15:00 - 16:00	16:00 - 17:00	17:00 - 18:00	18:00 - 19:00
Major St.	336%	346%	338%	334%	350%	391%	332%	382%	325%	436%	448%	345%
Minor St.	213%	224%	203%	209%	240%	338%	376%	356%	385%	391%	383%	339%

Condition B - Interruption to Continuous Traffic is met

Average Major Street % of Warrant	Average Minor Street % of Warrant
2181.9 / 900 = 242%	432.8 / 75 = 577%

Hourly percent of warrant

	7:00 - 8:00	8:00 - 9:00	9:00 - 10:00	10:00 - 11:00	11:00 - 12:00	12:00 - 13:00	13:00 - 14:00	14:00 - 15:00	15:00 - 16:00	16:00 - 17:00	17:00 - 18:00	18:00 - 19:00
Major St.	224%	231%	225%	223%	233%	261%	221%	255%	217%	291%	299%	230%
Minor St.	427%	448%	405%	417%	480%	676%	752%	712%	769%	783%	765%	679%

80% Combination of Conditions A & B is met

Warrant No. 2 - Four Hour Vehicular Volume is met

Hourly percent of warrant

	7:00 - 8:00	8:00 - 9:00	9:00 - 10:00	10:00 - 11:00	11:00 - 12:00	12:00 - 13:00	13:00 - 14:00	14:00 - 15:00	15:00 - 16:00	16:00 - 17:00	17:00 - 18:00	18:00 - 19:00
Minor St.	400%	420%	380%	391%	450%	634%	705%	668%	721%	734%	718%	636%

Warrant No. 3 - Peak Hour is met

Percent of warrant		Percent of warrant	
Overall Peak Hour: 16:30 - 17:30		Higher Volume Side Street Peak Hour: 17:45 - 18:45	
Minor St.	580%	Minor St.	602%

Warrant No. 4 - Pedestrian Volume. Pedestrian volume shown are minumum volumes assuming heavy major street traffic. If these volumes are met, warrant 4 requires further engineering analysis

S

Minimum 4 hour ped. volume crossing major street	Minimum peak hour ped. volume crossing major street
107	133

Number of pedestrians crossing major street

	7:00 - 8:00	8:00 - 9:00	9:00 - 10:00	10:00 - 11:00	11:00 - 12:00	12:00 - 13:00	13:00 - 14:00	14:00 - 15:00	15:00 - 16:00	16:00 - 17:00	17:00 - 18:00	18:00 - 19:00
Major t.	0	0	0	2	0	0	2	0	1	1	0	0

Warrant No. 7 - Crash Experience (Requires 3 criteria analysis by engineering)

Total Number: 0 From: 1/1/2005 to 1/1/2008
Accident Rate: 0.00 per million entering vehicles

Types of Accidents	No.	/	Avg.		No.	/	Avg.
Right Angle	0	/	0.0	Rear End	0	/	0.0
Lost Control	0	/	0.0	Side Swipe	0	/	0.0
Left Turn	0	/	0.0	Other	0	/	0.0

SOUTH CAROLINA DEPARTMENT OF TRANSPORTATION
DISTRICT 1
TRAFFIC ENGINEERING

County: Richland City: Columbia Date: 11/22/2016

Major Rt: Lake Murray Blvd * Not on State System Minor Rt: Kinley-Parkridge Dr * Not on State System

Day of Week: Tuesday Weather: Clear Office: Short Counts JMS

Type of Control: Signal Speed Limit (major st) 45

Direction of Minor Street: N-S Intersection ADT - 23250 (Calc)

Number of Lanes (major st)* 2 Number of Lanes (minor st)* 1

* Each Direction

INTERSECTION VOLUME SUMMARY

	From N Kinley-Parkridge D				From S Kinley-Parkridge D				From E Lake Murray Blvd				From W Lake Murray Blvd				Total	Total
	LT	STR	RT	TOT	LT	STR	RT	TOT	LT	STR	RT	TOT	LT	STR	RT	TOT	Vol	Peds
7:00 - 7:15	10	3	151	164	5	1	1	7	1	44	8	53	55	59	21	135	359	0
7:15 - 7:30	31	9	133	173	7	0	2	9	3	48	9	60	83	87	24	194	436	0
7:30 - 7:45	49	10	135	194	5	1	1	7	5	49	6	60	96	138	48	282	543	0
7:45 - 8:00	58	8	113	179	14	3	5	22	4	40	10	54	93	150	46	289	544	0
8:00 - 8:15	62	7	93	162	6	1	5	12	0	45	9	54	57	116	54	227	455	1
8:15 - 8:30	29	13	98	140	13	0	3	16	5	44	13	62	59	85	38	182	400	0
8:30 - 8:45	22	7	84	113	14	5	5	24	3	45	8	56	85	66	38	189	382	0
8:45 - 9:00	35	5	77	117	22	1	3	26	2	51	12	65	72	65	31	168	376	1
9:00 - 9:15	29	5	88	122	21	1	1	23	3	59	9	71	72	63	18	153	369	0
9:15 - 9:30	23	2	106	131	21	6	3	30	1	50	16	67	73	49	34	156	384	0
9:30 - 9:45	13	3	88	104	17	4	2	23	1	42	14	57	79	40	37	156	340	0
9:45 - 10:00	28	7	81	116	22	6	4	32	2	47	14	63	82	52	22	156	367	0
10:00 - 10:15	15	8	97	120	23	2	8	33	2	42	17	61	55	50	26	131	345	0
10:15 - 10:30	23	13	78	114	31	4	8	43	1	48	20	69	62	40	31	133	359	0
10:30 - 10:45	13	5	54	72	18	3	2	23	1	48	9	58	50	46	20	116	269	0
10:45 - 11:00	24	10	88	122	24	7	5	36	0	48	19	67	62	60	29	151	376	0
11:00 - 11:15	20	7	104	131	31	6	9	46	0	43	19	62	76	65	17	158	397	0
11:15 - 11:30	18	5	83	106	25	2	3	30	5	54	21	80	62	61	15	138	354	0
11:30 - 11:45	23	7	74	104	38	2	3	43	2	44	22	68	75	34	11	120	335	0
11:45 - 12:00	13	3	44	60	9	2	0	11	2	26	5	33	29	25	15	69	173	0
12:00 - 12:15	27	3	104	134	30	11	4	45	0	96	28	124	94	59	14	167	470	0
12:15 - 12:30	29	11	77	117	33	10	2	45	0	53	21	74	98	67	20	185	421	1
12:30 - 12:45	10	2	51	63	2	0	1	3	0	17	7	24	56	21	6	83	173	1
12:45 - 13:00	16	4	74	94	22	2	3	27	1	40	22	63	91	61	23	175	359	0
13:00 - 13:15	23	2	96	121	23	7	2	32	1	84	34	119	96	71	33	200	472	0
13:15 - 13:30	15	4	108	127	35	11	4	50	1	66	29	96	96	59	28	183	456	0
13:30 - 13:45	16	8	89	113	21	3	4	28	3	50	22	75	98	62	34	194	410	0
13:45 - 14:00	14	1	96	111	26	1	4	31	4	61	27	92	108	58	26	192	426	0
14:00 - 14:15	28	2	83	113	27	2	3	32	0	52	28	80	109	56	19	184	409	0
14:15 - 14:30	13	5	83	101	20	2	2	24	1	44	14	59	52	47	18	117	301	0
14:30 - 14:45	15	5	93	113	26	4	4	34	5	53	23	81	109	61	29	199	427	1
14:45 - 15:00	21	12	125	158	46	6	7	59	2	66	39	107	146	54	22	222	546	0
15:00 - 15:15	21	4	111	136	43	7	1	51	7	75	22	104	125	61	30	216	507	1
15:15 - 15:30	12	3	101	116	34	6	2	42	0	81	32	113	105	68	15	188	459	0
15:30 - 15:45	18	6	85	109	51	6	9	66	1	77	25	103	118	68	22	208	486	0
15:45 - 16:00	16	9	90	115	37	6	6	49	3	78	37	118	110	65	29	204	486	0
16:00 - 16:15	23	6	106	135	42	7	9	58	2	90	38	130	118	68	19	205	528	0
16:15 - 16:30	22	2	80	104	29	8	9	46	0	91	30	121	126	76	10	212	483	1
16:30 - 16:45	27	1	95	123	63	15	7	85	0	108	50	158	127	53	11	191	557	0
16:45 - 17:00	16	4	127	147	58	11	2	71	1	128	48	177	146	53	14	213	608	0
17:00 - 17:15	22	2	108	132	48	16	6	70	1	129	62	192	151	72	6	229	623	0
17:15 - 17:30	22	0	83	105	28	9	2	39	0	107	59	166	143	73	11	227	537	0
17:30 - 17:45	31	1	118	150	42	5	3	50	0	79	21	100	132	54	6	192	492	0
17:45 - 18:00	10	0	87	97	26	0	1	27	0	73	35	108	147	78	5	230	462	0
18:00 - 18:15	13	1	88	102	18	3	2	23	1	56	24	81	122	115	4	241	447	3
18:15 - 18:30	18	1	98	117	12	2	0	14	10	48	9	67	96	121	6	223	421	0
18:30 - 18:45	17	4	89	110	14	0	2	16	0	81	45	126	152	127	11	290	542	0
18:45 - 19:00	10	1	57	68	5	4	2	11	0	64	13	77	100	86	9	195	351	0
TOTAL	1063	241	4471	5775	1227	221	176	1624	87	2964	1104	4155	4548	3265	1055	8868	20422	10
Trucks	2	1	8	11	1	1	0	2	0	9	2	11	17	14	2	33	57	0.3%
School Buses	1	0	13	14	2	1	0	3	0	6	1	7	16	7	0	23	47	0.2%

TOTAL AND PEAK HOUR VOLUME DIAGRAMS

Lake Murray Blvd AT Kinley-Parkridge Dr Date: 11/22/2016

12.0 HOUR TOTAL VOLUME
FROM 7:00 TO 15:00

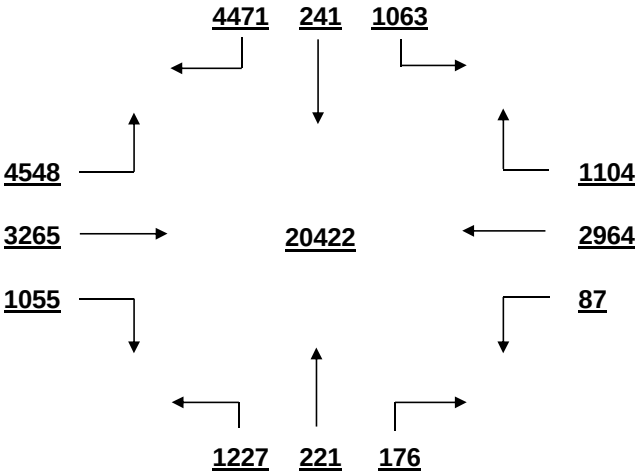

OVERALL PEAK HOUR VOLUME
FROM 16:30 TO 17:30

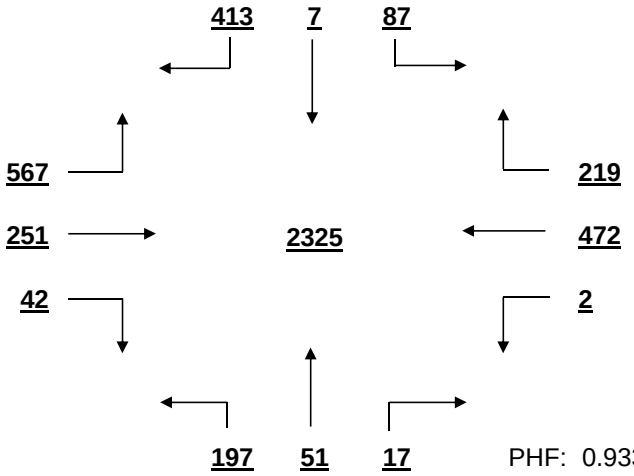

PHF: 0.933

AM PEAK HOUR VOLUME (0:00-10:45)
FROM 7:15 TO 8:15

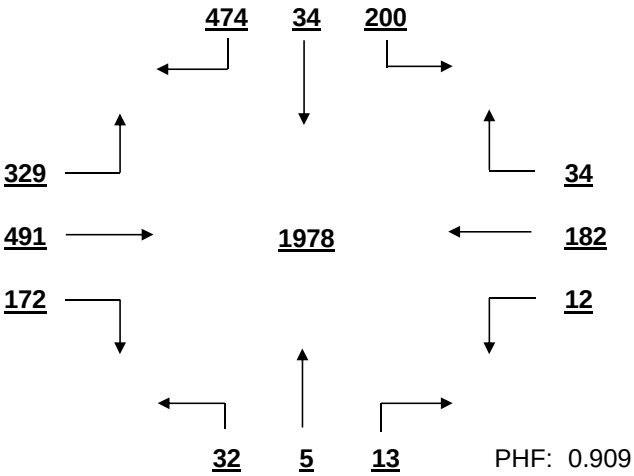

PHF: 0.909

PM PEAK HOUR VOLUME (14:15-23:45)
FROM 16:30 TO 17:30

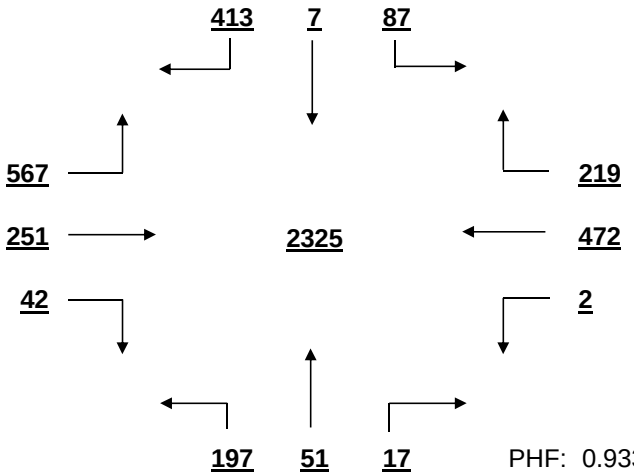

PHF: 0.933

MID-DAY PEAK HOUR VOLUME (11:00-14:00)
FROM 13:00 TO 14:00

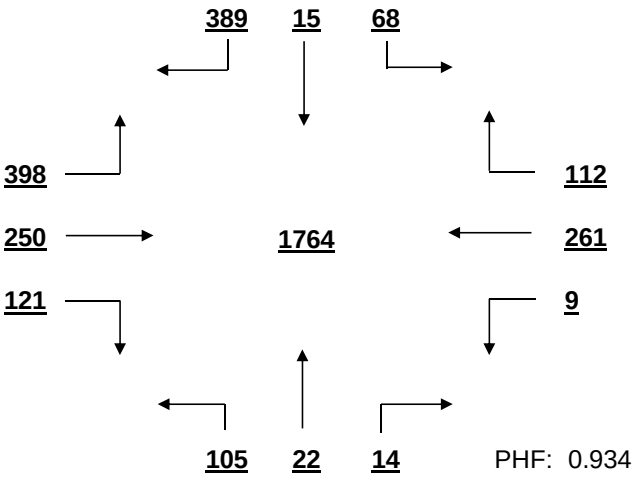

PHF: 0.934

OTHER HOUR VOLUME
FROM 7:00 TO 8:00

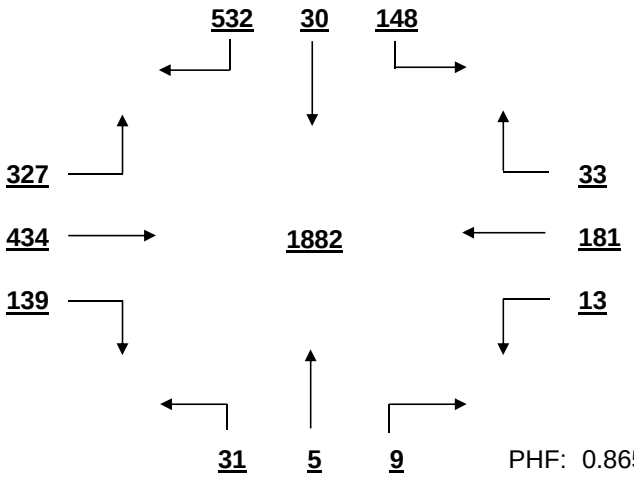

PHF: 0.865

SIGNAL WARRANT ANALYSIS

Lake Murray Blvd AT Kinley-Parkridge Dr Date: 11/22/2016

Minor Street Volume, percent of total = 36.2%
Percent of Left Turns from Minor Street = 31.0%
Percent of Right Turns from Minor Street = 62.8%
Percent of Minor Street Right Turns to Remove from Warrant Analysis = 0%
WARRANT BASIS = **70%**

Warrant No. 1 - Vehicular Volume is met

Condition A - Minimum Vehicular Volume is met

Average Major Street % of Warrant				Average Minor Street % of Warrant			
1085.3	/ 420	=	258%	481.3	/ 105	=	458%

Hourly percent of warrant

	7:00-8:00	8:00-9:00	9:00-10:00	10:00-11:00	11:00-12:00	12:00-13:00	13:00-14:00	14:00-15:00	15:00-16:00	16:00-17:00	17:00-18:00	18:00-19:00
Major St.	268%	239%	209%	187%	173%	213%	274%	250%	299%	335%	344%	310%
Minor St.	676%	507%	450%	408%	382%	389%	450%	462%	453%	485%	461%	378%

Condition B - Interruption to Continuous Traffic is met

Average Major Street % of Warrant				Average Minor Street % of Warrant			
1085.3	/ 630	=	172%	481.3	/ 53	=	917%

Hourly percent of warrant

	7:00-8:00	8:00-9:00	9:00-10:00	10:00-11:00	11:00-12:00	12:00-13:00	13:00-14:00	14:00-15:00	15:00-16:00	16:00-17:00	17:00-18:00	18:00-19:00
Major St.	179%	159%	140%	125%	116%	142%	183%	167%	199%	223%	229%	206%
Minor St.	1352%	1013%	901%	815%	764%	777%	899%	924%	907%	970%	922%	756%

80% Combination of Conditions A & B is not applicable

Warrant No. 2 - Four Hour Vehicular Volume is met

Hourly percent of warrant

	7:00-8:00	8:00-9:00	9:00-10:00	10:00-11:00	11:00-12:00	12:00-13:00	13:00-14:00	14:00-15:00	15:00-16:00	16:00-17:00	17:00-18:00	18:00-19:00
Minor St.	1183%	887%	763%	538%	430%	686%	787%	808%	793%	848%	807%	662%

Warrant No. 3 - Peak Hour is met

Overall Peak Hour: 16:30-17:30 — Percent of warrant
Minor St. 676%

Higher Volume Side Street Peak Hour: 7:00-8:00 — Percent of warrant
Minor St. 855%

Warrant No. 4 - Pedestrian Volume. Pedestrian volume shown are minumum volumes assuming heavy major street traffic. If these volumes are met, warrant 4 requires further engineering analysis

S

Minimum 4 hour ped. volume crossing major street: 75

Minimum peak hour ped. volume crossing major street: 93

Number of pedestrians crossing major street

	7:00-8:00	8:00-9:00	9:00-10:00	10:00-11:00	11:00-12:00	12:00-13:00	13:00-14:00	14:00-15:00	15:00-16:00	16:00-17:00	17:00-18:00	18:00-19:00
Major t.	0	0	0	0	0	2	0	1	1	1	0	0

Warrant No. 7 - Crash Experience (Requires 3 criteria analysis by engineering)

Total Number: 0 From: 1/1/2005 to 1/1/2008
Accident Rate: 0.00 per million entering vehicles

Types of Accidents	No.	/	Avg.		No.	/	Avg.
Right Angle	0	/	0.0	Rear End	0	/	0.0
Lost Control	0	/	0.0	Side Swipe	0	/	0.0
Left Turn	0	/	0.0	Other	0	/	0.0

SOUTH CAROLINA DEPARTMENT OF TRANSPORTATION
DISTRICT 1
TRAFFIC ENGINEERING

County: Richland City: Columbia Date: 11/28/2016

Major Rt: Lake Murray Blvd * Not on State System Minor Rt: Parkridge Dr * Not on State System

Day of Week: Monday Weather: Clear Office: Short Counts JMS

Type of Control: Signal Speed Limit (major st) 45

Direction of Minor Street: N-S Intersection ADT - 11730 (Calc)

Number of Lanes (major st)* 2 Number of Lanes (minor st)* 1

* Each Direction

INTERSECTION VOLUME SUMMARY

	From N Parkridge Dr				From S Parkridge Dr				From E Lake Murray Blvd				From W Lake Murray Blvd				Total	Total
	LT	STR	RT	TOT	LT	STR	RT	TOT	LT	STR	RT	TOT	LT	STR	RT	TOT	Vol	Peds
7:00 - 7:15	0	0	0	0	10	0	3	13	3	47	0	50	0	43	30	73	136	0
7:15 - 7:30	0	0	0	0	5	0	4	9	2	61	0	63	0	89	56	145	217	0
7:30 - 7:45	0	0	0	0	20	0	1	21	5	46	0	51	0	115	96	211	283	0
7:45 - 8:00	0	0	0	0	18	0	1	19	4	49	0	53	0	109	119	228	300	0
8:00 - 8:15	0	0	0	0	17	0	2	19	4	53	0	57	0	92	97	189	265	0
8:15 - 8:30	0	0	0	0	16	0	2	18	5	43	0	48	0	81	51	132	198	0
8:30 - 8:45	0	0	0	0	14	0	0	14	3	35	0	38	0	64	53	117	169	2
8:45 - 9:00	0	0	0	0	22	0	2	24	2	54	0	56	0	77	50	127	207	0
9:00 - 9:15	0	0	0	0	16	0	1	17	3	36	0	39	0	58	33	91	147	1
9:15 - 9:30	0	0	0	0	19	0	0	19	1	41	0	42	0	29	31	60	121	0
9:30 - 9:45	0	0	0	0	20	0	0	20	4	31	0	35	0	32	30	62	117	0
9:45 - 10:00	0	0	0	0	24	0	2	26	0	40	0	40	0	25	37	62	128	0
10:00 - 10:15	0	0	0	0	24	0	0	24	1	39	0	40	0	41	26	67	131	0
10:15 - 10:30	0	0	0	0	21	0	2	23	3	28	0	31	0	35	37	72	126	0
10:30 - 10:45	0	0	0	0	18	0	0	18	4	17	0	21	0	15	26	41	80	0
10:45 - 11:00	0	0	0	0	36	0	3	39	3	20	0	23	0	20	32	52	114	0
11:00 - 11:15	0	0	0	0	35	0	2	37	4	39	0	43	0	29	26	55	135	0
11:15 - 11:30	0	0	0	0	26	0	1	27	3	46	0	49	0	30	41	71	147	0
11:30 - 11:45	0	0	0	0	24	0	4	28	2	49	0	51	0	31	45	76	155	0
11:45 - 12:00	0	0	0	0	32	0	4	36	4	55	0	59	0	53	44	97	192	0
12:00 - 12:15	0	0	0	0	44	0	2	46	0	53	0	53	0	44	43	87	186	0
12:15 - 12:30	0	0	0	0	45	0	1	46	1	54	0	55	0	46	53	99	200	0
12:30 - 12:45	0	0	0	0	34	0	3	37	4	49	0	53	0	54	39	93	183	0
12:45 - 13:00	0	0	0	0	26	0	0	26	3	39	0	42	0	39	44	83	151	0
13:00 - 13:15	0	0	0	0	39	0	2	41	1	55	0	56	0	46	52	98	195	0
13:15 - 13:30	0	0	0	0	35	0	4	39	3	25	0	28	0	36	26	62	129	0
13:30 - 13:45	0	0	0	0	51	0	1	52	4	32	0	36	0	36	36	72	160	0
13:45 - 14:00	0	0	0	0	45	0	6	51	0	37	0	37	0	37	32	69	157	0
14:00 - 14:15	0	0	0	0	45	0	5	50	1	42	0	43	0	32	30	62	155	0
14:15 - 14:30	0	0	0	0	46	0	5	51	2	55	0	57	0	52	38	90	198	0
14:30 - 14:45	0	0	0	0	41	0	3	44	0	35	0	35	0	40	33	73	152	0
14:45 - 15:00	0	0	0	0	45	0	3	48	2	46	0	48	0	43	33	76	172	0
15:00 - 15:15	0	0	0	0	44	0	3	47	2	51	0	53	0	53	26	79	179	0
15:15 - 15:30	0	0	0	0	39	0	2	41	6	59	0	65	0	40	38	78	184	0
15:30 - 15:45	0	0	0	0	52	0	5	57	2	60	0	62	0	40	31	71	190	0
15:45 - 16:00	0	0	0	0	58	0	2	60	3	63	0	66	0	48	29	77	203	0
16:00 - 16:15	0	0	0	0	49	0	5	54	1	66	0	67	0	62	32	94	215	0
16:15 - 16:30	0	0	0	0	58	0	3	61	3	102	0	105	0	78	37	115	281	0
16:30 - 16:45	0	0	0	0	72	0	8	80	0	90	0	90	0	69	32	101	271	0
16:45 - 17:00	0	0	0	0	34	0	3	37	1	91	0	92	0	59	28	87	216	0
17:00 - 17:15	0	0	0	0	60	0	5	65	1	137	0	138	0	76	27	103	306	0
17:15 - 17:30	0	0	0	0	79	0	8	87	4	138	0	142	0	75	32	107	336	0
17:30 - 17:45	0	0	0	0	55	0	4	59	2	101	0	103	0	90	28	118	280	0
17:45 - 18:00	0	0	0	0	55	0	5	60	3	94	0	97	0	62	32	94	251	0
18:00 - 18:15	0	0	0	0	52	0	2	54	3	65	0	68	0	69	28	97	219	0
18:15 - 18:30	0	0	0	0	45	0	2	47	3	53	0	56	0	66	21	87	190	0
18:30 - 18:45	0	0	0	0	36	0	2	38	2	43	0	45	0	45	31	76	159	0
18:45 - 19:00	0	0	0	0	42	0	3	45	1	44	0	45	0	57	27	84	174	0
TOTAL	0	0	0	0	1743	0	131	1874	118	2608	0	2726	0	2562	1898	4460	9060	3
Trucks	0	0	0	0	3	0	0	3	0	9	0	9	0	9	2	11	23	0.3%
School Buses	0	0	0	0	1	0	0	1	0	8	0	8	0	13	0	13	22	0.2%

TOTAL AND PEAK HOUR VOLUME DIAGRAMS

Lake Murray Blvd AT Parkridge Dr Date: 11/28/2016

12.0 HOUR TOTAL VOLUME
FROM 7:00 TO 15:00

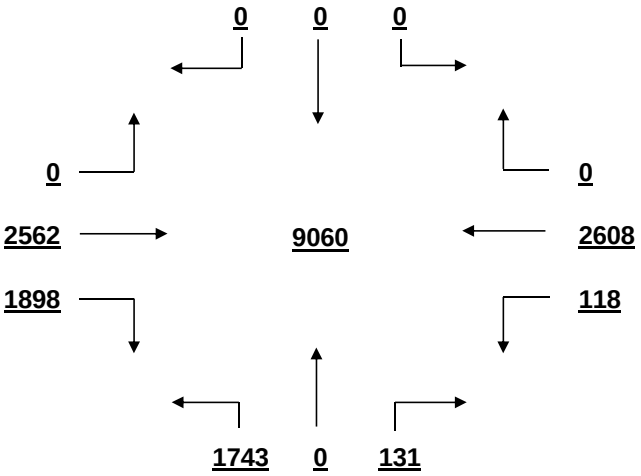

OVERALL PEAK HOUR VOLUME
FROM 17:00 TO 18:00

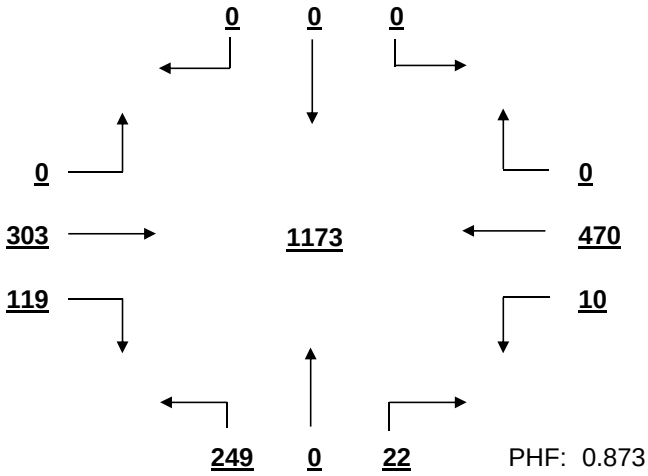

PHF: 0.873

AM PEAK HOUR VOLUME (0:00-10:45)
FROM 7:15 TO 8:15

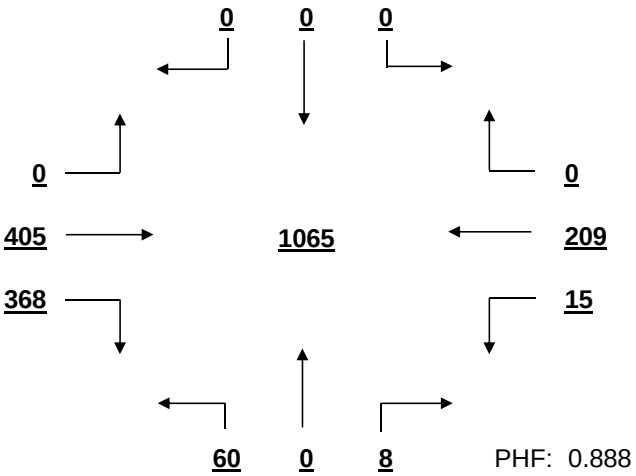

PHF: 0.888

PM PEAK HOUR VOLUME (14:15-23:45)
FROM 17:00 TO 18:00

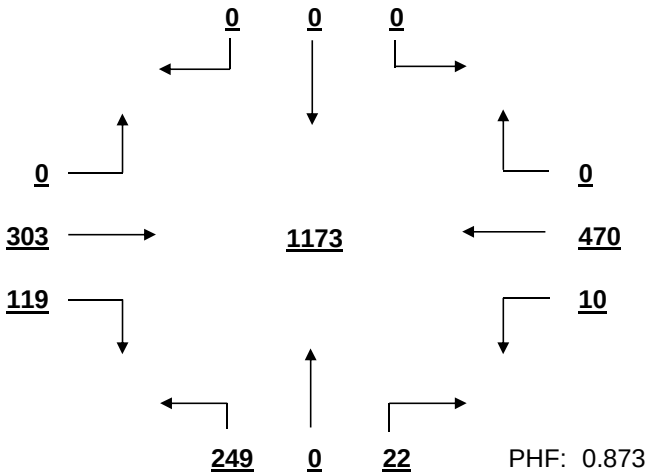

PHF: 0.873

MID-DAY PEAK HOUR VOLUME (11:00-14:00)
FROM 11:45 TO 12:45

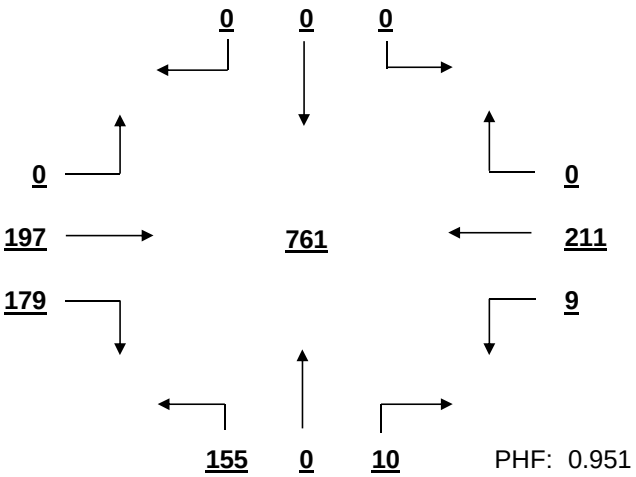

PHF: 0.951

OTHER HOUR VOLUME
FROM 7:00 TO 8:00

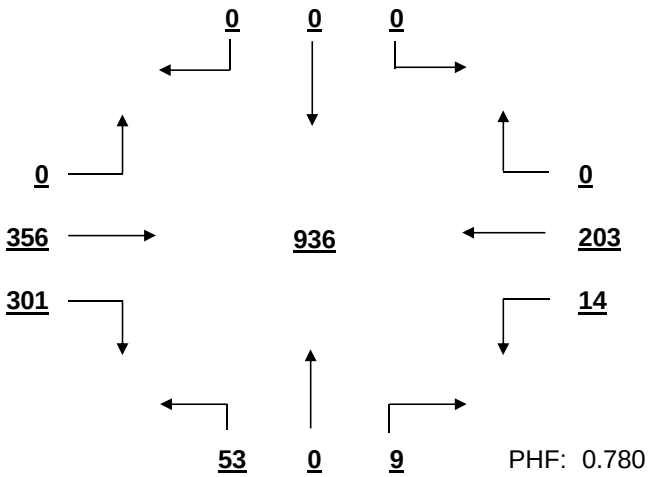

PHF: 0.780

SIGNAL WARRANT ANALYSIS

Lake Murray Blvd AT Parkridge Dr Date: 11/28/2016

Minor Street Volume, percent of total = 20.7%
Percent of Left Turns from Minor Street = = 93.0%
Percent of Right Turns from Minor Street = 7.0%
Percent of Minor Street Right Turns to Remove from Warrant Analysis = 0%
WARRANT BASIS = **70%**

Warrant No. 1 - Vehicular Volume is met

Condition A - Minimum Vehicular Volume is met

Average Major Street			% of Warrant	Average Minor Street			% of Warrant
598.8	/ 420	=	143%	156.2	/ 105	=	149%

Hourly percent of warrant

	7:00 - 8:00	8:00 - 9:00	9:00 - 10:00	10:00 - 11:00	11:00 - 12:00	12:00 - 13:00	13:00 - 14:00	14:00 - 15:00	15:00 - 16:00	16:00 - 17:00	17:00 - 18:00	18:00 - 19:00
Major St.	208%	182%	103%	83%	119%	135%	109%	115%	131%	179%	215%	133%
Minor St.	59%	71%	78%	99%	122%	148%	174%	184%	195%	221%	258%	175%

Condition B - Interruption to Continuous Traffic is not met

Average Major Street			% of Warrant	Average Minor Street			% of Warrant
598.8	/ 630	=	95%	156.2	/ 53	=	297%

Hourly percent of warrant

	7:00 - 8:00	8:00 - 9:00	9:00 - 10:00	10:00 - 11:00	11:00 - 12:00	12:00 - 13:00	13:00 - 14:00	14:00 - 15:00	15:00 - 16:00	16:00 - 17:00	17:00 - 18:00	18:00 - 19:00
Major St.	139%	121%	68%	55%	80%	90%	73%	77%	87%	119%	143%	89%
Minor St.	118%	143%	156%	198%	244%	295%	349%	368%	390%	442%	516%	350%

80% Combination of Conditions A & B is not applicable

Warrant No. 2 - Four Hour Vehicular Volume is met

Hourly percent of warrant

	7:00 - 8:00	8:00 - 9:00	9:00 - 10:00	10:00 - 11:00	11:00 - 12:00	12:00 - 13:00	13:00 - 14:00	14:00 - 15:00	15:00 - 16:00	16:00 - 17:00	17:00 - 18:00	18:00 - 19:00
Minor St.	99%	89%	41%	44%	76%	108%	98%	110%	138%	265%	463%	126%

Warrant No. 3 - Peak Hour is met

Overall Peak Hour: 17:00 - 18:00 — Percent of warrant
Minor St. 206%

Higher Volume Side Street Peak Hour: 17:00 - 18:00 — Percent of warrant
Minor St. 206%

Warrant No. 4 - Pedestrian Volume. Pedestrian volume shown are minumum volumes assuming heavy major street traffic. If these volumes are met, warrant 4 requires further engineering analysis

S

Minimum 4 hour ped. volume crossing major street: 75

Minimum peak hour ped. volume crossing major street: 93

Number of pedestrians crossing major street

	7:00 - 8:00	8:00 - 9:00	9:00 - 10:00	10:00 - 11:00	11:00 - 12:00	12:00 - 13:00	13:00 - 14:00	14:00 - 15:00	15:00 - 16:00	16:00 - 17:00	17:00 - 18:00	18:00 - 19:00
Major t.	0	2	1	0	0	0	0	0	0	0	0	0

Warrant No. 7 - Crash Experience (Requires 3 criteria analysis by engineering)

Total Number: 0 From: 1/1/2005 to 1/1/2008
Accident Rate: 0.00 per million entering vehicles

Types of Accidents	No.	/	Avg.		No.	/	Avg.
Right Angle	0	/	0.0	Rear End	0	/	0.0
Lost Control	0	/	0.0	Side Swipe	0	/	0.0
Left Turn	0	/	0.0	Other	0	/	0.0

SOUTH CAROLINA DEPARTMENT OF TRANSPORTATION
DISTRICT 1
TRAFFIC ENGINEERING

County: Richland City: Columbia Date: 11/28/2016

Major Rt: Columbiana Dr * Not on State System Minor Rt: Columbia Ave-Gateway Academy * Not on State System

Day of Week: Monday Weather: Clear Office: Short Counts JMS

Type of Control: Signal Speed Limit (major st) 30

Direction of Minor Street: N-S Intersection ADT - 12900 (Calc)

Number of Lanes (major st)* 1 Number of Lanes (minor st)* 1

* Each Direction

INTERSECTION VOLUME SUMMARY

	From N Columbia Ave-Gatew				From S Columbia Ave-Gatew				From E Columbiana Dr				From W Columbiana Dr				Total	Total
	LT	STR	RT	TOT	LT	STR	RT	TOT	LT	STR	RT	TOT	LT	STR	RT	TOT	Vol	Peds
7:00 - 7:15	1	0	6	7	4	0	5	9	3	40	0	43	0	63	0	63	122	0
7:15 - 7:30	4	0	9	13	3	0	4	7	1	67	0	68	3	111	1	115	203	0
7:30 - 7:45	4	0	10	14	5	0	7	12	2	58	0	60	1	169	4	174	260	0
7:45 - 8:00	5	0	8	13	3	0	4	7	2	27	0	29	1	85	0	86	135	0
8:00 - 8:15	5	0	5	10	5	0	9	14	3	40	0	43	1	91	3	95	162	0
8:15 - 8:30	5	2	6	13	6	0	6	12	4	35	0	39	1	80	2	83	147	0
8:30 - 8:45	3	0	6	9	8	0	3	11	5	32	0	37	0	72	3	75	132	0
8:45 - 9:00	0	0	2	2	5	0	10	15	7	27	1	35	0	86	3	89	141	1
9:00 - 9:15	0	0	1	1	3	0	3	6	2	24	0	26	0	53	1	54	87	0
9:15 - 9:30	1	0	2	3	1	0	9	10	3	48	0	51	1	80	3	84	148	0
9:30 - 9:45	0	0	1	1	2	0	3	5	1	36	0	37	0	113	0	113	156	0
9:45 - 10:00	0	0	2	2	1	0	4	5	4	44	0	48	0	95	7	102	157	0
10:00 - 10:15	1	0	2	3	1	0	8	9	3	41	1	45	0	99	1	100	157	0
10:15 - 10:30	0	0	0	0	3	0	3	6	3	60	0	63	0	108	0	108	177	0
10:30 - 10:45	1	0	0	1	4	0	5	9	6	45	0	51	0	93	2	95	156	0
10:45 - 11:00	2	0	0	2	5	0	5	10	7	69	0	76	0	127	3	130	218	0
11:00 - 11:15	0	0	0	0	6	0	9	15	8	106	0	114	0	116	5	121	250	0
11:15 - 11:30	0	0	0	0	6	0	13	19	10	86	0	96	1	126	3	130	245	0
11:30 - 11:45	1	0	3	4	7	0	16	23	6	101	0	107	0	137	1	138	272	0
11:45 - 12:00	2	0	2	4	4	0	18	22	6	109	0	115	0	120	3	123	264	0
12:00 - 12:15	0	0	0	0	4	0	13	17	7	108	0	115	0	178	4	182	314	0
12:15 - 12:30	1	0	1	2	4	0	15	19	9	116	0	125	0	145	6	151	297	0
12:30 - 12:45	1	0	1	2	9	0	12	21	9	117	0	126	0	145	4	149	298	0
12:45 - 13:00	1	0	0	1	3	0	6	9	20	151	0	171	0	131	4	135	316	0
13:00 - 13:15	0	0	1	1	2	0	7	9	1	93	0	94	0	105	1	106	210	0
13:15 - 13:30	0	0	1	1	3	0	9	12	7	109	0	116	0	89	2	91	220	0
13:30 - 13:45	0	0	1	1	3	0	5	8	6	121	0	127	0	118	2	120	256	0
13:45 - 14:00	1	0	0	1	2	0	7	9	11	137	0	148	0	126	9	135	293	0
14:00 - 14:15	0	0	1	1	2	0	7	9	13	134	0	147	0	111	5	116	273	0
14:15 - 14:30	0	0	0	0	5	0	7	12	10	115	0	125	0	133	5	138	275	0
14:30 - 14:45	0	0	1	1	2	0	9	11	8	134	1	143	1	108	6	115	270	0
14:45 - 15:00	1	0	2	3	6	0	7	13	8	113	0	121	0	117	4	121	258	0
15:00 - 15:15	0	0	2	2	4	0	2	6	4	124	0	128	1	90	2	93	229	0
15:15 - 15:30	0	2	1	3	5	0	5	10	20	115	0	135	0	100	4	104	252	0
15:30 - 15:45	1	0	3	4	3	0	8	11	9	103	0	112	0	97	5	102	229	0
15:45 - 16:00	0	0	0	0	3	0	8	11	2	93	0	95	0	109	4	113	219	0
16:00 - 16:15	3	0	6	9	1	0	6	7	7	114	0	121	0	137	3	140	277	0
16:15 - 16:30	2	0	3	5	5	0	8	13	5	143	0	148	0	160	10	170	336	0
16:30 - 16:45	1	1	11	13	3	0	9	12	5	143	0	148	2	112	15	129	302	0
16:45 - 17:00	2	0	7	9	3	0	13	16	9	130	0	139	0	139	3	142	306	0
17:00 - 17:15	3	1	19	23	5	0	16	21	7	134	0	141	0	149	8	157	342	0
17:15 - 17:30	2	2	4	8	6	0	9	15	9	114	0	123	0	142	5	147	293	0
17:30 - 17:45	1	2	10	13	6	0	17	23	13	123	0	136	0	136	4	140	312	0
17:45 - 18:00	2	0	14	16	2	0	5	7	11	117	0	128	0	155	6	161	312	0
18:00 - 18:15	2	1	11	14	5	0	5	10	9	141	0	150	0	143	5	148	322	0
18:15 - 18:30	1	1	9	11	6	0	5	11	11	133	0	144	0	173	5	178	344	0
18:30 - 18:45	1	0	4	5	0	0	2	2	6	138	0	144	0	157	2	159	310	0
18:45 - 19:00	0	0	0	0	0	0	0	0	7	81	0	88	0	85	3	88	176	0
TOTAL	61	12	178	251	184	0	366	550	329	4489	3	4821	13	5614	181	5808	11430	1
Trucks	0	0	0	0	0	0	2	2	0	16	0	16	0	9	1	10	28	0.2%
School Buses	0	0	0	0	1	0	1	2	2	9	0	11	0	15	0	15	28	0.2%

TOTAL AND PEAK HOUR VOLUME DIAGRAMS

Columbiana Dr AT Columbia Ave-Gateway Academy Date: 11/28/2016

12.0 HOUR TOTAL VOLUME
FROM 7:00 TO 15:00

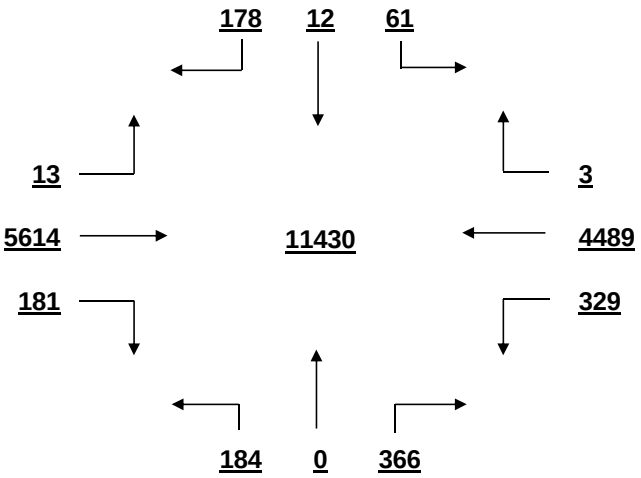

OVERALL PEAK HOUR VOLUME
FROM 17:30 TO 18:30

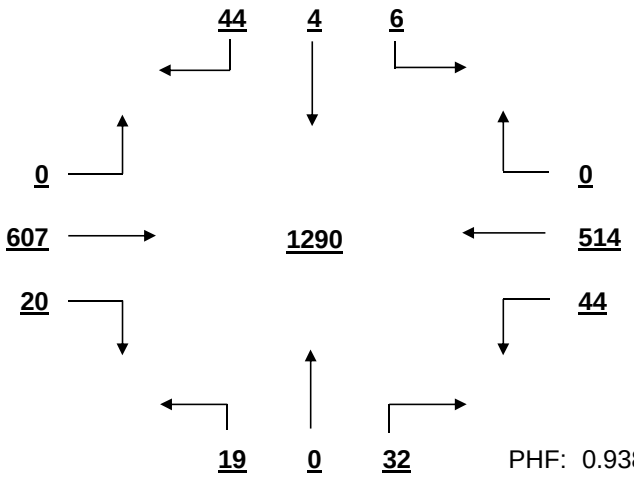

PHF: 0.938

AM PEAK HOUR VOLUME (0:00-10:45)
FROM 7:15 TO 8:15

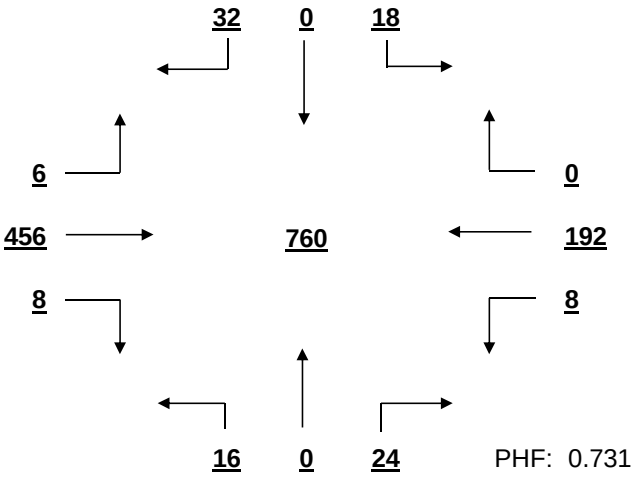

PHF: 0.731

PM PEAK HOUR VOLUME (14:15-23:45)
FROM 17:30 TO 18:30

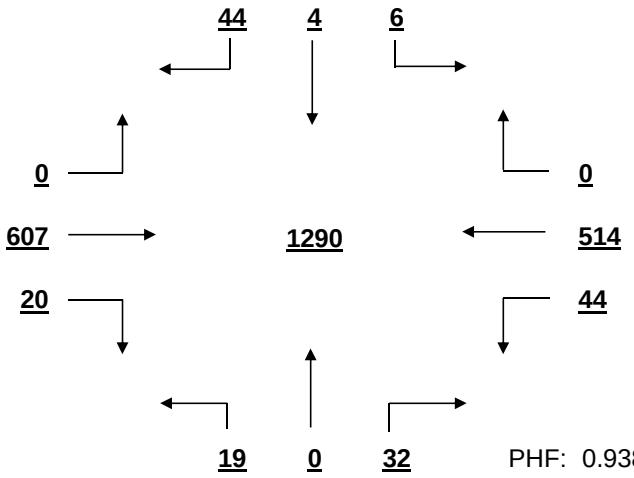

PHF: 0.938

MID-DAY PEAK HOUR VOLUME (11:00-14:00)
FROM 12:00 TO 13:00

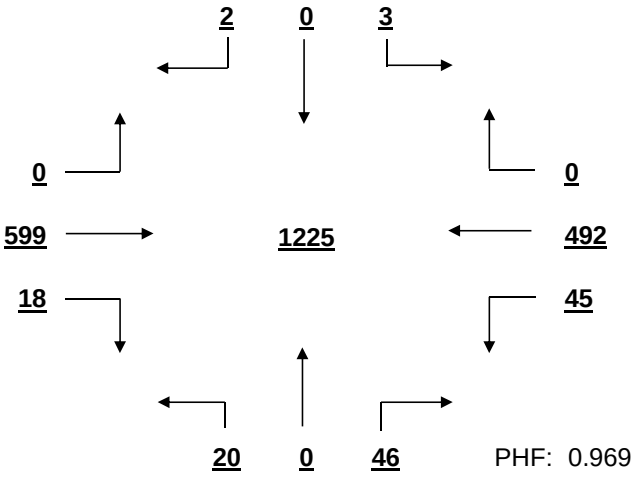

PHF: 0.969

OTHER HOUR VOLUME
FROM 7:00 TO 8:00

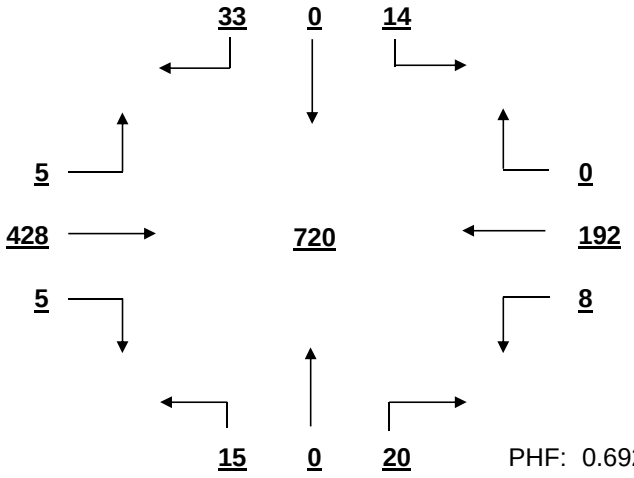

PHF: 0.692

SIGNAL WARRANT ANALYSIS

Columbiana Dr AT Columbia Ave-Gateway Academy Date: 11/28/2016

Minor Street Volume, percent of total = 7.0%
Percent of Left Turns from Minor Street = 30.6%
Percent of Right Turns from Minor Street = 67.9%
Percent of Minor Street Right Turns to Remove from Warrant Analysis = 0%
WARRANT BASIS = **100%**

Warrant No. 1 - Vehicular Volume is not met

Condition A - Minimum Vehicular Volume is not met

Average Major Street % of Warrant				Average Minor Street % of Warrant			
885.8	/ 500	=	177%	45.8	/ 150	=	31%

Hourly percent of warrant

	7:00 - 8:00	8:00 - 9:00	9:00 - 10:00	10:00 - 11:00	11:00 - 12:00	12:00 - 13:00	13:00 - 14:00	14:00 - 15:00	15:00 - 16:00	16:00 - 17:00	17:00 - 18:00	18:00 - 19:00
Major St.	128%	99%	103%	134%	189%	231%	187%	205%	176%	227%	227%	220%
Minor St.	31%	35%	17%	23%	53%	44%	25%	30%	25%	32%	44%	20%

Condition B - Interruption to Continuous Traffic is not met

Average Major Street % of Warrant				Average Minor Street % of Warrant			
885.8	/ 750	=	118%	45.8	/ 75	=	61%

Hourly percent of warrant

	7:00 - 8:00	8:00 - 9:00	9:00 - 10:00	10:00 - 11:00	11:00 - 12:00	12:00 - 13:00	13:00 - 14:00	14:00 - 15:00	15:00 - 16:00	16:00 - 17:00	17:00 - 18:00	18:00 - 19:00
Major St.	85%	66%	69%	89%	126%	154%	125%	137%	118%	152%	151%	147%
Minor St.	63%	69%	35%	45%	105%	88%	51%	60%	51%	64%	88%	40%

80% Combination of Conditions A & B is not met

Warrant No. 2 - Four Hour Vehicular Volume is not met

Hourly percent of warrant

	7:00 - 8:00	8:00 - 9:00	9:00 - 10:00	10:00 - 11:00	11:00 - 12:00	12:00 - 13:00	13:00 - 14:00	14:00 - 15:00	15:00 - 16:00	16:00 - 17:00	17:00 - 18:00	18:00 - 19:00
Minor St.	23%	20%	10%	18%	71%	83%	34%	48%	30%	64%	87%	37%

Warrant No. 3 - Peak Hour is not met

Overall Peak Hour: 17:30 - 18:30 — Percent of warrant — Minor St. 36%

Higher Volume Side Street Peak Hour: 11:15 - 12:15 — Percent of warrant — Minor St. 40%

Warrant No. 4 - Pedestrian Volume. Pedestrian volume shown are minumum volumes assuming heavy major street traffic. If these volumes are met, warrant 4 requires further engineering analysis

S

Minimum 4 hour ped. volume crossing major street: 107

Minimum peak hour ped. volume crossing major street: 133

Number of pedestrians crossing major street

	7:00 - 8:00	8:00 - 9:00	9:00 - 10:00	10:00 - 11:00	11:00 - 12:00	12:00 - 13:00	13:00 - 14:00	14:00 - 15:00	15:00 - 16:00	16:00 - 17:00	17:00 - 18:00	18:00 - 19:00
Major t.	0	1	0	0	0	0	0	0	0	0	0	0

Warrant No. 7 - Crash Experience (Requires 3 criteria analysis by engineering)

Total Number: 0 From: 1/1/2005 to 1/1/2008

Accident Rate: 0.00 per million entering vehicles

Types of Accidents	No.	/	Avg.		No.	/	Avg.
Right Angle	0	/	0.0	Rear End	0	/	0.0
Lost Control	0	/	0.0	Side Swipe	0	/	0.0
Left Turn	0	/	0.0	Other	0	/	0.0

SOUTH CAROLINA DEPARTMENT OF TRANSPORTATION
DISTRICT 1
TRAFFIC ENGINEERING

County: Richland City: Columbia Date: 11/30/2016

Major Rt: Columbiana Dr * Not on State System Minor Rt: Crossbow Dr-Texas Roadhouse * Not on State System

Day of Week: Wednesday Weather: Rain Office: Short Counts JMS

Type of Control: Signal Speed Limit (major st) 30

Direction of Minor Street: N-S Intersection ADT - 15540 (Calc)

Number of Lanes (major st)* 1 Number of Lanes (minor st)* 1

* Each Direction

INTERSECTION VOLUME SUMMARY

	From N Crossbow Dr-Texas				From S Crossbow Dr-Texas				From E Columbiana Dr				From W Columbiana Dr				Total	Total
	LT	STR	RT	TOT	LT	STR	RT	TOT	LT	STR	RT	TOT	LT	STR	RT	TOT	Vol	Peds
7:00 - 7:15	0	0	0	0	18	0	10	28	15	28	0	43	0	50	40	90	161	0
7:15 - 7:30	0	0	0	0	25	0	27	52	26	26	1	53	0	59	43	102	207	0
7:30 - 7:45	0	0	0	0	29	0	26	55	38	34	0	72	0	108	63	171	298	0
7:45 - 8:00	0	0	0	0	26	0	28	54	21	30	0	51	1	141	34	176	281	0
8:00 - 8:15	0	0	0	0	10	0	17	27	0	32	1	33	1	154	8	163	223	0
8:15 - 8:30	0	0	0	0	12	0	13	25	4	38	1	43	1	179	5	185	253	0
8:30 - 8:45	0	0	0	0	7	0	8	15	4	37	0	41	1	159	9	169	225	0
8:45 - 9:00	0	0	0	0	9	0	8	17	3	17	0	20	0	77	4	81	118	0
9:00 - 9:15	0	0	0	0	5	0	6	11	1	17	0	18	0	65	3	68	97	0
9:15 - 9:30	1	0	0	1	5	0	3	8	2	12	2	16	2	53	2	57	82	0
9:30 - 9:45	0	0	1	1	6	0	4	10	2	37	1	40	0	97	2	99	150	0
9:45 - 10:00	0	0	0	0	4	0	10	14	0	43	4	47	2	121	6	129	190	0
10:00 - 10:15	2	0	1	3	16	1	4	21	4	36	2	42	5	122	3	130	196	0
10:15 - 10:30	2	0	0	2	11	0	10	21	3	47	3	53	0	114	11	125	201	0
10:30 - 10:45	2	0	1	3	15	0	3	18	1	61	7	69	1	131	2	134	224	0
10:45 - 11:00	2	0	1	3	5	1	6	12	5	66	3	74	3	124	5	132	221	0
11:00 - 11:15	1	0	1	2	6	0	9	15	6	67	12	85	2	131	3	136	238	1
11:15 - 11:30	2	0	2	4	7	0	0	7	3	89	12	104	8	134	6	148	263	0
11:30 - 11:45	3	0	6	9	9	0	5	14	3	89	7	99	6	136	4	146	268	0
11:45 - 12:00	2	0	4	6	8	0	7	15	7	102	6	115	17	138	11	166	302	0
12:00 - 12:15	6	0	5	11	8	0	12	20	5	113	5	123	4	179	7	190	344	0
12:15 - 12:30	6	0	12	18	11	0	4	15	3	118	15	136	8	180	4	192	361	0
12:30 - 12:45	5	0	10	15	7	0	8	15	5	114	8	127	10	183	4	197	354	1
12:45 - 13:00	2	0	6	8	10	0	10	20	3	119	7	129	6	157	5	168	325	0
13:00 - 13:15	6	0	8	14	10	0	4	14	11	120	8	139	4	155	3	162	329	1
13:15 - 13:30	8	0	4	12	4	0	1	5	6	118	6	130	4	107	4	115	262	1
13:30 - 13:45	5	0	7	12	11	0	5	16	2	154	8	164	9	124	7	140	332	1
13:45 - 14:00	4	0	2	6	5	0	8	13	7	106	7	120	9	77	2	88	227	0
14:00 - 14:15	5	0	5	10	4	0	8	12	19	124	4	147	5	106	12	123	292	1
14:15 - 14:30	6	0	2	8	18	0	13	31	19	163	7	189	6	130	15	151	379	0
14:30 - 14:45	6	0	10	16	11	0	7	18	7	133	6	146	3	119	15	137	317	1
14:45 - 15:00	3	0	7	10	40	0	11	51	12	127	9	148	5	107	18	130	339	0
15:00 - 15:15	8	0	2	10	34	1	18	53	5	127	10	142	1	129	13	143	348	1
15:15 - 15:30	5	1	11	17	23	0	10	33	13	115	6	134	8	103	6	117	301	0
15:30 - 15:45	7	0	4	11	10	0	8	18	9	123	6	138	6	127	6	139	306	0
15:45 - 16:00	3	0	6	9	21	0	7	28	11	112	5	128	5	138	10	153	318	0
16:00 - 16:15	6	0	6	12	23	1	10	34	12	128	10	150	10	118	14	142	338	1
16:15 - 16:30	6	0	8	14	23	0	22	45	8	126	13	147	6	120	10	136	342	0
16:30 - 16:45	7	0	10	17	11	0	16	27	8	130	14	152	9	151	12	172	368	5
16:45 - 17:00	7	1	9	17	18	0	15	33	11	152	13	176	5	166	9	180	406	0
17:00 - 17:15	3	0	7	10	10	0	9	19	9	135	7	151	10	144	6	160	340	1
17:15 - 17:30	4	0	6	10	16	1	12	29	10	147	15	172	15	152	13	180	391	0
17:30 - 17:45	6	0	10	16	16	0	17	33	25	132	7	164	14	150	11	175	388	0
17:45 - 18:00	7	0	10	17	20	0	14	34	21	142	10	173	14	171	16	201	425	0
18:00 - 18:15	12	0	16	28	16	0	10	26	10	115	10	135	12	144	5	161	350	0
18:15 - 18:30	7	1	6	14	7	1	6	14	18	120	11	149	16	128	6	150	327	0
18:30 - 18:45	5	0	13	18	7	4	11	22	9	144	17	170	7	141	2	150	360	0
18:45 - 19:00	10	2	10	22	10	0	9	19	5	139	12	156	8	103	3	114	311	0
TOTAL	182	5	229	416	637	10	489	1136	431	4504	318	5253	269	6102	502	6873	13678	15
Trucks	0	0	0	0	1	0	1	2	1	5	2	8	1	10	0	11	21	0.2%
School Buses	0	0	0	0	13	0	2	15	2	7	0	9	0	10	6	16	40	0.3%

TOTAL AND PEAK HOUR VOLUME DIAGRAMS

Columbiana Dr AT Crossbow Dr-Texas Roadhouse Date: 11/30/2016

12.0 HOUR TOTAL VOLUME
FROM 7:00 TO 15:00

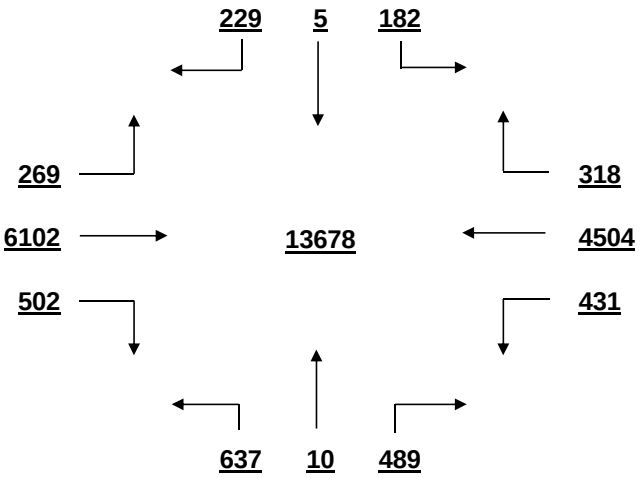

OVERALL PEAK HOUR VOLUME
FROM 17:15 TO 18:15

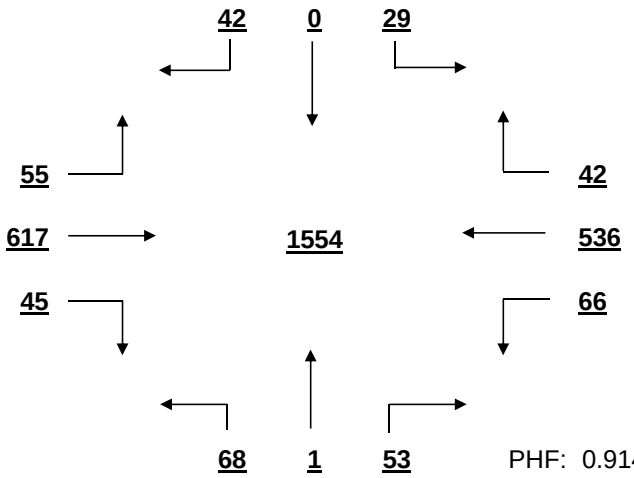

PHF: 0.914

AM PEAK HOUR VOLUME (0:00-10:45)
FROM 7:30 TO 8:30

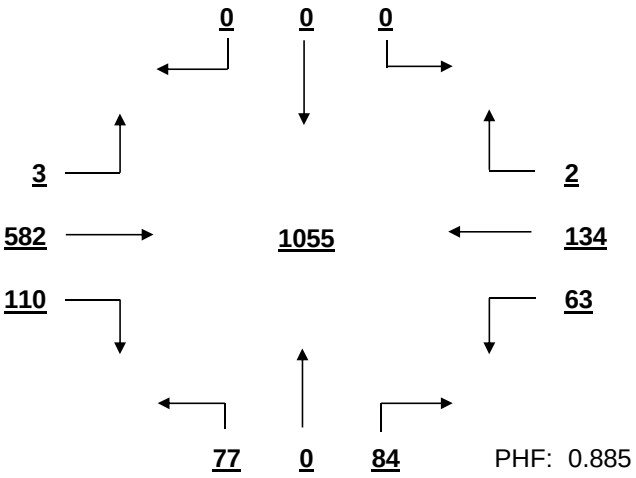

PHF: 0.885

PM PEAK HOUR VOLUME (14:15-23:45)
FROM 17:15 TO 18:15

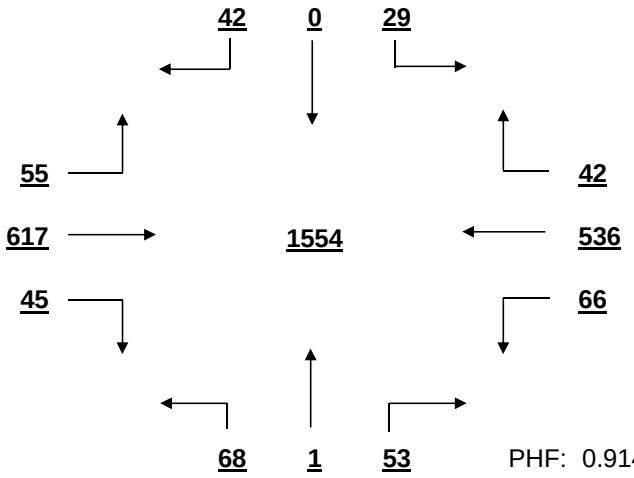

PHF: 0.914

MID-DAY PEAK HOUR VOLUME (11:00-14:00)
FROM 12:00 TO 13:00

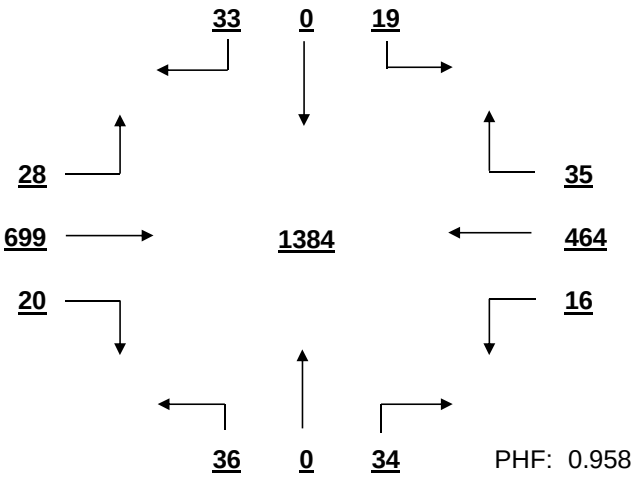

PHF: 0.958

OTHER HOUR VOLUME
FROM 7:00 TO 8:00

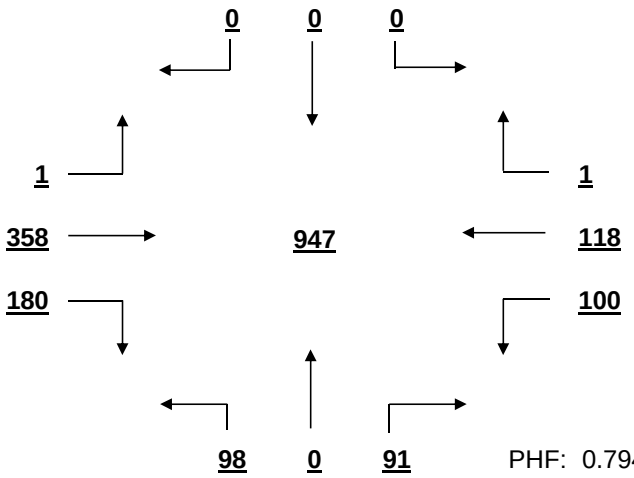

PHF: 0.794

SIGNAL WARRANT ANALYSIS

Columbiana Dr AT Crossbow Dr-Texas Roadhouse Date: 11/30/2016

Minor Street Volume, percent of total = 11.3%
Percent of Left Turns from Minor Street = = 52.8%
Percent of Right Turns from Minor Street = 46.3%
Percent of Minor Street Right Turns to Remove from Warrant Analysis = 0%
WARRANT BASIS = **100%**

Warrant No. 1 - Vehicular Volume is not met

Condition A - Minimum Vehicular Volume is not met

Average Major Street % of Warrant				Average Minor Street % of Warrant			
1010.5	/ 500	=	202%	94.7	/ 150	=	63%

Hourly percent of warrant

	7:00 - 8:00	8:00 - 9:00	9:00 - 10:00	10:00 - 11:00	11:00 - 12:00	12:00 - 13:00	13:00 - 14:00	14:00 - 15:00	15:00 - 16:00	16:00 - 17:00	17:00 - 18:00	18:00 - 19:00
Major St.	152%	147%	95%	152%	200%	252%	212%	234%	219%	251%	275%	237%
Minor St.	126%	56%	29%	48%	34%	47%	32%	75%	88%	93%	77%	55%

Condition B - Interruption to Continuous Traffic is not met

Average Major Street % of Warrant				Average Minor Street % of Warrant			
1010.5	/ 750	=	135%	94.7	/ 75	=	126%

Hourly percent of warrant

	7:00 - 8:00	8:00 - 9:00	9:00 - 10:00	10:00 - 11:00	11:00 - 12:00	12:00 - 13:00	13:00 - 14:00	14:00 - 15:00	15:00 - 16:00	16:00 - 17:00	17:00 - 18:00	18:00 - 19:00
Major St.	101%	98%	63%	101%	133%	168%	141%	156%	146%	167%	183%	158%
Minor St.	252%	112%	57%	96%	68%	93%	64%	149%	176%	185%	153%	109%

80% Combination of Conditions A & B is not met

Warrant No. 2 - Four Hour Vehicular Volume is met

Hourly percent of warrant

	7:00 - 8:00	8:00 - 9:00	9:00 - 10:00	10:00 - 11:00	11:00 - 12:00	12:00 - 13:00	13:00 - 14:00	14:00 - 15:00	15:00 - 16:00	16:00 - 17:00	17:00 - 18:00	18:00 - 19:00
Minor St.	117%	50%	16%	45%	52%	88%	55%	140%	162%	174%	144%	103%

Warrant No. 3 - Peak Hour is met

		Percent of warrant			Percent of warrant
Overall Peak Hour:	17:15 - 18:15		Higher Volume Side Street Peak Hour:	7:00 - 8:00	
Minor St.	105%		Minor St.	64%	

Warrant No. 4 - Pedestrian Volume. Pedestrian volume shown are minumum volumes assuming heavy major street traffic. If these volumes are met, warrant 4 requires further engineering analysis

S

Minimum 4 hour ped. volume crossing major street: 107

Minimum peak hour ped. volume crossing major street: 133

Number of pedestrians crossing major street

	7:00 - 8:00	8:00 - 9:00	9:00 - 10:00	10:00 - 11:00	11:00 - 12:00	12:00 - 13:00	13:00 - 14:00	14:00 - 15:00	15:00 - 16:00	16:00 - 17:00	17:00 - 18:00	18:00 - 19:00
Major t.	0	0	0	0	1	1	3	2	0	6	1	0

Warrant No. 7 - Crash Experience (Requires 3 criteria analysis by engineering)

Total Number: 0 From: 1/1/2005 to 1/1/2008

Accident Rate: 0.00 per million entering vehicles

Types of Accidents	No.	/	Avg.		No.	/	Avg.
Right Angle	0	/	0.0	Rear End	0	/	0.0
Lost Control	0	/	0.0	Side Swipe	0	/	0.0
Left Turn	0	/	0.0	Other	0	/	0.0

SOUTH CAROLINA DEPARTMENT OF TRANSPORTATION
DISTRICT 1
TRAFFIC ENGINEERING

County: Richland City: Columbia Date: 11/29/2016

Major Rt: Columbiana Dr * Not on State System Minor Rt: Columbiana Cir-Lanneau Ct * Not on State System

Day of Week: Tuesday Weather: Rain Office: Short Counts JMS

Type of Control: Signal Speed Limit (major st) 30

Direction of Minor Street: E-W Intersection ADT - 13720 (Calc)

Number of Lanes (major st)* 2 Number of Lanes (minor st)* 1 * Each Direction

INTERSECTION VOLUME SUMMARY

	From N Columbiana Dr				From S Columbiana Dr				From E Columbiana Cir-Lan				From W Columbiana Cir-Lan				Total	Total
	LT	STR	RT	TOT	LT	STR	RT	TOT	LT	STR	RT	TOT	LT	STR	RT	TOT	Vol	Peds
7:00 - 7:15	2	62	0	64	1	27	0	28	0	0	0	0	0	0	3	3	95	0
7:15 - 7:30	1	168	1	170	3	53	2	58	1	0	2	3	0	0	8	8	239	0
7:30 - 7:45	4	235	0	239	2	66	2	70	1	0	3	4	0	0	4	4	317	0
7:45 - 8:00	8	239	0	247	3	42	4	49	1	0	1	2	1	1	3	5	303	0
8:00 - 8:15	9	186	2	197	3	42	3	48	0	0	5	5	1	1	3	5	255	0
8:15 - 8:30	2	166	3	171	8	43	1	52	0	0	5	5	0	0	10	10	238	1
8:30 - 8:45	5	149	1	155	3	48	0	51	0	0	5	5	1	0	5	6	217	2
8:45 - 9:00	6	98	2	106	5	54	3	62	1	0	4	5	1	0	5	6	179	0
9:00 - 9:15	2	57	0	59	2	29	4	35	0	0	4	4	0	0	3	3	101	0
9:15 - 9:30	2	89	2	93	1	27	7	35	2	1	1	4	1	1	2	4	136	0
9:30 - 9:45	4	105	1	110	1	56	4	61	3	0	4	7	1	0	0	1	179	0
9:45 - 10:00	5	99	1	105	5	52	12	69	3	1	5	9	1	1	3	5	188	0
10:00 - 10:15	3	100	3	106	2	50	10	62	3	0	5	8	1	1	3	5	181	0
10:15 - 10:30	6	103	4	113	3	56	12	71	9	0	11	20	1	0	1	2	206	1
10:30 - 10:45	6	96	3	105	5	72	11	88	12	0	8	20	0	2	9	11	224	0
10:45 - 11:00	6	92	0	98	5	70	19	94	15	0	8	23	1	0	4	5	220	0
11:00 - 11:15	4	103	2	109	7	0	25	32	16	0	8	24	1	0	3	4	169	0
11:15 - 11:30	8	106	4	118	5	104	16	125	9	2	13	24	2	1	9	12	279	0
11:30 - 11:45	2	116	4	122	2	95	20	117	20	3	10	33	1	0	9	10	282	0
11:45 - 12:00	6	144	2	152	6	120	14	140	15	1	8	24	0	3	9	12	328	0
12:00 - 12:15	2	131	2	135	10	99	17	126	32	4	13	49	3	1	2	6	316	0
12:15 - 12:30	5	108	2	115	13	113	17	143	31	1	11	43	2	2	5	9	310	0
12:30 - 12:45	4	139	1	144	10	93	21	124	17	1	14	32	0	0	4	4	304	0
12:45 - 13:00	9	143	4	156	10	122	17	149	27	2	12	41	2	2	9	13	359	0
13:00 - 13:15	4	145	3	152	7	95	22	124	34	3	17	54	6	0	7	13	343	1
13:15 - 13:30	8	124	2	134	5	103	24	132	23	1	19	43	5	0	14	19	328	0
13:30 - 13:45	3	133	1	137	9	105	19	133	33	2	24	59	6	0	7	13	342	0
13:45 - 14:00	4	142	1	147	10	140	23	173	15	1	9	25	3	0	7	10	355	1
14:00 - 14:15	5	92	1	98	11	81	15	107	22	2	12	36	4	0	5	9	250	0
14:15 - 14:30	7	102	2	111	6	110	18	134	21	2	15	38	4	2	9	15	298	0
14:30 - 14:45	5	128	6	139	4	106	13	123	14	3	11	28	4	1	7	12	302	0
14:45 - 15:00	8	131	4	143	6	100	14	120	17	0	13	30	1	2	8	11	304	0
15:00 - 15:15	5	78	2	85	9	72	11	92	16	2	9	27	2	0	9	11	215	0
15:15 - 15:30	4	118	3	125	14	108	7	129	21	2	13	36	5	1	15	21	311	0
15:30 - 15:45	4	121	2	127	11	86	16	113	15	2	15	32	6	0	6	12	284	0
15:45 - 16:00	7	99	3	109	8	96	17	121	17	1	13	31	3	1	2	6	267	0
16:00 - 16:15	8	112	8	128	8	120	11	139	23	0	14	37	5	0	6	11	315	0
16:15 - 16:30	6	121	6	133	12	117	12	141	18	0	10	28	5	1	5	11	313	1
16:30 - 16:45	5	116	2	123	6	120	15	141	18	2	21	41	6	0	6	12	317	0
16:45 - 17:00	6	86	1	93	3	112	16	131	10	0	13	23	1	1	8	10	257	1
17:00 - 17:15	6	100	3	109	11	117	9	137	16	0	7	23	3	1	3	7	276	0
17:15 - 17:30	1	103	3	107	16	138	16	170	17	2	14	33	4	0	11	15	325	0
17:30 - 17:45	2	50	2	54	5	84	7	96	9	1	3	13	1	0	4	5	168	0
17:45 - 18:00	7	114	4	125	7	155	11	173	9	2	16	27	6	0	2	8	333	0
18:00 - 18:15	5	111	2	118	7	153	10	170	15	3	4	22	5	0	5	10	320	0
18:15 - 18:30	8	102	9	119	3	159	7	169	19	4	16	39	7	0	8	15	342	0
18:30 - 18:45	5	95	3	103	7	129	11	147	20	6	10	36	6	2	6	14	300	0
18:45 - 19:00	6	89	3	98	2	107	5	114	9	3	7	19	3	2	6	11	242	0
TOTAL	240	5646	120	6006	302	4246	570	5118	649	60	465	1174	122	30	282	434	12732	8
Trucks	0	18	1	19	1	13	4	18	1	0	3	4	0	0	2	2	43	0.3%
School Buses	0	21	0	21	1	11	1	13	1	0	0	1	0	0	0	0	35	0.3%

TOTAL AND PEAK HOUR VOLUME DIAGRAMS

Columbiana Dr AT Columbiana Cir-Lanneau Ct Date: 11/29/2016

12.0 HOUR TOTAL VOLUME
FROM 7:00 TO 15:00

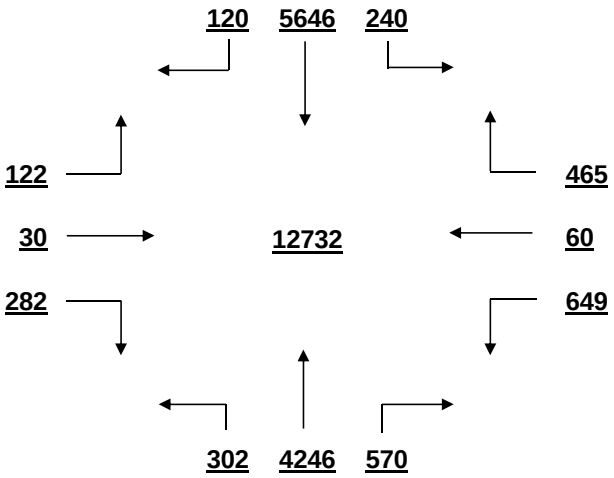

OVERALL PEAK HOUR VOLUME
FROM 12:45 TO 13:45

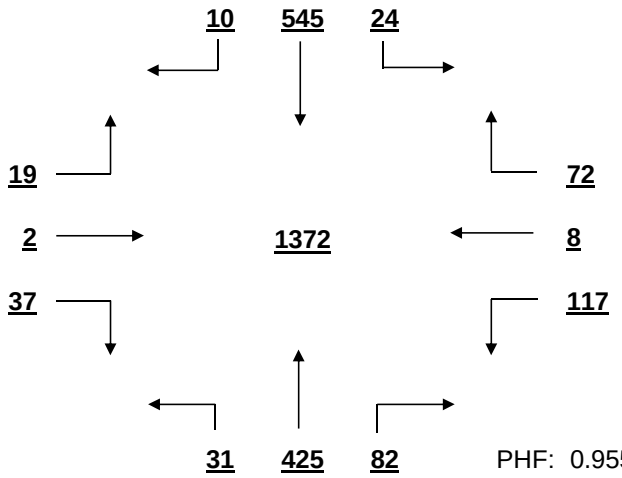

PHF: 0.955

AM PEAK HOUR VOLUME (0:00-10:45)
FROM 7:15 TO 8:15

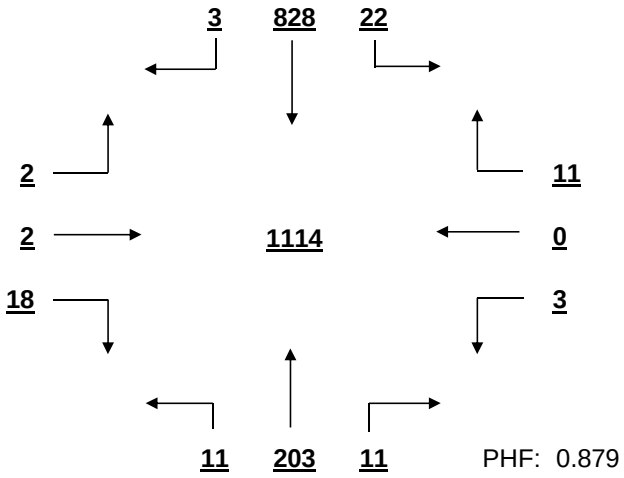

PHF: 0.879

PM PEAK HOUR VOLUME (14:15-23:45)
FROM 17:45 TO 18:45

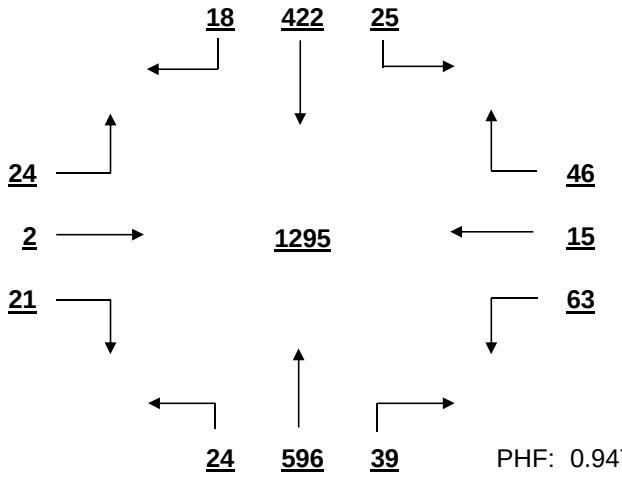

PHF: 0.947

MID-DAY PEAK HOUR VOLUME (11:00-14:00)
FROM 12:45 TO 13:45

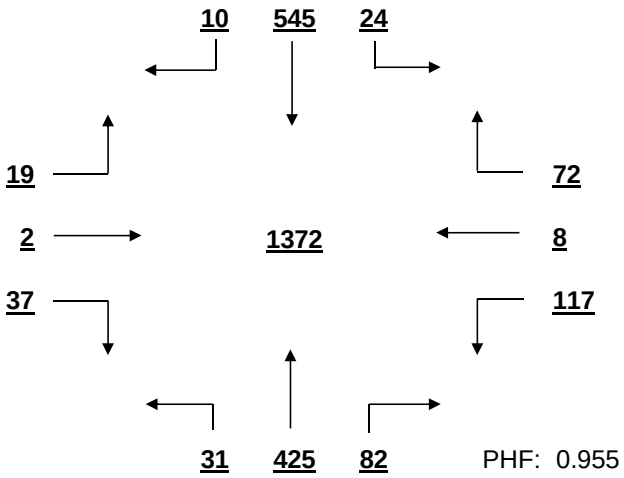

PHF: 0.955

OTHER HOUR VOLUME
FROM 7:00 TO 8:00

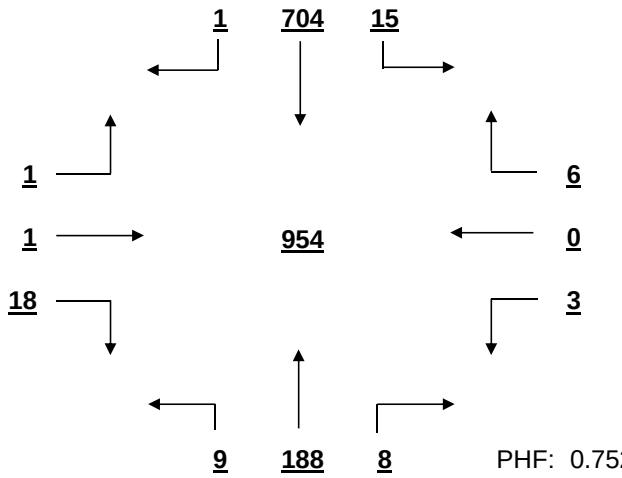

PHF: 0.752

SIGNAL WARRANT ANALYSIS

Columbiana Dr AT Columbiana Cir-Lanneau Ct Date: 11/29/2016

Minor Street Volume, percent of total = 12.6%
Percent of Left Turns from Minor Street = = 47.9%
Percent of Right Turns from Minor Street = 46.5%
Percent of Minor Street Right Turns to Remove from Warrant Analysis = 0%
WARRANT BASIS = **100%**

Warrant No. 1 - Vehicular Volume is met

Condition A - Minimum Vehicular Volume is not met

Average Major Street % of Warrant				Average Minor Street % of Warrant			
927.0	/ 600	=	155%	97.8	/ 150	=	65%

Hourly percent of warrant

	7:00 - 8:00	8:00 - 9:00	9:00 - 10:00	10:00 - 11:00	11:00 - 12:00	12:00 - 13:00	13:00 - 14:00	14:00 - 15:00	15:00 - 16:00	16:00 - 17:00	17:00 - 18:00	18:00 - 19:00
Major St.	154%	140%	95%	123%	153%	182%	189%	163%	150%	172%	162%	173%
Minor St.	13%	18%	16%	47%	70%	110%	121%	88%	84%	86%	64%	77%

Condition B - Interruption to Continuous Traffic is met

Average Major Street % of Warrant				Average Minor Street % of Warrant			
927.0	/ 900	=	103%	97.8	/ 75	=	130%

Hourly percent of warrant

	7:00 - 8:00	8:00 - 9:00	9:00 - 10:00	10:00 - 11:00	11:00 - 12:00	12:00 - 13:00	13:00 - 14:00	14:00 - 15:00	15:00 - 16:00	16:00 - 17:00	17:00 - 18:00	18:00 - 19:00
Major St.	103%	94%	63%	82%	102%	121%	126%	108%	100%	114%	108%	115%
Minor St.	27%	36%	32%	95%	140%	220%	241%	176%	168%	172%	128%	155%

80% Combination of Conditions A & B is not met

Warrant No. 2 - Four Hour Vehicular Volume is not met

Hourly percent of warrant

	7:00 - 8:00	8:00 - 9:00	9:00 - 10:00	10:00 - 11:00	11:00 - 12:00	12:00 - 13:00	13:00 - 14:00	14:00 - 15:00	15:00 - 16:00	16:00 - 17:00	17:00 - 18:00	18:00 - 19:00
Minor St.	12%	14%	8%	31%	63%	135%	158%	88%	74%	95%	64%	87%

Warrant No. 3 - Peak Hour is not met

Overall Peak Hour: 12:45 - 13:45 — Percent of warrant
Minor St. 81%

Higher Volume Side Street Peak Hour: 12:45 - 13:45 — Percent of warrant
Minor St. 81%

Warrant No. 4 - Pedestrian Volume. Pedestrian volume shown are minumum volumes assuming heavy major street traffic. If these volumes are met, warrant 4 requires further engineering analysis

S

Minimum 4 hour ped. volume crossing major street: 107

Minimum peak hour ped. volume crossing major street: 133

Number of pedestrians crossing major street

	7:00 - 8:00	8:00 - 9:00	9:00 - 10:00	10:00 - 11:00	11:00 - 12:00	12:00 - 13:00	13:00 - 14:00	14:00 - 15:00	15:00 - 16:00	16:00 - 17:00	17:00 - 18:00	18:00 - 19:00
Major t.	0	3	0	1	0	0	1	0	0	2	0	0

Warrant No. 7 - Crash Experience (Requires 3 criteria analysis by engineering)

Total Number: 0 From: 1/1/2005 to 1/1/2008
Accident Rate: 0.00 per million entering vehicles

Types of Accidents	No.	/	Avg.		No.	/	Avg.
Right Angle	0	/	0.0	Rear End	0	/	0.0
Lost Control	0	/	0.0	Side Swipe	0	/	0.0
Left Turn	0	/	0.0	Other	0	/	0.0

SOUTH CAROLINA DEPARTMENT OF TRANSPORTATION
DISTRICT 1
TRAFFIC ENGINEERING

County: Richland City: Columbia Date: 11/30/2016

Major Rt: Harbison Blvd * Not on State System Minor Rt: Parkridge Dr * Not on State System

Day of Week: Wednesday Weather: Rain Office: Short Counts JMS

Type of Control: Signal Speed Limit (major st) 40

Direction of Minor Street: N-S Intersection ADT - 13190 (Calc)

Number of Lanes (major st)* 2 Number of Lanes (minor st)* 1 * Each Direction

INTERSECTION VOLUME SUMMARY

	From N Parkridge Dr				From S Parkridge Dr				From E Harbison Blvd				From W Harbison Blvd				Total	Total
	LT	STR	RT	TOT	LT	STR	RT	TOT	LT	STR	RT	TOT	LT	STR	RT	TOT	Vol	Peds
7:00 - 7:15	3	0	22	25	0	0	0	0	0	92	3	95	11	27	0	38	158	0
7:15 - 7:30	4	0	58	62	0	0	0	0	0	94	6	100	26	48	0	74	236	1
7:30 - 7:45	4	0	124	128	0	0	0	0	0	105	4	109	12	39	0	51	288	0
7:45 - 8:00	3	0	155	158	0	0	0	0	0	91	9	100	25	55	0	80	338	2
8:00 - 8:15	10	0	130	140	0	0	0	0	0	79	5	84	28	45	0	73	297	0
8:15 - 8:30	4	0	124	128	0	0	0	0	0	81	4	85	25	49	0	74	287	2
8:30 - 8:45	4	0	101	105	0	0	0	0	0	96	8	104	17	51	0	68	277	0
8:45 - 9:00	6	0	77	83	0	0	0	0	0	103	3	106	20	47	0	67	256	0
9:00 - 9:15	4	0	43	47	0	0	0	0	0	67	3	70	11	35	0	46	163	1
9:15 - 9:30	2	0	21	23	0	0	0	0	0	53	1	54	21	37	0	58	135	0
9:30 - 9:45	2	0	23	25	0	0	0	0	0	92	4	96	32	46	0	78	199	0
9:45 - 10:00	2	0	25	27	0	0	0	0	0	74	1	75	12	50	0	62	164	0
10:00 - 10:15	7	0	40	47	0	0	0	0	0	75	2	77	30	63	0	93	217	0
10:15 - 10:30	5	0	28	33	0	0	0	0	0	95	5	100	24	55	0	79	212	2
10:30 - 10:45	3	0	29	32	0	0	0	0	0	76	2	78	29	59	0	88	198	0
10:45 - 11:00	3	0	33	36	0	0	0	0	0	81	4	85	28	63	0	91	212	0
11:00 - 11:15	2	0	18	20	0	0	0	0	0	79	2	81	22	53	0	75	176	1
11:15 - 11:30	2	0	25	27	0	0	0	0	0	88	2	90	25	61	0	86	203	0
11:30 - 11:45	4	0	35	39	0	0	0	0	0	93	1	94	32	65	0	97	230	0
11:45 - 12:00	4	0	55	59	0	0	0	0	0	96	3	99	48	82	0	130	288	0
12:00 - 12:15	6	0	66	72	0	0	0	0	0	100	1	101	26	69	0	95	268	0
12:15 - 12:30	5	0	43	48	0	0	0	0	0	90	6	96	34	91	0	125	269	0
12:30 - 12:45	9	0	34	43	0	0	0	0	0	73	4	77	40	88	0	128	248	2
12:45 - 13:00	9	0	48	57	0	0	0	0	0	98	4	102	39	90	0	129	288	0
13:00 - 13:15	6	0	45	51	0	0	0	0	0	108	7	115	32	95	0	127	293	2
13:15 - 13:30	5	0	38	43	0	0	0	0	0	80	6	86	28	86	0	114	243	0
13:30 - 13:45	5	0	18	23	0	0	0	0	0	78	4	82	23	76	0	99	204	0
13:45 - 14:00	4	0	35	39	0	0	0	0	0	85	5	90	32	79	0	111	240	0
14:00 - 14:15	4	0	36	40	0	0	0	0	0	83	5	88	30	102	0	132	260	0
14:15 - 14:30	3	0	34	37	0	0	0	0	0	54	3	57	36	77	0	113	207	0
14:30 - 14:45	5	0	31	36	0	0	0	0	0	85	4	89	32	83	0	115	240	0
14:45 - 15:00	6	0	34	40	0	0	0	0	0	99	5	104	32	73	0	105	249	0
15:00 - 15:15	6	0	42	48	0	0	0	0	0	84	4	88	35	90	0	125	261	0
15:15 - 15:30	10	0	37	47	0	0	0	0	0	84	3	87	40	70	0	110	244	0
15:30 - 15:45	3	0	36	39	0	0	0	0	0	92	7	99	33	79	0	112	250	0
15:45 - 16:00	7	0	30	37	0	0	0	0	0	101	3	104	41	83	0	124	265	0
16:00 - 16:15	7	0	31	38	0	0	0	0	0	100	7	107	53	98	0	151	296	0
16:15 - 16:30	3	0	37	40	0	0	0	0	0	112	5	117	42	93	0	135	292	1
16:30 - 16:45	9	0	51	60	0	0	0	0	0	121	3	124	58	86	0	144	328	0
16:45 - 17:00	6	0	40	46	0	0	0	0	0	119	6	125	64	91	0	155	326	1
17:00 - 17:15	3	0	42	45	0	0	0	0	0	128	6	134	58	95	0	153	332	1
17:15 - 17:30	2	0	36	38	0	0	0	0	0	114	11	125	60	79	0	139	302	0
17:30 - 17:45	6	0	49	55	0	0	0	0	0	111	7	118	52	117	0	169	342	1
17:45 - 18:00	4	0	33	37	0	0	0	0	0	117	8	125	74	107	0	181	343	0
18:00 - 18:15	7	0	49	56	0	0	0	0	0	90	10	100	37	91	0	128	284	0
18:15 - 18:30	2	0	40	42	0	0	0	0	0	94	7	101	48	107	0	155	298	0
18:30 - 18:45	9	0	34	43	0	0	0	0	0	76	5	81	46	103	0	149	273	0
18:45 - 19:00	1	0	33	34	0	0	0	0	0	75	9	84	46	97	0	143	261	0
TOTAL	230	0	2248	2478	0	0	0	0	0	4361	227	4588	1649	3525	0	5174	12240	17
Trucks	0	0	5	5	0	0	0	0	0	6	0	6	5	12	0	17	28	0.2%
School Buses	1	0	2	3	0	0	0	0	0	27	1	28	0	35	0	35	66	0.5%

TOTAL AND PEAK HOUR VOLUME DIAGRAMS

Harbison Blvd AT Parkridge Dr Date: 11/30/2016

12.0 HOUR TOTAL VOLUME
FROM 7:00 TO 15:00

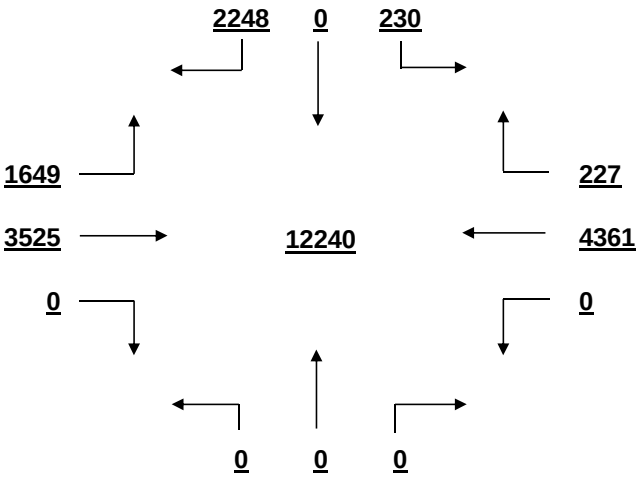

OVERALL PEAK HOUR VOLUME
FROM 17:00 TO 18:00

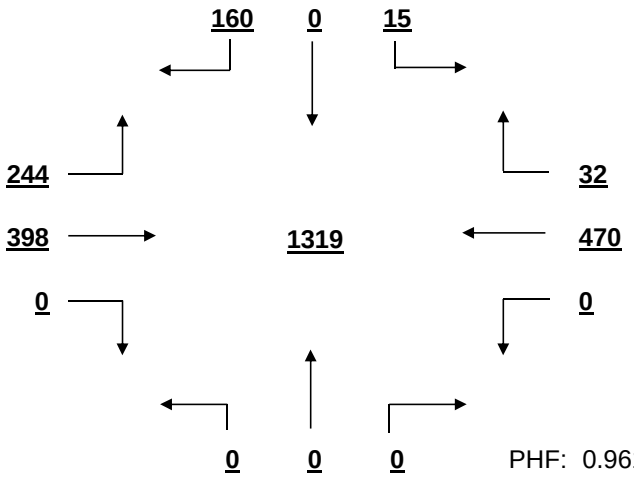

PHF: 0.961

AM PEAK HOUR VOLUME (0:00-10:45)
FROM 7:30 TO 8:30

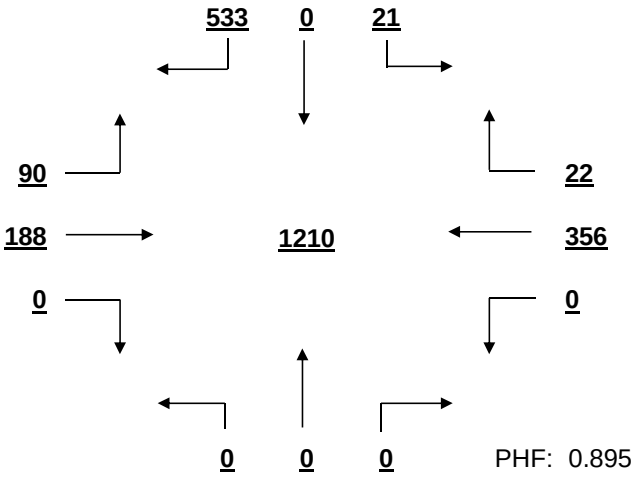

PHF: 0.895

PM PEAK HOUR VOLUME (14:15-23:45)
FROM 17:00 TO 18:00

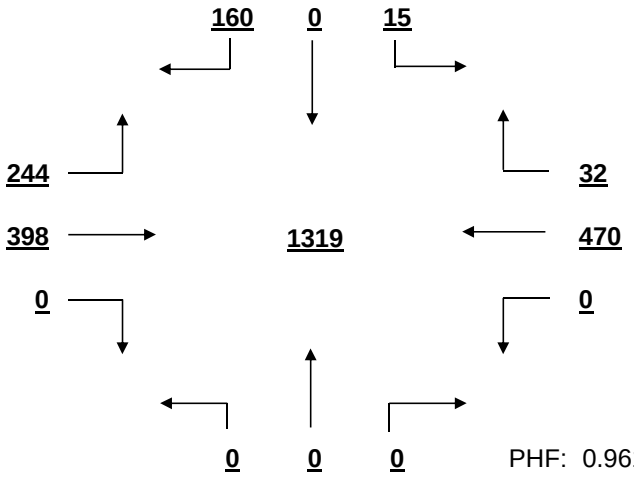

PHF: 0.961

MID-DAY PEAK HOUR VOLUME (11:00-14:00)
FROM 12:15 TO 13:15

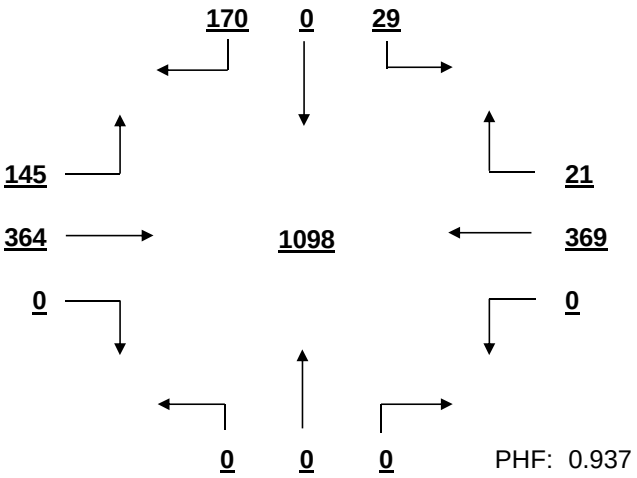

PHF: 0.937

OTHER HOUR VOLUME
FROM 7:00 TO 8:00

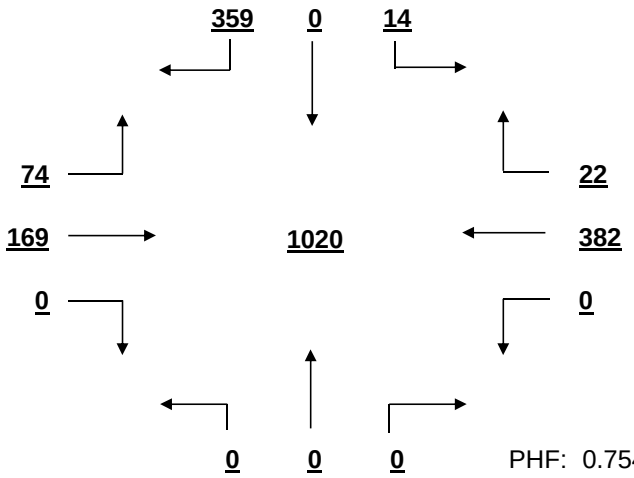

PHF: 0.754

SIGNAL WARRANT ANALYSIS

Harbison Blvd AT Parkridge Dr Date: 11/30/2016

Minor Street Volume, percent of total = 20.2%
Percent of Left Turns from Minor Street = 9.3%
Percent of Right Turns from Minor Street = 90.7%
Percent of Minor Street Right Turns to Remove from Warrant Analysis = 0%
WARRANT BASIS = **100%**

Warrant No. 1 - Vehicular Volume is met

Condition A - Minimum Vehicular Volume is met

Average Major Street % of Warrant	Average Minor Street % of Warrant
813.5 / 600 = 136%	206.5 / 150 = 138%

Hourly percent of warrant

	7:00-8:00	8:00-9:00	9:00-10:00	10:00-11:00	11:00-12:00	12:00-13:00	13:00-14:00	14:00-15:00	15:00-16:00	16:00-17:00	17:00-18:00	18:00-19:00
Major St.	108%	110%	90%	115%	125%	142%	137%	134%	142%	176%	191%	157%
Minor St.	249%	304%	81%	99%	97%	147%	104%	102%	114%	123%	117%	117%

Condition B - Interruption to Continuous Traffic is not met

Average Major Street % of Warrant	Average Minor Street % of Warrant
813.5 / 900 = 90%	206.5 / 75 = 275%

Hourly percent of warrant

	7:00-8:00	8:00-9:00	9:00-10:00	10:00-11:00	11:00-12:00	12:00-13:00	13:00-14:00	14:00-15:00	15:00-16:00	16:00-17:00	17:00-18:00	18:00-19:00
Major St.	72%	73%	60%	77%	84%	95%	92%	89%	94%	118%	127%	105%
Minor St.	497%	608%	163%	197%	193%	293%	208%	204%	228%	245%	233%	233%

80% Combination of Conditions A & B is met

Warrant No. 2 - Four Hour Vehicular Volume is met

Hourly percent of warrant

	7:00-8:00	8:00-9:00	9:00-10:00	10:00-11:00	11:00-12:00	12:00-13:00	13:00-14:00	14:00-15:00	15:00-16:00	16:00-17:00	17:00-18:00	18:00-19:00
Minor St.	141%	176%	39%	60%	65%	118%	80%	75%	91%	142%	155%	110%

Warrant No. 3 - Peak Hour is met

Percent of warrant		Percent of warrant	
Overall Peak Hour: 17:00-18:00		Higher Volume Side Street Peak Hour: 7:30-8:30	
Minor St.	75%	Minor St.	127%

Warrant No. 4 - Pedestrian Volume. Pedestrian volume shown are minumum volumes assuming heavy major street traffic. If these volumes are met, warrant 4 requires further engineering analysis

S

Minimum 4 hour ped. volume crossing major street	Minimum peak hour ped. volume crossing major street
107	133

Number of pedestrians crossing major street

	7:00-8:00	8:00-9:00	9:00-10:00	10:00-11:00	11:00-12:00	12:00-13:00	13:00-14:00	14:00-15:00	15:00-16:00	16:00-17:00	17:00-18:00	18:00-19:00
Major t.	1	1	0	2	1	2	2	0	0	1	2	0

Warrant No. 7 - Crash Experience (Requires 3 criteria analysis by engineering)

Total Number: 0 From: 1/1/2005 to 1/1/2008
Accident Rate: 0.00 per million entering vehicles

Types of Accidents	No.	/	Avg.		No.	/	Avg.
Right Angle	0	/	0.0	Rear End	0	/	0.0
Lost Control	0	/	0.0	Side Swipe	0	/	0.0
Left Turn	0	/	0.0	Other	0	/	0.0

SOUTH CAROLINA DEPARTMENT OF TRANSPORTATION
DISTRICT 1
TRAFFIC ENGINEERING

County: Richland City: Columbia Date: 12/1/2016

Major Rt: Woodcross Dr * Not on State System Minor Rt: Fernandina Rd-Wendy's/Hotel * Not on State System

Day of Week: Thursday Weather: Clear Office: Short Counts JMS

Type of Control: Stop Sign Speed Limit (major st) 35

Direction of Minor Street: E-W Intersection ADT - 8900 (Calc)

Number of Lanes (major st)* 1 Number of Lanes (minor st)* 1 * Each Direction

INTERSECTION VOLUME SUMMARY

	From N Woodcross Dr				From S Woodcross Dr				From E Fernandina Rd-Wend				From W Fernandina Rd-Wend				Total	Total
	LT	STR	RT	TOT	LT	STR	RT	TOT	LT	STR	RT	TOT	LT	STR	RT	TOT	Vol	Peds
7:00 - 7:15	0	0	12	12	1	0	0	1	0	31	0	31	2	10	19	31	75	0
7:15 - 7:30	0	0	7	7	2	0	0	2	2	35	1	38	1	17	48	66	113	0
7:30 - 7:45	0	0	7	7	3	0	0	3	4	35	0	39	1	30	95	126	175	0
7:45 - 8:00	1	1	6	8	8	1	1	10	0	22	0	22	1	34	94	129	169	0
8:00 - 8:15	0	2	11	13	4	0	0	4	0	34	1	35	1	34	108	143	195	0
8:15 - 8:30	0	0	3	3	8	0	0	8	0	22	0	22	3	32	82	117	150	0
8:30 - 8:45	0	0	3	3	15	0	0	15	0	32	0	32	1	37	48	86	136	1
8:45 - 9:00	0	0	2	2	12	0	0	12	1	36	0	37	4	31	33	68	119	0
9:00 - 9:15	0	1	5	6	14	0	0	14	1	39	4	44	2	32	11	45	109	0
9:15 - 9:30	4	1	3	8	17	0	0	17	1	42	0	43	3	44	17	64	132	0
9:30 - 9:45	0	0	2	2	8	1	0	9	0	32	0	32	1	38	18	57	100	0
9:45 - 10:00	0	0	3	3	15	1	1	17	1	46	0	47	2	31	16	49	116	0
10:00 - 10:15	2	0	3	5	11	0	0	11	2	35	0	37	2	31	15	48	101	0
10:15 - 10:30	0	0	4	4	16	0	0	16	0	45	0	45	3	29	9	41	106	0
10:30 - 10:45	0	0	1	1	11	2	0	13	0	35	0	35	1	38	11	50	99	0
10:45 - 11:00	1	0	2	3	19	1	0	20	1	48	1	50	4	43	25	72	145	0
11:00 - 11:15	2	0	5	7	16	0	0	16	0	29	2	31	8	52	19	79	133	0
11:15 - 11:30	1	1	9	11	22	1	1	24	0	48	2	50	8	48	12	68	153	0
11:30 - 11:45	2	1	9	12	18	1	1	20	0	56	7	63	8	36	19	63	158	0
11:45 - 12:00	3	0	12	15	22	1	1	24	0	50	4	54	6	63	22	91	184	0
12:00 - 12:15	2	3	9	14	26	5	0	31	0	55	7	62	8	48	32	88	195	0
12:15 - 12:30	4	2	21	27	30	2	1	33	0	37	2	39	24	52	30	106	205	2
12:30 - 12:45	5	5	18	28	32	3	0	35	0	44	8	52	16	45	27	88	203	1
12:45 - 13:00	8	3	13	24	39	4	0	43	1	37	4	42	13	42	23	78	187	0
13:00 - 13:15	6	4	16	26	27	2	0	29	0	51	13	64	16	52	28	96	215	0
13:15 - 13:30	3	2	17	22	24	5	2	31	0	48	6	54	4	53	31	88	195	0
13:30 - 13:45	1	2	16	19	29	5	1	35	0	40	3	43	8	37	20	65	162	0
13:45 - 14:00	2	6	6	14	18	3	0	21	3	46	3	52	8	37	10	55	142	0
14:00 - 14:15	2	4	12	18	30	1	1	32	1	47	3	51	6	46	11	63	164	0
14:15 - 14:30	3	2	9	14	24	4	2	30	2	43	4	49	9	51	27	87	180	0
14:30 - 14:45	1	0	9	10	17	2	1	20	1	35	3	39	6	29	10	45	114	0
14:45 - 15:00	2	0	6	8	15	1	1	17	1	30	4	35	1	36	11	48	108	0
15:00 - 15:15	3	0	8	11	32	1	1	34	2	51	5	58	11	53	14	78	181	0
15:15 - 15:30	5	0	14	19	24	0	0	24	0	42	3	45	11	44	23	78	166	0
15:30 - 15:45	0	0	10	10	30	4	0	34	0	52	1	53	7	34	20	61	158	0
15:45 - 16:00	1	1	12	14	24	0	1	25	0	39	1	40	17	53	21	91	170	0
16:00 - 16:15	3	1	15	19	35	2	1	38	1	36	5	42	12	47	19	78	177	0
16:15 - 16:30	3	2	18	23	28	3	5	36	3	38	2	43	13	49	22	84	186	0
16:30 - 16:45	5	1	5	11	33	3	1	37	2	71	2	75	13	45	20	78	201	1
16:45 - 17:00	4	0	12	16	48	1	1	50	1	40	5	46	15	52	18	85	197	3
17:00 - 17:15	3	0	14	17	56	3	1	60	3	62	0	65	9	48	26	83	225	3
17:15 - 17:30	2	0	12	14	68	6	3	77	1	57	7	65	13	42	27	82	238	1
17:30 - 17:45	5	3	13	21	63	2	3	68	1	60	2	63	8	41	24	73	225	0
17:45 - 18:00	3	0	13	16	54	0	1	55	4	44	4	52	13	51	15	79	202	0
18:00 - 18:15	1	0	14	15	42	1	0	43	1	47	1	49	7	45	17	69	176	0
18:15 - 18:30	2	1	13	16	42	2	0	44	0	35	2	37	12	37	15	64	161	2
18:30 - 18:45	4	1	13	18	39	5	1	45	2	31	2	35	11	46	16	73	171	3
18:45 - 19:00	4	0	14	18	27	4	0	31	0	43	0	43	8	36	12	56	148	0
TOTAL	103	50	461	614	1198	83	33	1314	43	2013	124	2180	361	1961	1290	3612	7720	17
Trucks	1	0	2	3	6	0	0	6	0	5	0	5	2	5	8	15	29	0.4%
School Buses	0	0	0	0	0	0	0	0	0	5	0	5	0	5	3	8	13	0.2%

TOTAL AND PEAK HOUR VOLUME DIAGRAMS

Woodcross Dr AT Fernandina Rd-Wendy's/Hotel Date: 12/1/2016

12.0 HOUR TOTAL VOLUME
FROM 7:00 TO 15:00

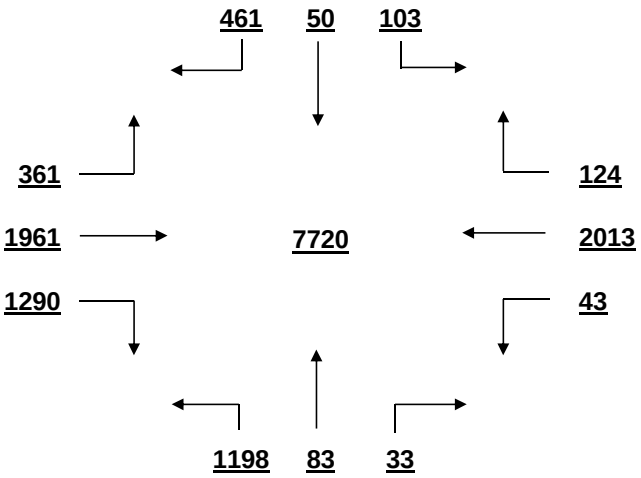

OVERALL PEAK HOUR VOLUME
FROM 17:00 TO 18:00

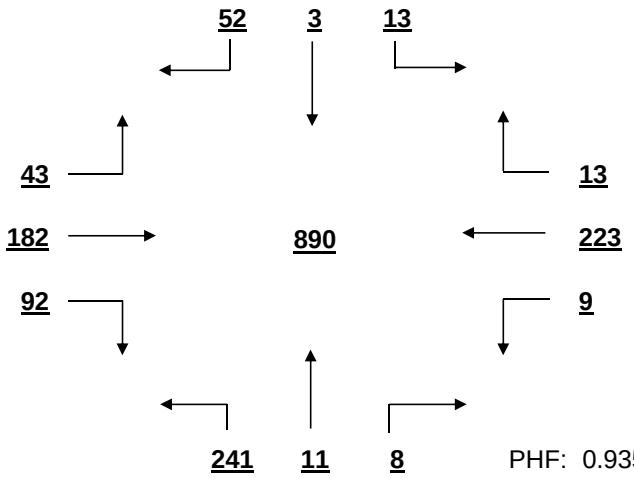

PHF: 0.935

AM PEAK HOUR VOLUME (0:00-10:45)
FROM 7:30 TO 8:30

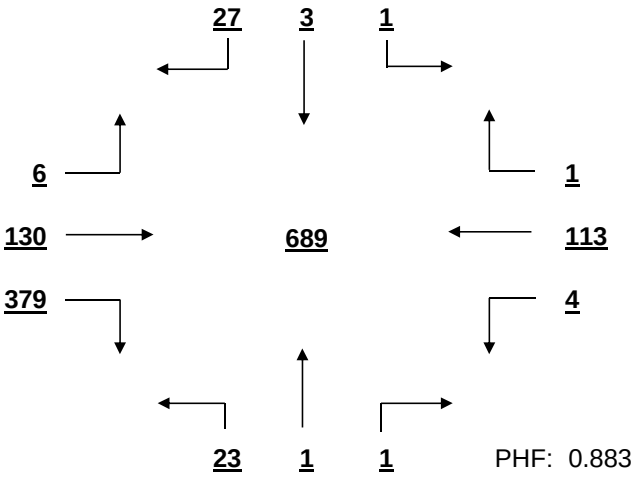

PHF: 0.883

PM PEAK HOUR VOLUME (14:15-23:45)
FROM 17:00 TO 18:00

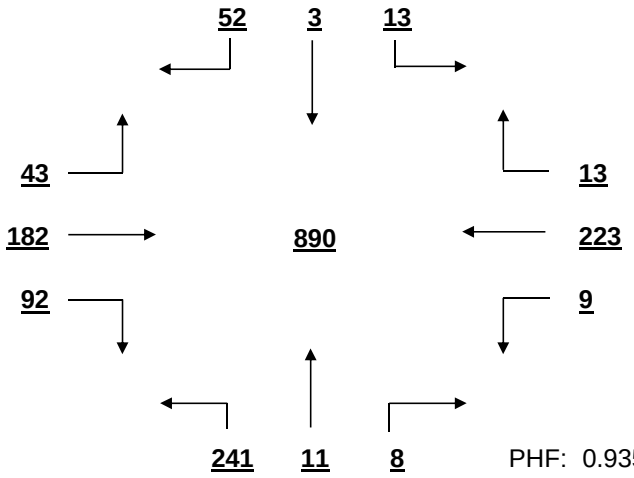

PHF: 0.935

MID-DAY PEAK HOUR VOLUME (11:00-14:00)
FROM 12:15 TO 13:15

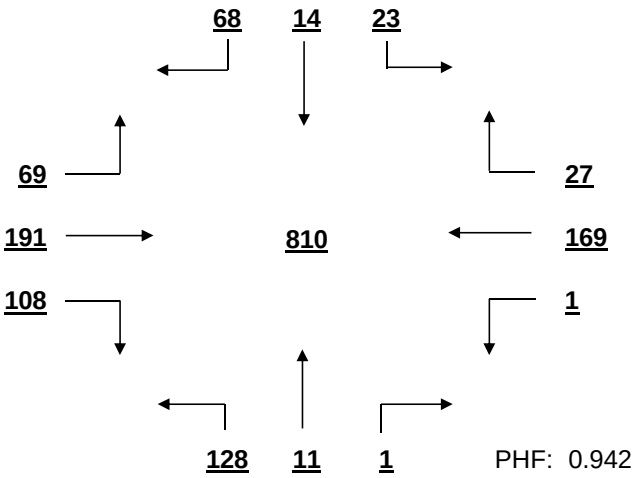

PHF: 0.942

OTHER HOUR VOLUME
FROM 7:00 TO 8:00

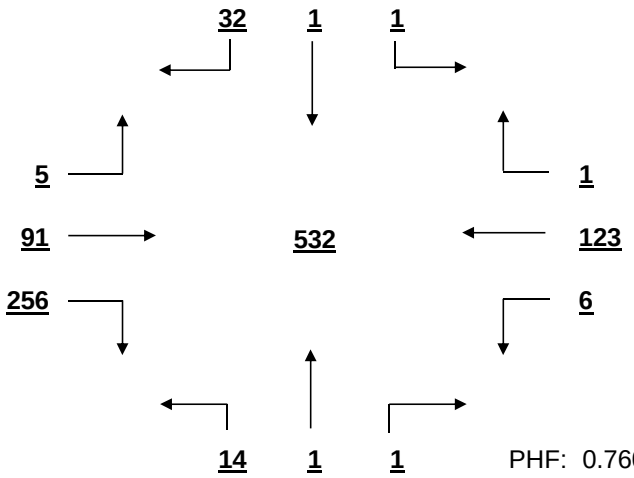

PHF: 0.760

SIGNAL WARRANT ANALYSIS

Woodcross Dr AT Fernandina Rd-Wendy's/Hotel Date: 12/1/2016

Minor Street Volume, percent of total = 75.0%
Percent of Left Turns from Minor Street = 7.0%
Percent of Right Turns from Minor Street = 24.4%
Percent of Minor Street Right Turns to Remove from Warrant Analysis = 0%
WARRANT BASIS = **100%**

Warrant No. 1 - Vehicular Volume is not met

Condition A - Minimum Vehicular Volume is not met

Average Major Street			% of Warrant	Average Minor Street			% of Warrant
160.7	/ 500	=	32%	301.0	/ 150	=	201%

Hourly percent of warrant

	7:00-8:00	8:00-9:00	9:00-10:00	10:00-11:00	11:00-12:00	12:00-13:00	13:00-14:00	14:00-15:00	15:00-16:00	16:00-17:00	17:00-18:00	18:00-19:00
Major St.	10%	12%	15%	15%	26%	47%	39%	30%	34%	46%	66%	46%
Minor St.	235%	276%	143%	141%	201%	240%	203%	162%	205%	217%	211%	175%

Condition B - Interruption to Continuous Traffic is not met

Average Major Street			% of Warrant	Average Minor Street			% of Warrant
160.7	/ 750	=	21%	301.0	/ 75	=	401%

Hourly percent of warrant

	7:00-8:00	8:00-9:00	9:00-10:00	10:00-11:00	11:00-12:00	12:00-13:00	13:00-14:00	14:00-15:00	15:00-16:00	16:00-17:00	17:00-18:00	18:00-19:00
Major St.	7%	8%	10%	10%	17%	31%	26%	20%	23%	31%	44%	31%
Minor St.	469%	552%	287%	281%	401%	480%	405%	324%	411%	433%	423%	349%

80% Combination of Conditions A & B is not met

Warrant No. 2 - Four Hour Vehicular Volume is not met

Hourly percent of warrant

	7:00-8:00	8:00-9:00	9:00-10:00	10:00-11:00	11:00-12:00	12:00-13:00	13:00-14:00	14:00-15:00	15:00-16:00	16:00-17:00	17:00-18:00	18:00-19:00
Minor St.	69%	82%	44%	43%	66%	91%	73%	54%	71%	82%	92%	66%

Warrant No. 3 - Peak Hour is not met

Overall Peak Hour: 17:00-18:00 — Percent of warrant — Minor St. 60%

Higher Volume Side Street Peak Hour: 7:30-8:30 — Percent of warrant — Minor St. 71%

Warrant No. 4 - Pedestrian Volume. Pedestrian volume shown are minumum volumes assuming heavy major street traffic. If these volumes are met, warrant 4 requires further engineering analysis

S

Minimum 4 hour ped. volume crossing major street: 107

Minimum peak hour ped. volume crossing major street: 133

Number of pedestrians crossing major street

	7:00-8:00	8:00-9:00	9:00-10:00	10:00-11:00	11:00-12:00	12:00-13:00	13:00-14:00	14:00-15:00	15:00-16:00	16:00-17:00	17:00-18:00	18:00-19:00
Major t.	0	0	0	0	0	0	0	0	0	0	0	0

Warrant No. 7 - Crash Experience (Requires 3 criteria analysis by engineering)

Total Number: 0 From: 1/1/2005 to 1/1/2008

Accident Rate: 0.00 per million entering vehicles

Types of Accidents	No.	/	Avg.		No.	/	Avg.
Right Angle	0	/	0.0	Rear End	0	/	0.0
Lost Control	0	/	0.0	Side Swipe	0	/	0.0
Left Turn	0	/	0.0	Other	0	/	0.0

SOUTH CAROLINA DEPARTMENT OF TRANSPORTATION
DISTRICT 1
TRAFFIC ENGINEERING

County: Richland City: Columbia Date: 12/2/2016

Major Rt: Harbison Blvd * Not on State System Minor Rt: Saturn Pkwy * Not on State System

Day of Week: Friday Weather: Clear Office: Short Counts JMS

Type of Control: Signal Speed Limit (major st) 35

Direction of Minor Street: E-W Intersection ADT - 31850 (Calc)

Number of Lanes (major st)* 2 Number of Lanes (minor st)* 1

* Each Direction

INTERSECTION VOLUME SUMMARY

	From N Harbison Blvd				From S Harbison Blvd				From E Saturn Pkwy				From W Saturn Pkwy				Total	Total
	LT	STR	RT	TOT	LT	STR	RT	TOT	LT	STR	RT	TOT	LT	STR	RT	TOT	Vol	Peds
7:00 - 7:15	23	137	0	160	0	126	3	129	0	0	9	9	0	0	0	0	298	0
7:15 - 7:30	14	163	0	177	0	158	5	163	0	0	16	16	0	0	0	0	356	0
7:30 - 7:45	21	204	0	225	0	188	6	194	0	0	13	13	0	0	0	0	432	3
7:45 - 8:00	26	217	0	243	0	180	5	185	0	0	12	12	0	0	0	0	440	0
8:00 - 8:15	37	181	0	218	0	189	5	194	0	0	12	12	0	0	0	0	424	0
8:15 - 8:30	30	188	0	218	0	159	5	164	0	0	19	19	0	0	0	0	401	0
8:30 - 8:45	27	187	0	214	0	156	3	159	0	0	23	23	0	0	0	0	396	0
8:45 - 9:00	23	232	0	255	0	142	7	149	0	0	24	24	0	0	0	0	428	1
9:00 - 9:15	31	211	0	242	0	144	12	156	0	0	14	14	0	0	0	0	412	0
9:15 - 9:30	39	280	0	319	0	180	9	189	0	0	25	25	0	0	0	0	533	0
9:30 - 9:45	39	282	0	321	0	163	17	180	0	0	34	34	0	0	0	0	535	0
9:45 - 10:00	49	340	0	389	0	180	9	189	0	0	18	18	0	0	0	0	596	0
10:00 - 10:15	56	295	0	351	0	159	14	173	0	0	49	49	0	0	0	0	573	1
10:15 - 10:30	56	307	0	363	0	198	19	217	0	0	43	43	0	0	0	0	623	0
10:30 - 10:45	46	308	0	354	0	267	21	288	0	0	42	42	0	0	0	0	684	0
10:45 - 11:00	48	358	0	406	0	227	16	243	0	0	52	52	0	0	0	0	701	1
11:00 - 11:15	53	329	0	382	0	0	30	30	0	0	46	46	0	0	0	0	458	0
11:15 - 11:30	52	344	0	396	0	255	17	272	0	0	58	58	0	0	0	0	726	0
11:30 - 11:45	59	363	0	422	0	298	13	311	0	0	45	45	0	0	0	0	778	0
11:45 - 12:00	51	382	0	433	0	289	17	306	0	0	51	51	0	0	0	0	790	0
12:00 - 12:15	64	371	0	435	0	296	24	320	0	0	52	52	0	0	0	0	807	0
12:15 - 12:30	62	298	0	360	0	236	9	245	0	0	47	47	0	0	0	0	652	0
12:30 - 12:45	22	301	0	323	0	325	7	332	0	0	31	31	0	0	0	0	686	0
12:45 - 13:00	34	359	0	393	0	327	15	342	0	0	36	36	0	0	0	0	771	0
13:00 - 13:15	31	329	0	360	0	324	12	336	0	0	42	42	0	0	0	0	738	0
13:15 - 13:30	40	312	0	352	0	308	10	318	0	0	31	31	0	0	0	0	701	0
13:30 - 13:45	41	310	0	351	0	289	11	300	0	0	44	44	0	0	0	0	695	0
13:45 - 14:00	52	292	0	344	0	321	15	336	0	0	46	46	0	0	0	0	726	0
14:00 - 14:15	54	311	0	365	0	316	23	339	0	0	50	50	0	0	0	0	754	1
14:15 - 14:30	50	315	0	365	0	416	20	436	0	0	59	59	0	0	0	0	860	0
14:30 - 14:45	57	274	0	331	0	372	21	393	0	0	72	72	0	0	0	0	796	0
14:45 - 15:00	47	294	0	341	0	333	24	357	0	0	49	49	0	0	0	0	747	0
15:00 - 15:15	72	261	0	333	0	364	15	379	0	0	70	70	0	0	0	0	782	0
15:15 - 15:30	60	214	0	274	0	348	23	371	0	0	70	70	0	0	0	0	715	0
15:30 - 15:45	49	288	0	337	0	362	22	384	0	0	61	61	0	0	0	0	782	1
15:45 - 16:00	55	306	0	361	0	358	20	378	0	0	62	62	0	0	0	0	801	0
16:00 - 16:15	63	271	0	334	0	324	9	333	0	0	61	61	0	0	0	0	728	0
16:15 - 16:30	60	244	0	304	0	346	12	358	0	0	75	75	0	0	0	0	737	0
16:30 - 16:45	54	314	0	368	0	353	10	363	0	0	66	66	0	0	0	0	797	0
16:45 - 17:00	67	279	0	346	0	325	15	340	0	0	77	77	0	0	0	0	763	1
17:00 - 17:15	53	299	0	352	0	267	12	279	0	0	59	59	0	0	0	0	690	0
17:15 - 17:30	54	282	0	336	0	341	10	351	0	0	49	49	0	0	0	0	736	1
17:30 - 17:45	50	293	0	343	0	296	9	305	0	0	46	46	0	0	0	0	694	0
17:45 - 18:00	84	253	0	337	0	289	6	295	0	0	72	72	0	0	0	0	704	0
18:00 - 18:15	56	250	0	306	0	307	15	322	0	0	53	53	0	0	0	0	681	4
18:15 - 18:30	58	248	0	306	0	298	16	314	0	0	52	52	0	0	0	0	672	0
18:30 - 18:45	71	251	0	322	0	278	13	291	0	0	61	61	0	0	0	0	674	0
18:45 - 19:00	27	264	0	291	0	261	10	271	0	0	55	55	0	0	0	0	617	0
TOTAL	2267	13391	0	15658	0	12638	641	13279	0	0	2153	2153	0	0	0	0	31090	14
Trucks	19	39	0	58	0	41	2	43	0	0	15	15	0	0	0	0	116	0.4%
School Buses	4	35	0	39	0	35	0	35	0	0	4	4	0	0	0	0	78	0.3%

TOTAL AND PEAK HOUR VOLUME DIAGRAMS

Harbison Blvd AT Saturn Pkwy Date: 12/2/2016

12.0 HOUR TOTAL VOLUME
FROM 7:00 TO 15:00

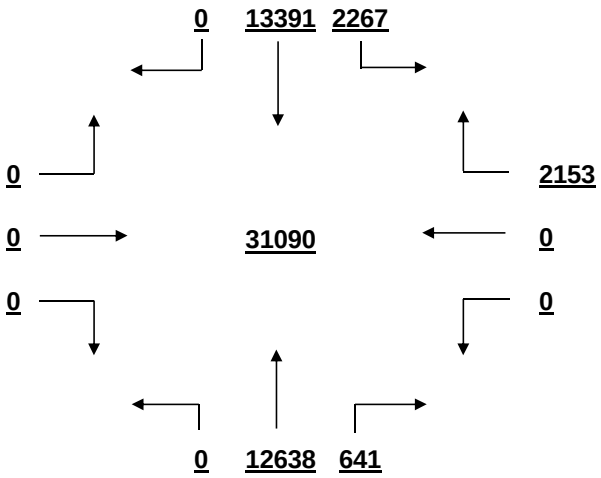

OVERALL PEAK HOUR VOLUME
FROM 14:15 TO 15:15

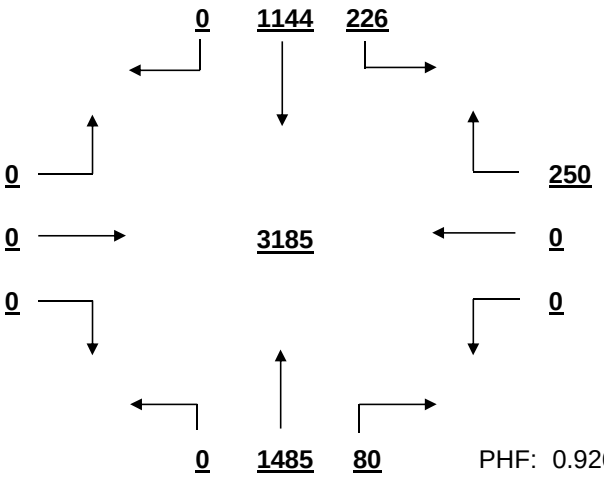

PHF: 0.926

AM PEAK HOUR VOLUME (0:00-10:45)
FROM 9:45 TO 10:45

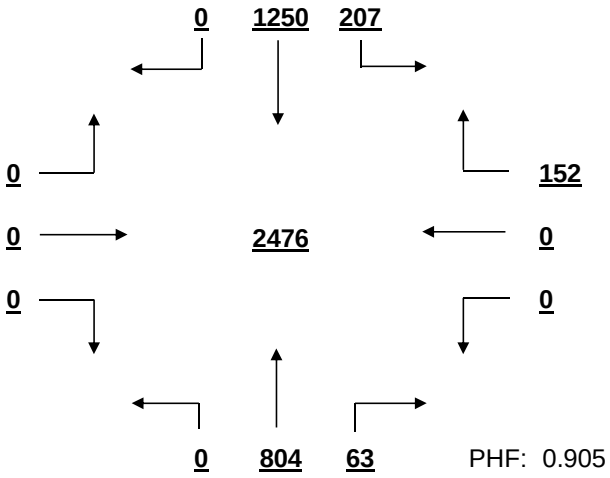

PHF: 0.905

PM PEAK HOUR VOLUME (14:15-23:45)
FROM 14:15 TO 15:15

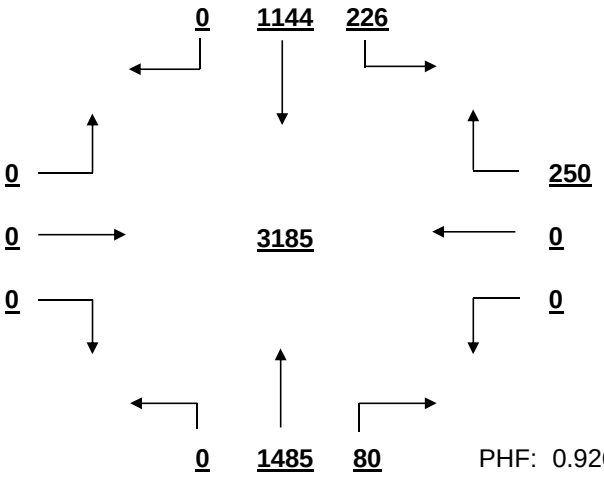

PHF: 0.926

MID-DAY PEAK HOUR VOLUME (11:00-14:00)
FROM 11:15 TO 12:15

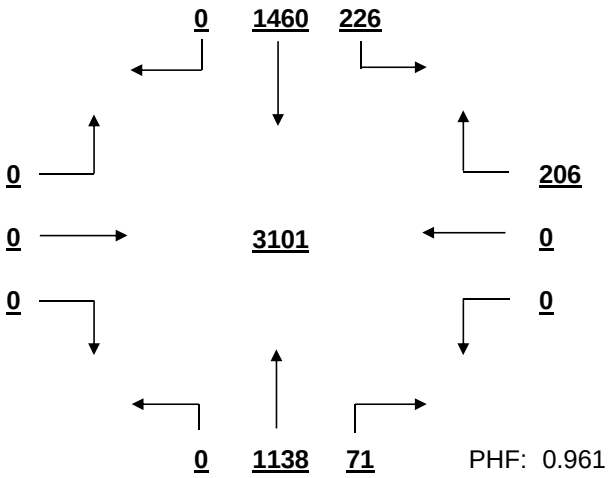

PHF: 0.961

OTHER HOUR VOLUME
FROM 7:00 TO 8:00

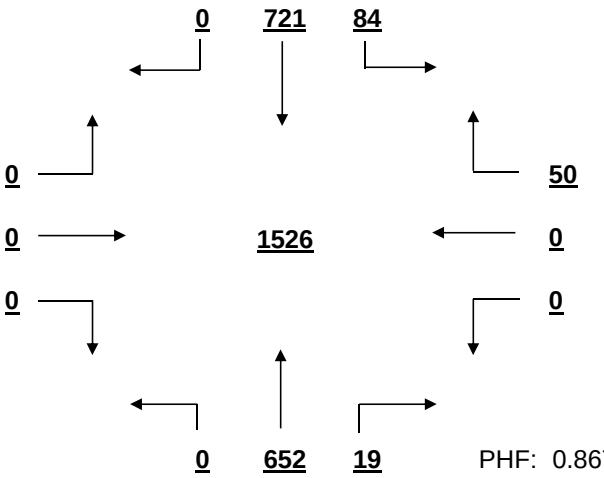

PHF: 0.867

SIGNAL WARRANT ANALYSIS

Harbison Blvd AT Saturn Pkwy Date: 12/2/2016

Minor Street Volume, percent of total = 6.9%
Percent of Left Turns from Minor Street = 0.0%
Percent of Right Turns from Minor Street = 100.0%
Percent of Minor Street Right Turns to Remove from Warrant Analysis = 0%
WARRANT BASIS = **100%**

Warrant No. 1 - Vehicular Volume is met

Condition A - Minimum Vehicular Volume is met

Average Major Street % of Warrant				Average Minor Street % of Warrant			
2411.4	/ 600	=	402%	179.4	/ 150	=	120%

Hourly percent of warrant

	7:00 - 8:00	8:00 - 9:00	9:00 - 10:00	10:00 - 11:00	11:00 - 12:00	12:00 - 13:00	13:00 - 14:00	14:00 - 15:00	15:00 - 16:00	16:00 - 17:00	17:00 - 18:00	18:00 - 19:00
Major St.	246%	262%	331%	399%	425%	458%	450%	488%	470%	458%	433%	404%
Minor St.	33%	52%	61%	124%	133%	111%	109%	153%	175%	186%	151%	147%

Condition B - Interruption to Continuous Traffic is met

Average Major Street % of Warrant				Average Minor Street % of Warrant			
2411.4	/ 900	=	268%	179.4	/ 75	=	239%

Hourly percent of warrant

	7:00 - 8:00	8:00 - 9:00	9:00 - 10:00	10:00 - 11:00	11:00 - 12:00	12:00 - 13:00	13:00 - 14:00	14:00 - 15:00	15:00 - 16:00	16:00 - 17:00	17:00 - 18:00	18:00 - 19:00
Major St.	164%	175%	221%	266%	284%	306%	300%	325%	313%	305%	289%	269%
Minor St.	67%	104%	121%	248%	267%	221%	217%	307%	351%	372%	301%	295%

80% Combination of Conditions A & B is met

Warrant No. 2 - Four Hour Vehicular Volume is met

Hourly percent of warrant

	7:00 - 8:00	8:00 - 9:00	9:00 - 10:00	10:00 - 11:00	11:00 - 12:00	12:00 - 13:00	13:00 - 14:00	14:00 - 15:00	15:00 - 16:00	16:00 - 17:00	17:00 - 18:00	18:00 - 19:00
Minor St.	63%	98%	114%	233%	250%	208%	204%	288%	329%	349%	283%	276%

Warrant No. 3 - Peak Hour is met

Percent of warrant
Overall Peak Hour: 14:15 - 15:15
Minor St. 250%

Percent of warrant
Higher Volume Side Street Peak Hour: 16:00 - 17:00
Minor St. 279%

Warrant No. 4 - Pedestrian Volume. Pedestrian volume shown are minumum volumes assuming heavy major street traffic. If these volumes are met, warrant 4 requires further engineering analysis

S

Minimum 4 hour ped. volume crossing major street: 107

Minimum peak hour ped. volume crossing major street: 133

Number of pedestrians crossing major street

	7:00 - 8:00	8:00 - 9:00	9:00 - 10:00	10:00 - 11:00	11:00 - 12:00	12:00 - 13:00	13:00 - 14:00	14:00 - 15:00	15:00 - 16:00	16:00 - 17:00	17:00 - 18:00	18:00 - 19:00
Major t.	2	1	0	2	0	0	0	1	1	0	1	0

Warrant No. 7 - Crash Experience (Requires 3 criteria analysis by engineering)

Total Number: 0 From: 1/1/2005 to 1/1/2008
Accident Rate: 0.00 per million entering vehicles

Types of Accidents	No.	/	Avg.		No.	/	Avg.
Right Angle	0	/	0.0	Rear End	0	/	0.0
Lost Control	0	/	0.0	Side Swipe	0	/	0.0
Left Turn	0	/	0.0	Other	0	/	0.0

SOUTH CAROLINA DEPARTMENT OF TRANSPORTATION
DISTRICT 1
TRAFFIC ENGINEERING

County: Richland City: Columbia Date: 11/21/2016

Major Rt: Harbison Blvd * Not on State System Minor Rt: Columbiana Cir-Park Terrace Dr * Not on State System

Day of Week: Monday Weather: Clear Office: Short Counts JMS

Type of Control: Signal Speed Limit (major st) 35

Direction of Minor Street: E-W Intersection ADT - 39140 (Calc)

Number of Lanes (major st)* 2 Number of Lanes (minor st)* 2

* Each Direction

INTERSECTION VOLUME SUMMARY

	From N Harbison Blvd				From S Harbison Blvd				From E Columbiana Cir-Par				From W Columbiana Cir-Par				Total	Total
	LT	STR	RT	TOT	LT	STR	RT	TOT	LT	STR	RT	TOT	LT	STR	RT	TOT	Vol	Peds
7:00 - 7:15	24	93	12	129	2	110	14	126	13	0	2	15	1	1	1	3	273	0
7:15 - 7:30	13	115	16	144	3	143	20	166	31	3	8	42	0	1	0	1	353	0
7:30 - 7:45	21	137	15	173	5	169	39	213	26	2	9	37	9	3	1	13	436	7
7:45 - 8:00	21	141	15	177	6	182	41	229	26	9	16	51	7	5	1	13	470	1
8:00 - 8:15	15	148	15	178	1	135	35	171	13	3	8	24	1	3	1	5	378	2
8:15 - 8:30	28	116	19	163	3	158	53	214	28	4	11	43	3	2	5	10	430	1
8:30 - 8:45	33	114	22	169	7	125	30	162	21	9	11	41	4	3	3	10	382	8
8:45 - 9:00	26	136	47	209	5	122	33	160	41	7	20	68	7	6	4	17	454	5
9:00 - 9:15	23	136	28	187	9	121	35	165	41	13	17	71	9	3	8	20	443	0
9:15 - 9:30	29	160	0	189	6	128	39	173	30	5	9	44	15	5	11	31	437	0
9:30 - 9:45	16	152	0	168	11	162	39	212	41	12	26	79	7	4	10	21	480	1
9:45 - 10:00	28	171	100	299	9	121	52	182	45	22	23	90	24	6	13	43	614	1
10:00 - 10:15	24	168	14	206	20	162	29	211	47	17	39	103	15	8	5	28	548	0
10:15 - 10:30	24	154	50	228	15	152	48	215	58	24	24	106	27	11	14	52	601	1
10:30 - 10:45	30	175	75	280	17	170	45	232	58	14	27	99	36	12	15	63	674	0
10:45 - 11:00	31	215	86	332	17	171	49	237	54	19	31	104	35	16	19	70	743	4
11:00 - 11:15	35	210	114	359	19	0	36	55	53	24	41	118	30	11	20	61	593	0
11:15 - 11:30	41	223	93	357	29	193	33	255	50	21	40	111	34	26	22	82	805	2
11:30 - 11:45	33	197	86	316	24	229	40	293	82	27	29	138	48	10	28	86	833	0
11:45 - 12:00	43	253	111	407	21	201	41	263	78	27	37	142	44	18	19	81	893	5
12:00 - 12:15	10	277	109	396	16	202	58	276	79	21	47	147	72	21	19	112	931	2
12:15 - 12:30	29	254	129	412	24	247	55	326	74	33	41	148	58	21	22	101	987	4
12:30 - 12:45	39	238	103	380	22	234	43	299	76	31	48	155	76	18	43	137	971	1
12:45 - 13:00	51	221	124	396	21	248	37	306	69	34	55	158	79	30	36	145	1005	1
13:00 - 13:15	19	219	88	326	13	275	69	357	72	38	28	138	70	29	31	130	951	0
13:15 - 13:30	28	196	75	299	19	307	34	360	60	37	58	155	62	31	35	128	942	0
13:30 - 13:45	42	221	99	362	22	239	49	310	80	16	56	152	71	29	21	121	945	0
13:45 - 14:00	29	203	89	321	21	242	53	316	75	32	59	166	74	28	27	129	932	2
14:00 - 14:15	21	199	92	312	19	262	53	334	68	24	69	161	75	27	33	135	942	1
14:15 - 14:30	36	203	94	333	24	254	59	337	71	35	55	161	64	23	34	121	952	2
14:30 - 14:45	24	166	83	273	22	268	50	340	70	20	43	133	75	21	24	120	866	2
14:45 - 15:00	29	193	66	288	22	243	52	317	63	23	49	135	66	29	31	126	866	0
15:00 - 15:15	26	151	55	232	30	261	50	341	58	25	50	133	63	25	28	116	822	1
15:15 - 15:30	17	127	0	144	17	223	44	284	65	34	38	137	75	23	17	115	680	1
15:30 - 15:45	28	175	68	271	17	211	59	287	67	27	36	130	63	22	25	110	798	1
15:45 - 16:00	43	174	64	281	47	206	48	301	57	30	58	145	62	13	27	102	829	5
16:00 - 16:15	31	243	91	365	16	238	43	297	71	33	42	146	74	21	21	116	924	6
16:15 - 16:30	24	210	97	331	17	227	48	292	77	11	59	147	60	17	26	103	873	3
16:30 - 16:45	34	232	88	354	26	231	37	294	68	24	45	137	57	16	33	106	891	0
16:45 - 17:00	37	209	85	331	23	184	38	245	75	25	35	135	65	26	17	108	819	0
17:00 - 17:15	23	228	73	324	14	253	61	328	54	28	54	136	81	16	20	117	905	1
17:15 - 17:30	41	221	71	333	16	227	48	291	68	22	66	156	59	15	31	105	885	1
17:30 - 17:45	31	204	75	310	12	210	43	265	77	27	45	149	68	24	20	112	836	1
17:45 - 18:00	24	207	79	310	18	192	61	271	74	27	40	141	48	11	12	71	793	1
18:00 - 18:15	30	212	86	328	13	239	55	307	57	21	51	129	77	13	13	103	867	1
18:15 - 18:30	36	216	76	328	17	184	42	243	71	27	53	151	89	17	18	124	846	0
18:30 - 18:45	35	228	89	352	12	203	39	254	70	26	43	139	67	22	30	119	864	0
18:45 - 19:00	30	195	66	291	12	214	55	281	60	18	41	119	47	10	19	76	767	0
TOTAL	1385	9036	3232	13653	781	9478	2134	12393	2762	1011	1792	5565	2253	752	913	3918	35529	75
Trucks	17	97	24	138	3	79	8	90	18	7	16	41	15	4	6	25	294	0.8%
School Buses	0	18	0	18	16	0	4	20	5	0	12	17	1	1	0	2	57	0.2%

TOTAL AND PEAK HOUR VOLUME DIAGRAMS

Harbison Blvd AT Columbiana Cir-Park Terrace Dr Date: 11/21/2016

12.0 HOUR TOTAL VOLUME
FROM 7:00 TO 15:00

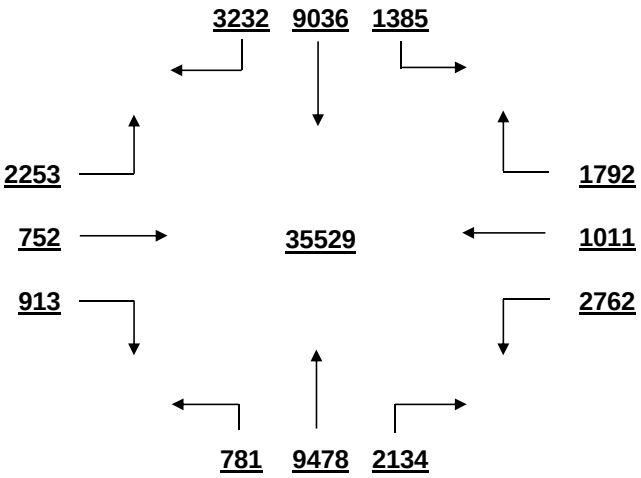

OVERALL PEAK HOUR VOLUME
FROM 12:15 TO 13:15

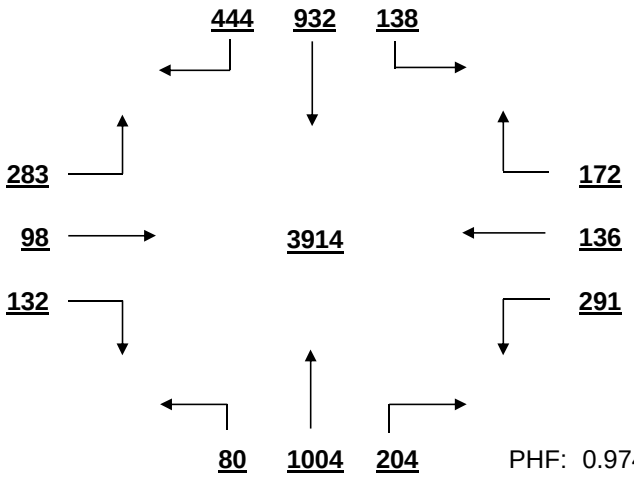

PHF: 0.974

AM PEAK HOUR VOLUME (0:00-10:45)
FROM 9:45 TO 10:45

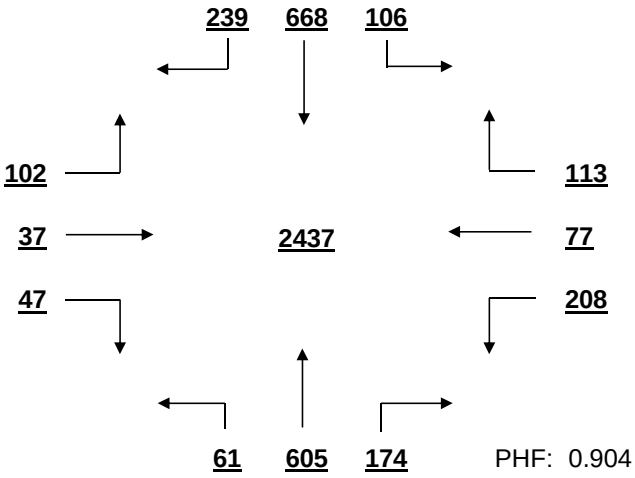

PHF: 0.904

PM PEAK HOUR VOLUME (14:15-23:45)
FROM 15:45 TO 16:45

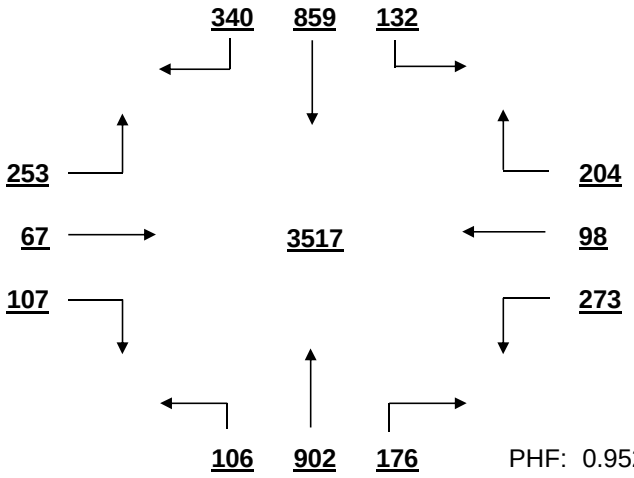

PHF: 0.952

MID-DAY PEAK HOUR VOLUME (11:00-14:00)
FROM 12:15 TO 13:15

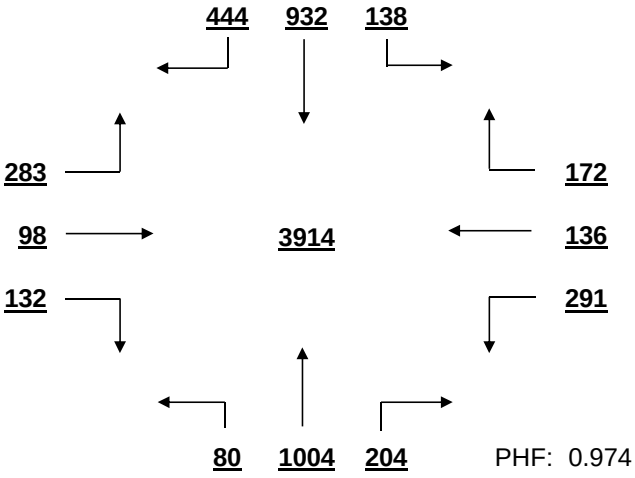

PHF: 0.974

OTHER HOUR VOLUME
FROM 7:00 TO 8:00

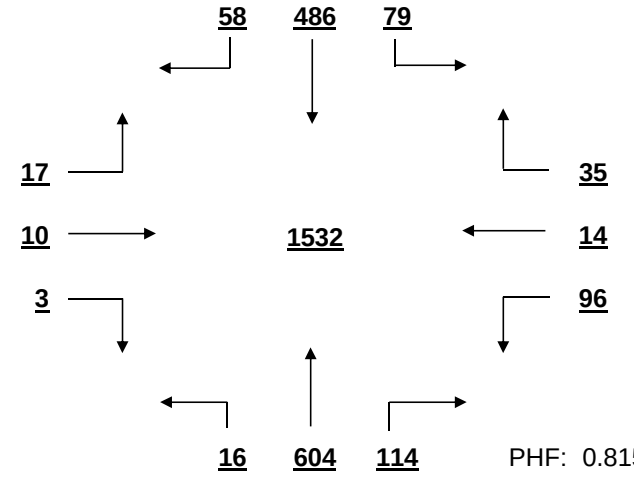

PHF: 0.815

SIGNAL WARRANT ANALYSIS

Harbison Blvd AT Columbiana Cir-Park Terrace Dr Date: 11/21/2016

Minor Street Volume, percent of total = 26.7%
Percent of Left Turns from Minor Street = = 52.9%
Percent of Right Turns from Minor Street = 28.5%
Percent of Minor Street Right Turns to Remove from Warrant Analysis = 0%
WARRANT BASIS = **100%**

Warrant No. 1 - Vehicular Volume is met

Condition A - Minimum Vehicular Volume is met

Average Major Street % of Warrant				Average Minor Street % of Warrant			
2170.5	/ 600	=	362%	463.8	/ 200	=	232%

Hourly percent of warrant

	7:00 - 8:00	8:00 - 9:00	9:00 - 10:00	10:00 - 11:00	11:00 - 12:00	12:00 - 13:00	13:00 - 14:00	14:00 - 15:00	15:00 - 16:00	16:00 - 17:00	17:00 - 18:00	18:00 - 19:00
Major St.	226%	238%	263%	324%	384%	465%	442%	422%	357%	418%	405%	397%
Minor St.	73%	88%	142%	206%	255%	304%	306%	295%	273%	283%	291%	269%

Condition B - Interruption to Continuous Traffic is met

Average Major Street % of Warrant				Average Minor Street % of Warrant			
2170.5	/ 900	=	241%	463.8	/ 100	=	464%

Hourly percent of warrant

	7:00 - 8:00	8:00 - 9:00	9:00 - 10:00	10:00 - 11:00	11:00 - 12:00	12:00 - 13:00	13:00 - 14:00	14:00 - 15:00	15:00 - 16:00	16:00 - 17:00	17:00 - 18:00	18:00 - 19:00
Major St.	151%	158%	175%	216%	256%	310%	295%	282%	238%	279%	270%	265%
Minor St.	145%	176%	284%	412%	509%	608%	611%	590%	545%	565%	582%	538%

80% Combination of Conditions A & B is met

Warrant No. 2 - Four Hour Vehicular Volume is met

Hourly percent of warrant

	7:00 - 8:00	8:00 - 9:00	9:00 - 10:00	10:00 - 11:00	11:00 - 12:00	12:00 - 13:00	13:00 - 14:00	14:00 - 15:00	15:00 - 16:00	16:00 - 17:00	17:00 - 18:00	18:00 - 19:00
Minor St.	126%	153%	247%	358%	443%	529%	531%	513%	474%	491%	506%	468%

Warrant No. 3 - Peak Hour is met

Overall Peak Hour: 12:15 - 13:15 — Percent of warrant
Minor St. 399%

Higher Volume Side Street Peak Hour: 13:30 - 14:30 — Percent of warrant
Minor St. 427%

Warrant No. 4 - Pedestrian Volume. Pedestrian volume shown are minumum volumes assuming heavy major street traffic. If these volumes are met, warrant 4 requires further engineering analysis

S

Minimum 4 hour ped. volume crossing major street: 107

Minimum peak hour ped. volume crossing major street: 133

Number of pedestrians crossing major street

	7:00 - 8:00	8:00 - 9:00	9:00 - 10:00	10:00 - 11:00	11:00 - 12:00	12:00 - 13:00	13:00 - 14:00	14:00 - 15:00	15:00 - 16:00	16:00 - 17:00	17:00 - 18:00	18:00 - 19:00
Major t.	4	9	2	5	6	8	1	5	3	4	4	1

Warrant No. 7 - Crash Experience (Requires 3 criteria analysis by engineering)

Total Number: 0 From: 1/1/2005 to 1/1/2008
Accident Rate: 0.00 per million entering vehicles

Types of Accidents	No.	/	Avg.		No.	/	Avg.
Right Angle	0	/	0.0	Rear End	0	/	0.0
Lost Control	0	/	0.0	Side Swipe	0	/	0.0
Left Turn	0	/	0.0	Other	0	/	0.0

SOUTH CAROLINA DEPARTMENT OF TRANSPORTATION
DISTRICT 1
TRAFFIC ENGINEERING

County: Richland City: Columbia Date: 11/22/2016

Major Rt: Harbison Blvd * Not on State System Minor Rt: Columbiana Dr-Chick Fil A * Not on State System

Day of Week: Tuesday Weather: Clear Office: Short Counts JMS

Type of Control: Signal Speed Limit (major st) 35

Direction of Minor Street: E-W Intersection ADT - 34400 (Calc)

Number of Lanes (major st)* 2 Number of Lanes (minor st)* 2

* Each Direction

INTERSECTION VOLUME SUMMARY

	From N Harbison Blvd				From S Harbison Blvd				From E Columbiana Dr-Chic				From W Columbiana Dr-Chic				Total	Total
	LT	STR	RT	TOT	LT	STR	RT	TOT	LT	STR	RT	TOT	LT	STR	RT	TOT	Vol	Peds
7:00 - 7:15	13	66	26	105	7	59	9	75	2	2	16	20	46	5	19	70	270	0
7:15 - 7:30	14	89	50	153	13	78	12	103	3	5	16	24	79	3	32	114	394	0
7:30 - 7:45	7	99	44	150	11	78	8	97	9	3	14	26	117	5	37	159	432	1
7:45 - 8:00	11	138	44	193	10	108	14	132	6	2	23	31	105	9	53	167	523	1
8:00 - 8:15	13	123	17	153	25	85	11	121	5	3	20	28	74	6	48	128	430	1
8:15 - 8:30	20	100	32	152	13	104	7	124	4	5	24	33	87	9	43	139	448	1
8:30 - 8:45	15	71	40	126	8	84	2	94	6	2	18	26	62	9	37	108	354	2
8:45 - 9:00	13	121	48	182	10	88	8	106	7	5	18	30	54	6	36	96	414	3
9:00 - 9:15	12	125	39	176	11	81	7	99	4	5	14	23	68	2	39	109	407	2
9:15 - 9:30	21	141	0	162	19	115	6	140	5	1	14	20	73	4	36	113	435	5
9:30 - 9:45	13	144	0	157	25	140	9	174	7	3	20	30	49	11	52	112	473	0
9:45 - 10:00	19	153	47	219	34	121	6	161	8	10	20	38	60	11	54	125	543	0
10:00 - 10:15	17	146	57	220	38	145	14	197	10	12	15	37	55	4	63	122	576	2
10:15 - 10:30	11	159	57	227	42	149	12	203	7	3	16	26	67	5	47	119	575	0
10:30 - 10:45	12	169	65	246	38	161	5	204	6	3	19	28	71	6	72	149	627	2
10:45 - 11:00	15	200	67	282	45	167	11	223	6	2	23	31	77	4	58	139	675	1
11:00 - 11:15	11	220	57	288	44	0	12	56	7	4	17	28	75	5	55	135	507	0
11:15 - 11:30	18	208	57	283	51	198	14	263	4	10	18	32	63	5	60	128	706	0
11:30 - 11:45	21	227	70	318	49	214	16	279	6	3	21	30	78	1	83	162	789	2
11:45 - 12:00	13	239	74	326	53	184	16	253	3	4	30	37	81	6	85	172	788	0
12:00 - 12:15	20	256	69	345	65	171	22	258	7	6	29	42	89	7	89	185	830	1
12:15 - 12:30	17	251	80	348	60	243	17	320	8	8	22	38	91	4	75	170	876	0
12:30 - 12:45	22	253	65	340	63	203	12	278	8	6	19	33	94	6	87	187	838	2
12:45 - 13:00	13	244	70	327	60	213	25	298	11	5	20	36	77	7	91	175	836	0
13:00 - 13:15	14	236	51	301	67	265	16	348	7	5	25	37	96	6	102	204	890	1
13:15 - 13:30	14	215	62	291	56	261	8	325	11	7	30	48	81	7	103	191	855	0
13:30 - 13:45	18	224	70	312	61	218	18	297	10	2	26	38	80	2	83	165	812	1
13:45 - 14:00	12	227	71	310	55	219	17	291	4	2	24	30	90	5	81	176	807	2
14:00 - 14:15	20	296	70	386	65	225	12	302	12	7	21	40	87	4	65	156	884	3
14:15 - 14:30	14	220	83	317	63	246	16	325	12	6	23	41	80	5	57	142	825	0
14:30 - 14:45	15	200	64	279	64	233	16	313	6	5	27	38	93	4	78	175	805	0
14:45 - 15:00	10	219	48	277	55	215	18	288	7	6	22	35	97	5	89	191	791	2
15:00 - 15:15	9	158	59	226	48	239	13	300	6	1	24	31	87	4	85	176	733	0
15:15 - 15:30	8	149	0	157	54	215	10	279	7	7	17	31	71	8	63	142	609	0
15:30 - 15:45	13	181	68	262	49	201	10	260	7	3	14	24	83	5	60	148	694	3
15:45 - 16:00	5	174	55	234	52	236	9	297	1	3	20	24	79	4	79	162	717	0
16:00 - 16:15	7	237	86	330	50	209	16	275	8	4	11	23	88	3	75	166	794	0
16:15 - 16:30	12	209	96	317	56	239	13	308	3	5	18	26	65	1	65	131	782	3
16:30 - 16:45	10	210	89	309	62	212	8	282	3	6	10	19	73	4	79	156	766	1
16:45 - 17:00	4	199	94	297	62	186	11	259	6	3	16	25	76	4	66	146	727	0
17:00 - 17:15	7	222	81	310	56	237	9	302	2	5	14	21	82	6	65	153	786	1
17:15 - 17:30	14	198	90	302	68	206	7	281	4	1	14	19	73	3	73	149	751	4
17:30 - 17:45	12	210	93	315	45	204	20	269	4	4	20	28	76	1	61	138	750	0
17:45 - 18:00	9	192	91	292	52	184	8	244	0	5	17	22	71	2	82	155	713	0
18:00 - 18:15	11	186	87	284	61	255	18	334	6	5	18	29	82	6	70	158	805	0
18:15 - 18:30	18	183	108	309	53	187	9	249	4	1	22	27	66	6	76	148	733	0
18:30 - 18:45	16	222	94	332	49	176	11	236	3	4	20	27	88	2	74	164	759	0
18:45 - 19:00	9	176	80	265	50	179	9	238	3	6	17	26	78	5	78	161	690	0
TOTAL	642	8885	2965	12492	2147	8436	577	11160	285	215	936	1436	3734	242	3160	7136	32224	47
Trucks	2	80	37	119	11	49	1	61	0	1	3	4	21	0	22	43	227	0.7%
School Buses	0	20	14	34	1	12	0	13	0	0	0	0	10	0	12	22	69	0.2%

TOTAL AND PEAK HOUR VOLUME DIAGRAMS

Harbison Blvd AT Columbiana Dr-Chick Fil A Date: 11/22/2016

12.0 HOUR TOTAL VOLUME
FROM 7:00 TO 15:00

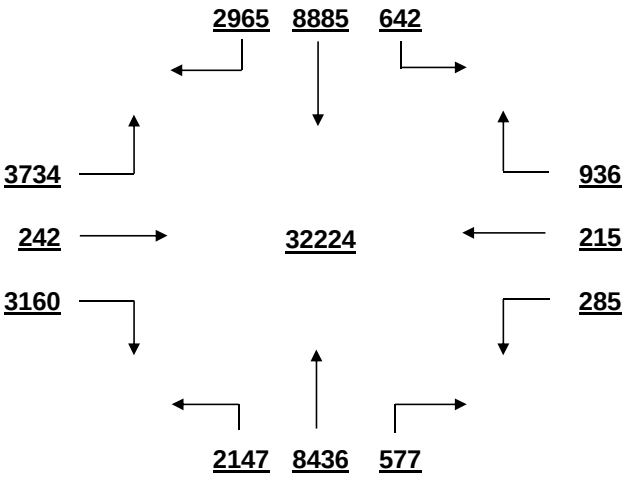

OVERALL PEAK HOUR VOLUME
FROM 12:15 TO 13:15

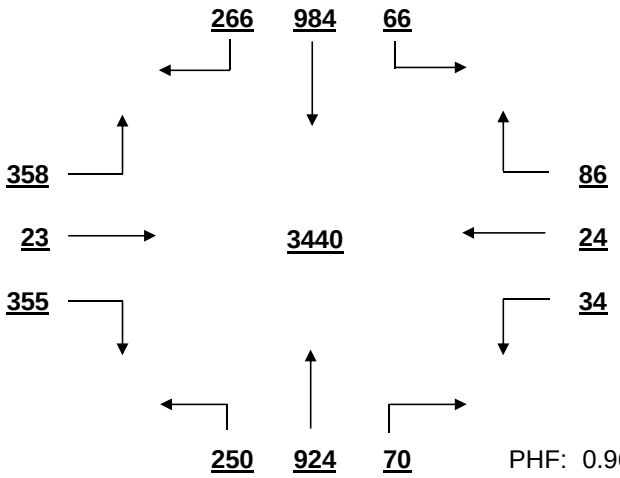

PHF: 0.966

AM PEAK HOUR VOLUME (0:00-10:45)
FROM 9:45 TO 10:45

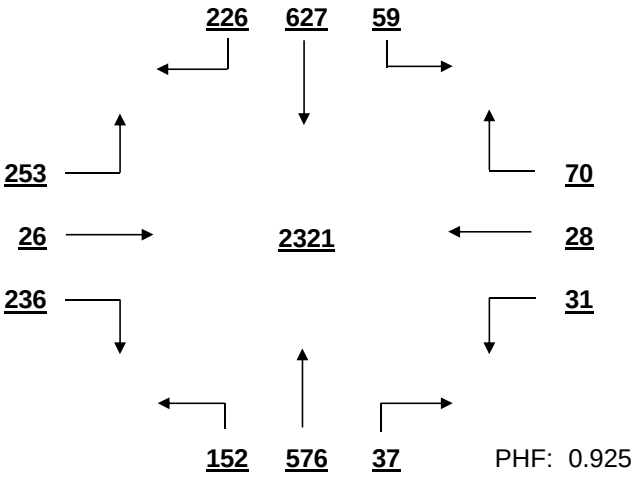

PHF: 0.925

PM PEAK HOUR VOLUME (14:15-23:45)
FROM 14:15 TO 15:15

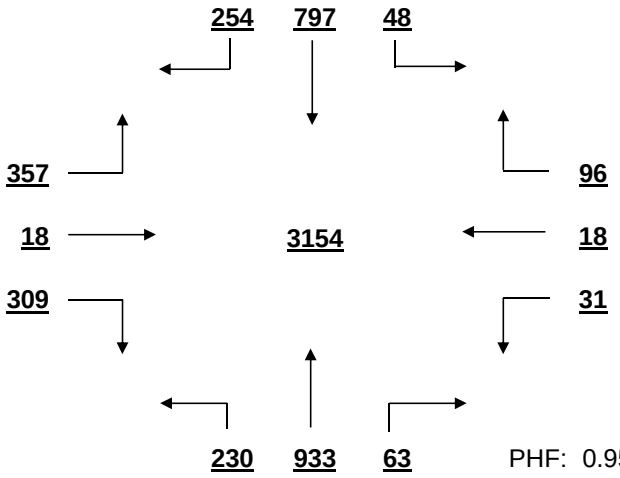

PHF: 0.956

MID-DAY PEAK HOUR VOLUME (11:00-14:00)
FROM 12:15 TO 13:15

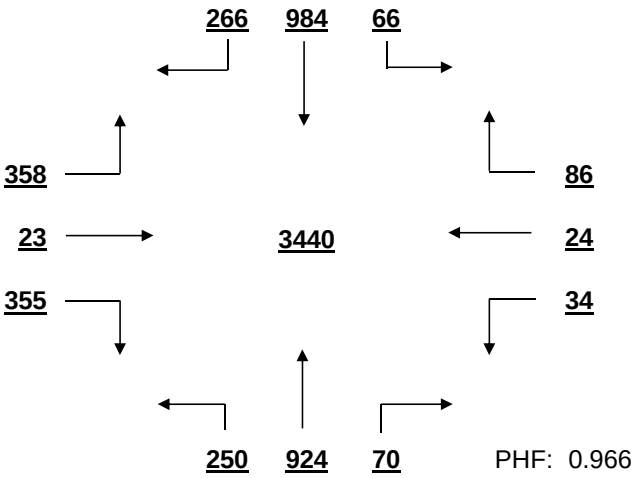

PHF: 0.966

OTHER HOUR VOLUME
FROM 7:00 TO 8:00

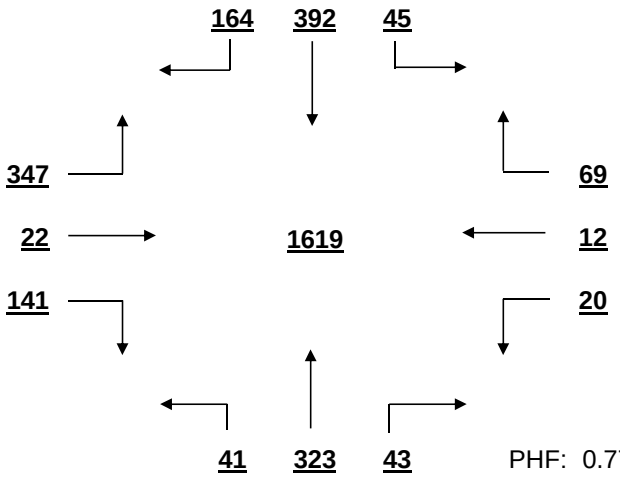

PHF: 0.774

SIGNAL WARRANT ANALYSIS

Harbison Blvd AT Columbiana Dr-Chick Fil A Date: 11/22/2016

Minor Street Volume, percent of total = 26.6%
Percent of Left Turns from Minor Street = 46.9%
Percent of Right Turns from Minor Street = 47.8%
Percent of Minor Street Right Turns to Remove from Warrant Analysis = 0%
WARRANT BASIS = **100%**

Warrant No. 1 - Vehicular Volume is met

Condition A - Minimum Vehicular Volume is met

Average Major Street % of Warrant				Average Minor Street % of Warrant			
1971.0	/ 600	=	329%	594.7	/ 200	=	297%

Hourly percent of warrant

	7:00-8:00	8:00-9:00	9:00-10:00	10:00-11:00	11:00-12:00	12:00-13:00	13:00-14:00	14:00-15:00	15:00-16:00	16:00-17:00	17:00-18:00	18:00-19:00
Major St.	168%	176%	215%	300%	344%	419%	413%	415%	336%	396%	386%	375%
Minor St.	255%	236%	230%	265%	299%	359%	368%	332%	314%	300%	298%	316%

Condition B - Interruption to Continuous Traffic is met

Average Major Street % of Warrant				Average Minor Street % of Warrant			
1971.0	/ 900	=	219%	594.7	/ 100	=	595%

Hourly percent of warrant

	7:00-8:00	8:00-9:00	9:00-10:00	10:00-11:00	11:00-12:00	12:00-13:00	13:00-14:00	14:00-15:00	15:00-16:00	16:00-17:00	17:00-18:00	18:00-19:00
Major St.	112%	118%	143%	200%	230%	279%	275%	276%	224%	264%	257%	250%
Minor St.	510%	471%	459%	529%	597%	717%	736%	664%	628%	599%	595%	631%

80% Combination of Conditions A & B is met

Warrant No. 2 - Four Hour Vehicular Volume is met

Hourly percent of warrant

	7:00-8:00	8:00-9:00	9:00-10:00	10:00-11:00	11:00-12:00	12:00-13:00	13:00-14:00	14:00-15:00	15:00-16:00	16:00-17:00	17:00-18:00	18:00-19:00
Minor St.	267%	271%	399%	460%	519%	623%	640%	577%	546%	521%	517%	549%

Warrant No. 3 - Peak Hour is met

		Percent of warrant			Percent of warrant
Overall Peak Hour:	12:15-13:15		Higher Volume Side Street Peak Hour:	12:30-13:30	
Minor St.		491%	Minor St.		505%

Warrant No. 4 - Pedestrian Volume. Pedestrian volume shown are minumum volumes assuming heavy major street traffic. If these volumes are met, warrant 4 requires further engineering analysis

S

Minimum 4 hour ped. volume crossing major street: 107

Minimum peak hour ped. volume crossing major street: 133

Number of pedestrians crossing major street

	7:00-8:00	8:00-9:00	9:00-10:00	10:00-11:00	11:00-12:00	12:00-13:00	13:00-14:00	14:00-15:00	15:00-16:00	16:00-17:00	17:00-18:00	18:00-19:00
Major t.	0	1	2	0	0	2	0	0	0	0	0	0

Warrant No. 7 - Crash Experience (Requires 3 criteria analysis by engineering)

Total Number: 0 From: 1/1/2005 to 1/1/2008

Accident Rate: 0.00 per million entering vehicles

Types of Accidents	No.	/	Avg.		No.	/	Avg.
Right Angle	0	/	0.0	Rear End	0	/	0.0
Lost Control	0	/	0.0	Side Swipe	0	/	0.0
Left Turn	0	/	0.0	Other	0	/	0.0

SOUTH CAROLINA DEPARTMENT OF TRANSPORTATION
DISTRICT 1
TRAFFIC ENGINEERING

County: Richland City: Columbia Date: 11/21/2016

Major Rt: Harbison Blvd * Not on State System Minor Rt: Rooms 2 Go-Pier 1 DW's * Not on State System

Day of Week: Monday Weather: Clear Office: Short Counts JMS

Type of Control: Signal Speed Limit (major st) 35

Direction of Minor Street: E-W Intersection ADT - 28160 (Calc)

Number of Lanes (major st)* 2 Number of Lanes (minor st)* 1

* Each Direction

INTERSECTION VOLUME SUMMARY

	From N Harbison Blvd				From S Harbison Blvd				From E Rooms 2 Go-Pier 1				From W Rooms 2 Go-Pier 1				Total	Total
	LT	STR	RT	TOT	LT	STR	RT	TOT	LT	STR	RT	TOT	LT	STR	RT	TOT	Vol	Peds
7:00 - 7:15	1	83	0	84	0	72	2	74	3	0	0	3	0	0	0	0	161	0
7:15 - 7:30	3	107	0	110	0	89	4	93	0	0	1	1	0	0	1	1	205	0
7:30 - 7:45	2	128	1	131	0	90	4	94	1	0	1	2	0	0	0	0	227	0
7:45 - 8:00	2	159	1	162	2	118	9	129	2	0	2	4	0	0	1	1	296	0
8:00 - 8:15	1	143	1	145	4	105	3	112	3	0	6	9	0	0	0	0	266	0
8:15 - 8:30	3	120	0	123	0	104	1	105	2	0	3	5	0	0	0	0	233	0
8:30 - 8:45	1	103	0	104	1	79	6	86	3	0	1	4	0	0	1	1	195	0
8:45 - 9:00	7	123	1	131	0	101	10	111	1	0	1	2	0	0	0	0	244	0
9:00 - 9:15	9	140	3	152	7	88	16	111	8	0	3	11	0	0	2	2	276	0
9:15 - 9:30	17	130	0	147	3	111	24	138	8	2	11	21	2	1	1	4	310	0
9:30 - 9:45	11	167	0	178	4	139	18	161	11	2	11	24	3	1	4	8	371	0
9:45 - 10:00	13	159	2	174	7	129	16	152	7	2	10	19	2	1	3	6	351	0
10:00 - 10:15	23	162	1	186	8	150	18	176	11	0	17	28	3	0	1	4	394	0
10:15 - 10:30	25	150	2	177	8	177	25	210	18	5	13	36	3	3	4	10	433	0
10:30 - 10:45	23	171	6	200	10	152	29	191	18	1	19	38	5	1	8	14	443	0
10:45 - 11:00	25	199	2	226	6	184	32	222	25	2	17	44	5	1	10	16	508	0
11:00 - 11:15	31	197	5	233	7	0	42	49	25	2	15	42	5	2	8	15	339	0
11:15 - 11:30	37	186	2	225	11	214	30	255	24	5	21	50	9	5	10	24	554	0
11:30 - 11:45	36	223	3	262	18	208	36	262	35	1	30	66	3	4	7	14	604	0
11:45 - 12:00	48	236	1	285	23	193	31	247	27	4	29	60	1	4	11	16	608	0
12:00 - 12:15	50	258	4	312	10	212	35	257	26	5	29	60	3	2	20	25	654	0
12:15 - 12:30	53	264	6	323	20	209	43	272	26	3	46	75	9	3	15	27	697	0
12:30 - 12:45	36	244	0	280	19	233	42	294	33	3	35	71	13	4	20	37	682	0
12:45 - 13:00	56	248	2	306	16	219	49	284	42	7	46	95	7	1	24	32	717	0
13:00 - 13:15	48	265	4	317	12	223	31	266	38	8	47	93	12	1	26	39	715	0
13:15 - 13:30	47	251	5	303	13	221	39	273	33	4	62	99	13	4	10	27	702	0
13:30 - 13:45	37	237	4	278	15	237	29	281	36	4	44	84	5	4	18	27	670	1
13:45 - 14:00	32	229	9	270	12	176	41	229	35	6	38	79	10	3	16	29	607	0
14:00 - 14:15	38	202	3	243	17	218	35	270	30	7	40	77	5	3	27	35	625	0
14:15 - 14:30	36	212	6	254	16	194	33	243	32	3	53	88	9	4	19	32	617	0
14:30 - 14:45	26	206	4	236	17	224	28	269	24	1	42	67	7	1	14	22	594	0
14:45 - 15:00	31	259	0	290	13	205	32	250	24	1	36	61	7	2	14	23	624	0
15:00 - 15:15	15	203	4	222	19	211	35	265	32	3	23	58	5	0	13	18	563	0
15:15 - 15:30	24	156	0	180	10	202	22	234	20	2	36	58	9	3	5	17	489	0
15:30 - 15:45	27	197	1	225	15	201	19	235	21	7	32	60	6	0	12	18	538	1
15:45 - 16:00	35	195	2	232	13	205	25	243	19	1	38	58	6	4	14	24	557	0
16:00 - 16:15	30	228	4	262	14	207	33	254	27	1	26	54	9	5	5	19	589	0
16:15 - 16:30	30	218	1	249	14	204	37	255	18	3	42	63	5	4	13	22	589	0
16:30 - 16:45	26	216	4	246	6	218	27	251	27	4	33	64	3	2	12	17	578	0
16:45 - 17:00	19	219	1	239	14	184	28	226	37	1	30	68	6	2	10	18	551	1
17:00 - 17:15	21	224	1	246	6	226	33	265	26	2	26	54	7	2	10	19	584	0
17:15 - 17:30	24	222	3	249	8	203	38	249	34	1	25	60	6	1	8	15	573	0
17:30 - 17:45	30	204	4	238	13	199	33	245	23	3	31	57	11	1	7	19	559	0
17:45 - 18:00	29	215	1	245	12	185	35	232	26	0	37	63	3	1	6	10	550	0
18:00 - 18:15	28	198	4	230	5	228	38	271	20	1	30	51	5	4	5	14	566	0
18:15 - 18:30	18	190	3	211	12	184	17	213	31	2	17	50	7	2	8	17	491	0
18:30 - 18:45	45	220	4	269	11	159	42	212	19	5	38	62	4	2	9	15	558	0
18:45 - 19:00	25	178	2	205	9	152	30	191	28	0	33	61	5	0	5	10	467	0
TOTAL	1234	9244	117	10595	480	8242	1285	10007	1019	114	1226	2359	238	88	437	763	23724	3
Trucks	9	83	1	93	2	115	4	121	5	2	3	10	0	0	0	0	224	0.9%
School Buses	1	32	0	33	0	11	0	11	0	0	0	0	0	0	0	0	44	0.2%

TOTAL AND PEAK HOUR VOLUME DIAGRAMS

Harbison Blvd AT Rooms 2 Go-Pier 1 DW's Date: 11/21/2016

12.0 HOUR TOTAL VOLUME
FROM 7:00 TO 15:00

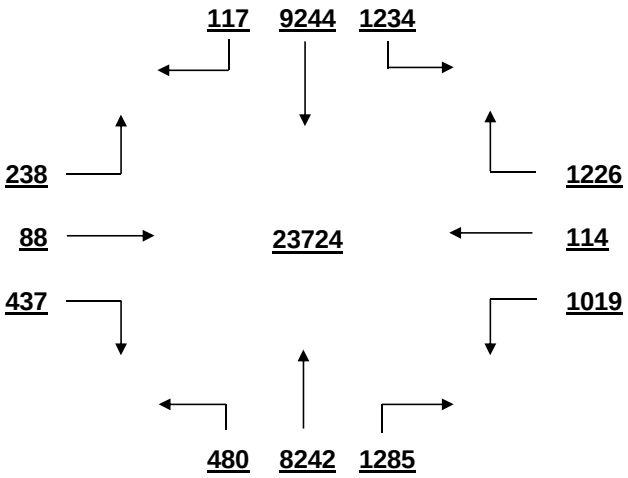

OVERALL PEAK HOUR VOLUME
FROM 12:30 TO 13:30

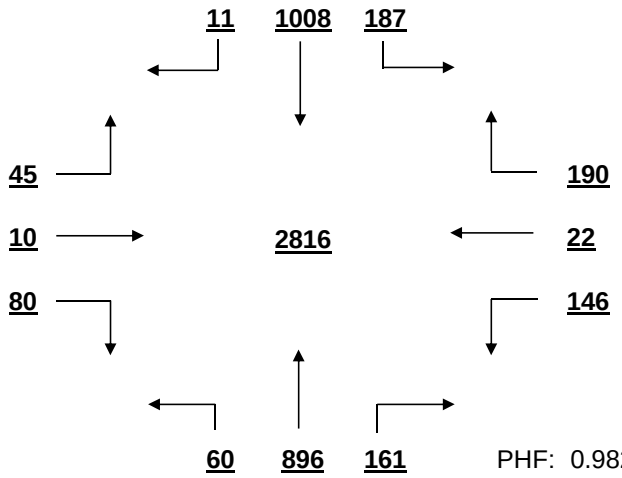

PHF: 0.982

AM PEAK HOUR VOLUME (0:00-10:45)
FROM 9:45 TO 10:45

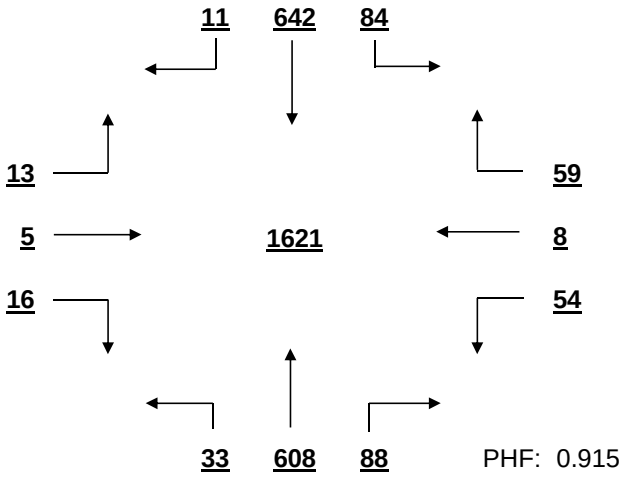

PHF: 0.915

PM PEAK HOUR VOLUME (14:15-23:45)
FROM 14:15 TO 15:15

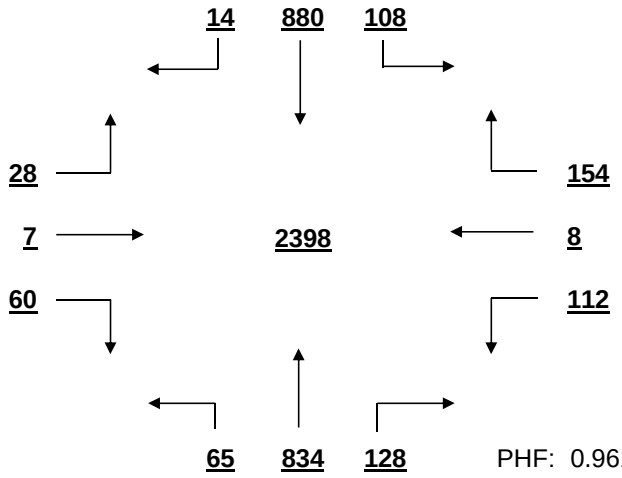

PHF: 0.961

MID-DAY PEAK HOUR VOLUME (11:00-14:00)
FROM 12:30 TO 13:30

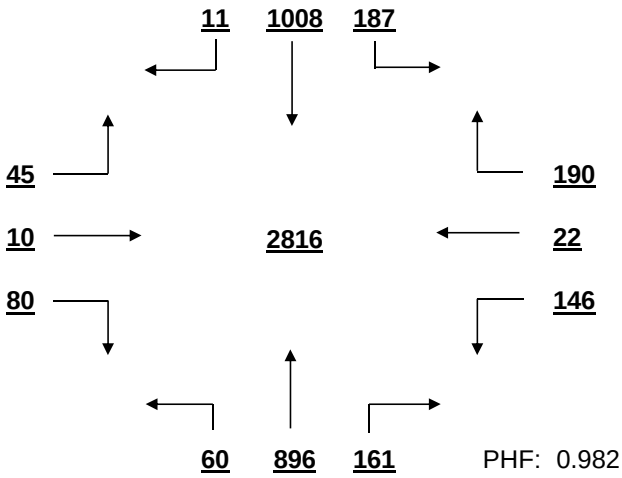

PHF: 0.982

OTHER HOUR VOLUME
FROM 7:00 TO 8:00

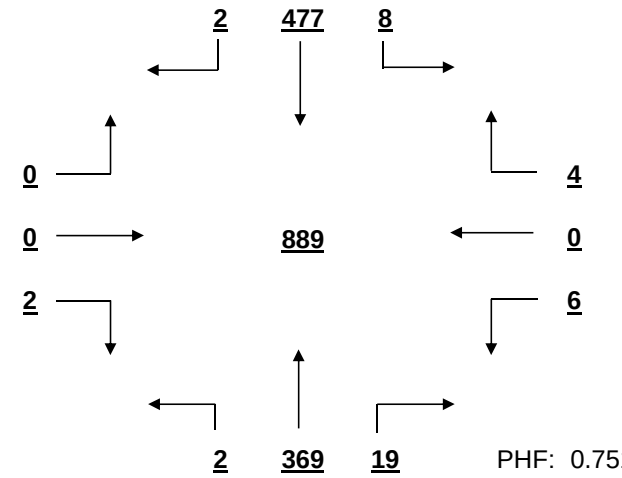

PHF: 0.751

SIGNAL WARRANT ANALYSIS

Harbison Blvd AT Rooms 2 Go-Pier 1 DW's Date: 11/21/2016

Minor Street Volume, percent of total = 13.2%
Percent of Left Turns from Minor Street = = 40.3%
Percent of Right Turns from Minor Street = 53.3%
Percent of Minor Street Right Turns to Remove from Warrant Analysis = 0%
WARRANT BASIS = **100%**

Warrant No. 1 - Vehicular Volume is met

Condition A - Minimum Vehicular Volume is met

Average Major Street % of Warrant				Average Minor Street % of Warrant			
1716.8	/ 600	=	286%	196.6	/ 150	=	131%

Hourly percent of warrant

	7:00 - 8:00	8:00 - 9:00	9:00 - 10:00	10:00 - 11:00	11:00 - 12:00	12:00 - 13:00	13:00 - 14:00	14:00 - 15:00	15:00 - 16:00	16:00 - 17:00	17:00 - 18:00	18:00 - 19:00
Major St.	146%	153%	202%	265%	303%	388%	370%	343%	306%	330%	328%	300%
Minor St.	7%	13%	50%	97%	145%	201%	237%	195%	156%	166%	156%	149%

Condition B - Interruption to Continuous Traffic is met

Average Major Street % of Warrant				Average Minor Street % of Warrant			
1716.8	/ 900	=	191%	196.6	/ 75	=	262%

Hourly percent of warrant

	7:00 - 8:00	8:00 - 9:00	9:00 - 10:00	10:00 - 11:00	11:00 - 12:00	12:00 - 13:00	13:00 - 14:00	14:00 - 15:00	15:00 - 16:00	16:00 - 17:00	17:00 - 18:00	18:00 - 19:00
Major St.	97%	102%	135%	176%	202%	259%	246%	228%	204%	220%	219%	200%
Minor St.	13%	27%	100%	195%	291%	401%	473%	391%	312%	332%	312%	299%

80% Combination of Conditions A & B is met

Warrant No. 2 - Four Hour Vehicular Volume is met

Hourly percent of warrant

	7:00 - 8:00	8:00 - 9:00	9:00 - 10:00	10:00 - 11:00	11:00 - 12:00	12:00 - 13:00	13:00 - 14:00	14:00 - 15:00	15:00 - 16:00	16:00 - 17:00	17:00 - 18:00	18:00 - 19:00
Minor St.	6%	12%	74%	183%	273%	376%	444%	366%	293%	311%	293%	280%

Warrant No. 3 - Peak Hour is met

Overall Peak Hour: 12:30 - 13:30 — Percent of warrant — Minor St. 358%

Higher Volume Side Street Peak Hour: 12:45 - 13:45 — Percent of warrant — Minor St. 371%

Warrant No. 4 - Pedestrian Volume. Pedestrian volume shown are minumum volumes assuming heavy major street traffic. If these volumes are met, warrant 4 requires further engineering analysis

S

Minimum 4 hour ped. volume crossing major street: 107

Minimum peak hour ped. volume crossing major street: 133

Number of pedestrians crossing major street

	7:00 - 8:00	8:00 - 9:00	9:00 - 10:00	10:00 - 11:00	11:00 - 12:00	12:00 - 13:00	13:00 - 14:00	14:00 - 15:00	15:00 - 16:00	16:00 - 17:00	17:00 - 18:00	18:00 - 19:00
Major t.	0	0	0	0	0	0	0	0	0	0	0	0

Warrant No. 7 - Crash Experience (Requires 3 criteria analysis by engineering)

Total Number: 0 From: 1/1/2005 to 1/1/2008

Accident Rate: 0.00 per million entering vehicles

Types of Accidents	No.	/	Avg.		No.	/	Avg.
Right Angle	0	/	0.0	Rear End	0	/	0.0
Lost Control	0	/	0.0	Side Swipe	0	/	0.0
Left Turn	0	/	0.0	Other	0	/	0.0

SOUTH CAROLINA DEPARTMENT OF TRANSPORTATION
DISTRICT 1
TRAFFIC ENGINEERING

County: Richland City: Columbia Date: 11/21/2016

Major Rt: Harbison Blvd * Not on State System Minor Rt: Bower Pkwy-Shopping Center * Not on State System

Day of Week: Monday Weather: Clear Office: Short Counts JMS

Type of Control: Signal Speed Limit (major st) 35

Direction of Minor Street: E-W Intersection ADT - 28380 (Calc)

Number of Lanes (major st)* 2 Number of Lanes (minor st)* 2

* Each Direction

INTERSECTION VOLUME SUMMARY

	From N Harbison Blvd				From S Harbison Blvd				From E Bower Pkwy-Shoppin				From W Bower Pkwy-Shoppin				Total	Total
	LT	STR	RT	TOT	LT	STR	RT	TOT	LT	STR	RT	TOT	LT	STR	RT	TOT	Vol	Peds
7:00 - 7:15	17	75	0	92	0	63	15	78	10	0	8	18	0	0	0	0	188	0
7:15 - 7:30	11	89	0	100	0	82	23	105	6	0	7	13	0	0	0	0	218	0
7:30 - 7:45	16	112	0	128	0	92	27	119	9	1	6	16	0	0	0	0	263	0
7:45 - 8:00	18	125	0	143	1	107	41	149	26	0	18	44	0	0	1	1	337	0
8:00 - 8:15	17	119	0	136	0	96	29	125	14	0	6	20	0	0	1	1	282	0
8:15 - 8:30	22	92	0	114	0	92	23	115	12	0	10	22	0	0	0	0	251	0
8:30 - 8:45	23	76	0	99	2	75	33	110	26	1	13	40	0	0	0	0	249	0
8:45 - 9:00	16	102	0	118	0	82	32	114	20	1	16	37	0	0	0	0	269	0
9:00 - 9:15	35	88	3	126	0	103	24	127	22	0	17	39	1	0	0	1	293	0
9:15 - 9:30	32	94	0	126	4	104	25	133	22	0	19	41	0	0	0	0	300	0
9:30 - 9:45	37	104	0	141	0	126	41	167	19	0	27	46	4	0	1	5	359	0
9:45 - 10:00	40	114	1	155	0	117	47	164	19	2	26	47	3	1	1	5	371	0
10:00 - 10:15	28	119	3	150	2	129	37	168	32	1	35	68	3	1	1	5	391	0
10:15 - 10:30	45	113	3	161	0	153	48	201	31	4	46	81	5	1	3	9	452	0
10:30 - 10:45	47	132	4	183	3	136	46	185	65	1	46	112	3	1	1	5	485	0
10:45 - 11:00	65	154	1	220	0	158	46	204	38	0	52	90	1	2	0	3	517	0
11:00 - 11:15	60	139	3	202	0	0	37	37	39	0	50	89	4	1	2	7	335	0
11:15 - 11:30	57	157	1	215	1	177	48	226	46	2	59	107	6	1	2	9	557	0
11:30 - 11:45	65	174	4	243	3	169	50	222	70	4	63	137	4	3	0	7	609	0
11:45 - 12:00	71	196	4	271	0	167	42	209	66	0	69	135	3	0	2	5	620	0
12:00 - 12:15	78	215	1	294	1	202	59	262	49	15	52	116	3	3	0	6	678	0
12:15 - 12:30	68	212	2	282	0	180	69	249	72	6	66	144	2	3	2	7	682	1
12:30 - 12:45	85	193	4	282	2	204	74	280	72	1	90	163	3	0	3	6	731	0
12:45 - 13:00	87	218	5	310	1	193	61	255	60	2	71	133	8	0	0	8	706	0
13:00 - 13:15	93	214	4	311	1	170	52	223	80	3	90	173	4	3	5	12	719	0
13:15 - 13:30	66	201	2	269	2	182	45	229	61	2	74	137	7	0	0	7	642	0
13:30 - 13:45	64	204	9	277	0	198	59	257	76	2	63	141	2	0	0	2	677	2
13:45 - 14:00	62	220	5	287	1	169	57	227	83	0	50	133	6	0	0	6	653	0
14:00 - 14:15	51	196	5	252	0	189	55	244	85	2	59	146	7	1	0	8	650	0
14:15 - 14:30	65	183	3	251	0	166	53	219	56	1	62	119	1	1	2	4	593	0
14:30 - 14:45	63	166	5	234	2	165	42	209	76	0	58	134	3	1	2	6	583	0
14:45 - 15:00	59	192	6	257	3	179	46	228	56	1	62	119	4	1	3	8	612	0
15:00 - 15:15	76	194	1	271	2	161	49	212	48	1	71	120	5	0	3	8	611	0
15:15 - 15:30	38	148	0	186	2	172	43	217	78	3	52	133	7	0	1	8	544	0
15:30 - 15:45	51	175	2	228	0	159	31	190	60	2	49	111	3	2	5	10	539	0
15:45 - 16:00	54	155	2	211	2	170	54	226	78	1	63	142	4	4	1	9	588	0
16:00 - 16:15	56	187	4	247	0	173	42	215	74	2	47	123	4	2	3	9	594	3
16:15 - 16:30	63	164	1	228	2	172	50	224	93	2	52	147	4	0	6	10	609	2
16:30 - 16:45	64	217	1	282	1	173	46	220	68	3	61	132	2	2	3	7	641	1
16:45 - 17:00	52	238	6	296	0	167	48	215	56	1	43	100	1	0	2	3	614	2
17:00 - 17:15	51	239	4	294	2	186	55	243	86	0	59	145	6	0	1	7	689	0
17:15 - 17:30	60	219	1	280	1	174	44	219	65	4	62	131	3	2	3	8	638	0
17:30 - 17:45	57	157	2	216	1	164	51	216	72	0	56	128	4	1	2	7	567	0
17:45 - 18:00	78	189	1	268	1	172	61	234	64	2	42	108	3	1	2	6	616	0
18:00 - 18:15	50	181	5	236	2	176	53	231	77	0	59	136	1	0	3	4	607	0
18:15 - 18:30	51	214	1	266	2	145	47	194	64	0	62	126	3	2	0	5	591	0
18:30 - 18:45	61	213	2	276	0	149	44	193	77	2	38	117	4	3	1	8	594	0
18:45 - 19:00	55	192	0	247	0	110	39	149	75	1	61	137	2	2	0	4	537	0
TOTAL	2480	7870	111	10461	47	7048	2143	9238	2553	76	2267	4896	143	45	68	256	24851	11
Trucks	28	45	0	73	0	36	5	41	16	0	22	38	0	0	2	2	154	0.6%
School Buses	0	30	0	30	0	10	4	14	14	0	3	17	0	0	0	0	61	0.2%

TOTAL AND PEAK HOUR VOLUME DIAGRAMS

Harbison Blvd AT Bower Pkwy-Shopping Center Date: 11/21/2016

12.0 HOUR TOTAL VOLUME
FROM 7:00 TO 15:00

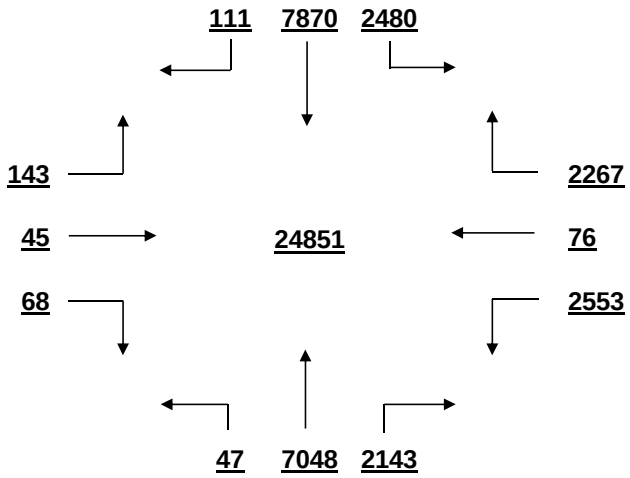

OVERALL PEAK HOUR VOLUME
FROM 12:15 TO 13:15

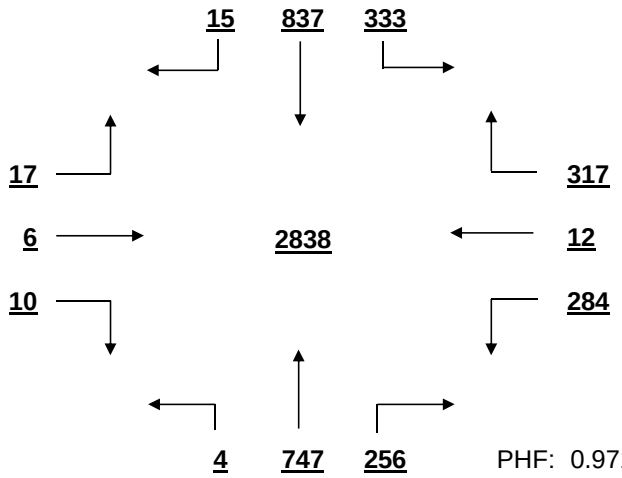

PHF: 0.971

AM PEAK HOUR VOLUME (0:00-10:45)
FROM 9:45 TO 10:45

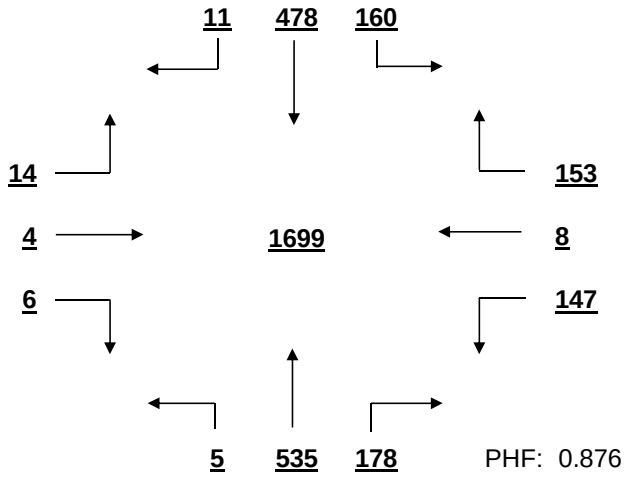

PHF: 0.876

PM PEAK HOUR VOLUME (14:15-23:45)
FROM 16:30 TO 17:30

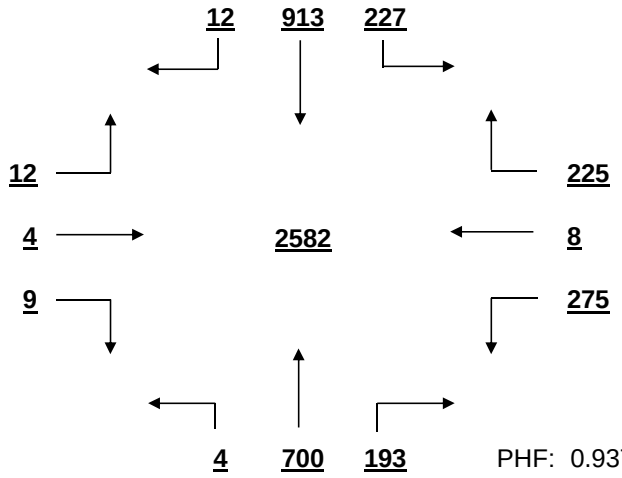

PHF: 0.937

MID-DAY PEAK HOUR VOLUME (11:00-14:00)
FROM 12:15 TO 13:15

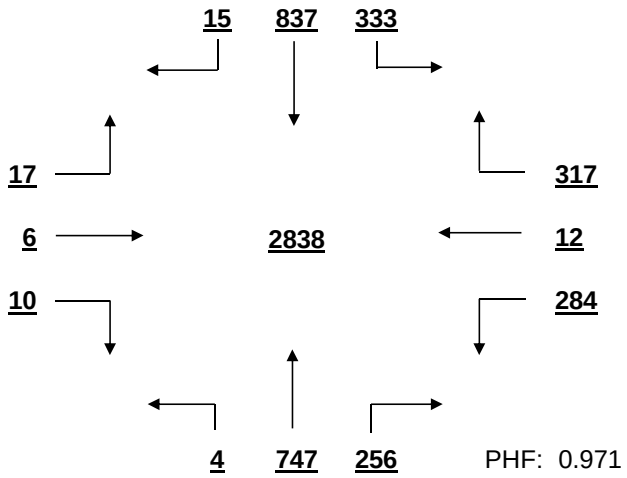

PHF: 0.971

OTHER HOUR VOLUME
FROM 7:00 TO 8:00

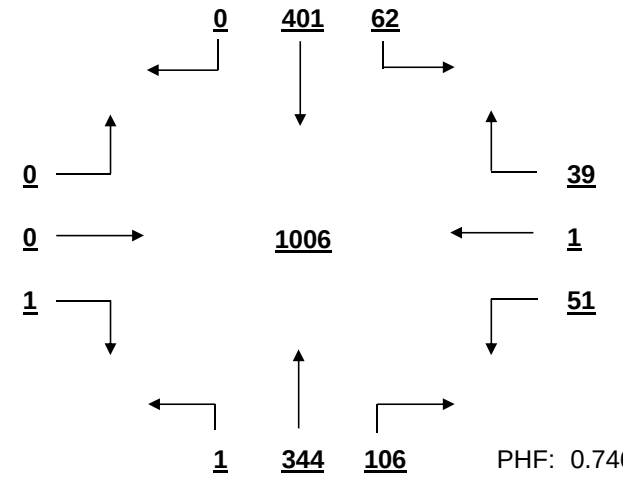

PHF: 0.746

SIGNAL WARRANT ANALYSIS

Harbison Blvd AT Bower Pkwy-Shopping Center Date: 11/21/2016

Minor Street Volume, percent of total = 20.7%
Percent of Left Turns from Minor Street = 52.3%
Percent of Right Turns from Minor Street = 45.3%
Percent of Minor Street Right Turns to Remove from Warrant Analysis = 0%
WARRANT BASIS = **100%**

Warrant No. 1 - Vehicular Volume is met

Condition A - Minimum Vehicular Volume is met

Average Major Street % of Warrant				Average Minor Street % of Warrant			
1641.6	/ 600	=	274%	408.0	/ 200	=	204%

Hourly percent of warrant

	7:00 - 8:00	8:00 - 9:00	9:00 - 10:00	10:00 - 11:00	11:00 - 12:00	12:00 - 13:00	13:00 - 14:00	14:00 - 15:00	15:00 - 16:00	16:00 - 17:00	17:00 - 18:00	18:00 - 19:00
Major St.	152%	155%	190%	245%	271%	369%	347%	316%	290%	321%	328%	299%
Minor St.	46%	60%	87%	176%	234%	278%	292%	259%	253%	251%	256%	258%

Condition B - Interruption to Continuous Traffic is met

Average Major Street % of Warrant				Average Minor Street % of Warrant			
1641.6	/ 900	=	182%	408.0	/ 100	=	408%

Hourly percent of warrant

	7:00 - 8:00	8:00 - 9:00	9:00 - 10:00	10:00 - 11:00	11:00 - 12:00	12:00 - 13:00	13:00 - 14:00	14:00 - 15:00	15:00 - 16:00	16:00 - 17:00	17:00 - 18:00	18:00 - 19:00
Major St.	102%	103%	127%	164%	181%	246%	231%	210%	193%	214%	219%	199%
Minor St.	91%	119%	173%	351%	468%	556%	584%	518%	506%	502%	512%	516%

80% Combination of Conditions A & B is met

Warrant No. 2 - Four Hour Vehicular Volume is met

Hourly percent of warrant

	7:00 - 8:00	8:00 - 9:00	9:00 - 10:00	10:00 - 11:00	11:00 - 12:00	12:00 - 13:00	13:00 - 14:00	14:00 - 15:00	15:00 - 16:00	16:00 - 17:00	17:00 - 18:00	18:00 - 19:00
Minor St.	40%	54%	116%	305%	407%	483%	508%	450%	440%	437%	445%	449%

Warrant No. 3 - Peak Hour is met

Percent of warrant
Overall Peak Hour: 12:15 - 13:15
Minor St. 409%

Percent of warrant
Higher Volume Side Street Peak Hour: 12:15 - 13:15
Minor St. 409%

Warrant No. 4 - Pedestrian Volume. Pedestrian volume shown are minumum volumes assuming heavy major street traffic. If these volumes are met, warrant 4 requires further engineering analysis

S

Minimum 4 hour ped. volume crossing major street: 107

Minimum peak hour ped. volume crossing major street: 133

Number of pedestrians crossing major street

	7:00 - 8:00	8:00 - 9:00	9:00 - 10:00	10:00 - 11:00	11:00 - 12:00	12:00 - 13:00	13:00 - 14:00	14:00 - 15:00	15:00 - 16:00	16:00 - 17:00	17:00 - 18:00	18:00 - 19:00
Major t.	0	0	0	0	0	1	0	0	0	0	0	0

Warrant No. 7 - Crash Experience (Requires 3 criteria analysis by engineering)

Total Number: 0 From: 1/1/2005 to 1/1/2008
Accident Rate: 0.00 per million entering vehicles

Types of Accidents	No.	/	Avg.		No.	/	Avg.
Right Angle	0	/	0.0	Rear End	0	/	0.0
Lost Control	0	/	0.0	Side Swipe	0	/	0.0
Left Turn	0	/	0.0	Other	0	/	0.0

SOUTH CAROLINA DEPARTMENT OF TRANSPORTATION
DISTRICT 1
TRAFFIC ENGINEERING

County: Richland City: Columbia Date: 11/21/2016

Major Rt: St. Andrews Rd * Not on State System Minor Rt: Harbison Blvd-Emory Ln * Not on State System

Day of Week: Monday Weather: Clear Office: Short Counts JMS

Type of Control: Signal Speed Limit (major st) 40

Direction of Minor Street: E-W Intersection ADT - 32050 (Calc)

Number of Lanes (major st)* 2 Number of Lanes (minor st)* 2

* Each Direction

INTERSECTION VOLUME SUMMARY

	From N St. Andrews Rd				From S St. Andrews Rd				From E Harbison Blvd-Emor				From W Harbison Blvd-Emor				Total	Total
	LT	STR	RT	TOT	LT	STR	RT	TOT	LT	STR	RT	TOT	LT	STR	RT	TOT	Vol	Peds
7:00 - 7:15	37	119	0	156	2	52	26	80	15	7	42	64	2	21	3	26	326	0
7:15 - 7:30	58	183	2	243	1	76	37	114	38	23	57	118	4	28	5	37	512	0
7:30 - 7:45	86	242	4	332	4	100	19	123	39	15	75	129	5	47	11	63	647	0
7:45 - 8:00	75	198	5	278	5	125	29	159	27	17	109	153	13	52	21	86	676	1
8:00 - 8:15	68	197	10	275	2	113	13	128	44	22	94	160	30	49	21	100	663	0
8:15 - 8:30	86	209	4	299	2	59	21	82	44	8	59	111	5	33	6	44	536	0
8:30 - 8:45	55	132	3	190	0	53	34	87	37	16	37	90	6	35	5	46	413	0
8:45 - 9:00	73	180	4	257	0	65	31	96	41	7	47	95	7	21	3	31	479	1
9:00 - 9:15	73	118	0	191	2	74	33	109	47	13	39	99	2	25	1	28	427	0
9:15 - 9:30	73	105	0	178	2	90	43	135	33	11	40	84	1	28	4	33	430	0
9:30 - 9:45	73	108	0	181	0	92	60	152	27	18	51	96	10	44	0	54	483	0
9:45 - 10:00	78	105	5	188	3	77	63	143	31	22	62	115	2	40	0	42	488	0
10:00 - 10:15	83	98	7	188	0	80	68	148	30	17	69	116	1	36	2	39	491	0
10:15 - 10:30	80	102	2	184	0	80	58	138	41	19	71	131	1	37	2	40	493	0
10:30 - 10:45	92	112	2	206	0	77	56	133	50	24	84	158	0	42	3	45	542	0
10:45 - 11:00	94	109	3	206	2	100	69	171	35	21	84	140	1	33	1	35	552	0
11:00 - 11:15	102	107	3	212	1	0	57	58	45	24	80	149	3	27	2	32	451	0
11:15 - 11:30	91	107	2	200	3	79	59	141	39	31	92	162	1	43	4	48	551	1
11:30 - 11:45	98	100	5	203	0	103	82	185	60	39	83	182	3	35	4	42	612	0
11:45 - 12:00	113	147	4	264	2	115	85	202	72	33	112	217	3	22	7	32	715	0
12:00 - 12:15	109	129	5	243	5	113	100	218	63	41	114	218	3	38	2	43	722	0
12:15 - 12:30	94	113	3	210	4	116	84	204	80	43	112	235	3	47	5	55	704	0
12:30 - 12:45	103	125	4	232	3	93	84	180	78	37	126	241	5	39	7	51	704	0
12:45 - 13:00	100	129	5	234	2	96	74	172	65	42	115	222	4	43	3	50	678	0
13:00 - 13:15	87	126	1	214	1	97	79	177	69	35	129	233	3	29	1	33	657	0
13:15 - 13:30	83	112	9	204	1	94	66	161	77	33	114	224	0	38	2	40	629	0
13:30 - 13:45	87	127	0	214	1	129	87	217	67	43	125	235	3	53	1	57	723	0
13:45 - 14:00	90	105	6	201	2	116	76	194	72	53	140	265	2	44	2	48	708	0
14:00 - 14:15	102	118	4	224	0	96	76	172	75	53	142	270	2	45	1	48	714	0
14:15 - 14:30	78	100	3	181	1	112	72	185	75	44	125	244	5	41	0	46	656	0
14:30 - 14:45	102	137	3	242	4	116	76	196	48	45	101	194	3	20	0	23	655	1
14:45 - 15:00	98	140	2	240	4	108	73	185	72	64	110	246	5	36	1	42	713	1
15:00 - 15:15	80	92	5	177	5	146	84	235	53	30	115	198	1	37	2	40	650	0
15:15 - 15:30	82	110	0	192	0	172	86	258	54	50	97	201	2	33	3	38	689	1
15:30 - 15:45	75	139	8	222	6	178	87	271	64	44	132	240	5	30	7	42	775	0
15:45 - 16:00	100	211	20	331	10	148	86	244	49	33	124	206	13	48	10	71	852	3
16:00 - 16:15	86	138	6	230	7	167	94	268	67	62	119	248	10	44	8	62	808	5
16:15 - 16:30	89	108	1	198	4	181	93	278	56	57	126	239	7	44	4	55	770	4
16:30 - 16:45	84	135	4	223	2	192	104	298	57	41	113	211	4	32	3	39	771	0
16:45 - 17:00	75	179	4	258	7	147	76	230	47	46	122	215	5	34	3	42	745	1
17:00 - 17:15	85	152	8	245	2	150	78	230	60	68	130	258	2	38	4	44	777	0
17:15 - 17:30	84	143	3	230	3	186	92	281	53	47	122	222	2	37	1	40	773	0
17:30 - 17:45	80	115	1	196	1	167	102	270	41	37	124	202	1	41	4	46	714	0
17:45 - 18:00	75	131	1	207	2	150	98	250	49	39	138	226	3	38	2	43	726	0
18:00 - 18:15	92	143	2	237	11	127	69	207	56	49	136	241	6	49	3	58	743	0
18:15 - 18:30	43	113	1	157	7	149	71	227	52	56	121	229	3	32	8	43	656	0
18:30 - 18:45	66	97	5	168	6	92	65	163	55	39	125	219	0	39	2	41	591	0
18:45 - 19:00	55	71	2	128	2	81	47	130	39	36	109	184	2	26	1	29	471	0
TOTAL	3972	6316	181	10469	134	5329	3222	8685	2488	1654	4793	8935	204	1773	195	2172	30261	19
Trucks	16	24	1	41	3	44	16	63	4	8	40	52	1	12	0	13	169	0.6%
School Buses	13	34	6	53	4	29	6	39	20	16	39	75	56	6	1	63	230	0.8%

TOTAL AND PEAK HOUR VOLUME DIAGRAMS

St. Andrews Rd AT Harbison Blvd-Emory Ln Date: 11/21/2016

12.0 HOUR TOTAL VOLUME
FROM 7:00 TO 15:00

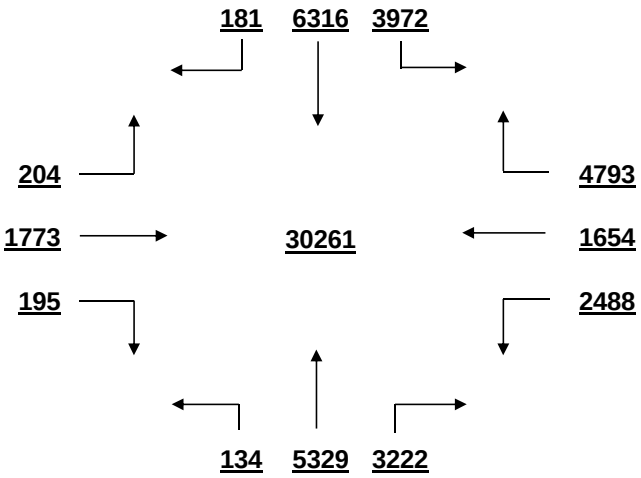

OVERALL PEAK HOUR VOLUME
FROM 15:30 TO 16:30

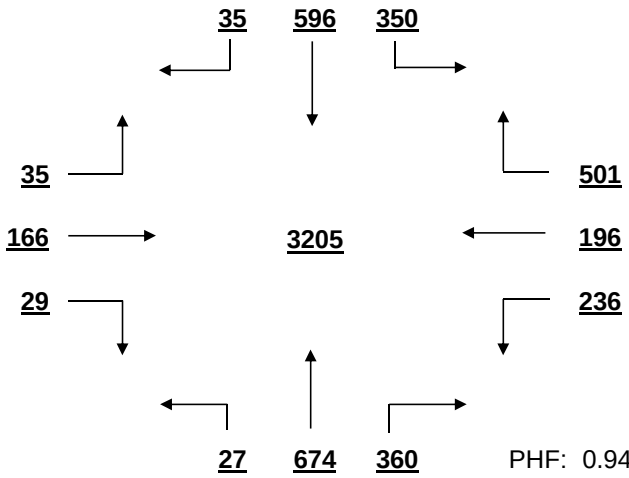

PHF: 0.940

AM PEAK HOUR VOLUME (0:00-10:45)
FROM 7:30 TO 8:30

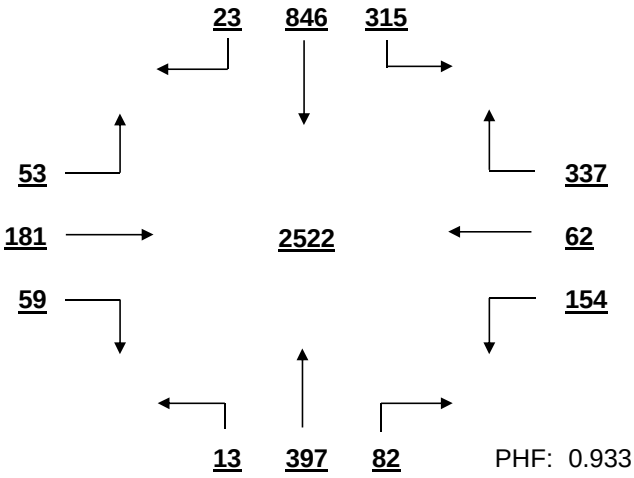

PHF: 0.933

PM PEAK HOUR VOLUME (14:15-23:45)
FROM 15:30 TO 16:30

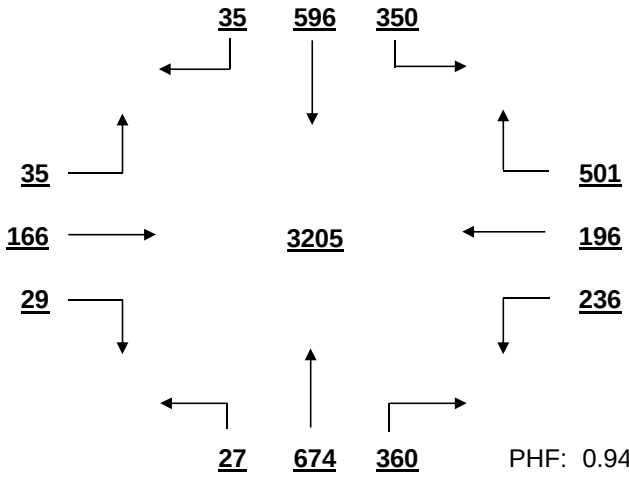

PHF: 0.940

MID-DAY PEAK HOUR VOLUME (11:00-14:00)
FROM 11:45 TO 12:45

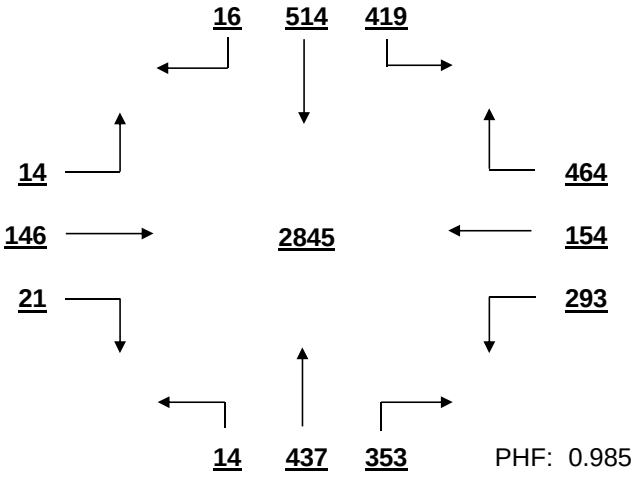

PHF: 0.985

OTHER HOUR VOLUME
FROM 7:00 TO 8:00

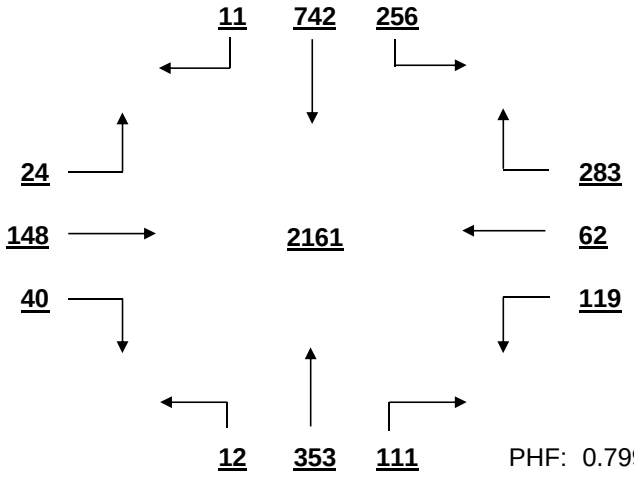

PHF: 0.799

SIGNAL WARRANT ANALYSIS

St. Andrews Rd AT Harbison Blvd-Emory Ln Date: 11/21/2016

Minor Street Volume, percent of total = 36.7%
Percent of Left Turns from Minor Street = = 24.2%
Percent of Right Turns from Minor Street = 44.9%
Percent of Minor Street Right Turns to Remove from Warrant Analysis = 0%
WARRANT BASIS = **100%**

Warrant No. 1 - Vehicular Volume is met

Condition A - Minimum Vehicular Volume is met

Average Major Street % of Warrant				Average Minor Street % of Warrant			
1596.2	/ 600	=	266%	744.6	/ 200	=	372%

Hourly percent of warrant

	7:00 - 8:00	8:00 - 9:00	9:00 - 10:00	10:00 - 11:00	11:00 - 12:00	12:00 - 13:00	13:00 - 14:00	14:00 - 15:00	15:00 - 16:00	16:00 - 17:00	17:00 - 18:00	18:00 - 19:00
Major St.	248%	236%	213%	229%	244%	282%	264%	271%	322%	331%	318%	236%
Minor St.	232%	228%	197%	273%	355%	458%	479%	477%	423%	457%	454%	437%

Condition B - Interruption to Continuous Traffic is met

Average Major Street % of Warrant				Average Minor Street % of Warrant			
1596.2	/ 900	=	177%	744.6	/ 100	=	745%

Hourly percent of warrant

	7:00 - 8:00	8:00 - 9:00	9:00 - 10:00	10:00 - 11:00	11:00 - 12:00	12:00 - 13:00	13:00 - 14:00	14:00 - 15:00	15:00 - 16:00	16:00 - 17:00	17:00 - 18:00	18:00 - 19:00
Major St.	165%	157%	142%	153%	163%	188%	176%	181%	214%	220%	212%	157%
Minor St.	464%	456%	394%	545%	710%	916%	957%	954%	845%	913%	908%	873%

80% Combination of Conditions A & B is met

Warrant No. 2 - Four Hour Vehicular Volume is met

Hourly percent of warrant

	7:00 - 8:00	8:00 - 9:00	9:00 - 10:00	10:00 - 11:00	11:00 - 12:00	12:00 - 13:00	13:00 - 14:00	14:00 - 15:00	15:00 - 16:00	16:00 - 17:00	17:00 - 18:00	18:00 - 19:00
Minor St.	403%	397%	336%	474%	617%	797%	832%	830%	735%	794%	790%	759%

Warrant No. 3 - Peak Hour is met

Overall Peak Hour: 15:30 - 16:30 — Percent of warrant
Minor St. 622%

Higher Volume Side Street Peak Hour: 13:30 - 14:30 — Percent of warrant
Minor St. 611%

Warrant No. 4 - Pedestrian Volume. Pedestrian volume shown are minumum volumes assuming heavy major street traffic. If these volumes are met, warrant 4 requires further engineering analysis

S

Minimum 4 hour ped. volume crossing major street: 107

Minimum peak hour ped. volume crossing major street: 133

Number of pedestrians crossing major street

	7:00 - 8:00	8:00 - 9:00	9:00 - 10:00	10:00 - 11:00	11:00 - 12:00	12:00 - 13:00	13:00 - 14:00	14:00 - 15:00	15:00 - 16:00	16:00 - 17:00	17:00 - 18:00	18:00 - 19:00
Major t.	0	0	0	0	0	0	0	1	0	0	0	0

Warrant No. 7 - Crash Experience (Requires 3 criteria analysis by engineering)

Total Number: 0 From: 1/1/2005 to 1/1/2008
Accident Rate: 0.00 per million entering vehicles

Types of Accidents	No.	/	Avg.		No.	/	Avg.
Right Angle	0	/	0.0	Rear End	0	/	0.0
Lost Control	0	/	0.0	Side Swipe	0	/	0.0
Left Turn	0	/	0.0	Other	0	/	0.0

SOUTH CAROLINA DEPARTMENT OF TRANSPORTATION
DISTRICT 1
TRAFFIC ENGINEERING

County: Richland City: Columbia Date: 11/21/2016

Major Rt: Bower Pkwy * Not on State System Minor Rt: Park Terrace Dr * Not on State System

Day of Week: Monday Weather: Clear Office: Short Counts JMS

Type of Control: Signal Speed Limit (major st) 35

Direction of Minor Street: N-S Intersection ADT - 17080 (Calc)

Number of Lanes (major st)* 1 Number of Lanes (minor st)* 1 * Each Direction

INTERSECTION VOLUME SUMMARY

	From N Park Terrace Dr				From S Park Terrace Dr				From E Bower Pkwy				From W Bower Pkwy				Total	Total
	LT	STR	RT	TOT	LT	STR	RT	TOT	LT	STR	RT	TOT	LT	STR	RT	TOT	Vol	Peds
7:00 - 7:15	14	0	6	20	0	0	0	0	2	17	13	32	3	10	0	13	65	0
7:15 - 7:30	19	0	0	19	0	2	1	3	1	27	20	48	4	18	0	22	92	0
7:30 - 7:45	36	0	1	37	0	0	0	0	0	34	22	56	2	25	0	27	120	0
7:45 - 8:00	44	1	8	53	1	0	0	1	0	65	24	89	2	30	0	32	175	0
8:00 - 8:15	34	1	4	39	0	1	2	3	1	42	19	62	3	23	0	26	130	0
8:15 - 8:30	31	1	6	38	0	1	0	1	0	29	13	42	5	24	0	29	110	0
8:30 - 8:45	32	1	14	47	0	0	0	0	1	35	21	57	5	30	0	35	139	0
8:45 - 9:00	22	0	15	37	0	0	0	0	4	64	24	92	9	29	0	38	167	0
9:00 - 9:15	17	1	17	35	0	0	2	2	3	58	30	91	18	31	2	51	179	0
9:15 - 9:30	16	2	11	29	0	1	0	1	3	58	21	82	12	18	0	30	142	1
9:30 - 9:45	17	0	13	30	0	0	1	1	2	49	35	86	15	33	1	49	166	0
9:45 - 10:00	28	1	19	48	3	0	1	4	3	80	41	124	27	39	0	66	242	0
10:00 - 10:15	21	0	23	44	0	1	0	1	2	54	31	87	21	37	0	58	190	0
10:15 - 10:30	24	0	23	47	0	1	0	1	3	70	42	115	28	47	0	75	238	0
10:30 - 10:45	38	1	29	68	1	0	0	1	0	85	38	123	31	54	0	85	277	0
10:45 - 11:00	37	0	30	67	0	2	0	2	2	73	46	121	32	38	1	71	261	0
11:00 - 11:15	26	0	32	58	0	3	0	3	1	90	52	143	31	45	1	77	281	0
11:15 - 11:30	46	0	37	83	0	0	1	1	4	87	45	136	31	52	0	83	303	0
11:30 - 11:45	24	2	48	74	1	3	2	6	1	95	49	145	33	60	1	94	319	0
11:45 - 12:00	47	1	70	118	1	1	0	2	2	116	47	165	30	68	1	99	384	0
12:00 - 12:15	46	2	50	98	0	0	5	5	4	110	55	169	28	77	1	106	378	0
12:15 - 12:30	44	0	49	93	2	1	3	6	2	134	56	192	48	80	1	129	420	0
12:30 - 12:45	55	2	53	110	2	1	3	6	2	113	58	173	34	94	2	130	419	0
12:45 - 13:00	72	2	62	136	0	5	5	10	1	111	59	171	45	110	0	155	472	0
13:00 - 13:15	62	2	46	110	0	3	1	4	1	84	47	132	50	101	0	151	397	0
13:15 - 13:30	56	0	46	102	0	5	2	7	0	88	43	131	52	86	2	140	380	0
13:30 - 13:45	54	2	42	98	0	1	3	4	0	73	47	120	43	68	2	113	335	0
13:45 - 14:00	45	0	60	105	2	1	1	4	3	93	48	144	52	99	0	151	404	0
14:00 - 14:15	50	1	41	92	0	2	2	4	0	83	35	118	52	82	0	134	348	0
14:15 - 14:30	52	0	50	102	0	0	4	4	2	97	60	159	36	105	2	143	408	0
14:30 - 14:45	64	0	34	98	0	0	1	1	0	103	55	158	38	106	0	144	401	0
14:45 - 15:00	58	1	51	110	0	0	1	1	1	83	47	131	61	78	1	140	382	0
15:00 - 15:15	50	0	29	79	1	1	2	4	1	76	44	121	38	75	2	115	319	0
15:15 - 15:30	41	3	37	81	0	1	1	2	2	89	47	138	40	86	0	126	347	0
15:30 - 15:45	46	2	40	88	0	0	1	1	6	55	41	102	33	57	0	90	281	0
15:45 - 16:00	56	3	23	82	0	4	2	6	1	85	41	127	29	61	0	90	305	0
16:00 - 16:15	33	0	14	47	0	0	3	3	3	74	41	118	29	48	1	78	246	0
16:15 - 16:30	49	0	44	93	0	1	1	2	6	105	43	154	36	63	1	100	349	0
16:30 - 16:45	32	0	30	62	0	0	1	1	1	96	49	146	35	76	1	112	321	0
16:45 - 17:00	37	0	11	48	0	0	3	3	0	90	34	124	36	51	0	87	262	0
17:00 - 17:15	42	2	25	69	0	2	4	6	3	88	41	132	42	71	1	114	321	0
17:15 - 17:30	37	6	45	88	0	1	0	1	7	104	52	163	29	68	0	97	349	0
17:30 - 17:45	63	7	40	110	0	2	2	4	3	108	48	159	31	69	0	100	373	0
17:45 - 18:00	43	4	46	93	1	2	2	5	3	95	46	144	29	83	2	114	356	0
18:00 - 18:15	39	2	33	74	0	3	4	7	7	84	35	126	30	49	2	81	288	0
18:15 - 18:30	47	5	38	90	0	0	5	5	8	96	42	146	39	49	1	89	330	0
18:30 - 18:45	38	6	40	84	3	2	2	7	5	98	33	136	33	77	1	111	338	0
18:45 - 19:00	38	5	35	78	0	3	6	9	3	72	38	113	22	48	3	73	273	0
TOTAL	1922	69	1520	3511	18	57	80	155	110	3815	1918	5843	1412	2828	33	4273	13782	1
Trucks	7	1	1	9	0	1	0	1	1	11	10	22	2	16	0	18	50	0.4%
School Buses	4	0	0	4	0	0	0	0	0	13	15	28	0	5	0	5	37	0.3%

TOTAL AND PEAK HOUR VOLUME DIAGRAMS

Bower Pkwy AT Park Terrace Dr Date: 11/21/2016

12.0 HOUR TOTAL VOLUME
FROM 7:00 TO 15:00

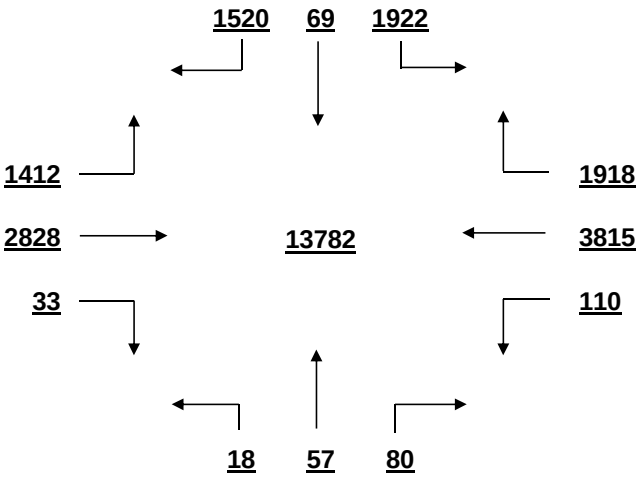

OVERALL PEAK HOUR VOLUME
FROM 12:15 TO 13:15

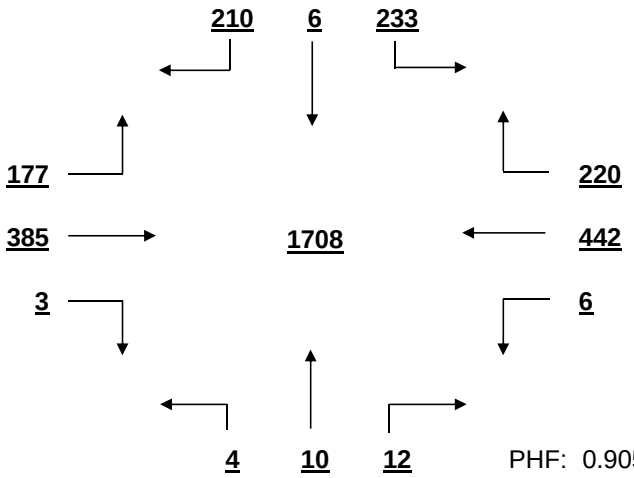

PHF: 0.905

AM PEAK HOUR VOLUME (0:00-10:45)
FROM 9:45 TO 10:45

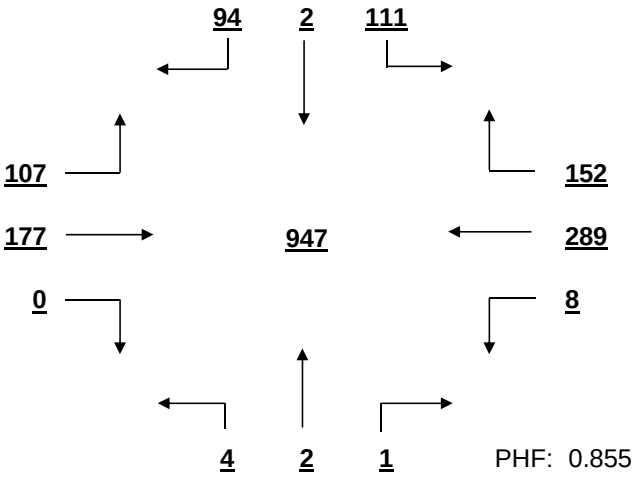

PHF: 0.855

PM PEAK HOUR VOLUME (14:15-23:45)
FROM 14:15 TO 15:15

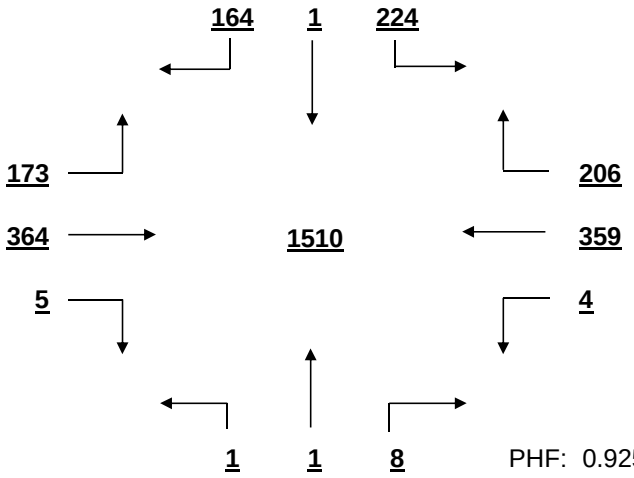

PHF: 0.925

MID-DAY PEAK HOUR VOLUME (11:00-14:00)
FROM 12:15 TO 13:15

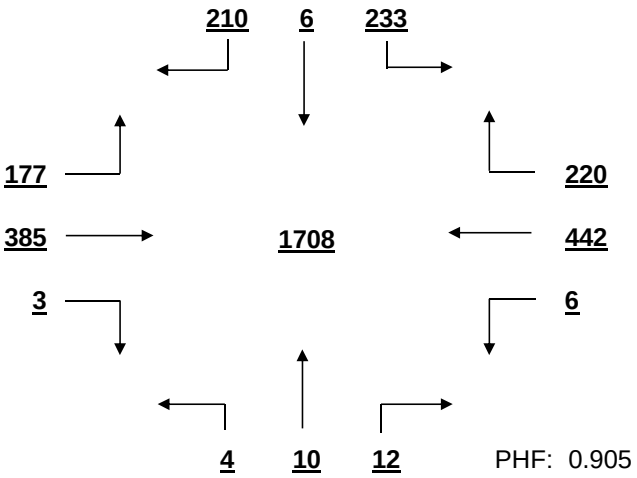

PHF: 0.905

OTHER HOUR VOLUME
FROM 7:00 TO 8:00

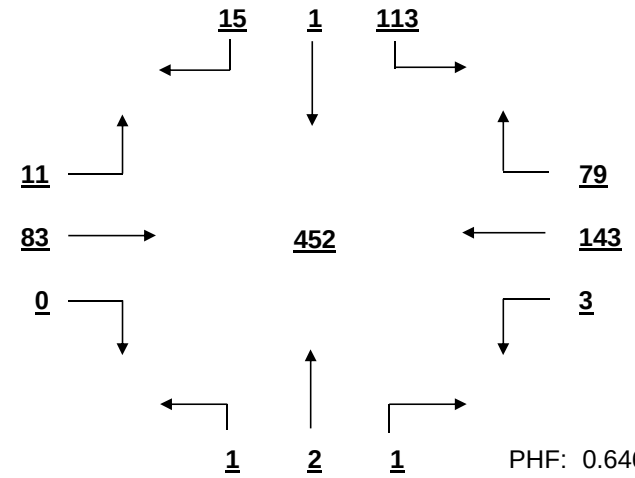

PHF: 0.646

SIGNAL WARRANT ANALYSIS

Bower Pkwy AT Park Terrace Dr Date: 11/21/2016

Minor Street Volume, percent of total = 26.6%
Percent of Left Turns from Minor Street = 52.9%
Percent of Right Turns from Minor Street = 43.6%
Percent of Minor Street Right Turns to Remove from Warrant Analysis = 0%
WARRANT BASIS = **100%**

Warrant No. 1 - Vehicular Volume is met

Condition A - Minimum Vehicular Volume is met

Average Major Street % of Warrant				Average Minor Street % of Warrant			
843.0	/ 500	=	169%	292.6	/ 150	=	195%

Hourly percent of warrant

	7:00-8:00	8:00-9:00	9:00-10:00	10:00-11:00	11:00-12:00	12:00-13:00	13:00-14:00	14:00-15:00	15:00-16:00	16:00-17:00	17:00-18:00	18:00-19:00
Major St.	64%	76%	116%	147%	188%	245%	216%	225%	182%	184%	205%	175%
Minor St.	86%	107%	95%	151%	222%	291%	277%	268%	220%	167%	240%	217%

Condition B - Interruption to Continuous Traffic is met

Average Major Street % of Warrant				Average Minor Street % of Warrant			
843.0	/ 750	=	112%	292.6	/ 75	=	390%

Hourly percent of warrant

	7:00-8:00	8:00-9:00	9:00-10:00	10:00-11:00	11:00-12:00	12:00-13:00	13:00-14:00	14:00-15:00	15:00-16:00	16:00-17:00	17:00-18:00	18:00-19:00
Major St.	43%	51%	77%	98%	126%	163%	144%	150%	121%	123%	136%	117%
Minor St.	172%	215%	189%	301%	444%	583%	553%	536%	440%	333%	480%	435%

80% Combination of Conditions A & B is met

Warrant No. 2 - Four Hour Vehicular Volume is met

Hourly percent of warrant

	7:00-8:00	8:00-9:00	9:00-10:00	10:00-11:00	11:00-12:00	12:00-13:00	13:00-14:00	14:00-15:00	15:00-16:00	16:00-17:00	17:00-18:00	18:00-19:00
Minor St.	37%	51%	63%	133%	299%	546%	496%	524%	277%	214%	382%	255%

Warrant No. 3 - Peak Hour is met

Overall Peak Hour: 12:15-13:15 — Percent of warrant
Minor St. 320%

Higher Volume Side Street Peak Hour: 12:30-13:30 — Percent of warrant
Minor St. 302%

Warrant No. 4 - Pedestrian Volume. Pedestrian volume shown are minumum volumes assuming heavy major street traffic. If these volumes are met, warrant 4 requires further engineering analysis

S

Minimum 4 hour ped. volume crossing major street: 107

Minimum peak hour ped. volume crossing major street: 133

Number of pedestrians crossing major street

	7:00-8:00	8:00-9:00	9:00-10:00	10:00-11:00	11:00-12:00	12:00-13:00	13:00-14:00	14:00-15:00	15:00-16:00	16:00-17:00	17:00-18:00	18:00-19:00
Major t.	0	0	0	0	0	0	0	0	0	0	0	0

Warrant No. 7 - Crash Experience (Requires 3 criteria analysis by engineering)

Total Number: 0 From: 1/1/2005 to 1/1/2008
Accident Rate: 0.00 per million entering vehicles

Types of Accidents	No.	/	Avg.		No.	/	Avg.
Right Angle	0	/	0.0	Rear End	0	/	0.0
Lost Control	0	/	0.0	Side Swipe	0	/	0.0
Left Turn	0	/	0.0	Other	0	/	0.0

SOUTH CAROLINA DEPARTMENT OF TRANSPORTATION
DISTRICT 1
TRAFFIC ENGINEERING

County: Richland City: Columbia Date: 11/22/2016

Major Rt: Bower Pkwy * Not on State System Minor Rt: Saturn Pkwy * Not on State System

Day of Week: Tuesday Weather: Clear Office: Short Counts JMS

Type of Control: Stop Sign Speed Limit (major st) 35

Direction of Minor Street: E-W Intersection ADT - 14560 (Calc)

Number of Lanes (major st)* 1 Number of Lanes (minor st)* 1

* Each Direction

INTERSECTION VOLUME SUMMARY

	From N Bower Pkwy				From S Bower Pkwy				From E Saturn Pkwy				From W Saturn Pkwy				Total	Total
	LT	STR	RT	TOT	LT	STR	RT	TOT	LT	STR	RT	TOT	LT	STR	RT	TOT	Vol	Peds
7:00 - 7:15	2	29	0	31	0	58	4	62	5	0	1	6	0	0	0	0	99	0
7:15 - 7:30	1	49	0	50	0	53	7	60	12	0	0	12	0	0	0	0	122	0
7:30 - 7:45	1	72	0	73	0	71	11	82	12	0	4	16	0	0	0	0	171	0
7:45 - 8:00	2	77	0	79	0	91	15	106	9	0	4	13	0	0	0	0	198	0
8:00 - 8:15	2	62	0	64	0	70	11	81	20	0	2	22	0	0	0	0	167	0
8:15 - 8:30	1	47	0	48	0	57	9	66	7	0	6	13	0	0	0	0	127	0
8:30 - 8:45	0	50	0	50	0	81	9	90	9	0	1	10	0	0	0	0	150	0
8:45 - 9:00	4	57	0	61	0	92	16	108	13	0	3	16	0	0	0	0	185	0
9:00 - 9:15	2	49	0	51	0	84	13	97	16	0	2	18	0	0	0	0	166	0
9:15 - 9:30	0	58	0	58	0	114	11	125	8	0	0	8	0	0	0	0	191	0
9:30 - 9:45	0	53	0	53	0	110	17	127	9	0	6	15	0	0	0	0	195	0
9:45 - 10:00	1	57	0	58	0	133	16	149	7	0	2	9	0	0	0	0	216	0
10:00 - 10:15	4	68	0	72	0	141	22	163	13	0	3	16	0	0	0	0	251	0
10:15 - 10:30	1	74	0	75	0	117	14	131	14	0	5	19	0	0	0	0	225	0
10:30 - 10:45	1	96	0	97	0	126	18	144	13	0	1	14	0	0	0	0	255	0
10:45 - 11:00	0	89	0	89	0	149	16	165	16	0	2	18	0	0	0	0	272	0
11:00 - 11:15	1	107	0	108	0	175	18	193	15	0	3	18	0	0	0	0	319	0
11:15 - 11:30	2	99	0	101	0	133	7	140	8	0	1	9	0	0	0	0	250	0
11:30 - 11:45	3	117	0	120	0	167	14	181	12	0	3	15	0	0	0	0	316	0
11:45 - 12:00	1	99	0	100	0	197	18	215	18	0	5	23	0	0	0	0	338	0
12:00 - 12:15	1	112	0	113	0	188	15	203	11	0	1	12	0	0	0	0	328	0
12:15 - 12:30	5	95	0	100	0	155	12	167	6	0	6	12	0	0	0	0	279	0
12:30 - 12:45	0	108	0	108	0	157	13	170	5	0	4	9	0	0	0	0	287	0
12:45 - 13:00	3	122	0	125	0	166	30	196	14	0	6	20	0	0	0	0	341	0
13:00 - 13:15	4	152	0	156	0	124	13	137	14	0	1	15	0	0	0	0	308	0
13:15 - 13:30	6	67	0	73	0	88	7	95	14	0	2	16	0	0	0	0	184	0
13:30 - 13:45	4	78	0	82	0	97	18	115	5	0	1	6	0	0	0	0	203	0
13:45 - 14:00	4	114	0	118	0	153	15	168	13	0	2	15	0	0	0	0	301	0
14:00 - 14:15	3	138	0	141	0	129	27	156	17	0	1	18	0	0	0	0	315	0
14:15 - 14:30	4	149	0	153	0	171	16	187	19	0	4	23	0	0	0	0	363	0
14:30 - 14:45	6	125	0	131	0	116	14	130	14	0	5	19	0	0	0	0	280	0
14:45 - 15:00	2	125	0	127	0	183	8	191	18	0	3	21	0	0	0	0	339	0
15:00 - 15:15	2	131	0	133	0	142	22	164	12	0	0	12	0	0	0	0	309	0
15:15 - 15:30	1	113	0	114	0	140	17	157	12	0	3	15	0	0	0	0	286	0
15:30 - 15:45	0	127	0	127	0	172	12	184	13	0	3	16	0	0	0	0	327	0
15:45 - 16:00	2	97	0	99	0	127	23	150	11	0	3	14	0	0	0	0	263	0
16:00 - 16:15	3	102	0	105	0	130	22	152	9	0	6	15	0	0	0	0	272	0
16:15 - 16:30	2	122	0	124	0	168	19	187	16	0	3	19	0	0	0	0	330	0
16:30 - 16:45	3	134	0	137	0	177	23	200	24	0	2	26	0	0	0	0	363	0
16:45 - 17:00	1	122	0	123	0	211	17	228	16	0	4	20	0	0	0	0	371	0
17:00 - 17:15	3	133	0	136	0	184	18	202	29	0	0	29	0	0	0	0	367	0
17:15 - 17:30	1	133	0	134	0	173	17	190	26	0	5	31	0	0	0	0	355	0
17:30 - 17:45	6	112	0	118	0	198	16	214	25	0	2	27	0	0	0	0	359	0
17:45 - 18:00	3	122	0	125	0	149	19	168	26	0	8	34	0	0	0	0	327	0
18:00 - 18:15	9	117	0	126	0	196	13	209	34	0	6	40	0	0	0	0	375	0
18:15 - 18:30	4	149	0	153	0	137	12	149	30	0	8	38	0	0	0	0	340	0
18:30 - 18:45	3	122	0	125	0	159	18	177	47	0	4	51	0	0	0	0	353	0
18:45 - 19:00	10	124	0	134	0	128	12	140	28	0	0	28	0	0	0	0	302	0
TOTAL	124	4754	0	4878	0	6537	734	7271	744	0	147	891	0	0	0	0	13040	0
Trucks	0	20	0	20	0	16	12	28	11	0	1	12	0	0	0	0	60	0.5%
School Buses	0	6	0	6	0	21	3	24	2	0	5	7	0	0	0	0	37	0.3%

TOTAL AND PEAK HOUR VOLUME DIAGRAMS

Bower Pkwy AT Saturn Pkwy Date: 11/22/2016

12.0 HOUR TOTAL VOLUME
FROM 7:00 TO 15:00

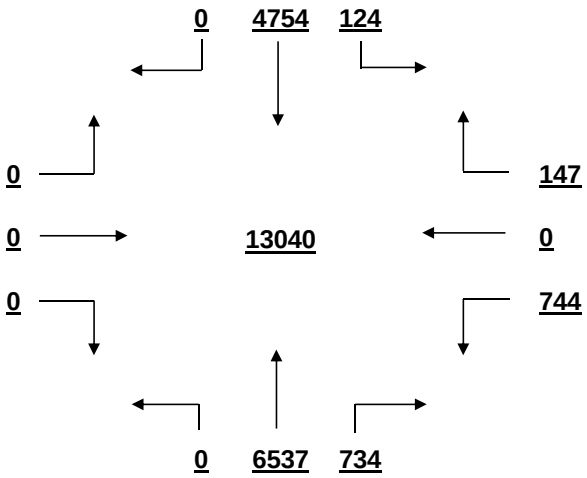

OVERALL PEAK HOUR VOLUME
FROM 16:30 TO 17:30

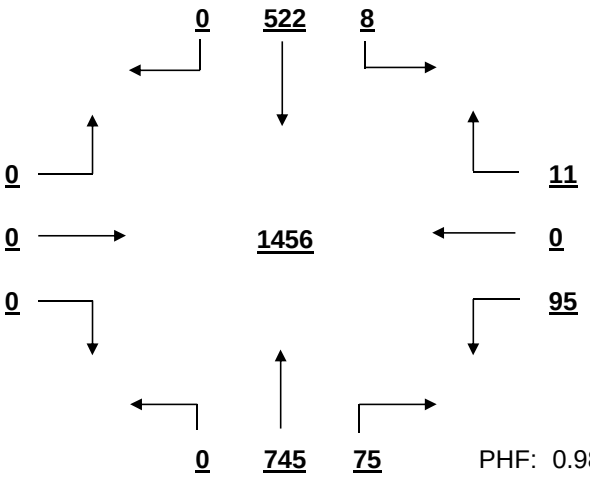

PHF: 0.981

AM PEAK HOUR VOLUME (0:00-10:45)
FROM 9:45 TO 10:45

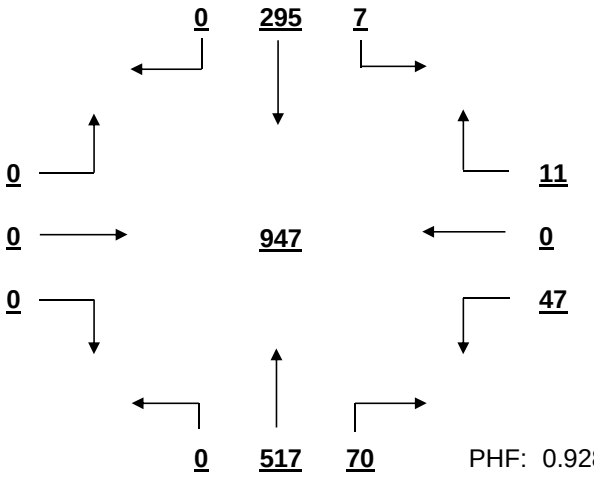

PHF: 0.928

PM PEAK HOUR VOLUME (14:15-23:45)
FROM 16:30 TO 17:30

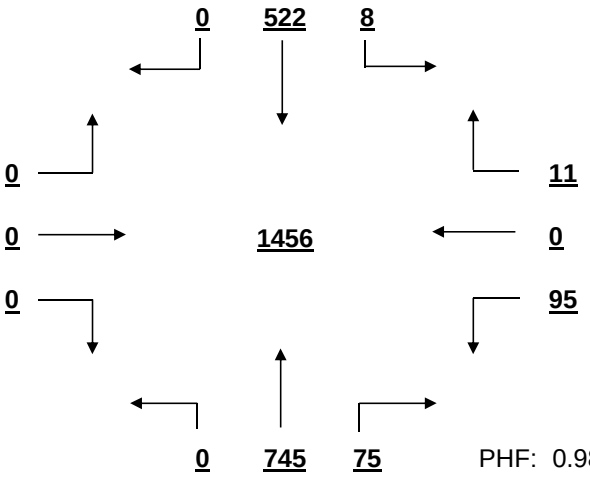

PHF: 0.981

MID-DAY PEAK HOUR VOLUME (11:00-14:00)
FROM 11:30 TO 12:30

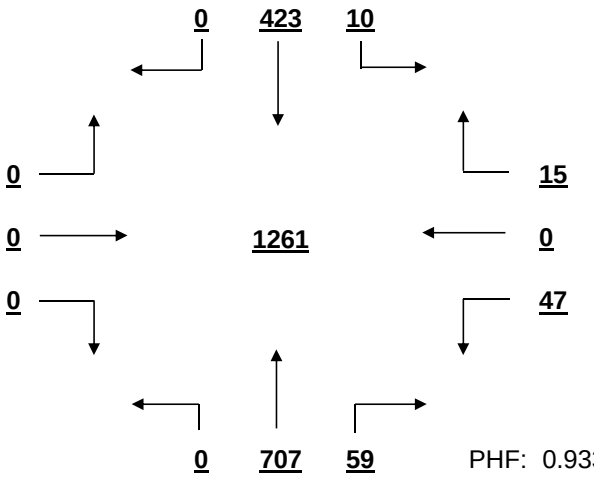

PHF: 0.933

OTHER HOUR VOLUME
FROM 7:00 TO 8:00

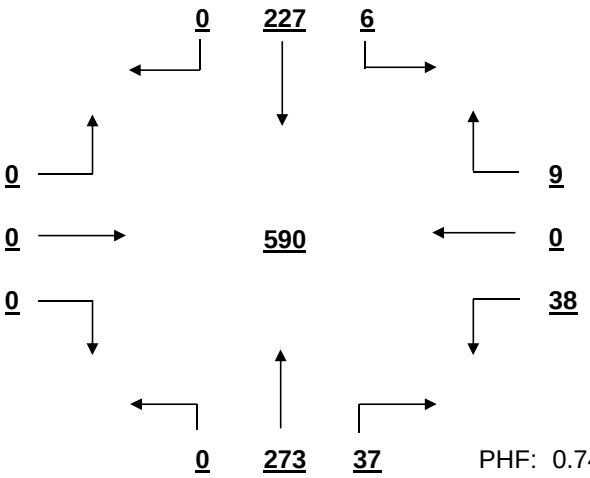

PHF: 0.745

SIGNAL WARRANT ANALYSIS

Bower Pkwy AT Saturn Pkwy Date: 11/22/2016

Minor Street Volume, percent of total = 6.8%
Percent of Left Turns from Minor Street = 83.5%
Percent of Right Turns from Minor Street = 16.5%
Percent of Minor Street Right Turns to Remove from Warrant Analysis = 0%
WARRANT BASIS = **100%**

Warrant No. 1 - Vehicular Volume is not met

Condition A - Minimum Vehicular Volume is not met

Average Major Street % of Warrant				Average Minor Street % of Warrant			
1012.4	/ 500	=	202%	74.3	/ 150	=	50%

Hourly percent of warrant

	7:00 - 8:00	8:00 - 9:00	9:00 - 10:00	10:00 - 11:00	11:00 - 12:00	12:00 - 13:00	13:00 - 14:00	14:00 - 15:00	15:00 - 16:00	16:00 - 17:00	17:00 - 18:00	18:00 - 19:00
Major St.	109%	114%	144%	187%	232%	236%	189%	243%	226%	251%	257%	243%
Minor St.	31%	41%	33%	45%	43%	35%	35%	54%	38%	53%	81%	105%

Condition B - Interruption to Continuous Traffic is not met

Average Major Street % of Warrant				Average Minor Street % of Warrant			
1012.4	/ 750	=	135%	74.3	/ 75	=	99%

Hourly percent of warrant

	7:00 - 8:00	8:00 - 9:00	9:00 - 10:00	10:00 - 11:00	11:00 - 12:00	12:00 - 13:00	13:00 - 14:00	14:00 - 15:00	15:00 - 16:00	16:00 - 17:00	17:00 - 18:00	18:00 - 19:00
Major St.	72%	76%	96%	125%	154%	158%	126%	162%	150%	167%	172%	162%
Minor St.	63%	81%	67%	89%	87%	71%	69%	108%	76%	107%	161%	209%

80% Combination of Conditions A & B is not met

Warrant No. 2 - Four Hour Vehicular Volume is met

Hourly percent of warrant

	7:00 - 8:00	8:00 - 9:00	9:00 - 10:00	10:00 - 11:00	11:00 - 12:00	12:00 - 13:00	13:00 - 14:00	14:00 - 15:00	15:00 - 16:00	16:00 - 17:00	17:00 - 18:00	18:00 - 19:00
Minor St.	19%	26%	29%	59%	81%	66%	47%	101%	74%	100%	151%	196%

Warrant No. 3 - Peak Hour is met

		Percent of warrant			Percent of warrant
Overall Peak Hour:	16:30 - 17:30		Higher Volume Side Street Peak Hour:	17:45 - 18:45	
Minor St.		90%	Minor St.		116%

Warrant No. 4 - Pedestrian Volume. Pedestrian volume shown are minumum volumes assuming heavy major street traffic. If these volumes are met, warrant 4 requires further engineering analysis

S

Minimum 4 hour ped. volume crossing major street: 107

Minimum peak hour ped. volume crossing major street: 133

Number of pedestrians crossing major street

	7:00 - 8:00	8:00 - 9:00	9:00 - 10:00	10:00 - 11:00	11:00 - 12:00	12:00 - 13:00	13:00 - 14:00	14:00 - 15:00	15:00 - 16:00	16:00 - 17:00	17:00 - 18:00	18:00 - 19:00
Major t.	0	0	0	0	0	0	0	0	0	0	0	0

Warrant No. 7 - Crash Experience (Requires 3 criteria analysis by engineering)

Total Number: 0 From: 1/1/2005 to 1/1/2008

Accident Rate: 0.00 per million entering vehicles

Types of Accidents	No.	/	Avg.		No.	/	Avg.
Right Angle	0	/	0.0	Rear End	0	/	0.0
Lost Control	0	/	0.0	Side Swipe	0	/	0.0
Left Turn	0	/	0.0	Other	0	/	0.0

SOUTH CAROLINA DEPARTMENT OF TRANSPORTATION
DISTRICT 1
TRAFFIC ENGINEERING

County: Richland City: Columbia Date: 11/21/2016

Major Rt: Piney Grove Rd * Not on State System Minor Rt: Bower Pkwy-Jamil Rd * Not on State System

Day of Week: Monday Weather: Clear Office: Short Counts JMS

Type of Control: Signal Speed Limit (major st) 35

Direction of Minor Street: N-S Intersection ADT - 28910 (Calc)

Number of Lanes (major st)* 2 Number of Lanes (minor st)* 1

* Each Direction

INTERSECTION VOLUME SUMMARY

	From N Bower Pkwy-Jamil R				From S Bower Pkwy-Jamil R				From E Piney Grove Rd				From W Piney Grove Rd				Total	Total
	LT	STR	RT	TOT	LT	STR	RT	TOT	LT	STR	RT	TOT	LT	STR	RT	TOT	Vol	Peds
7:00 - 7:15	13	12	9	34	7	11	23	41	29	48	24	101	9	96	5	110	286	1
7:15 - 7:30	30	15	15	60	2	13	27	42	31	49	42	122	19	176	5	200	424	0
7:30 - 7:45	42	37	16	95	4	16	20	40	27	77	49	153	13	157	16	186	474	0
7:45 - 8:00	40	40	11	91	6	15	24	45	41	42	68	151	18	165	8	191	478	0
8:00 - 8:15	46	34	10	90	3	10	21	34	34	53	50	137	14	126	4	144	405	1
8:15 - 8:30	36	34	15	85	2	4	22	28	19	53	66	138	12	126	8	146	397	0
8:30 - 8:45	35	27	6	68	4	9	17	30	22	62	55	139	14	101	6	121	358	0
8:45 - 9:00	34	21	15	70	4	13	19	36	33	58	104	195	26	100	3	129	430	1
9:00 - 9:15	42	11	15	68	2	18	20	40	20	59	74	153	17	83	3	103	364	1
9:15 - 9:30	19	15	0	34	4	15	23	42	16	61	87	164	20	83	4	107	347	0
9:30 - 9:45	45	11	0	56	3	19	22	44	24	61	102	187	10	73	1	84	371	0
9:45 - 10:00	40	28	15	83	3	25	24	52	29	68	109	206	17	70	2	89	430	2
10:00 - 10:15	56	13	10	79	3	17	21	41	16	62	104	182	17	71	5	93	395	0
10:15 - 10:30	60	14	13	87	6	20	20	46	21	62	120	203	25	76	5	106	442	0
10:30 - 10:45	54	26	17	97	6	15	25	46	10	70	119	199	22	67	2	91	433	0
10:45 - 11:00	59	20	24	103	4	24	24	52	24	83	125	232	22	90	10	122	509	0
11:00 - 11:15	62	20	17	99	7	0	36	43	23	63	135	221	20	58	3	81	444	0
11:15 - 11:30	80	21	18	119	2	22	24	48	16	85	128	229	25	86	3	114	510	2
11:30 - 11:45	64	25	15	104	5	27	22	54	32	82	168	282	22	133	6	161	601	0
11:45 - 12:00	77	35	20	132	2	32	20	54	36	86	183	305	36	103	2	141	632	0
12:00 - 12:15	95	48	24	167	6	33	25	64	33	102	208	343	20	88	4	112	686	0
12:15 - 12:30	95	38	30	163	6	35	24	65	20	103	204	327	28	74	3	105	660	0
12:30 - 12:45	104	56	36	196	9	31	29	69	31	88	160	279	29	95	2	126	670	1
12:45 - 13:00	109	74	35	218	5	25	30	60	44	76	155	275	36	92	4	132	685	1
13:00 - 13:15	111	58	32	201	4	29	26	59	29	84	134	247	19	104	4	127	634	1
13:15 - 13:30	108	49	20	177	4	29	18	51	37	91	115	243	29	93	9	131	602	2
13:30 - 13:45	107	36	31	174	5	27	25	57	36	97	117	250	30	91	9	130	611	3
13:45 - 14:00	101	52	35	188	6	31	25	62	26	82	156	264	17	106	5	128	642	0
14:00 - 14:15	108	57	28	193	9	32	48	89	34	104	129	267	29	87	6	122	671	0
14:15 - 14:30	114	48	32	194	6	21	31	58	39	101	117	257	19	85	9	113	622	1
14:30 - 14:45	101	52	27	180	4	24	27	55	30	100	156	286	25	86	7	118	639	0
14:45 - 15:00	95	46	38	179	14	39	35	88	22	87	91	200	26	104	5	135	602	0
15:00 - 15:15	24	39	43	106	11	54	52	117	23	62	83	168	34	102	4	140	531	2
15:15 - 15:30	88	43	0	131	8	63	42	113	55	56	71	182	43	83	7	133	559	0
15:30 - 15:45	77	32	28	137	6	32	33	71	94	117	76	287	46	112	3	161	656	0
15:45 - 16:00	88	46	34	168	16	43	38	97	35	105	105	245	30	118	8	156	666	0
16:00 - 16:15	87	46	37	170	6	49	25	80	32	95	162	289	51	122	6	179	718	0
16:15 - 16:30	93	50	18	161	14	38	34	86	31	109	139	279	45	108	9	162	688	1
16:30 - 16:45	91	39	27	157	12	52	20	84	20	123	134	277	37	70	5	112	630	0
16:45 - 17:00	87	42	38	167	7	28	25	60	37	158	153	348	33	104	10	147	722	0
17:00 - 17:15	90	50	33	173	16	38	41	95	25	162	120	307	34	119	10	163	738	1
17:15 - 17:30	72	41	35	148	13	44	44	101	35	139	144	318	38	114	13	165	732	1
17:30 - 17:45	93	47	36	176	11	40	24	75	23	163	120	306	33	99	10	142	699	1
17:45 - 18:00	90	43	38	171	14	51	25	90	23	117	125	265	27	111	9	147	673	0
18:00 - 18:15	76	46	26	148	14	36	35	85	29	141	130	300	34	117	8	159	692	3
18:15 - 18:30	77	35	30	142	9	26	29	64	24	133	140	297	32	88	9	129	632	0
18:30 - 18:45	73	34	31	138	5	22	20	47	21	133	132	286	24	92	8	124	595	0
18:45 - 19:00	73	39	21	133	4	20	18	42	12	108	136	256	31	76	5	112	543	0
TOTAL	3461	1745	1104	6310	323	1317	1302	2942	1403	4320	5624	11347	1257	4780	292	6329	26928	26
Trucks	38	11	6	55	6	10	29	45	38	67	50	155	3	51	3	57	312	1.2%
School Buses	5	6	4	15	2	5	12	19	4	9	5	18	21	11	4	36	88	0.3%

TOTAL AND PEAK HOUR VOLUME DIAGRAMS

Piney Grove Rd AT Bower Pkwy-Jamil Rd Date: 11/21/2016

12.0 HOUR TOTAL VOLUME
FROM 7:00 TO 15:00

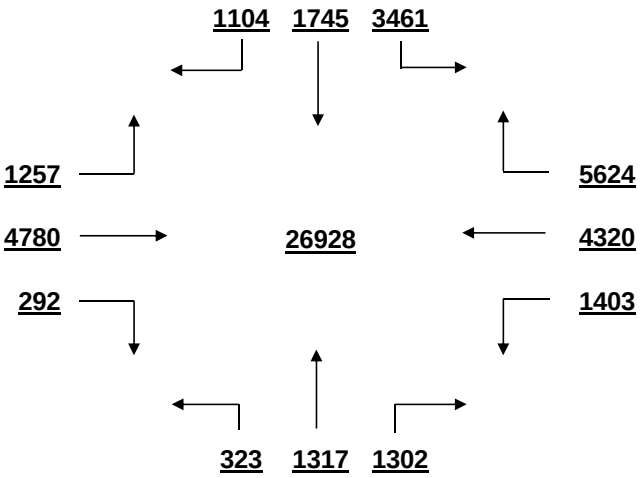

OVERALL PEAK HOUR VOLUME
FROM 16:45 TO 17:45

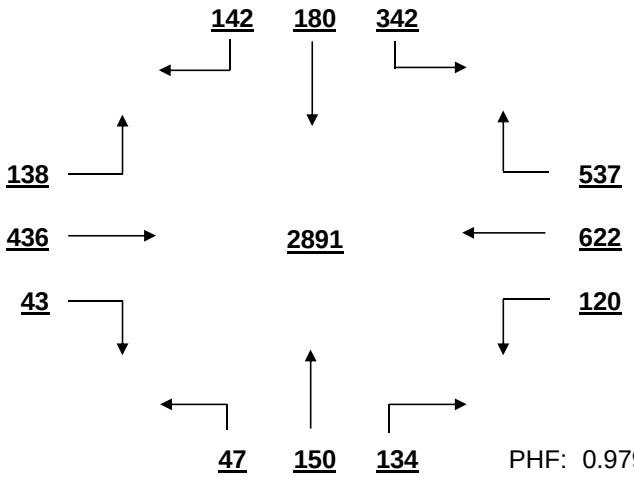

PHF: 0.979

AM PEAK HOUR VOLUME (0:00-10:45)
FROM 7:15 TO 8:15

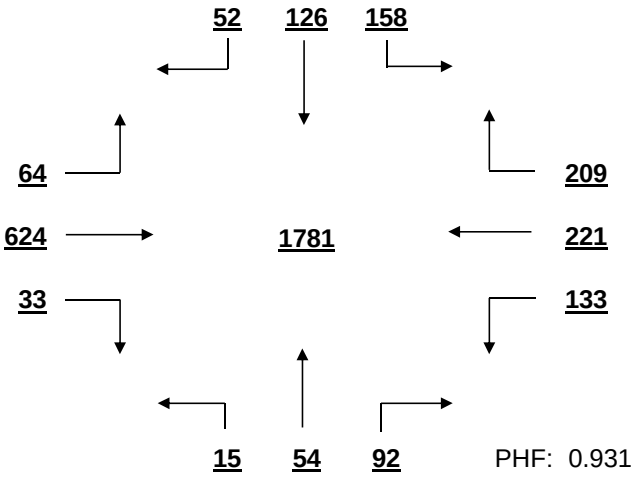

PHF: 0.931

PM PEAK HOUR VOLUME (14:15-23:45)
FROM 16:45 TO 17:45

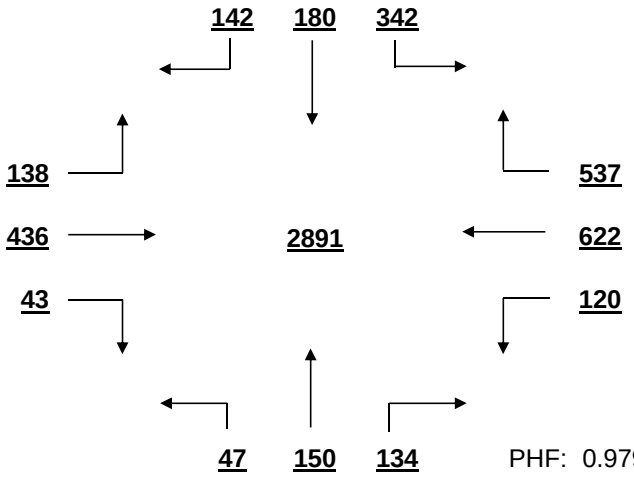

PHF: 0.979

MID-DAY PEAK HOUR VOLUME (11:00-14:00)
FROM 12:00 TO 13:00

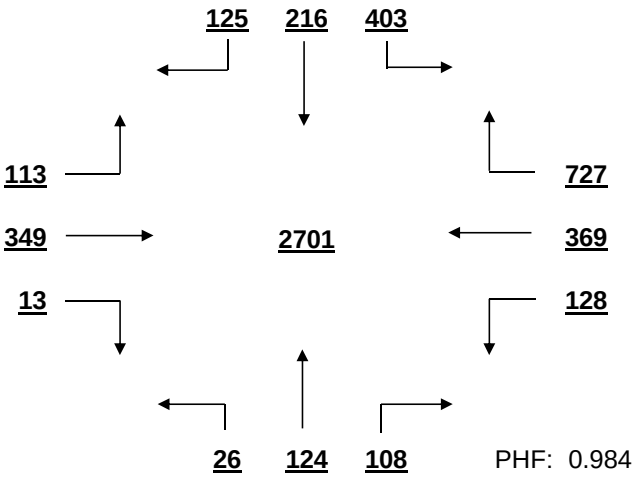

PHF: 0.984

OTHER HOUR VOLUME
FROM 7:00 TO 8:00

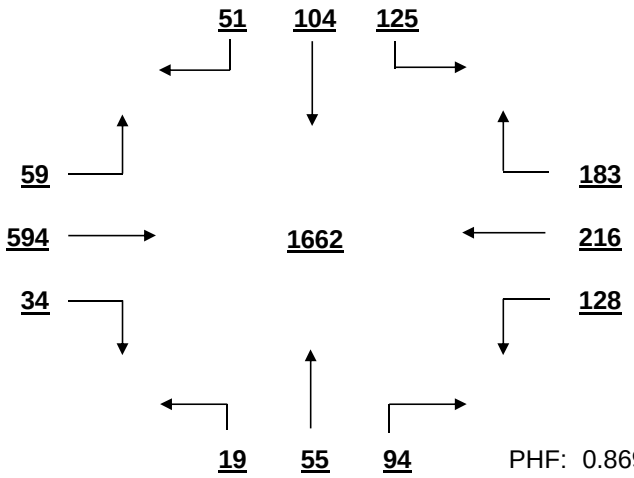

PHF: 0.869

SIGNAL WARRANT ANALYSIS

Piney Grove Rd AT Bower Pkwy-Jamil Rd Date: 11/21/2016

Minor Street Volume, percent of total = 34.4%
Percent of Left Turns from Minor Street = 40.9%
Percent of Right Turns from Minor Street = 26.0%
Percent of Minor Street Right Turns to Remove from Warrant Analysis = 0%
WARRANT BASIS = **100%**

Warrant No. 1 - Vehicular Volume is met

Condition A - Minimum Vehicular Volume is met

Average Major Street % of Warrant				Average Minor Street % of Warrant			
1473.0	/ 600	=	246%	525.8	/ 150	=	351%

Hourly percent of warrant

	7:00 - 8:00	8:00 - 9:00	9:00 - 10:00	10:00 - 11:00	11:00 - 12:00	12:00 - 13:00	13:00 - 14:00	14:00 - 15:00	15:00 - 16:00	16:00 - 17:00	17:00 - 18:00	18:00 - 19:00
Major St.	202%	192%	182%	205%	256%	283%	253%	250%	245%	299%	302%	277%
Minor St.	187%	209%	161%	244%	303%	496%	493%	497%	361%	437%	445%	374%

Condition B - Interruption to Continuous Traffic is met

Average Major Street % of Warrant				Average Minor Street % of Warrant			
1473.0	/ 900	=	164%	525.8	/ 75	=	701%

Hourly percent of warrant

	7:00 - 8:00	8:00 - 9:00	9:00 - 10:00	10:00 - 11:00	11:00 - 12:00	12:00 - 13:00	13:00 - 14:00	14:00 - 15:00	15:00 - 16:00	16:00 - 17:00	17:00 - 18:00	18:00 - 19:00
Major St.	135%	128%	121%	136%	170%	189%	169%	166%	164%	199%	201%	185%
Minor St.	373%	417%	321%	488%	605%	992%	987%	995%	723%	873%	891%	748%

80% Combination of Conditions A & B is met

Warrant No. 2 - Four Hour Vehicular Volume is met

Hourly percent of warrant

	7:00 - 8:00	8:00 - 9:00	9:00 - 10:00	10:00 - 11:00	11:00 - 12:00	12:00 - 13:00	13:00 - 14:00	14:00 - 15:00	15:00 - 16:00	16:00 - 17:00	17:00 - 18:00	18:00 - 19:00
Minor St.	275%	280%	197%	367%	568%	930%	925%	933%	678%	819%	835%	701%

Warrant No. 3 - Peak Hour is met

Overall Peak Hour: 16:45 - 17:45 — Percent of warrant
Minor St. 664%

Higher Volume Side Street Peak Hour: 12:30 - 13:30 — Percent of warrant
Minor St. 626%

Warrant No. 4 - Pedestrian Volume. Pedestrian volume shown are minumum volumes assuming heavy major street traffic. If these volumes are met, warrant 4 requires further engineering analysis

S

Minimum 4 hour ped. volume crossing major street: 107

Minimum peak hour ped. volume crossing major street: 133

Number of pedestrians crossing major street

	7:00 - 8:00	8:00 - 9:00	9:00 - 10:00	10:00 - 11:00	11:00 - 12:00	12:00 - 13:00	13:00 - 14:00	14:00 - 15:00	15:00 - 16:00	16:00 - 17:00	17:00 - 18:00	18:00 - 19:00
Major t.	1	0	1	0	0	1	1	1	0	0	1	0

Warrant No. 7 - Crash Experience (Requires 3 criteria analysis by engineering)

Total Number: 0 From: 1/1/2005 to 1/1/2008
Accident Rate: 0.00 per million entering vehicles

Types of Accidents	No.	/	Avg.		No.	/	Avg.
Right Angle	0	/	0.0	Rear End	0	/	0.0
Lost Control	0	/	0.0	Side Swipe	0	/	0.0
Left Turn	0	/	0.0	Other	0	/	0.0

SOUTH CAROLINA DEPARTMENT OF TRANSPORTATION
DISTRICT 1
TRAFFIC ENGINEERING

County: Richland City: Columbia Date: 11/21/2016

Major Rt: Piney Grove Rd * Not on State System Minor Rt: Foxfire Dr-Country Walk Apts * Not on State System

Day of Week: Monday Weather: Clear Office: Short Counts JMS

Type of Control: Stop Sign Speed Limit (major st) 35

Direction of Minor Street: N-S Intersection ADT - 23840 (Calc)

Number of Lanes (major st)* 2 Number of Lanes (minor st)* 1

* Each Direction

INTERSECTION VOLUME SUMMARY

	From N Foxfire Dr-Country				From S Foxfire Dr-Country				From E Piney Grove Rd				From W Piney Grove Rd				Total	Total
	LT	STR	RT	TOT	LT	STR	RT	TOT	LT	STR	RT	TOT	LT	STR	RT	TOT	Vol	Peds
7:00 - 7:15	8	0	3	11	0	0	0	0	0	103	1	104	0	124	0	124	239	0
7:15 - 7:30	3	0	4	7	0	0	0	0	0	124	0	124	2	215	0	217	348	0
7:30 - 7:45	9	0	5	14	0	0	0	0	0	153	3	156	3	213	0	216	386	0
7:45 - 8:00	7	0	3	10	0	0	0	0	0	182	1	183	3	241	0	244	437	0
8:00 - 8:15	3	0	2	5	0	0	0	0	0	133	2	135	0	208	0	208	348	0
8:15 - 8:30	3	0	2	5	0	0	0	0	0	146	1	147	0	188	0	188	340	0
8:30 - 8:45	6	0	4	10	0	0	0	0	0	127	2	129	1	164	0	165	304	0
8:45 - 9:00	3	0	0	3	0	0	0	0	0	185	4	189	0	155	0	155	347	1
9:00 - 9:15	5	0	2	7	0	0	0	0	0	159	0	159	0	146	0	146	312	0
9:15 - 9:30	2	0	0	2	0	0	0	0	0	205	5	210	3	117	0	120	332	1
9:30 - 9:45	7	0	0	7	0	0	0	0	0	172	1	173	0	134	0	134	314	0
9:45 - 10:00	5	0	3	8	0	0	0	0	0	234	5	239	0	137	0	137	384	2
10:00 - 10:15	2	0	1	3	0	0	0	0	0	220	3	223	0	138	0	138	364	1
10:15 - 10:30	0	0	1	1	0	0	0	0	0	199	5	204	1	160	0	161	366	0
10:30 - 10:45	4	0	2	6	0	0	0	0	0	203	6	209	0	148	0	148	363	0
10:45 - 11:00	3	0	1	4	0	0	0	0	0	239	4	243	0	173	0	173	420	0
11:00 - 11:15	4	0	2	6	0	0	0	0	0	248	3	251	2	159	0	161	418	0
11:15 - 11:30	1	0	0	1	0	0	0	0	0	239	5	244	0	183	0	183	428	1
11:30 - 11:45	4	0	3	7	0	0	0	0	0	288	4	292	0	161	0	161	460	0
11:45 - 12:00	1	0	2	3	0	0	0	0	0	360	2	362	1	200	0	201	566	0
12:00 - 12:15	3	0	3	6	0	0	0	0	0	373	7	380	3	223	0	226	612	0
12:15 - 12:30	5	0	2	7	0	0	0	0	0	392	2	394	0	181	0	181	582	0
12:30 - 12:45	2	0	0	2	0	0	0	0	0	350	4	354	2	223	0	225	581	0
12:45 - 13:00	3	0	0	3	0	0	0	0	0	319	5	324	1	230	0	231	558	1
13:00 - 13:15	2	0	2	4	0	0	0	0	0	312	7	319	2	247	0	249	572	0
13:15 - 13:30	5	0	1	6	0	0	0	0	0	347	6	353	0	219	0	219	578	1
13:30 - 13:45	5	0	2	7	0	0	0	0	0	371	4	375	1	213	0	214	596	1
13:45 - 14:00	4	0	0	4	0	0	0	0	0	308	5	313	0	240	0	240	557	0
14:00 - 14:15	5	0	1	6	0	0	0	0	0	399	4	403	1	243	0	244	653	0
14:15 - 14:30	2	0	1	3	0	0	0	0	0	286	3	289	2	230	0	232	524	0
14:30 - 14:45	3	0	2	5	0	0	0	0	0	301	5	306	3	209	0	212	523	1
14:45 - 15:00	1	0	0	1	0	0	0	0	0	250	8	258	1	244	0	245	504	0
15:00 - 15:15	7	0	4	11	0	0	0	0	0	160	3	163	3	221	0	224	398	4
15:15 - 15:30	6	0	0	6	0	0	0	0	0	192	3	195	2	220	0	222	423	0
15:30 - 15:45	3	0	1	4	0	0	0	0	0	256	4	260	2	218	0	220	484	0
15:45 - 16:00	2	0	1	3	0	0	0	0	0	264	12	276	2	237	0	239	518	0
16:00 - 16:15	6	0	3	9	0	0	0	0	0	250	5	255	2	226	0	228	492	1
16:15 - 16:30	1	0	2	3	0	0	0	0	0	278	4	282	2	224	0	226	511	0
16:30 - 16:45	3	0	5	8	0	0	0	0	0	216	10	226	3	200	0	203	437	0
16:45 - 17:00	9	0	2	11	0	0	0	0	0	346	6	352	3	196	0	199	562	0
17:00 - 17:15	4	0	1	5	0	0	0	0	0	313	4	317	4	257	0	261	583	1
17:15 - 17:30	5	0	2	7	0	0	0	0	0	320	5	325	0	240	0	240	572	0
17:30 - 17:45	1	0	2	3	0	0	0	0	0	296	10	306	1	214	0	215	524	0
17:45 - 18:00	7	0	0	7	0	0	0	0	0	282	9	291	3	235	0	238	536	0
18:00 - 18:15	3	0	2	5	0	0	0	0	0	277	7	284	3	245	0	248	537	1
18:15 - 18:30	6	0	1	7	0	0	0	0	0	291	7	298	5	213	0	218	523	0
18:30 - 18:45	3	0	2	5	0	0	0	0	0	255	5	260	0	186	0	186	451	0
18:45 - 19:00	3	0	2	5	0	0	0	0	0	256	7	263	2	161	0	163	431	0
TOTAL	189	0	84	273	0	0	0	0	0	12179	218	12397	69	9559	0	9628	22298	17
Trucks	3	0	0	3	0	0	0	0	0	138	1	139	1	151	0	152	294	1.3%
School Buses	2	0	1	3	0	0	0	0	0	12	5	17	3	21	0	24	44	0.2%

TOTAL AND PEAK HOUR VOLUME DIAGRAMS

Piney Grove Rd AT Foxfire Dr-Country Walk Apts Date: 11/21/2016

12.0 HOUR TOTAL VOLUME
FROM 7:00 TO 15:00

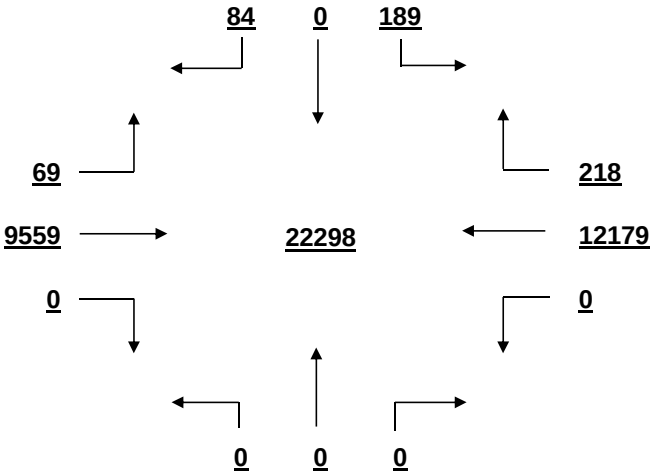

OVERALL PEAK HOUR VOLUME
FROM 13:15 TO 14:15

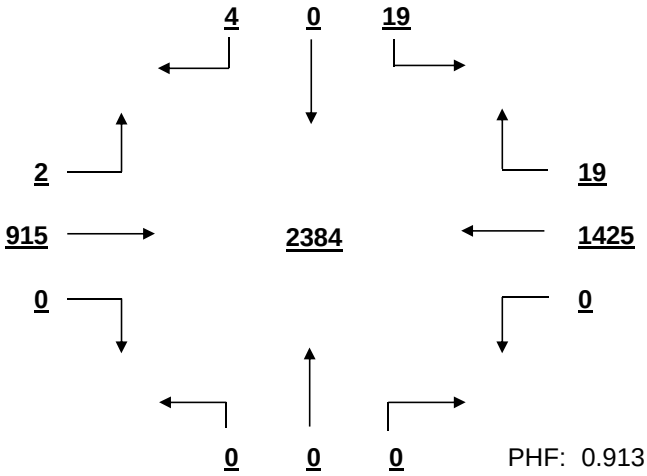

PHF: 0.913

AM PEAK HOUR VOLUME (0:00-10:45)
FROM 7:15 TO 8:15

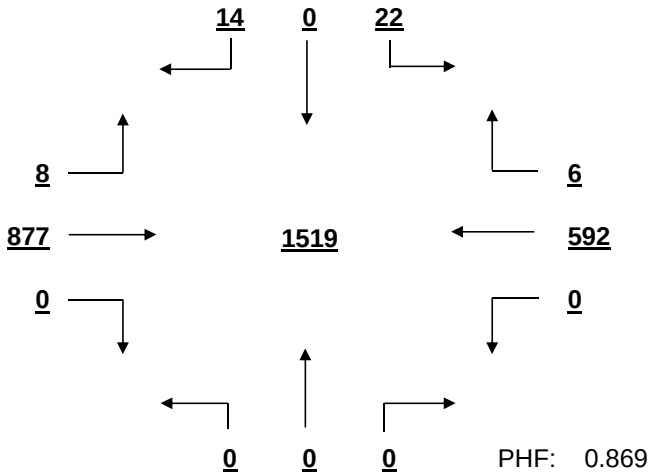

PHF: 0.869

PM PEAK HOUR VOLUME (14:15-23:45)
FROM 16:45 TO 17:45

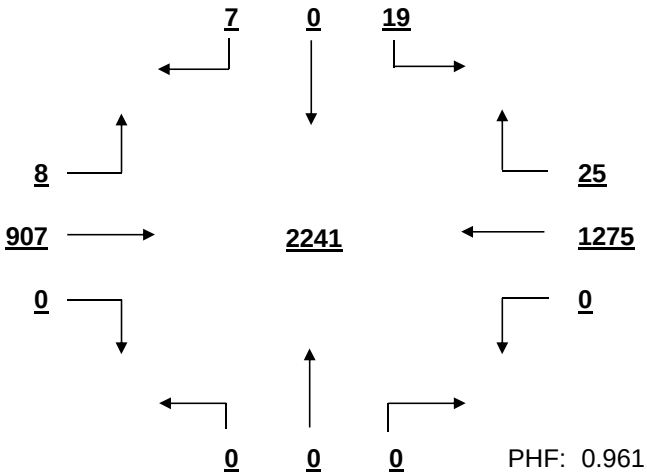

PHF: 0.961

MID-DAY PEAK HOUR VOLUME (11:00-14:00)
FROM 11:45 TO 12:45

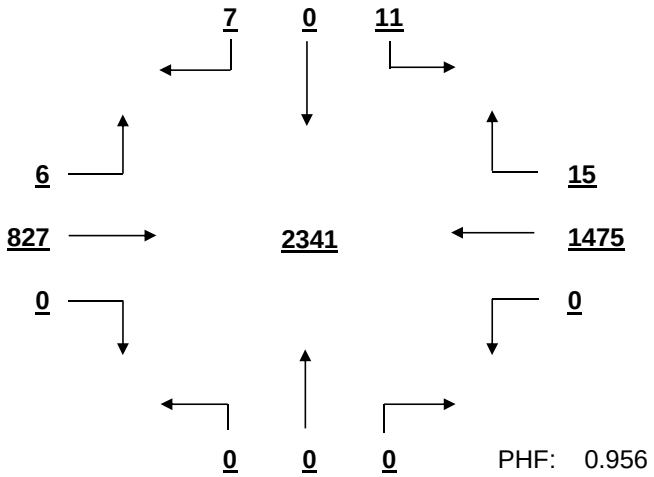

PHF: 0.956

OTHER HOUR VOLUME
FROM 7:00 TO 8:00

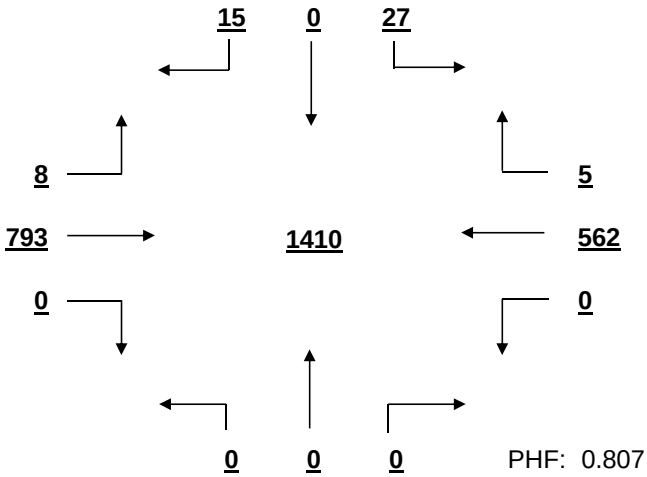

PHF: 0.807

SIGNAL WARRANT ANALYSIS

Piney Grove Rd AT Foxfire Dr-Country Walk Apts Date: 11/21/2016

Minor Street Volume, percent of total = 1.2%
Percent of Left Turns from Minor Street = 69.2%
Percent of Right Turns from Minor Street = 30.8%
Percent of Minor Street Right Turns to Remove from Warrant Analysis = 0%
WARRANT BASIS = **100%**

Warrant No. 1 - Vehicular Volume is not met

Condition A - Minimum Vehicular Volume is not met

Average Major Street % of Warrant				Average Minor Street % of Warrant			
1835.4	/ 600	=	306%	22.8	/ 150	=	15%

Hourly percent of warrant

	7:00 - 8:00	8:00 - 9:00	9:00 - 10:00	10:00 - 11:00	11:00 - 12:00	12:00 - 13:00	13:00 - 14:00	14:00 - 15:00	15:00 - 16:00	16:00 - 17:00	17:00 - 18:00	18:00 - 19:00
Major St.	228%	219%	220%	250%	309%	386%	380%	365%	300%	329%	366%	320%
Minor St.	28%	15%	16%	9%	11%	12%	14%	10%	16%	21%	15%	15%

Condition B - Interruption to Continuous Traffic is not met

Average Major Street % of Warrant				Average Minor Street % of Warrant			
1835.4	/ 900	=	204%	22.8	/ 75	=	30%

Hourly percent of warrant

	7:00 - 8:00	8:00 - 9:00	9:00 - 10:00	10:00 - 11:00	11:00 - 12:00	12:00 - 13:00	13:00 - 14:00	14:00 - 15:00	15:00 - 16:00	16:00 - 17:00	17:00 - 18:00	18:00 - 19:00
Major St.	152%	146%	146%	167%	206%	257%	254%	243%	200%	219%	244%	213%
Minor St.	56%	31%	32%	19%	23%	24%	28%	20%	32%	41%	29%	29%

80% Combination of Conditions A & B is not met

Warrant No. 2 - Four Hour Vehicular Volume is not met

Hourly percent of warrant

	7:00 - 8:00	8:00 - 9:00	9:00 - 10:00	10:00 - 11:00	11:00 - 12:00	12:00 - 13:00	13:00 - 14:00	14:00 - 15:00	15:00 - 16:00	16:00 - 17:00	17:00 - 18:00	18:00 - 19:00
Minor St.	53%	25%	27%	18%	21%	23%	26%	19%	30%	39%	28%	28%

Warrant No. 3 - Peak Hour is not met

Overall Peak Hour: 13:15 - 14:15 — Percent of warrant: Minor St. 23%

Higher Volume Side Street Peak Hour: 7:00 - 8:00 — Percent of warrant: Minor St. 25%

Warrant No. 4 - Pedestrian Volume. Pedestrian volume shown are minumum volumes assuming heavy major street traffic. If these volumes are met, warrant 4 requires further engineering analysis

S

Minimum 4 hour ped. volume crossing major street: 107

Minimum peak hour ped. volume crossing major street: 133

Number of pedestrians crossing major street

	7:00 - 8:00	8:00 - 9:00	9:00 - 10:00	10:00 - 11:00	11:00 - 12:00	12:00 - 13:00	13:00 - 14:00	14:00 - 15:00	15:00 - 16:00	16:00 - 17:00	17:00 - 18:00	18:00 - 19:00
Major t.	0	0	0	0	0	0	0	0	0	0	1	0

Warrant No. 7 - Crash Experience (Requires 3 criteria analysis by engineering)

Total Number: 0 From: 1/1/2005 to 1/1/2008

Accident Rate: 0.00 per million entering vehicles

Types of Accidents	No.	/	Avg.		No.	/	Avg.
Right Angle	0	/	0.0	Rear End	0	/	0.0
Lost Control	0	/	0.0	Side Swipe	0	/	0.0
Left Turn	0	/	0.0	Other	0	/	0.0

SOUTH CAROLINA DEPARTMENT OF TRANSPORTATION
DISTRICT 1
TRAFFIC ENGINEERING

County: Richland City: Columbia Date: 11/22/2016

Major Rt: Piney Grove Rd * Not on State System Minor Rt: Fernandina Rd * Not on State System

Day of Week: Tuesday Weather: Clear Office: Short Counts JMS

Type of Control: Signal Speed Limit (major st) 35

Direction of Minor Street: N-S Intersection ADT - 24530 (Calc)

Number of Lanes (major st)* 2 Number of Lanes (minor st)* 1

* Each Direction

INTERSECTION VOLUME SUMMARY

	From N Fernandina Rd				From S Fernandina Rd				From E Piney Grove Rd				From W Piney Grove Rd				Total	Total
	LT	STR	RT	TOT	LT	STR	RT	TOT	LT	STR	RT	TOT	LT	STR	RT	TOT	Vol	Peds
7:00 - 7:15	1	7	8	16	14	0	0	14	9	108	0	117	4	52	42	98	245	0
7:15 - 7:30	1	21	10	32	14	2	4	20	25	124	3	152	8	75	41	124	328	0
7:30 - 7:45	3	71	32	106	20	1	0	21	37	158	5	200	13	71	63	147	474	0
7:45 - 8:00	0	65	13	78	15	4	2	21	50	167	0	217	27	78	78	183	499	0
8:00 - 8:15	2	43	21	66	25	3	3	31	37	142	0	179	22	94	68	184	460	0
8:15 - 8:30	1	21	11	33	30	5	10	45	29	138	2	169	39	93	88	220	467	1
8:30 - 8:45	2	24	12	38	27	3	3	33	17	90	1	108	36	65	63	164	343	0
8:45 - 9:00	0	17	22	39	24	6	4	34	19	92	1	112	27	63	53	143	328	0
9:00 - 9:15	1	6	13	20	31	9	3	43	12	79	2	93	26	65	41	132	288	0
9:15 - 9:30	1	3	21	25	33	9	6	48	8	104	3	115	31	61	42	134	322	0
9:30 - 9:45	1	6	23	30	32	5	4	41	7	90	7	104	36	56	39	131	306	0
9:45 - 10:00	2	3	19	24	32	4	5	41	8	68	2	78	51	62	21	134	277	1
10:00 - 10:15	2	3	29	34	29	9	4	42	3	93	6	102	66	70	47	183	361	0
10:15 - 10:30	5	8	34	47	46	12	7	65	11	85	4	100	79	67	40	186	398	0
10:30 - 10:45	3	5	34	42	38	11	4	53	3	111	6	120	58	68	32	158	373	0
10:45 - 11:00	3	7	36	46	39	18	3	60	5	92	6	103	72	58	35	165	374	0
11:00 - 11:15	2	5	33	40	44	11	10	65	11	112	5	128	72	65	33	170	403	0
11:15 - 11:30	2	10	42	54	52	12	10	74	11	123	2	136	69	57	35	161	425	0
11:30 - 11:45	4	10	44	58	50	14	10	74	8	127	1	136	93	74	39	206	474	0
11:45 - 12:00	3	10	49	62	65	23	9	97	6	135	7	148	84	76	38	198	505	0
12:00 - 12:15	2	18	43	63	73	18	13	104	4	142	11	157	84	85	36	205	529	1
12:15 - 12:30	3	14	38	55	63	43	9	115	11	126	5	142	88	86	43	217	529	0
12:30 - 12:45	5	16	31	52	59	26	14	99	16	142	10	168	83	83	36	202	521	1
12:45 - 13:00	5	19	42	66	61	21	12	94	14	140	6	160	65	82	50	197	517	1
13:00 - 13:15	4	16	53	73	63	16	6	85	20	126	7	153	95	76	64	235	546	0
13:15 - 13:30	2	18	42	62	53	17	9	79	23	138	10	171	70	82	50	202	514	0
13:30 - 13:45	4	22	45	71	59	18	7	84	16	136	3	155	60	97	45	202	512	0
13:45 - 14:00	4	10	42	56	49	11	9	69	12	142	11	165	79	78	41	198	488	1
14:00 - 14:15	2	12	49	63	58	16	10	84	11	122	8	141	52	91	52	195	483	2
14:15 - 14:30	4	11	39	54	53	14	13	80	10	138	2	150	66	88	43	197	481	1
14:30 - 14:45	1	5	44	50	45	9	7	61	6	147	7	160	69	85	51	205	476	0
14:45 - 15:00	7	14	33	54	58	23	16	97	9	120	8	137	62	99	32	193	481	0
15:00 - 15:15	4	18	43	65	49	16	11	76	9	118	3	130	72	86	37	195	466	0
15:15 - 15:30	5	10	38	53	56	16	10	82	8	129	9	146	62	92	31	185	466	0
15:30 - 15:45	7	14	48	69	60	20	15	95	5	152	7	164	49	82	34	165	493	0
15:45 - 16:00	3	11	29	43	51	34	20	105	6	143	6	155	50	101	38	189	492	1
16:00 - 16:15	8	10	37	55	66	34	14	114	13	153	6	172	59	97	34	190	531	1
16:15 - 16:30	6	8	45	59	63	44	21	128	18	145	9	172	51	105	38	194	553	0
16:30 - 16:45	6	12	48	66	97	48	13	158	14	154	8	176	42	103	41	186	586	1
16:45 - 17:00	5	22	27	54	88	41	24	153	17	155	5	177	63	106	49	218	602	0
17:00 - 17:15	5	9	76	90	129	64	29	222	8	176	7	191	47	96	33	176	679	0
17:15 - 17:30	10	14	42	66	82	36	25	143	7	144	16	167	40	132	38	210	586	0
17:30 - 17:45	8	23	35	66	94	37	32	163	11	138	7	156	45	104	42	191	576	0
17:45 - 18:00	9	22	38	69	81	47	27	155	12	133	8	153	51	106	36	193	570	1
18:00 - 18:15	2	38	30	70	72	71	27	170	19	157	1	177	33	117	42	192	609	0
18:15 - 18:30	5	40	31	76	65	65	19	149	20	153	4	177	37	116	48	201	603	0
18:30 - 18:45	5	40	34	79	61	61	23	145	42	146	7	195	43	116	49	208	627	0
18:45 - 19:00	4	28	31	63	58	58	23	139	64	140	6	210	26	95	43	164	576	0
TOTAL	174	839	1639	2652	2526	1085	559	4170	741	6193	260	7194	2556	4056	2114	8726	22742	13
Trucks	3	6	0	9	37	7	2	46	9	33	2	44	31	35	26	92	191	0.8%
School Buses	0	1	2	3	9	0	1	10	3	10	1	14	5	10	8	23	50	0.2%

TOTAL AND PEAK HOUR VOLUME DIAGRAMS

Piney Grove Rd AT Fernandina Rd Date: 11/22/2016

12.0 HOUR TOTAL VOLUME
FROM 7:00 TO 15:00

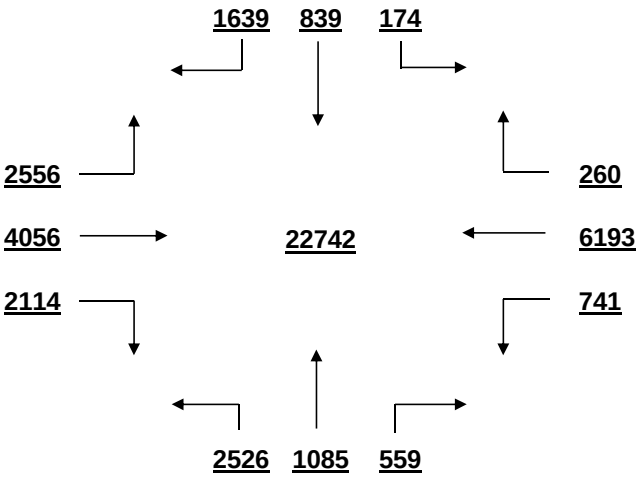

OVERALL PEAK HOUR VOLUME
FROM 16:30 TO 17:30

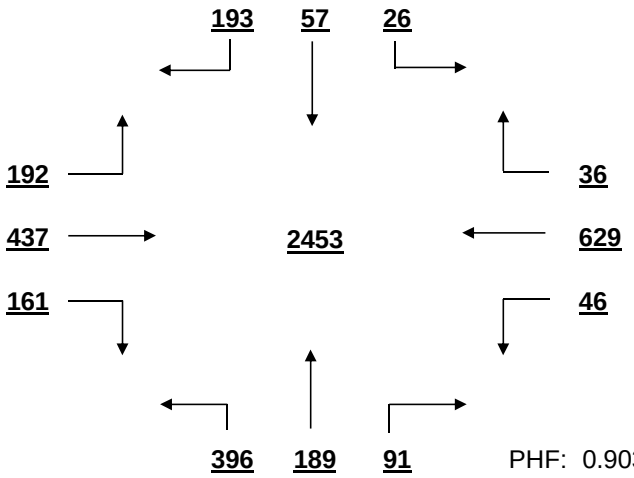

PHF: 0.903

AM PEAK HOUR VOLUME (0:00-10:45)
FROM 7:30 TO 8:30

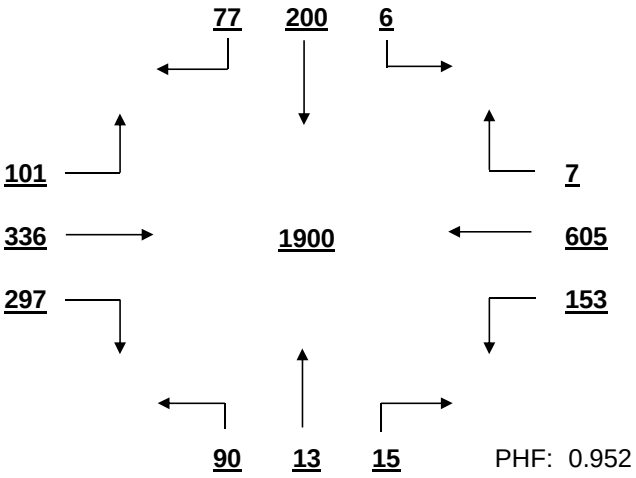

PHF: 0.952

PM PEAK HOUR VOLUME (14:15-23:45)
FROM 16:30 TO 17:30

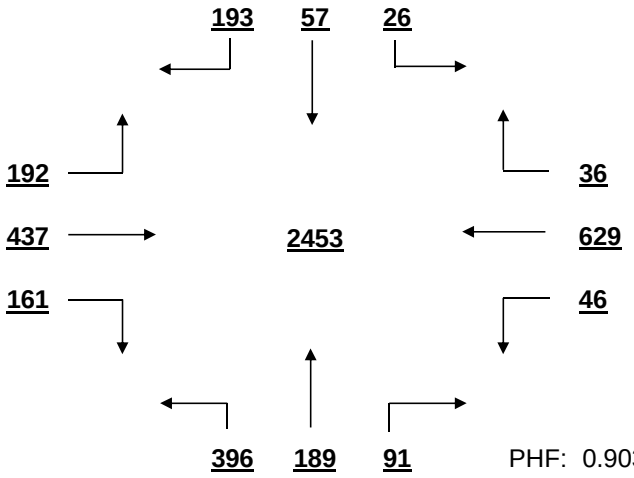

PHF: 0.903

MID-DAY PEAK HOUR VOLUME (11:00-14:00)
FROM 12:15 TO 13:15

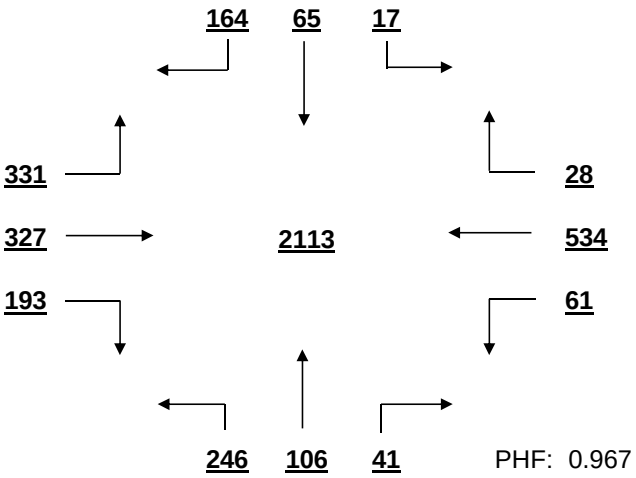

PHF: 0.967

OTHER HOUR VOLUME
FROM 7:00 TO 8:00

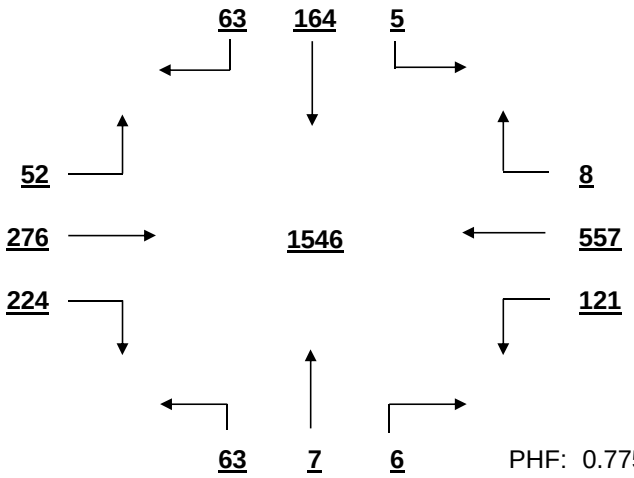

PHF: 0.775

SIGNAL WARRANT ANALYSIS

Piney Grove Rd AT Fernandina Rd Date: 11/22/2016

Minor Street Volume, percent of total = 30.0%
Percent of Left Turns from Minor Street = 39.6%
Percent of Right Turns from Minor Street = 32.2%
Percent of Minor Street Right Turns to Remove from Warrant Analysis = 0%
WARRANT BASIS = **100%**

Warrant No. 1 - Vehicular Volume is met

Condition A - Minimum Vehicular Volume is met

Average Major Street % of Warrant				Average Minor Street % of Warrant			
1326.7	/ 600	=	221%	347.5	/ 150	=	232%

Hourly percent of warrant

	7:00-8:00	8:00-9:00	9:00-10:00	10:00-11:00	11:00-12:00	12:00-13:00	13:00-14:00	14:00-15:00	15:00-16:00	16:00-17:00	17:00-18:00	18:00-19:00
Major St.	206%	213%	154%	186%	214%	241%	247%	230%	222%	248%	240%	254%
Minor St.	155%	117%	115%	147%	207%	275%	211%	215%	239%	369%	455%	402%

Condition B - Interruption to Continuous Traffic is met

Average Major Street % of Warrant				Average Minor Street % of Warrant			
1326.7	/ 900	=	147%	347.5	/ 75	=	463%

Hourly percent of warrant

	7:00-8:00	8:00-9:00	9:00-10:00	10:00-11:00	11:00-12:00	12:00-13:00	13:00-14:00	14:00-15:00	15:00-16:00	16:00-17:00	17:00-18:00	18:00-19:00
Major St.	138%	142%	102%	124%	143%	161%	165%	153%	148%	165%	160%	169%
Minor St.	309%	235%	231%	293%	413%	549%	423%	429%	477%	737%	911%	804%

80% Combination of Conditions A & B is met

Warrant No. 2 - Four Hour Vehicular Volume is met

Hourly percent of warrant

	7:00-8:00	8:00-9:00	9:00-10:00	10:00-11:00	11:00-12:00	12:00-13:00	13:00-14:00	14:00-15:00	15:00-16:00	16:00-17:00	17:00-18:00	18:00-19:00
Minor St.	236%	188%	105%	187%	332%	515%	396%	403%	401%	691%	854%	754%

Warrant No. 3 - Peak Hour is met

		Percent of warrant			Percent of warrant
Overall Peak Hour:	16:30-17:30		Higher Volume Side Street Peak Hour:	17:00-18:00	
Minor St.		490%	Minor St.		451%

Warrant No. 4 - Pedestrian Volume. Pedestrian volume shown are minumum volumes assuming heavy major street traffic. If these volumes are met, warrant 4 requires further engineering analysis

S

Minimum 4 hour ped. volume crossing major street: 107

Minimum peak hour ped. volume crossing major street: 133

Number of pedestrians crossing major street

	7:00-8:00	8:00-9:00	9:00-10:00	10:00-11:00	11:00-12:00	12:00-13:00	13:00-14:00	14:00-15:00	15:00-16:00	16:00-17:00	17:00-18:00	18:00-19:00
Major t.	0	1	0	0	0	3	1	2	1	1	1	0

Warrant No. 7 - Crash Experience (Requires 3 criteria analysis by engineering)

Total Number: 0 From: 1/1/2005 to 1/1/2008
Accident Rate: 0.00 per million entering vehicles

Types of Accidents	No.	/	Avg.		No.	/	Avg.
Right Angle	0	/	0.0	Rear End	0	/	0.0
Lost Control	0	/	0.0	Side Swipe	0	/	0.0
Left Turn	0	/	0.0	Other	0	/	0.0

SOUTH CAROLINA DEPARTMENT OF TRANSPORTATION
DISTRICT 1
TRAFFIC ENGINEERING

County: Richland City: Columbia Date: 11/22/2016

Major Rt: Piney Grove Rd * Not on State System Minor Rt: Piney Woods Rd * Not on State System

Day of Week: Tuesday Weather: Clear Office: Short Counts JMS

Type of Control: Other Speed Limit (major st) 35

Direction of Minor Street: N-S Intersection ADT - 12950 (Calc)

Number of Lanes (major st)* 2 Number of Lanes (minor st)* 1 * Each Direction

INTERSECTION VOLUME SUMMARY

	From N Piney Woods Rd				From S Piney Woods Rd				From E Piney Grove Rd				From W Piney Grove Rd				Total	Total
	LT	STR	RT	TOT	LT	STR	RT	TOT	LT	STR	RT	TOT	LT	STR	RT	TOT	Vol	Peds
7:00 - 7:15	1	3	82	86	9	0	0	9	0	36	3	39	14	36	9	59	193	0
7:15 - 7:30	2	4	108	114	11	2	0	13	1	31	4	36	30	37	10	77	240	0
7:30 - 7:45	5	6	142	153	13	2	0	15	0	51	3	54	28	41	10	79	301	0
7:45 - 8:00	3	3	127	133	13	3	0	16	1	52	4	57	31	42	17	90	296	0
8:00 - 8:15	3	5	121	129	5	2	0	7	0	36	3	39	32	46	10	88	263	0
8:15 - 8:30	5	4	102	111	8	2	1	11	0	32	2	34	23	65	15	103	259	0
8:30 - 8:45	1	5	69	75	7	2	0	9	0	26	2	28	19	34	6	59	171	0
8:45 - 9:00	2	2	61	65	16	0	0	16	0	30	4	34	27	27	13	67	182	0
9:00 - 9:15	3	5	123	131	6	4	0	10	0	35	3	38	24	35	12	71	250	0
9:15 - 9:30	5	4	104	113	7	2	0	9	0	38	3	41	32	24	4	60	223	1
9:30 - 9:45	3	3	71	77	11	3	0	14	0	39	2	41	32	25	10	67	199	0
9:45 - 10:00	2	2	61	65	6	3	0	9	0	30	5	35	30	28	15	73	182	0
10:00 - 10:15	1	4	67	72	9	2	0	11	1	40	6	47	37	19	11	67	197	0
10:15 - 10:30	1	2	41	44	12	1	3	16	1	34	3	38	37	27	14	78	176	0
10:30 - 10:45	3	1	45	49	11	5	2	18	0	29	6	35	32	26	6	64	166	0
10:45 - 11:00	7	2	40	49	6	4	1	11	1	36	2	39	31	22	13	66	165	0
11:00 - 11:15	5	2	50	57	6	2	0	8	0	46	4	50	35	23	14	72	187	0
11:15 - 11:30	2	6	51	59	11	0	1	12	0	28	4	32	36	26	5	67	170	0
11:30 - 11:45	2	3	48	53	15	3	0	18	0	44	7	51	44	30	10	84	206	0
11:45 - 12:00	3	4	46	53	6	1	0	7	0	51	3	54	33	41	13	87	201	0
12:00 - 12:15	5	1	63	69	11	4	0	15	0	45	14	59	48	41	9	98	241	0
12:15 - 12:30	2	2	43	47	11	1	0	12	0	56	5	61	37	48	13	98	218	0
12:30 - 12:45	6	5	48	59	7	3	0	10	1	49	5	55	49	43	16	108	232	0
12:45 - 13:00	10	1	51	62	13	5	0	18	1	46	6	53	41	52	10	103	236	0
13:00 - 13:15	5	4	54	63	10	3	1	14	2	44	5	51	39	36	7	82	210	0
13:15 - 13:30	5	5	40	50	11	2	1	14	1	33	5	39	42	38	17	97	200	0
13:30 - 13:45	3	4	51	58	15	3	0	18	2	52	7	61	48	41	16	105	242	1
13:45 - 14:00	2	4	49	55	19	4	2	25	1	45	9	55	33	41	13	87	222	0
14:00 - 14:15	6	2	44	52	12	1	2	15	0	52	3	55	57	48	13	118	240	0
14:15 - 14:30	8	3	50	61	21	2	0	23	0	38	7	45	55	46	18	119	248	0
14:30 - 14:45	4	2	56	62	13	3	0	16	2	55	6	63	37	43	9	89	230	0
14:45 - 15:00	6	0	46	52	15	5	2	22	0	43	6	49	61	47	13	121	244	0
15:00 - 15:15	3	4	32	39	5	3	1	9	0	55	7	62	54	43	7	104	214	0
15:15 - 15:30	6	4	45	55	9	4	0	13	1	49	5	55	54	44	16	114	237	0
15:30 - 15:45	4	2	47	53	18	3	2	23	0	80	12	92	57	38	8	103	271	0
15:45 - 16:00	7	4	45	56	11	1	0	12	0	49	5	54	56	44	13	113	235	0
16:00 - 16:15	8	3	62	73	23	1	0	24	1	74	4	79	63	33	17	113	289	0
16:15 - 16:30	7	4	58	69	15	3	0	18	0	64	4	68	62	40	15	117	272	0
16:30 - 16:45	5	3	57	65	16	8	0	24	0	70	12	82	62	42	20	124	295	0
16:45 - 17:00	7	2	49	58	20	5	2	27	0	83	5	88	70	43	18	131	304	0
17:00 - 17:15	5	4	73	82	8	9	0	17	0	84	13	97	76	42	17	135	331	0
17:15 - 17:30	7	9	53	69	21	6	1	28	0	67	12	79	80	50	25	155	331	0
17:30 - 17:45	5	6	57	68	21	3	0	24	0	39	5	44	74	42	25	141	277	0
17:45 - 18:00	7	6	66	79	16	8	0	24	0	52	4	56	83	36	16	135	294	0
18:00 - 18:15	5	5	71	81	15	4	1	20	0	61	12	73	76	45	21	142	316	0
18:15 - 18:30	4	7	87	98	18	2	0	20	0	55	4	59	74	40	29	143	320	0
18:30 - 18:45	8	5	83	96	19	6	1	26	0	51	11	62	72	51	25	148	332	0
18:45 - 19:00	2	3	93	98	28	3	1	32	1	67	9	77	76	29	15	120	327	0
TOTAL	211	174	3132	3517	609	148	25	782	18	2302	275	2595	2243	1840	658	4741	11635	2
Trucks	6	4	21	31	1	1	2	4	1	18	4	23	18	16	6	40	98	0.8%
School Buses	0	0	4	4	5	2	2	9	0	2	4	6	8	1	0	9	28	0.2%

TOTAL AND PEAK HOUR VOLUME DIAGRAMS

Piney Grove Rd AT Piney Woods Rd Date: 11/22/2016

12.0 HOUR TOTAL VOLUME
FROM 7:00 TO 15:00

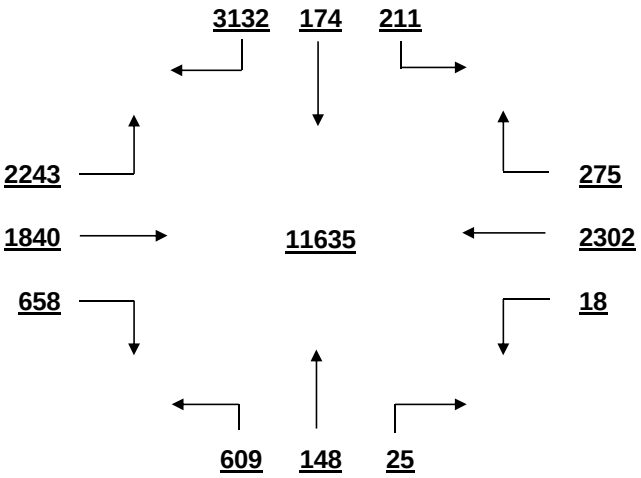

OVERALL PEAK HOUR VOLUME
FROM 18:00 TO 19:00

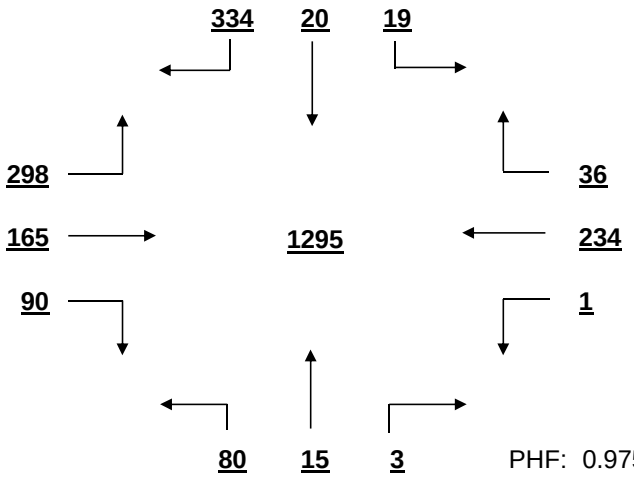

PHF: 0.975

AM PEAK HOUR VOLUME (0:00-10:45)
FROM 7:30 TO 8:30

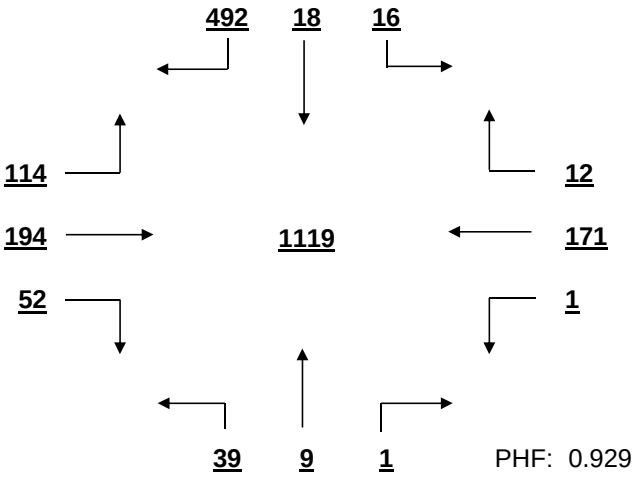

PHF: 0.929

PM PEAK HOUR VOLUME (14:15-23:45)
FROM 18:00 TO 19:00

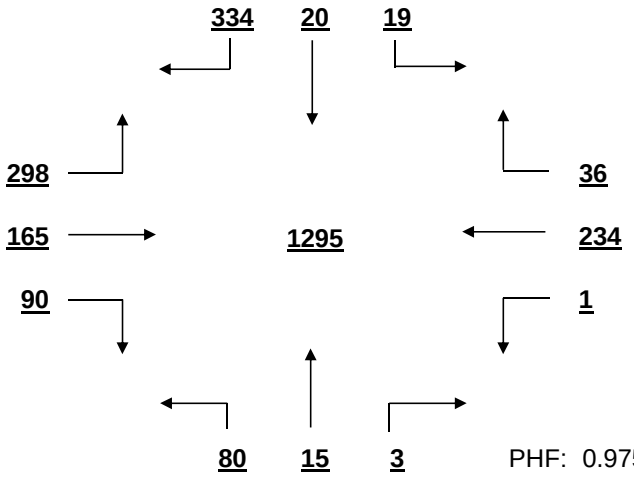

PHF: 0.975

MID-DAY PEAK HOUR VOLUME (11:00-14:00)
FROM 12:00 TO 13:00

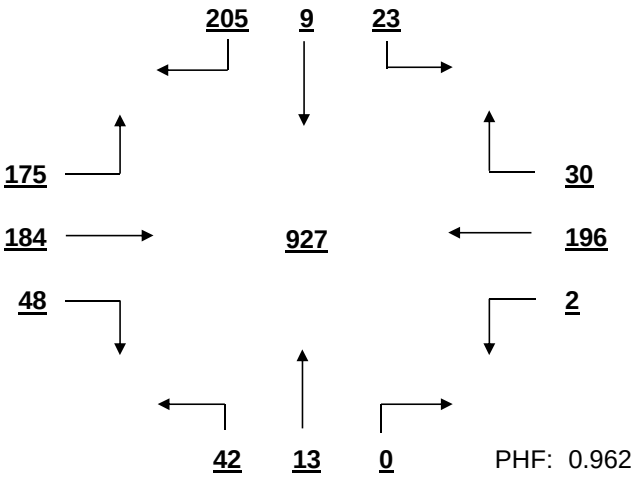

PHF: 0.962

OTHER HOUR VOLUME
FROM 7:00 TO 8:00

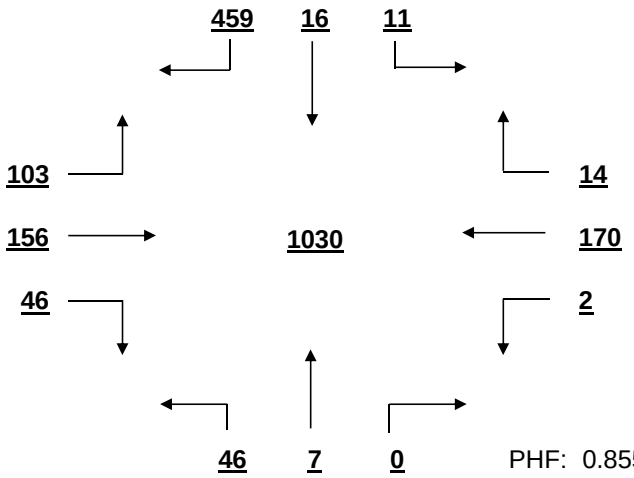

PHF: 0.855

SIGNAL WARRANT ANALYSIS

Piney Grove Rd AT Piney Woods Rd Date: 11/22/2016

Minor Street Volume, percent of total = 36.9%
Percent of Left Turns from Minor Street = 19.1%
Percent of Right Turns from Minor Street = 73.4%
Percent of Minor Street Right Turns to Remove from Warrant Analysis = 0%
WARRANT BASIS = **100%**

Warrant No. 1 - Vehicular Volume is not met

Condition A - Minimum Vehicular Volume is not met

Average Major Street % of Warrant	Average Minor Street % of Warrant
611.3 / 600 = 102%	293.1 / 150 = 195%

Hourly percent of warrant

	7:00-8:00	8:00-9:00	9:00-10:00	10:00-11:00	11:00-12:00	12:00-13:00	13:00-14:00	14:00-15:00	15:00-16:00	16:00-17:00	17:00-18:00	18:00-19:00
Major St.	82%	75%	71%	72%	83%	106%	96%	110%	116%	134%	140%	137%
Minor St.	324%	253%	257%	143%	148%	158%	151%	151%	135%	177%	199%	249%

Condition B - Interruption to Continuous Traffic is not met

Average Major Street % of Warrant	Average Minor Street % of Warrant
611.3 / 900 = 68%	293.1 / 75 = 391%

Hourly percent of warrant

	7:00-8:00	8:00-9:00	9:00-10:00	10:00-11:00	11:00-12:00	12:00-13:00	13:00-14:00	14:00-15:00	15:00-16:00	16:00-17:00	17:00-18:00	18:00-19:00
Major St.	55%	50%	47%	48%	55%	71%	64%	73%	77%	89%	94%	92%
Minor St.	648%	507%	515%	285%	296%	316%	301%	303%	271%	353%	397%	497%

80% Combination of Conditions A & B is not met

Warrant No. 2 - Four Hour Vehicular Volume is met

Hourly percent of warrant

	7:00-8:00	8:00-9:00	9:00-10:00	10:00-11:00	11:00-12:00	12:00-13:00	13:00-14:00	14:00-15:00	15:00-16:00	16:00-17:00	17:00-18:00	18:00-19:00
Minor St.	143%	105%	103%	58%	66%	88%	76%	87%	83%	130%	157%	191%

Warrant No. 3 - Peak Hour is met

Percent of warrant		Percent of warrant	
Overall Peak Hour: 18:00-19:00		Higher Volume Side Street Peak Hour: 7:15-8:15	
Minor St.	104%	Minor St.	104%

Warrant No. 4 - Pedestrian Volume. Pedestrian volume shown are minumum volumes assuming heavy major street traffic. If these volumes are met, warrant 4 requires further engineering analysis

S

Minimum 4 hour ped. volume crossing major street	Minimum peak hour ped. volume crossing major street
107	133

Number of pedestrians crossing major street

	7:00-8:00	8:00-9:00	9:00-10:00	10:00-11:00	11:00-12:00	12:00-13:00	13:00-14:00	14:00-15:00	15:00-16:00	16:00-17:00	17:00-18:00	18:00-19:00
Major t.	0	0	1	0	0	0	0	0	0	0	0	0

Warrant No. 7 - Crash Experience (Requires 3 criteria analysis by engineering)

Total Number: 0 From: 1/1/2005 to 1/1/2008
Accident Rate: 0.00 per million entering vehicles

Types of Accidents	No.	/	Avg.		No.	/	Avg.
Right Angle	0	/	0.0	Rear End	0	/	0.0
Lost Control	0	/	0.0	Side Swipe	0	/	0.0
Left Turn	0	/	0.0	Other	0	/	0.0

SOUTH CAROLINA DEPARTMENT OF TRANSPORTATION
DISTRICT 1
TRAFFIC ENGINEERING

County: Richland City: Columbia Date: 11/22/2016

Major Rt: Jamil Rd * Not on State System Minor Rt: Tram Rd * Not on State System

Day of Week: Tuesday Weather: Clear Office: Short Counts JMS

Type of Control: Stop Sign Speed Limit (major st) 35

Direction of Minor Street: E-W Intersection ADT - 8960 (Calc)

Number of Lanes (major st)* 1 Number of Lanes (minor st)* 1

* Each Direction

INTERSECTION VOLUME SUMMARY

	From N Jamil Rd				From S Jamil Rd				From E Tram Rd				From W Tram Rd				Total	Total
	LT	STR	RT	TOT	LT	STR	RT	TOT	LT	STR	RT	TOT	LT	STR	RT	TOT	Vol	Peds
7:00 - 7:15	0	7	4	11	3	6	0	9	0	0	0	0	12	0	4	16	36	1
7:15 - 7:30	0	37	7	44	1	18	0	19	0	0	0	0	15	0	6	21	84	0
7:30 - 7:45	0	46	3	49	2	22	0	24	0	0	0	0	18	0	10	28	101	0
7:45 - 8:00	0	54	7	61	4	19	0	23	0	0	0	0	4	0	14	18	102	0
8:00 - 8:15	0	56	13	69	2	16	0	18	0	0	0	0	16	0	12	28	115	0
8:15 - 8:30	0	38	8	46	1	16	0	17	0	0	0	0	9	0	4	13	76	0
8:30 - 8:45	0	28	10	38	2	14	0	16	0	0	0	0	10	0	4	14	68	0
8:45 - 9:00	0	24	7	31	3	25	0	28	0	0	0	0	20	0	8	28	87	0
9:00 - 9:15	0	17	4	21	7	16	0	23	0	0	0	0	14	0	5	19	63	0
9:15 - 9:30	0	14	7	21	3	21	0	24	0	0	0	0	10	0	6	16	61	0
9:30 - 9:45	0	11	3	14	1	24	0	25	0	0	0	0	14	0	3	17	56	0
9:45 - 10:00	0	20	12	32	4	23	0	27	0	0	0	0	13	0	2	15	74	0
10:00 - 10:15	0	16	4	20	2	21	0	23	0	0	0	0	20	0	6	26	69	0
10:15 - 10:30	0	24	10	34	0	15	0	15	0	0	0	0	7	0	4	11	60	0
10:30 - 10:45	0	20	7	27	8	22	0	30	0	0	0	0	12	0	2	14	71	0
10:45 - 11:00	0	13	15	28	2	27	0	29	0	0	0	0	17	0	5	22	79	0
11:00 - 11:15	0	18	13	31	5	27	0	32	0	0	0	0	15	0	4	19	82	0
11:15 - 11:30	0	24	11	35	3	27	0	30	0	0	0	0	12	0	7	19	84	0
11:30 - 11:45	0	19	25	44	3	31	0	34	0	0	0	0	10	0	10	20	98	0
11:45 - 12:00	0	21	15	36	4	34	0	38	0	0	0	0	13	0	4	17	91	0
12:00 - 12:15	0	34	14	48	11	36	0	47	0	0	0	0	10	0	6	16	111	0
12:15 - 12:30	0	44	11	55	5	37	1	43	0	0	0	0	21	0	6	27	125	0
12:30 - 12:45	0	47	19	66	4	39	0	43	0	0	0	0	12	0	7	19	128	0
12:45 - 13:00	0	54	12	66	5	34	0	39	0	0	0	0	16	0	4	20	125	0
13:00 - 13:15	0	67	14	81	4	28	0	32	0	0	0	0	14	0	2	16	129	0
13:15 - 13:30	0	53	16	69	3	40	0	43	0	0	0	0	11	0	7	18	130	0
13:30 - 13:45	0	52	19	71	7	34	0	41	0	0	0	0	23	0	5	28	140	0
13:45 - 14:00	0	47	14	61	5	32	0	37	0	0	0	0	17	0	7	24	122	0
14:00 - 14:15	0	50	10	60	4	42	0	46	0	0	0	0	15	0	3	18	124	0
14:15 - 14:30	0	61	26	87	6	35	0	41	0	0	0	0	10	0	1	11	139	0
14:30 - 14:45	0	49	14	63	10	48	0	58	0	0	0	0	27	0	4	31	152	0
14:45 - 15:00	0	36	16	52	9	51	0	60	0	0	0	0	26	0	6	32	144	0
15:00 - 15:15	0	45	19	64	4	44	0	48	0	0	0	0	14	0	6	20	132	0
15:15 - 15:30	0	34	28	62	4	47	0	51	0	0	0	0	10	0	3	13	126	0
15:30 - 15:45	0	45	23	68	8	40	0	48	0	0	0	0	23	0	3	26	142	0
15:45 - 16:00	0	42	20	62	8	53	0	61	0	0	0	0	15	0	3	18	141	0
16:00 - 16:15	0	41	19	60	10	44	0	54	0	0	0	0	12	0	4	16	130	0
16:15 - 16:30	0	52	28	80	17	49	0	66	0	0	0	0	14	0	7	21	167	0
16:30 - 16:45	0	59	25	84	19	66	0	85	0	0	0	0	17	0	3	20	189	0
16:45 - 17:00	0	75	23	98	13	53	0	66	0	0	0	0	12	0	4	16	180	0
17:00 - 17:15	0	67	24	91	10	52	0	62	0	0	0	0	14	0	9	23	176	0
17:15 - 17:30	0	89	31	120	6	44	0	50	0	0	0	0	12	0	6	18	188	0
17:30 - 17:45	0	90	24	114	19	59	0	78	0	0	0	0	18	0	4	22	214	0
17:45 - 18:00	0	94	20	114	12	53	0	65	0	0	0	0	12	0	6	18	197	0
18:00 - 18:15	0	95	21	116	14	58	0	72	0	0	0	0	14	0	2	16	204	0
18:15 - 18:30	0	117	26	143	16	66	0	82	0	0	0	0	19	0	2	21	246	0
18:30 - 18:45	0	111	24	135	10	62	0	72	0	0	0	0	16	0	5	21	228	0
18:45 - 19:00	0	124	18	142	5	52	0	57	0	0	0	0	17	0	2	19	218	0
TOTAL	0	2281	743	3024	308	1722	1	2031	0	0	0	0	702	0	247	949	6004	1
Trucks	0	12	1	13	5	8	0	13	0	0	0	0	5	0	1	6	32	0.5%
School Buses	0	5	4	9	0	3	0	3	0	0	0	0	2	0	5	7	19	0.3%

TOTAL AND PEAK HOUR VOLUME DIAGRAMS

Jamil Rd AT Tram Rd

Date: 11/22/2016

12.0 HOUR TOTAL VOLUME

FROM 7:00 TO 15:00

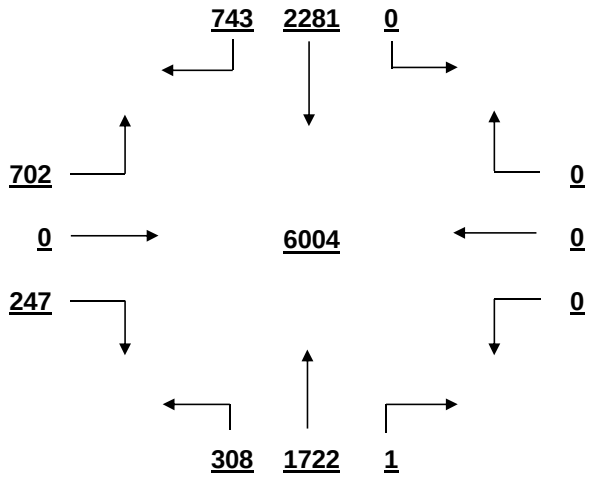

OVERALL PEAK HOUR VOLUME

FROM 18:00 TO 19:00

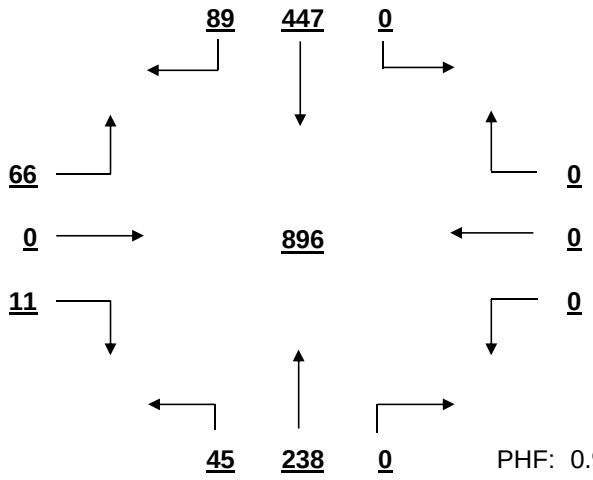

PHF: 0.911

AM PEAK HOUR VOLUME (0:00-10:45)

FROM 7:15 TO 8:15

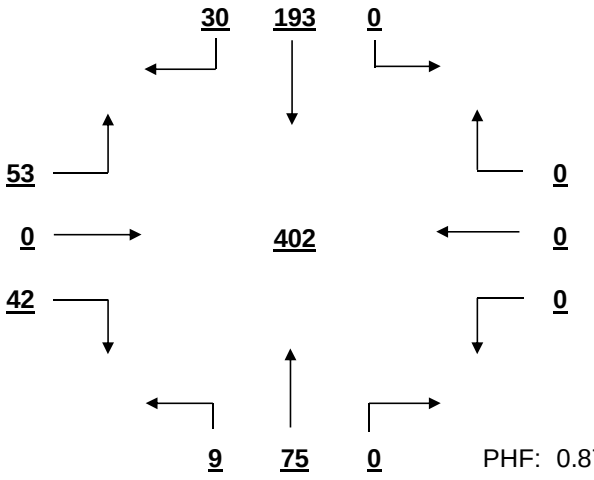

PHF: 0.874

PM PEAK HOUR VOLUME (14:15-23:45)

FROM 18:00 TO 19:00

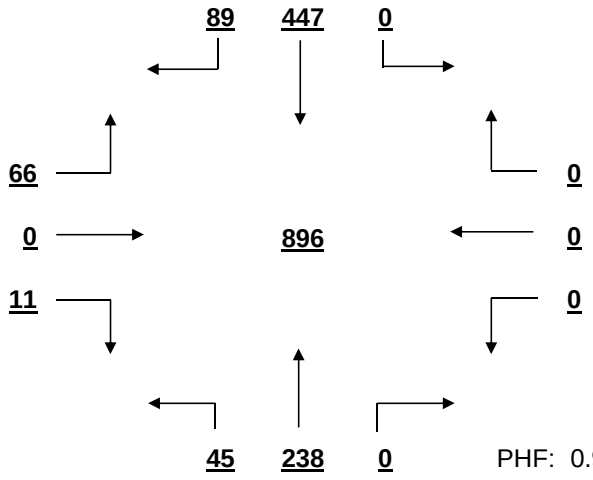

PHF: 0.911

MID-DAY PEAK HOUR VOLUME (11:00-14:00)

FROM 12:45 TO 13:45

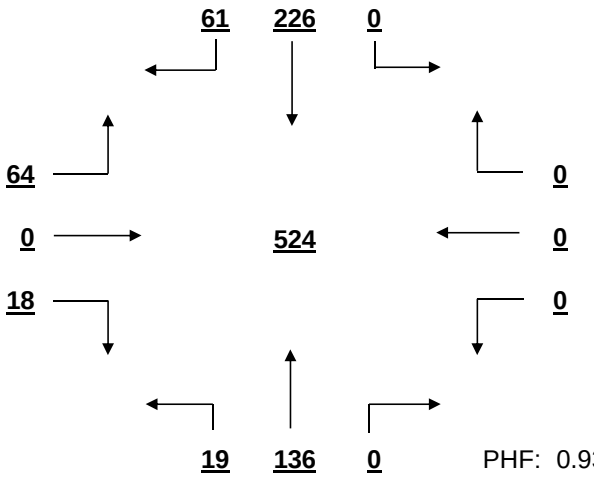

PHF: 0.936

OTHER HOUR VOLUME

FROM 7:00 TO 8:00

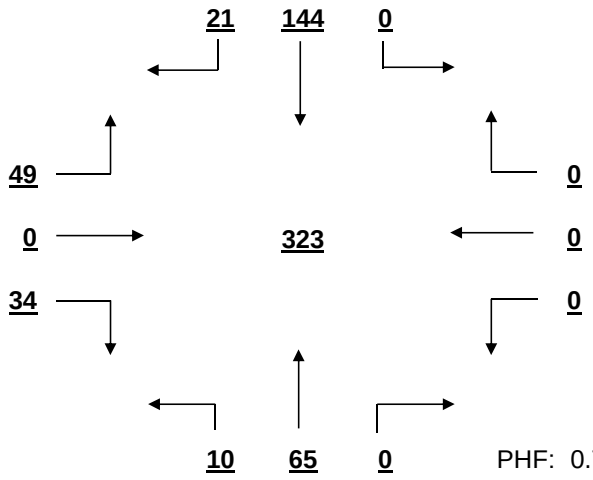

PHF: 0.792

SIGNAL WARRANT ANALYSIS

Jamil Rd AT Tram Rd Date: 11/22/2016

Minor Street Volume, percent of total = 15.8%
Percent of Left Turns from Minor Street = = 74.0%
Percent of Right Turns from Minor Street = 26.0%
Percent of Minor Street Right Turns to Remove from Warrant Analysis = 0%
WARRANT BASIS = **100%**

Warrant No. 1 - Vehicular Volume is not met

Condition A - Minimum Vehicular Volume is not met

Average Major Street % of Warrant	Average Minor Street % of Warrant
421.3 / 500 = 84%	79.1 / 150 = 53%

Hourly percent of warrant

	7:00 - 8:00	8:00 - 9:00	9:00 - 10:00	10:00 - 11:00	11:00 - 12:00	12:00 - 13:00	13:00 - 14:00	14:00 - 15:00	15:00 - 16:00	16:00 - 17:00	17:00 - 18:00	18:00 - 19:00
Major St.	48%	53%	37%	41%	56%	81%	87%	93%	93%	119%	139%	164%
Minor St.	55%	55%	45%	49%	50%	55%	57%	61%	51%	49%	54%	51%

Condition B - Interruption to Continuous Traffic is not met

Average Major Street % of Warrant	Average Minor Street % of Warrant
421.3 / 750 = 56%	79.1 / 75 = 105%

Hourly percent of warrant

	7:00 - 8:00	8:00 - 9:00	9:00 - 10:00	10:00 - 11:00	11:00 - 12:00	12:00 - 13:00	13:00 - 14:00	14:00 - 15:00	15:00 - 16:00	16:00 - 17:00	17:00 - 18:00	18:00 - 19:00
Major St.	32%	35%	25%	27%	37%	54%	58%	62%	62%	79%	93%	109%
Minor St.	111%	111%	89%	97%	100%	109%	115%	123%	103%	97%	108%	103%

80% Combination of Conditions A & B is not met

Warrant No. 2 - Four Hour Vehicular Volume is not met

Hourly percent of warrant

	7:00 - 8:00	8:00 - 9:00	9:00 - 10:00	10:00 - 11:00	11:00 - 12:00	12:00 - 13:00	13:00 - 14:00	14:00 - 15:00	15:00 - 16:00	16:00 - 17:00	17:00 - 18:00	18:00 - 19:00
Minor St.	21%	22%	16%	18%	20%	27%	30%	33%	28%	33%	44%	54%

Warrant No. 3 - Peak Hour is not met

Overall Peak Hour: 18:00 - 19:00 — Percent of warrant
Minor St. 28%

Higher Volume Side Street Peak Hour: 14:30 - 15:30 — Percent of warrant
Minor St. 21%

Warrant No. 4 - Pedestrian Volume. Pedestrian volume shown are minumum volumes assuming heavy major street traffic. If these volumes are met, warrant 4 requires further engineering analysis

S

Minimum 4 hour ped. volume crossing major street: 107

Minimum peak hour ped. volume crossing major street: 133

Number of pedestrians crossing major street

	7:00 - 8:00	8:00 - 9:00	9:00 - 10:00	10:00 - 11:00	11:00 - 12:00	12:00 - 13:00	13:00 - 14:00	14:00 - 15:00	15:00 - 16:00	16:00 - 17:00	17:00 - 18:00	18:00 - 19:00
Major t.	0	0	0	0	0	0	0	0	0	0	0	0

Warrant No. 7 - Crash Experience (Requires 3 criteria analysis by engineering)

Total Number: 0 From: 1/1/2005 to 1/1/2008
Accident Rate: 0.00 per million entering vehicles

Types of Accidents	No.	/	Avg.		No.	/	Avg.
Right Angle	0	/	0.0	Rear End	0	/	0.0
Lost Control	0	/	0.0	Side Swipe	0	/	0.0
Left Turn	0	/	0.0	Other	0	/	0.0

SOUTH CAROLINA DEPARTMENT OF TRANSPORTATION
DISTRICT 1
TRAFFIC ENGINEERING

County: Richland City: Columbia Date: 11/22/2016

Major Rt: Tram Rd * Not on State System Minor Rt: Sidney Rd * Not on State System

Day of Week: Tuesday Weather: Clear Office: Short Counts JMS

Type of Control: Stop Sign Speed Limit (major st) 35

Direction of Minor Street: E-W Intersection ADT - 2830 (Calc)

Number of Lanes (major st)* 1 Number of Lanes (minor st)* 1

* Each Direction

INTERSECTION VOLUME SUMMARY

	From N Tram Rd				From S Tram Rd				From E Sidney Rd				From W Sidney Rd				Total	Total
	LT	STR	RT	TOT	LT	STR	RT	TOT	LT	STR	RT	TOT	LT	STR	RT	TOT	Vol	Peds
7:00 - 7:15	3	3	0	6	0	7	11	18	2	0	7	9	0	0	0	0	33	0
7:15 - 7:30	5	5	0	10	0	12	12	24	1	0	7	8	0	0	0	0	42	0
7:30 - 7:45	6	3	0	9	0	15	22	37	3	0	7	10	0	0	0	0	56	0
7:45 - 8:00	5	5	0	10	0	14	13	27	3	0	2	5	0	0	0	0	42	0
8:00 - 8:15	5	11	0	16	0	14	15	29	2	0	9	11	0	0	0	0	56	0
8:15 - 8:30	5	3	0	8	0	7	14	21	0	0	5	5	0	0	0	0	34	0
8:30 - 8:45	3	8	0	11	0	6	9	15	1	0	3	4	0	0	0	0	30	0
8:45 - 9:00	5	5	0	10	0	19	8	27	4	0	7	11	0	0	0	0	48	0
9:00 - 9:15	4	7	0	11	0	12	10	22	1	0	4	5	0	0	0	0	38	0
9:15 - 9:30	2	6	0	8	0	11	8	19	6	0	3	9	0	0	0	0	36	0
9:30 - 9:45	4	4	0	8	0	9	8	17	4	0	8	12	0	0	0	0	37	0
9:45 - 10:00	8	5	0	13	0	8	6	14	2	0	7	9	0	0	0	0	36	0
10:00 - 10:15	1	10	0	11	0	15	2	17	4	0	5	9	0	0	0	0	37	0
10:15 - 10:30	3	8	0	11	0	7	6	13	3	0	6	9	0	0	0	0	33	0
10:30 - 10:45	3	9	0	12	0	5	2	7	1	0	8	9	0	0	0	0	28	0
10:45 - 11:00	7	11	0	18	0	13	10	23	4	0	9	13	0	0	0	0	54	0
11:00 - 11:15	11	13	0	24	0	8	7	15	3	0	8	11	0	0	0	0	50	0
11:15 - 11:30	6	7	0	13	0	8	8	16	7	0	7	14	0	0	0	0	43	0
11:30 - 11:45	13	12	0	25	0	11	5	16	2	0	5	7	0	0	0	0	48	0
11:45 - 12:00	8	7	0	15	0	7	2	9	2	0	9	11	0	0	0	0	35	0
12:00 - 12:15	5	18	0	23	0	7	4	11	5	0	6	11	0	0	0	0	45	0
12:15 - 12:30	6	9	0	15	0	18	6	24	4	0	13	17	0	0	0	0	56	0
12:30 - 12:45	8	12	0	20	0	14	6	20	6	0	1	7	0	0	0	0	47	0
12:45 - 13:00	9	6	0	15	0	11	1	12	6	0	8	14	0	0	0	0	41	0
13:00 - 13:15	12	10	0	22	0	11	1	12	3	0	8	11	0	0	0	0	45	0
13:15 - 13:30	7	10	0	17	0	13	3	16	4	0	7	11	0	0	0	0	44	0
13:30 - 13:45	8	15	0	23	0	14	6	20	5	0	9	14	0	0	0	0	57	0
13:45 - 14:00	11	11	0	22	0	11	11	22	2	0	8	10	0	0	0	0	54	0
14:00 - 14:15	6	6	0	12	0	12	6	18	6	0	5	11	0	0	0	0	41	0
14:15 - 14:30	13	15	0	28	0	5	1	6	6	0	6	12	0	0	0	0	46	1
14:30 - 14:45	9	17	0	26	0	12	8	20	5	0	14	19	0	0	0	0	65	0
14:45 - 15:00	7	15	0	22	0	16	6	22	5	0	15	20	0	0	0	0	64	0
15:00 - 15:15	13	11	0	24	0	13	3	16	6	0	5	11	0	0	0	0	51	0
15:15 - 15:30	12	18	0	30	0	9	6	15	5	0	4	9	0	0	0	0	54	0
15:30 - 15:45	9	22	0	31	0	10	3	13	6	0	12	18	0	0	0	0	62	0
15:45 - 16:00	9	12	0	21	0	5	3	8	8	0	14	22	0	0	0	0	51	0
16:00 - 16:15	8	17	0	25	0	11	9	20	13	0	7	20	0	0	0	0	65	0
16:15 - 16:30	16	25	0	41	0	12	5	17	8	0	13	21	0	0	0	0	79	0
16:30 - 16:45	8	31	0	39	0	10	4	14	8	0	12	20	0	0	0	0	73	0
16:45 - 17:00	6	29	0	35	0	9	6	15	8	0	6	14	0	0	0	0	64	0
17:00 - 17:15	10	16	0	26	0	9	5	14	12	0	14	26	0	0	0	0	66	0
17:15 - 17:30	15	18	0	33	0	8	5	13	6	0	10	16	0	0	0	0	62	0
17:30 - 17:45	11	32	0	43	0	12	12	24	13	0	11	24	0	0	0	0	91	0
17:45 - 18:00	4	21	0	25	0	9	8	17	5	0	10	15	0	0	0	0	57	0
18:00 - 18:15	16	15	0	31	0	11	4	15	9	0	6	15	0	0	0	0	61	0
18:15 - 18:30	14	19	0	33	0	8	9	17	5	0	12	17	0	0	0	0	67	0
18:30 - 18:45	14	23	0	37	0	13	4	17	10	0	7	17	0	0	0	0	71	0
18:45 - 19:00	14	9	0	23	0	6	4	10	6	0	12	18	0	0	0	0	51	0
TOTAL	387	604	0	991	0	507	327	834	240	0	381	621	0	0	0	0	2446	1
Trucks	3	5	0	8	0	7	5	12	2	0	5	7	0	0	0	0	27	1.1%
School Buses	2	0	0	2	0	2	1	3	6	0	4	10	0	0	0	0	15	0.6%

TOTAL AND PEAK HOUR VOLUME DIAGRAMS

Tram Rd AT Sidney Rd Date: 11/22/2016

12.0 HOUR TOTAL VOLUME
FROM 7:00 TO 15:00

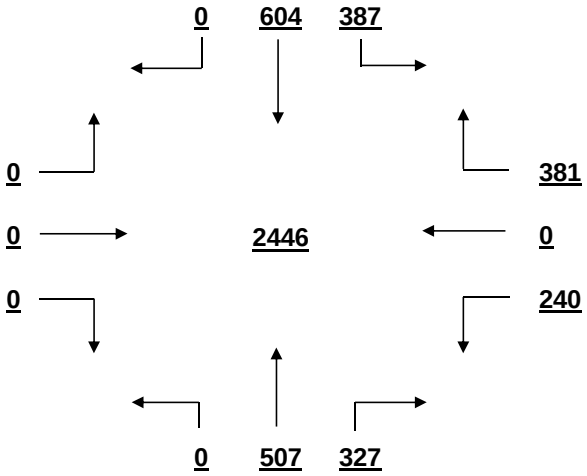

OVERALL PEAK HOUR VOLUME
FROM 16:45 TO 17:45

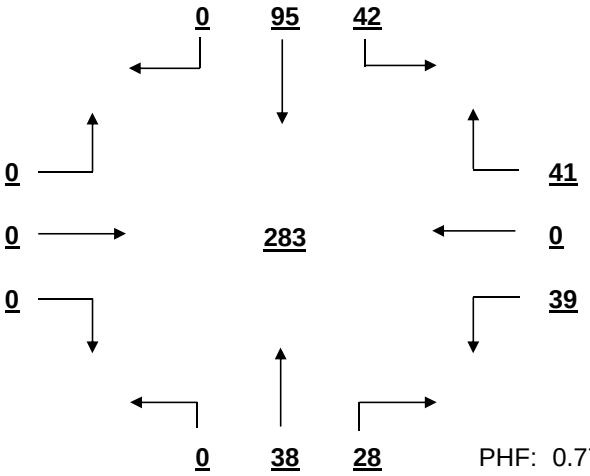

PHF: 0.777

AM PEAK HOUR VOLUME (0:00-10:45)
FROM 7:15 TO 8:15

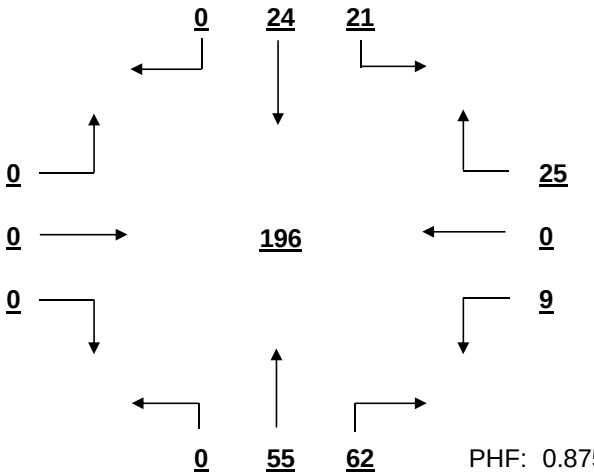

PHF: 0.875

PM PEAK HOUR VOLUME (14:15-23:45)
FROM 16:45 TO 17:45

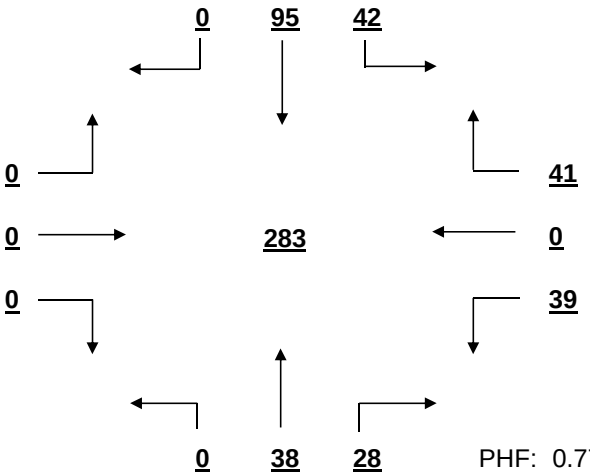

PHF: 0.777

MID-DAY PEAK HOUR VOLUME (11:00-14:00)
FROM 13:00 TO 14:00

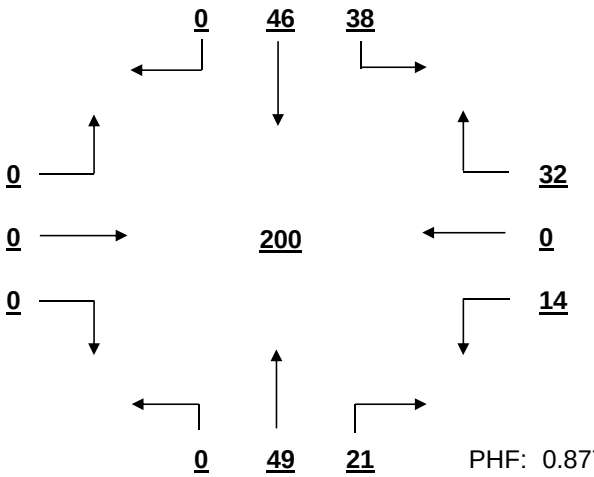

PHF: 0.877

OTHER HOUR VOLUME
FROM 7:00 TO 8:00

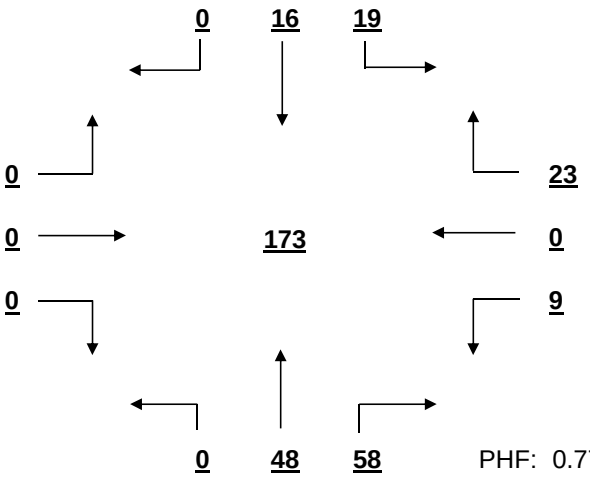

PHF: 0.772

SIGNAL WARRANT ANALYSIS

Tram Rd AT Sidney Rd Date: 11/22/2016

Minor Street Volume, percent of total = 25.4%
Percent of Left Turns from Minor Street = 38.6%
Percent of Right Turns from Minor Street = 61.4%
Percent of Minor Street Right Turns to Remove from Warrant Analysis = 0%
WARRANT BASIS = **100%**

Warrant No. 1 - Vehicular Volume is not met

Condition A - Minimum Vehicular Volume is not met

Average Major Street % of Warrant				Average Minor Street % of Warrant			
152.1	/ 500	=	30%	51.8	/ 150	=	35%

Hourly percent of warrant

	7:00-8:00	8:00-9:00	9:00-10:00	10:00-11:00	11:00-12:00	12:00-13:00	13:00-14:00	14:00-15:00	15:00-16:00	16:00-17:00	17:00-18:00	18:00-19:00
Major St.	28%	27%	22%	22%	27%	28%	31%	31%	32%	41%	39%	37%
Minor St.	21%	21%	23%	27%	29%	33%	31%	41%	40%	50%	54%	45%

Condition B - Interruption to Continuous Traffic is not met

Average Major Street % of Warrant				Average Minor Street % of Warrant			
152.1	/ 750	=	20%	51.8	/ 75	=	69%

Hourly percent of warrant

	7:00-8:00	8:00-9:00	9:00-10:00	10:00-11:00	11:00-12:00	12:00-13:00	13:00-14:00	14:00-15:00	15:00-16:00	16:00-17:00	17:00-18:00	18:00-19:00
Major St.	19%	18%	15%	15%	18%	19%	21%	21%	21%	27%	26%	24%
Minor St.	43%	41%	47%	53%	57%	65%	61%	83%	80%	100%	108%	89%

80% Combination of Conditions A & B is not met

Warrant No. 2 - Four Hour Vehicular Volume is not met

Hourly percent of warrant

	7:00-8:00	8:00-9:00	9:00-10:00	10:00-11:00	11:00-12:00	12:00-13:00	13:00-14:00	14:00-15:00	15:00-16:00	16:00-17:00	17:00-18:00	18:00-19:00
Minor St.	7%	7%	7%	9%	9%	11%	10%	14%	14%	18%	19%	16%

Warrant No. 3 - Peak Hour is not met

Overall Peak Hour: 16:45-17:45 — Percent of warrant — Minor St. 13%

Higher Volume Side Street Peak Hour: 15:45-16:45 — Percent of warrant — Minor St. 13%

Warrant No. 4 - Pedestrian Volume. Pedestrian volume shown are minumum volumes assuming heavy major street traffic. If these volumes are met, warrant 4 requires further engineering analysis

S

Minimum 4 hour ped. volume crossing major street: 107

Minimum peak hour ped. volume crossing major street: 133

Number of pedestrians crossing major street

	7:00-8:00	8:00-9:00	9:00-10:00	10:00-11:00	11:00-12:00	12:00-13:00	13:00-14:00	14:00-15:00	15:00-16:00	16:00-17:00	17:00-18:00	18:00-19:00
Major t.	0	0	0	0	0	0	0	1	0	0	0	0

Warrant No. 7 - Crash Experience (Requires 3 criteria analysis by engineering)

Total Number: 0 From: 1/1/2005 to 1/1/2008

Accident Rate: 0.00 per million entering vehicles

Types of Accidents	No.	/	Avg.		No.	/	Avg.
Right Angle	0	/	0.0	Rear End	0	/	0.0
Lost Control	0	/	0.0	Side Swipe	0	/	0.0
Left Turn	0	/	0.0	Other	0	/	0.0

SOUTH CAROLINA DEPARTMENT OF TRANSPORTATION
DISTRICT 1
TRAFFIC ENGINEERING

County: Richland City: Columbia Date: 11/22/2016

Major Rt: Fernandina Rd * Not on State System Minor Rt: Beatty Rd * Not on State System

Day of Week: Tuesday Weather: Clear Office: Short Counts JMS

Type of Control: Stop Sign Speed Limit (major st) 35

Direction of Minor Street: E-W Intersection ADT - 9810 (Calc)

Number of Lanes (major st)* 1 Number of Lanes (minor st)* 1

* Each Direction

INTERSECTION VOLUME SUMMARY

	From N Fernandina Rd				From S Fernandina Rd				From E Beatty Rd				From W Beatty Rd				Total	Total
	LT	STR	RT	TOT	LT	STR	RT	TOT	LT	STR	RT	TOT	LT	STR	RT	TOT	Vol	Peds
7:00 - 7:15	6	33	0	39	0	21	1	22	7	0	4	11	0	0	0	0	72	0
7:15 - 7:30	4	58	0	62	0	35	3	38	9	0	7	16	0	0	0	0	116	0
7:30 - 7:45	6	125	0	131	0	43	2	45	11	0	12	23	0	0	0	0	199	0
7:45 - 8:00	5	123	0	128	0	44	2	46	10	0	11	21	0	0	0	0	195	0
8:00 - 8:15	3	98	0	101	0	56	2	58	7	0	7	14	0	0	0	0	173	0
8:15 - 8:30	12	78	0	90	0	68	0	68	5	0	9	14	0	0	0	0	172	0
8:30 - 8:45	6	61	0	67	0	36	6	42	1	0	10	11	0	0	0	0	120	0
8:45 - 9:00	6	45	0	51	0	51	1	52	9	0	9	18	0	0	0	0	121	0
9:00 - 9:15	10	54	0	64	0	32	3	35	5	0	10	15	0	0	0	0	114	0
9:15 - 9:30	6	24	0	30	0	47	5	52	2	0	14	16	0	0	0	0	98	0
9:30 - 9:45	5	34	0	39	0	42	1	43	4	0	7	11	0	0	0	0	93	0
9:45 - 10:00	5	26	0	31	0	33	6	39	5	0	8	13	0	0	0	0	83	0
10:00 - 10:15	4	28	0	32	0	37	6	43	5	0	9	14	0	0	0	0	89	0
10:15 - 10:30	4	37	0	41	0	30	2	32	6	0	16	22	0	0	0	0	95	0
10:30 - 10:45	8	36	0	44	0	34	0	34	2	0	12	14	0	0	0	0	92	0
10:45 - 11:00	6	38	0	44	0	53	1	54	3	0	8	11	0	0	0	0	109	0
11:00 - 11:15	8	39	0	47	0	43	4	47	2	0	6	8	0	0	0	0	102	0
11:15 - 11:30	6	52	0	58	0	46	1	47	5	0	7	12	0	0	0	0	117	0
11:30 - 11:45	9	44	0	53	0	57	2	59	5	0	18	23	0	0	0	0	135	0
11:45 - 12:00	7	44	0	51	0	58	2	60	5	0	14	19	0	0	0	0	130	0
12:00 - 12:15	9	52	0	61	0	66	5	71	5	0	9	14	0	0	0	0	146	0
12:15 - 12:30	9	56	0	65	0	50	7	57	4	0	10	14	0	0	0	0	136	0
12:30 - 12:45	7	49	0	56	0	62	5	67	6	0	19	25	0	0	0	0	148	0
12:45 - 13:00	11	6	0	17	0	60	1	61	5	0	7	12	0	0	0	0	90	0
13:00 - 13:15	4	76	0	80	0	44	8	52	10	0	11	21	0	0	0	0	153	0
13:15 - 13:30	9	45	0	54	0	53	3	56	4	0	13	17	0	0	0	0	127	0
13:30 - 13:45	3	57	0	60	0	37	3	40	4	0	13	17	0	0	0	0	117	0
13:45 - 14:00	9	47	0	56	0	65	4	69	7	0	9	16	0	0	0	0	141	0
14:00 - 14:15	6	46	0	52	0	51	3	54	8	0	13	21	0	0	0	0	127	0
14:15 - 14:30	10	39	0	49	0	38	3	41	5	0	10	15	0	0	0	0	105	0
14:30 - 14:45	10	38	0	48	0	52	1	53	6	0	10	16	0	0	0	0	117	0
14:45 - 15:00	4	59	0	63	0	63	7	70	5	0	17	22	0	0	0	0	155	0
15:00 - 15:15	17	42	0	59	0	50	3	53	6	0	15	21	0	0	0	0	133	0
15:15 - 15:30	7	36	0	43	0	77	6	83	3	0	13	16	0	0	0	0	142	0
15:30 - 15:45	8	48	0	56	0	79	4	83	6	0	15	21	0	0	0	0	160	0
15:45 - 16:00	12	47	0	59	0	83	0	83	10	0	12	22	0	0	0	0	164	0
16:00 - 16:15	9	61	0	70	0	85	6	91	6	0	8	14	0	0	0	0	175	0
16:15 - 16:30	10	58	0	68	0	97	3	100	5	0	14	19	0	0	0	0	187	0
16:30 - 16:45	15	79	0	94	0	119	14	133	6	0	15	21	0	0	0	0	248	0
16:45 - 17:00	10	98	0	108	0	113	9	122	6	0	20	26	0	0	0	0	256	0
17:00 - 17:15	14	93	0	107	0	126	5	131	4	0	16	20	0	0	0	0	258	0
17:15 - 17:30	12	72	0	84	0	106	12	118	3	0	14	17	0	0	0	0	219	0
17:30 - 17:45	11	84	0	95	0	113	4	117	3	0	14	17	0	0	0	0	229	0
17:45 - 18:00	8	71	0	79	0	120	8	128	2	0	13	15	0	0	0	0	222	0
18:00 - 18:15	10	111	0	121	0	100	9	109	5	0	14	19	0	0	0	0	249	0
18:15 - 18:30	8	92	0	100	0	74	4	78	3	0	7	10	0	0	0	0	188	0
18:30 - 18:45	6	134	0	140	0	95	4	99	8	0	10	18	0	0	0	0	257	0
18:45 - 19:00	9	125	0	134	0	65	5	70	11	0	10	21	0	0	0	0	225	0
TOTAL	383	2898	0	3281	0	3009	196	3205	264	0	549	813	0	0	0	0	7299	0
Trucks	7	37	0	44	0	37	3	40	4	0	6	10	0	0	0	0	94	1.3%
School Buses	3	14	0	17	0	15	2	17	0	0	4	4	0	0	0	0	38	0.5%

TOTAL AND PEAK HOUR VOLUME DIAGRAMS

Fernandina Rd AT Beatty Rd Date: 11/22/2016

12.0 HOUR TOTAL VOLUME
FROM 7:00 TO 15:00

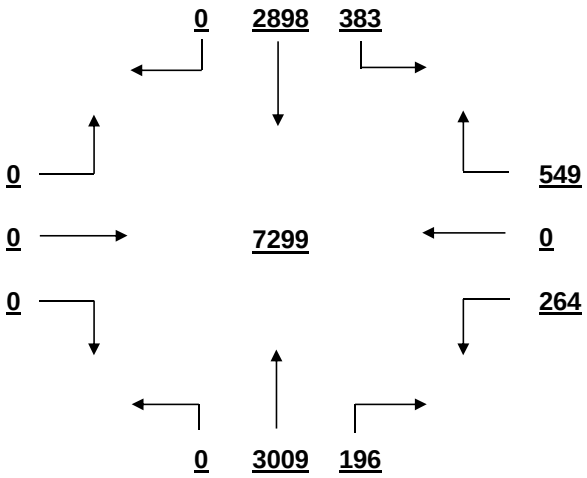

OVERALL PEAK HOUR VOLUME
FROM 16:30 TO 17:30

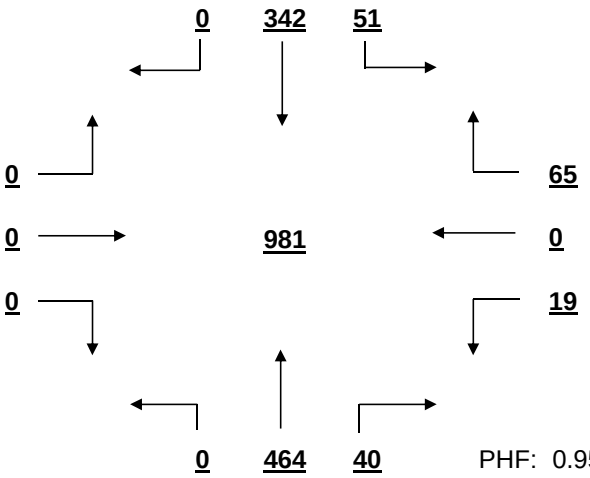

PHF: 0.951

AM PEAK HOUR VOLUME (0:00-10:45)
FROM 7:30 TO 8:30

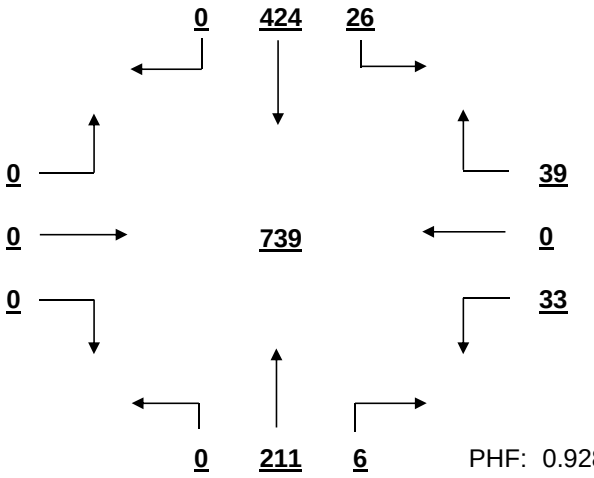

PHF: 0.928

PM PEAK HOUR VOLUME (14:15-23:45)
FROM 16:30 TO 17:30

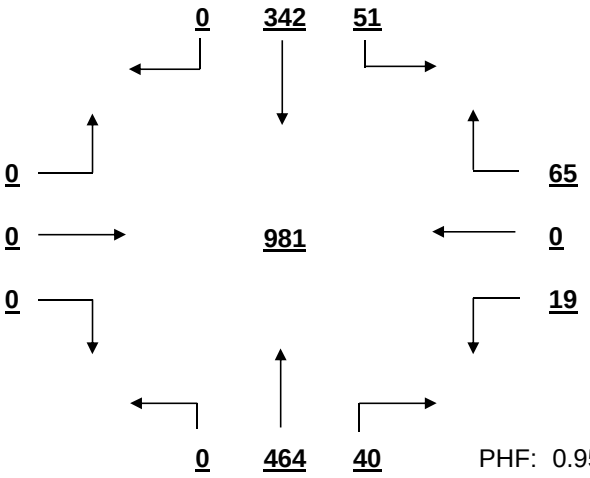

PHF: 0.951

MID-DAY PEAK HOUR VOLUME (11:00-14:00)
FROM 11:45 TO 12:45

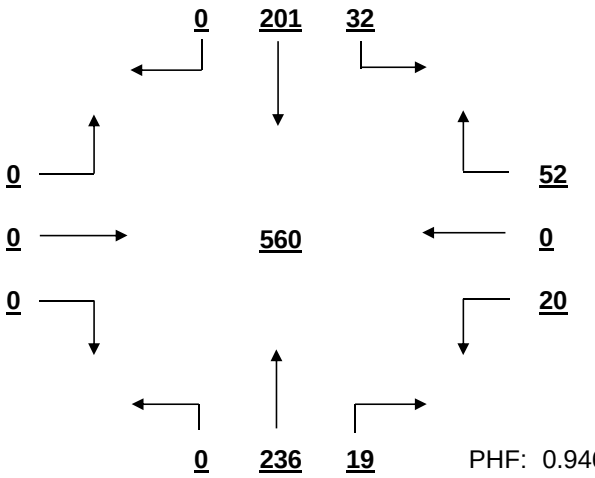

PHF: 0.946

OTHER HOUR VOLUME
FROM 7:00 TO 8:00

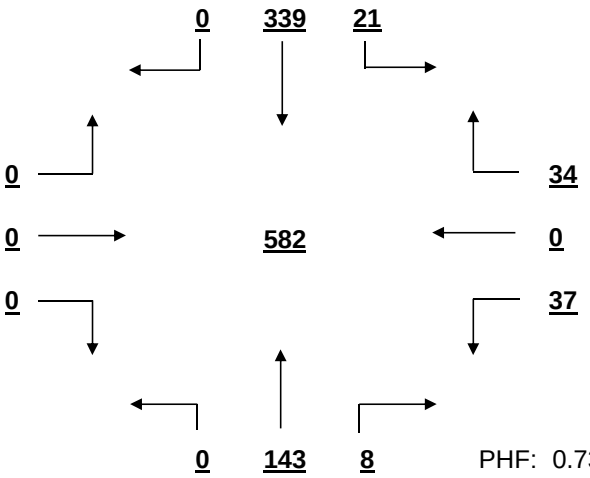

PHF: 0.731

SIGNAL WARRANT ANALYSIS

Fernandina Rd AT Beatty Rd Date: 11/22/2016

Minor Street Volume, percent of total = 11.1%
Percent of Left Turns from Minor Street = 32.5%
Percent of Right Turns from Minor Street = 67.5%
Percent of Minor Street Right Turns to Remove from Warrant Analysis = 0%
WARRANT BASIS = **100%**

Warrant No. 1 - Vehicular Volume is not met

Condition A - Minimum Vehicular Volume is not met

Average Major Street % of Warrant				Average Minor Street % of Warrant			
540.5	/ 500	=	108%	67.8	/ 150	=	45%

Hourly percent of warrant

	7:00 - 8:00	8:00 - 9:00	9:00 - 10:00	10:00 - 11:00	11:00 - 12:00	12:00 - 13:00	13:00 - 14:00	14:00 - 15:00	15:00 - 16:00	16:00 - 17:00	17:00 - 18:00	18:00 - 19:00
Major St.	102%	106%	67%	65%	84%	91%	93%	86%	104%	157%	172%	170%
Minor St.	47%	38%	37%	41%	41%	43%	47%	49%	53%	53%	46%	45%

Condition B - Interruption to Continuous Traffic is not met

Average Major Street % of Warrant				Average Minor Street % of Warrant			
540.5	/ 750	=	72%	67.8	/ 75	=	90%

Hourly percent of warrant

	7:00 - 8:00	8:00 - 9:00	9:00 - 10:00	10:00 - 11:00	11:00 - 12:00	12:00 - 13:00	13:00 - 14:00	14:00 - 15:00	15:00 - 16:00	16:00 - 17:00	17:00 - 18:00	18:00 - 19:00
Major St.	68%	71%	44%	43%	56%	61%	62%	57%	69%	105%	115%	113%
Minor St.	95%	76%	73%	81%	83%	87%	95%	99%	107%	107%	92%	91%

80% Combination of Conditions A & B is not met

Warrant No. 2 - Four Hour Vehicular Volume is not met

Hourly percent of warrant

	7:00 - 8:00	8:00 - 9:00	9:00 - 10:00	10:00 - 11:00	11:00 - 12:00	12:00 - 13:00	13:00 - 14:00	14:00 - 15:00	15:00 - 16:00	16:00 - 17:00	17:00 - 18:00	18:00 - 19:00
Minor St.	28%	23%	16%	18%	21%	23%	26%	25%	32%	52%	52%	51%

Warrant No. 3 - Peak Hour is not met

Percent of warrant
Overall Peak Hour: 16:30 - 17:30
Minor St. 35%

Percent of warrant
Higher Volume Side Street Peak Hour: 16:15 - 17:15
Minor St. 34%

Warrant No. 4 - Pedestrian Volume. Pedestrian volume shown are minumum volumes assuming heavy major street traffic. If these volumes are met, warrant 4 requires further engineering analysis

S

Minimum 4 hour ped. volume crossing major street: 107

Minimum peak hour ped. volume crossing major street: 133

Number of pedestrians crossing major street

	7:00 - 8:00	8:00 - 9:00	9:00 - 10:00	10:00 - 11:00	11:00 - 12:00	12:00 - 13:00	13:00 - 14:00	14:00 - 15:00	15:00 - 16:00	16:00 - 17:00	17:00 - 18:00	18:00 - 19:00
Major t.	0	0	0	0	0	0	0	0	0	0	0	0

Warrant No. 7 - Crash Experience (Requires 3 criteria analysis by engineering)

Total Number: 0 From: 1/1/2005 to 1/1/2008
Accident Rate: 0.00 per million entering vehicles

Types of Accidents	No.	/	Avg.		No.	/	Avg.
Right Angle	0	/	0.0	Rear End	0	/	0.0
Lost Control	0	/	0.0	Side Swipe	0	/	0.0
Left Turn	0	/	0.0	Other	0	/	0.0

SOUTH CAROLINA DEPARTMENT OF TRANSPORTATION
DISTRICT 1
TRAFFIC ENGINEERING

County: Richland City: Columbia Date: 11/22/2016

Major Rt: Broad River Rd * Not on State System Minor Rt: Beatty Rd * Not on State System

Day of Week: Tuesday Weather: Clear Office: Short Counts JMS

Type of Control: Signal Speed Limit (major st) 40

Direction of Minor Street: E-W Intersection ADT - 28800 (Calc)

Number of Lanes (major st)* 2 Number of Lanes (minor st)* 1

* Each Direction

INTERSECTION VOLUME SUMMARY

	From N Broad River Rd				From S Broad River Rd				From E Beatty Rd				From W Beatty Rd				Total	Total
	LT	STR	RT	TOT	LT	STR	RT	TOT	LT	STR	RT	TOT	LT	STR	RT	TOT	Vol	Peds
7:00 - 7:15	0	252	10	262	7	173	0	180	0	0	0	0	14	0	3	17	459	1
7:15 - 7:30	0	373	30	403	11	225	0	236	0	0	0	0	20	0	10	30	669	3
7:30 - 7:45	0	385	26	411	8	263	0	271	0	0	0	0	16	0	2	18	700	0
7:45 - 8:00	0	309	30	339	20	302	0	322	0	0	0	0	25	0	14	39	700	0
8:00 - 8:15	0	300	15	315	10	228	0	238	0	0	0	0	13	0	9	22	575	2
8:15 - 8:30	0	227	20	247	12	235	0	247	0	0	0	0	22	0	11	33	527	3
8:30 - 8:45	0	233	17	250	16	182	0	198	0	0	0	0	15	0	10	25	473	0
8:45 - 9:00	0	212	6	218	7	171	0	178	0	0	0	0	15	0	12	27	423	0
9:00 - 9:15	0	157	9	166	3	140	0	143	0	0	0	0	4	0	11	15	324	4
9:15 - 9:30	0	161	9	170	11	147	0	158	0	0	0	0	10	0	20	30	358	0
9:30 - 9:45	0	176	4	180	9	160	0	169	0	0	0	0	11	0	8	19	368	0
9:45 - 10:00	0	177	8	185	9	167	0	176	0	0	0	0	7	0	16	23	384	1
10:00 - 10:15	0	155	7	162	12	145	0	157	0	0	0	0	6	0	13	19	338	0
10:15 - 10:30	0	180	8	188	8	171	0	179	0	0	0	0	8	0	7	15	382	0
10:30 - 10:45	0	167	11	178	10	147	0	157	0	0	0	0	11	0	13	24	359	0
10:45 - 11:00	0	167	9	176	17	155	0	172	0	0	0	0	10	0	9	19	367	1
11:00 - 11:15	0	170	12	182	10	144	0	154	0	0	0	0	13	0	15	28	364	1
11:15 - 11:30	0	210	13	223	14	182	0	196	0	0	0	0	15	0	8	23	442	0
11:30 - 11:45	0	198	10	208	13	178	0	191	0	0	0	0	8	0	13	21	420	5
11:45 - 12:00	0	190	16	206	11	196	0	207	0	0	0	0	13	0	15	28	441	2
12:00 - 12:15	0	231	8	239	11	202	0	213	0	0	0	0	23	0	15	38	490	0
12:15 - 12:30	0	175	6	181	0	227	0	227	0	0	0	0	9	0	13	22	430	0
12:30 - 12:45	0	206	12	218	0	193	0	193	0	0	0	0	13	0	16	29	440	0
12:45 - 13:00	0	191	13	204	23	226	0	249	0	0	0	0	15	0	12	27	480	2
13:00 - 13:15	0	209	4	213	20	225	0	245	0	0	0	0	15	0	16	31	489	1
13:15 - 13:30	0	203	13	216	10	193	0	203	0	0	0	0	14	0	12	26	445	0
13:30 - 13:45	0	183	14	197	0	229	0	229	0	0	0	0	19	0	16	35	461	0
13:45 - 14:00	0	192	8	200	22	233	0	255	0	0	0	0	13	0	13	26	481	4
14:00 - 14:15	0	226	9	235	13	238	0	251	0	0	0	0	13	0	15	28	514	1
14:15 - 14:30	0	217	19	236	20	209	0	229	0	0	0	0	16	0	10	26	491	1
14:30 - 14:45	0	262	26	288	14	261	0	275	0	0	0	0	14	0	13	27	590	1
14:45 - 15:00	0	236	13	249	22	215	0	237	0	0	0	0	19	0	14	33	519	0
15:00 - 15:15	0	239	9	248	14	229	0	243	0	0	0	0	20	0	13	33	524	0
15:15 - 15:30	0	251	10	261	18	227	0	245	0	0	0	0	14	0	11	25	531	0
15:30 - 15:45	0	236	15	251	0	253	0	253	0	0	0	0	5	0	14	19	523	3
15:45 - 16:00	0	198	17	215	0	266	0	266	0	0	0	0	25	0	14	39	520	1
16:00 - 16:15	0	315	24	339	11	276	0	287	0	0	0	0	21	0	20	41	667	1
16:15 - 16:30	0	249	21	270	0	345	0	345	0	0	0	0	20	0	11	31	646	0
16:30 - 16:45	0	302	25	327	18	363	0	381	0	0	0	0	25	0	14	39	747	2
16:45 - 17:00	0	254	29	283	24	351	0	375	0	0	0	0	16	0	13	29	687	0
17:00 - 17:15	0	247	35	282	11	417	0	428	0	0	0	0	28	0	12	40	750	1
17:15 - 17:30	0	216	22	238	13	408	0	421	0	0	0	0	20	0	17	37	696	1
17:30 - 17:45	0	224	19	243	22	378	0	400	0	0	0	0	27	0	21	48	691	1
17:45 - 18:00	0	267	24	291	18	323	0	341	0	0	0	0	15	0	11	26	658	1
18:00 - 18:15	0	314	17	331	22	345	0	367	0	0	0	0	40	0	24	64	762	5
18:15 - 18:30	0	266	18	284	37	355	0	392	0	0	0	0	37	0	17	54	730	0
18:30 - 18:45	0	172	40	212	34	321	0	355	0	0	0	0	34	0	15	49	616	2
18:45 - 19:00	0	157	33	190	31	297	0	328	0	0	0	0	21	0	20	41	559	0
TOTAL	0	10837	773	11610	646	11516	0	12162	0	0	0	0	807	0	631	1438	25210	51
Trucks	0	136	5	141	21	230	0	251	0	0	0	0	8	14	0	22	414	1.6%
School Buses	0	81	11	92	5	2	38	45	0	0	0	0	4	0	8	12	149	0.6%

TOTAL AND PEAK HOUR VOLUME DIAGRAMS

Broad River Rd AT Beatty Rd Date: 11/22/2016

12.0 HOUR TOTAL VOLUME
FROM 7:00 TO 15:00

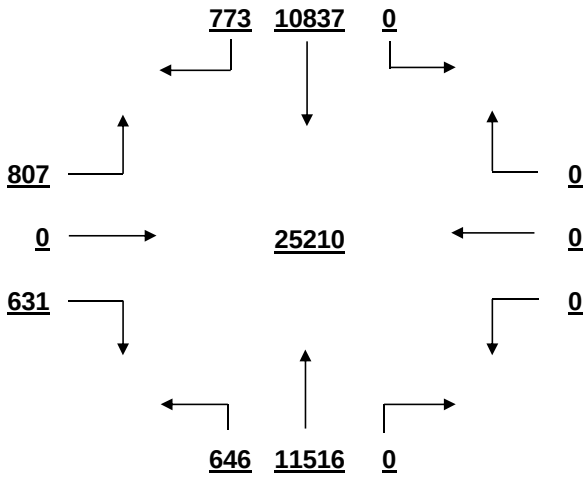

OVERALL PEAK HOUR VOLUME
FROM 16:30 TO 17:30

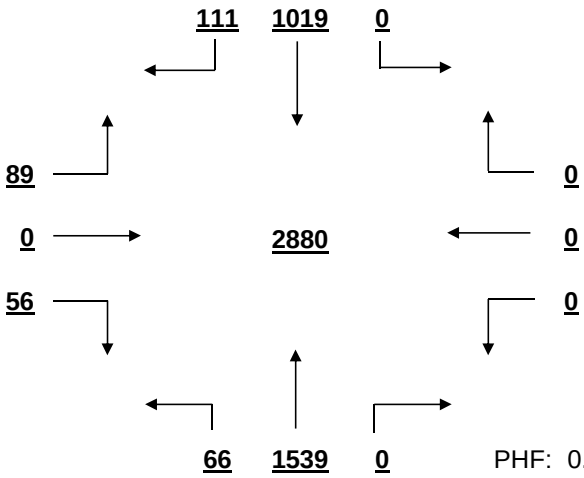

PHF: 0.960

AM PEAK HOUR VOLUME (0:00-10:45)
FROM 7:15 TO 8:15

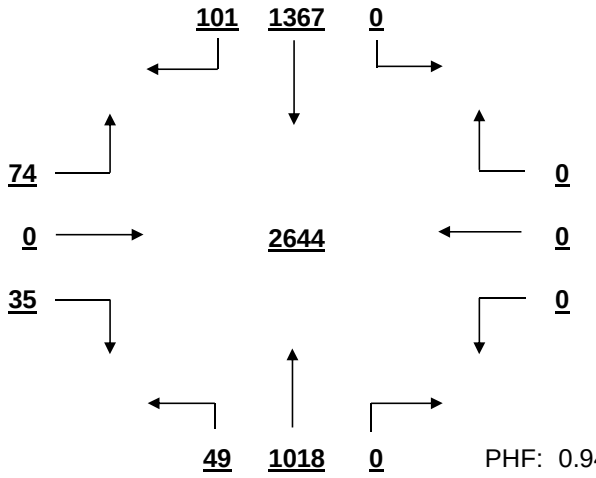

PHF: 0.944

PM PEAK HOUR VOLUME (14:15-23:45)
FROM 16:30 TO 17:30

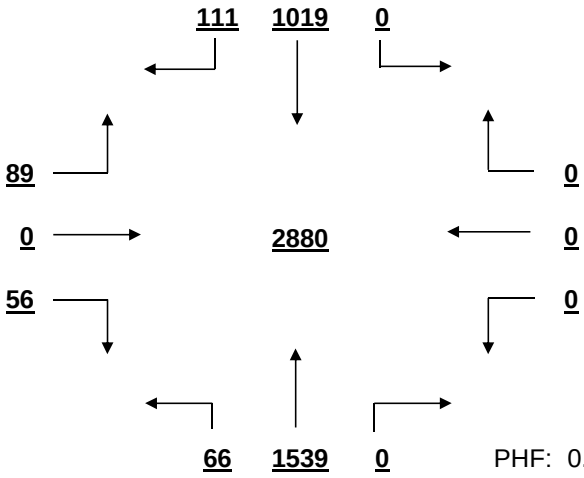

PHF: 0.960

MID-DAY PEAK HOUR VOLUME (11:00-14:00)
FROM 13:00 TO 14:00

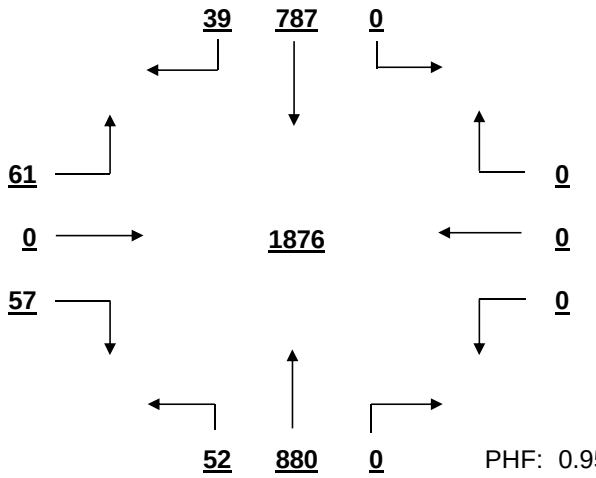

PHF: 0.959

OTHER HOUR VOLUME
FROM 7:00 TO 8:00

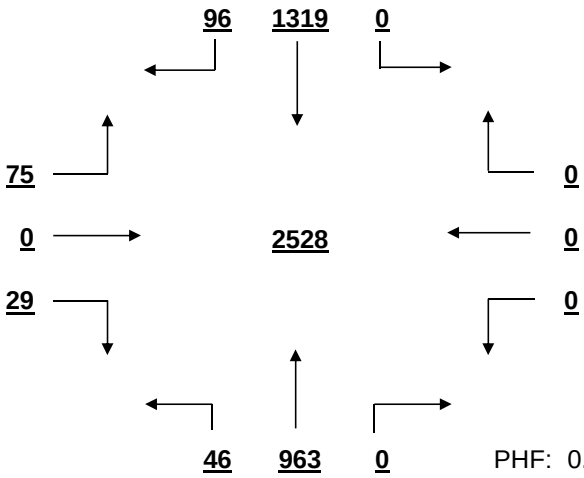

PHF: 0.903

SIGNAL WARRANT ANALYSIS

Broad River Rd AT Beatty Rd Date: 11/22/2016

Minor Street Volume, percent of total = 5.7%
Percent of Left Turns from Minor Street = 56.1%
Percent of Right Turns from Minor Street = 43.9%
Percent of Minor Street Right Turns to Remove from Warrant Analysis = 0%
WARRANT BASIS = **100%**

Warrant No. 1 - Vehicular Volume is met

Condition A - Minimum Vehicular Volume is not met

Average Major Street % of Warrant				Average Minor Street % of Warrant			
1981.0	/ 600	=	330%	119.8	/ 150	=	80%

Hourly percent of warrant

	7:00 - 8:00	8:00 - 9:00	9:00 - 10:00	10:00 - 11:00	11:00 - 12:00	12:00 - 13:00	13:00 - 14:00	14:00 - 15:00	15:00 - 16:00	16:00 - 17:00	17:00 - 18:00	18:00 - 19:00
Major St.	404%	315%	225%	228%	261%	287%	293%	333%	330%	435%	441%	410%
Minor St.	69%	71%	58%	51%	67%	77%	79%	76%	77%	93%	101%	139%

Condition B - Interruption to Continuous Traffic is met

Average Major Street % of Warrant				Average Minor Street % of Warrant			
1981.0	/ 900	=	220%	119.8	/ 75	=	160%

Hourly percent of warrant

	7:00 - 8:00	8:00 - 9:00	9:00 - 10:00	10:00 - 11:00	11:00 - 12:00	12:00 - 13:00	13:00 - 14:00	14:00 - 15:00	15:00 - 16:00	16:00 - 17:00	17:00 - 18:00	18:00 - 19:00
Major St.	269%	210%	150%	152%	174%	192%	195%	222%	220%	290%	294%	273%
Minor St.	139%	143%	116%	103%	133%	155%	157%	152%	155%	187%	201%	277%

80% Combination of Conditions A & B is not met

Warrant No. 2 - Four Hour Vehicular Volume is met

Hourly percent of warrant

	7:00 - 8:00	8:00 - 9:00	9:00 - 10:00	10:00 - 11:00	11:00 - 12:00	12:00 - 13:00	13:00 - 14:00	14:00 - 15:00	15:00 - 16:00	16:00 - 17:00	17:00 - 18:00	18:00 - 19:00
Minor St.	130%	134%	99%	96%	125%	145%	148%	143%	145%	175%	189%	260%

Warrant No. 3 - Peak Hour is met

		Percent of warrant			Percent of warrant
Overall Peak Hour:	16:30 - 17:30		Higher Volume Side Street Peak Hour:	18:00 - 19:00	
Minor St.		145%	Minor St.		208%

Warrant No. 4 - Pedestrian Volume. Pedestrian volume shown are minumum volumes assuming heavy major street traffic. If these volumes are met, warrant 4 requires further engineering analysis

S

Minimum 4 hour ped. volume crossing major street: 107

Minimum peak hour ped. volume crossing major street: 133

Number of pedestrians crossing major street

	7:00 - 8:00	8:00 - 9:00	9:00 - 10:00	10:00 - 11:00	11:00 - 12:00	12:00 - 13:00	13:00 - 14:00	14:00 - 15:00	15:00 - 16:00	16:00 - 17:00	17:00 - 18:00	18:00 - 19:00
Major t.	4	0	3	0	8	1	2	0	1	2	2	6

Warrant No. 7 - Crash Experience (Requires 3 criteria analysis by engineering)

Total Number: 0 From: 1/1/2005 to 1/1/2008

Accident Rate: 0.00 per million entering vehicles

Types of Accidents	No.	/	Avg.		No.	/	Avg.
Right Angle	0	/	0.0	Rear End	0	/	0.0
Lost Control	0	/	0.0	Side Swipe	0	/	0.0
Left Turn	0	/	0.0	Other	0	/	0.0

SOUTH CAROLINA DEPARTMENT OF TRANSPORTATION
DISTRICT 1
TRAFFIC ENGINEERING

County: Richland City: Columbia Date: 11/22/2016

Major Rt: Beatty Rd-Evelyn * Not on State System Minor Rt: Evelyn Rd-Beatty * Not on State System

Day of Week: Tuesday Weather: Clear Office: Short Counts JMS

Type of Control: Stop Sign Speed Limit (major st) 35

Direction of Minor Street: E-W Intersection ADT - 3610 (Calc)

Number of Lanes (major st)* 1 Number of Lanes (minor st)* 1

* Each Direction

INTERSECTION VOLUME SUMMARY

	From N Beatty Rd-Evelyn				From S Beatty Rd-Evelyn				From E Evelyn Rd-Beatty				From W Evelyn Rd-Beatty				Total	Total
	LT	STR	RT	TOT	LT	STR	RT	TOT	LT	STR	RT	TOT	LT	STR	RT	TOT	Vol	Peds
7:00 - 7:15	16	0	2	18	0	0	0	0	0	6	9	15	2	1	0	3	36	0
7:15 - 7:30	14	0	3	17	0	0	0	0	0	6	10	16	2	8	0	10	43	0
7:30 - 7:45	17	0	5	22	0	0	0	0	0	6	18	24	2	3	0	5	51	0
7:45 - 8:00	14	0	1	15	0	0	0	0	0	10	12	22	1	15	0	16	53	0
8:00 - 8:15	12	0	2	14	0	0	0	0	0	11	14	25	1	7	0	8	47	0
8:15 - 8:30	12	0	4	16	0	0	0	0	0	11	10	21	4	10	0	14	51	0
8:30 - 8:45	18	0	2	20	0	0	0	0	0	6	13	19	0	5	0	5	44	0
8:45 - 9:00	18	0	0	18	0	0	0	0	0	7	16	23	3	7	0	10	51	0
9:00 - 9:15	8	0	0	8	0	0	0	0	0	4	13	17	1	6	0	7	32	0
9:15 - 9:30	20	0	0	20	0	0	0	0	0	6	14	20	1	10	0	11	51	1
9:30 - 9:45	10	0	1	11	0	0	0	0	0	6	10	16	0	8	0	8	35	0
9:45 - 10:00	13	0	3	16	0	0	0	0	0	3	13	16	0	5	0	5	37	0
10:00 - 10:15	12	0	0	12	0	0	0	0	0	2	9	11	1	6	0	7	30	0
10:15 - 10:30	15	0	1	16	0	0	0	0	0	4	18	22	0	2	0	2	40	0
10:30 - 10:45	13	0	2	15	0	0	0	0	0	4	14	18	0	10	0	10	43	1
10:45 - 11:00	11	0	3	14	0	0	0	0	0	10	19	29	0	9	0	9	52	0
11:00 - 11:15	16	0	3	19	0	0	0	0	0	9	14	23	3	13	0	16	58	0
11:15 - 11:30	11	0	3	14	0	0	0	0	0	9	11	20	1	2	0	3	37	0
11:30 - 11:45	14	0	1	15	0	0	0	0	0	11	16	27	0	4	0	4	46	0
11:45 - 12:00	14	0	0	14	0	0	0	0	0	8	13	21	2	3	0	5	40	0
12:00 - 12:15	15	0	0	15	0	0	0	0	0	9	15	24	3	5	0	8	47	0
12:15 - 12:30	20	0	3	23	0	0	0	0	0	3	25	28	2	13	0	15	66	1
12:30 - 12:45	17	0	2	19	0	0	0	0	0	13	29	42	3	5	0	8	69	0
12:45 - 13:00	27	0	1	28	0	0	0	0	0	11	14	25	2	8	0	10	63	1
13:00 - 13:15	15	0	3	18	0	0	0	0	0	6	14	20	2	6	0	8	46	0
13:15 - 13:30	9	0	0	9	0	0	0	0	0	8	19	27	0	9	0	9	45	0
13:30 - 13:45	10	0	0	10	0	0	0	0	0	10	13	23	1	6	0	7	40	0
13:45 - 14:00	17	0	1	18	0	0	0	0	0	15	14	29	1	12	0	13	60	0
14:00 - 14:15	13	0	1	14	0	0	0	0	0	13	24	37	2	8	0	10	61	0
14:15 - 14:30	15	0	2	17	0	0	0	0	0	13	19	32	3	11	0	14	63	0
14:30 - 14:45	17	0	0	17	0	0	0	0	0	16	30	46	2	15	0	17	80	0
14:45 - 15:00	26	0	2	28	0	0	0	0	0	11	23	34	4	15	0	19	81	0
15:00 - 15:15	17	0	3	20	0	0	0	0	0	7	19	26	2	9	0	11	57	0
15:15 - 15:30	14	0	1	15	0	0	0	0	0	10	22	32	1	6	0	7	54	0
15:30 - 15:45	19	0	4	23	0	0	0	0	0	12	26	38	3	9	0	12	73	0
15:45 - 16:00	25	0	1	26	0	0	0	0	0	9	21	30	1	3	0	4	60	0
16:00 - 16:15	18	0	2	20	0	0	0	0	0	11	19	30	2	15	0	17	67	0
16:15 - 16:30	18	0	3	21	0	0	0	0	0	8	27	35	1	10	0	11	67	0
16:30 - 16:45	24	0	5	29	0	0	0	0	0	10	30	40	3	15	0	18	87	0
16:45 - 17:00	22	0	6	28	0	0	0	0	0	19	33	52	3	9	0	12	92	0
17:00 - 17:15	19	0	2	21	0	0	0	0	0	16	25	41	4	10	0	14	76	0
17:15 - 17:30	29	0	4	33	0	0	0	0	0	16	26	42	2	15	0	17	92	0
17:30 - 17:45	24	0	1	25	0	0	0	0	0	19	26	45	1	14	0	15	85	0
17:45 - 18:00	23	0	2	25	0	0	0	0	0	14	41	55	4	9	0	13	93	0
18:00 - 18:15	28	0	2	30	0	0	0	0	0	15	20	35	1	17	0	18	83	0
18:15 - 18:30	22	0	1	23	0	0	0	0	0	17	28	45	7	12	0	19	87	0
18:30 - 18:45	24	0	1	25	0	0	0	0	0	27	27	54	2	16	0	18	97	0
18:45 - 19:00	34	0	4	38	0	0	0	0	0	18	26	44	4	8	0	12	94	0
TOTAL	839	0	93	932	0	0	0	0	0	495	921	1416	90	424	0	514	2862	4
Trucks	15	0	1	16	0	0	0	0	0	12	10	22	6	9	0	15	53	1.9%
School Buses	3	0	1	4	0	0	0	0	0	4	5	9	5	8	0	13	26	0.9%

TOTAL AND PEAK HOUR VOLUME DIAGRAMS

Beatty Rd-Evelyn AT Evelyn Rd-Beatty Date: 11/22/2016

12.0 HOUR TOTAL VOLUME
FROM 7:00 TO 15:00

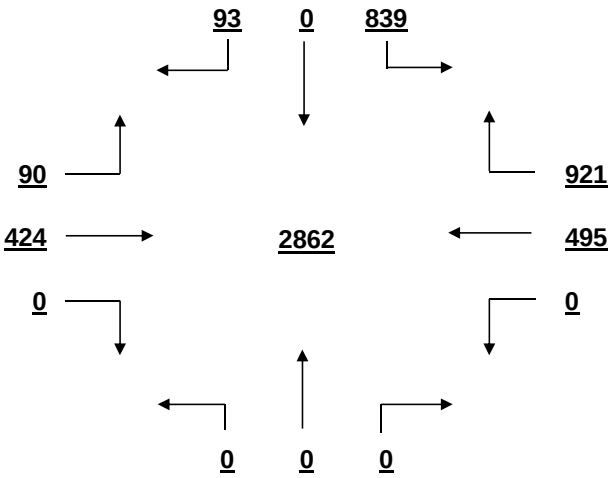

OVERALL PEAK HOUR VOLUME
FROM 18:00 TO 19:00

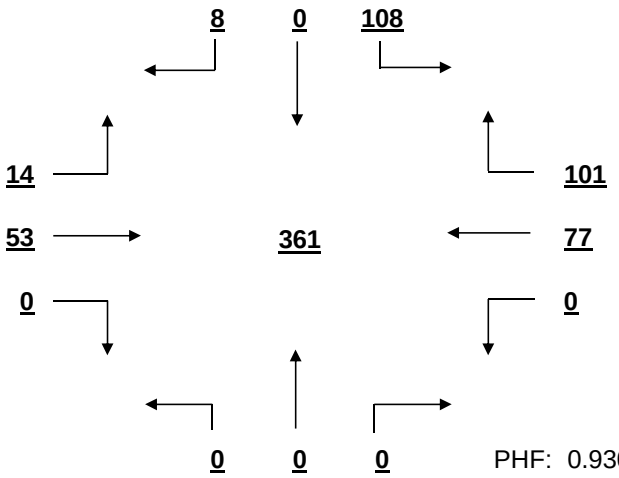

PHF: 0.930

AM PEAK HOUR VOLUME (0:00-10:45)
FROM 7:30 TO 8:30

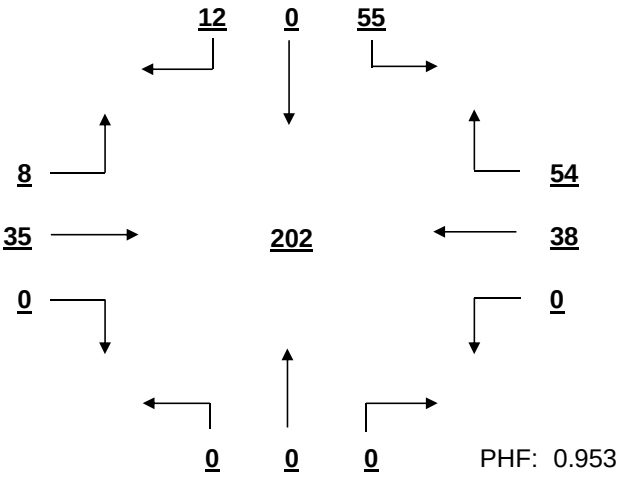

PHF: 0.953

PM PEAK HOUR VOLUME (14:15-23:45)
FROM 18:00 TO 19:00

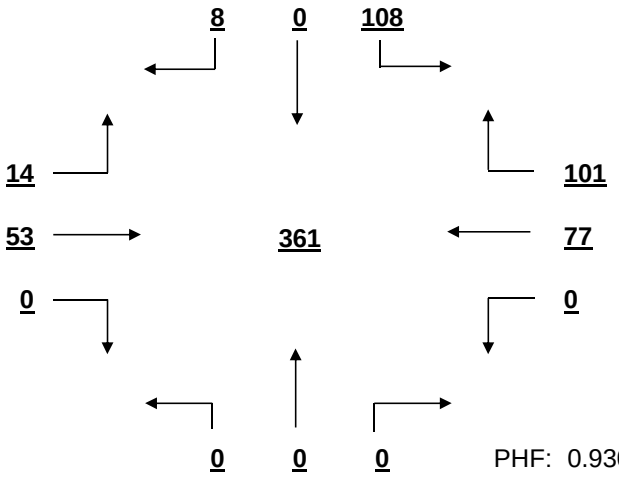

PHF: 0.930

MID-DAY PEAK HOUR VOLUME (11:00-14:00)
FROM 12:00 TO 13:00

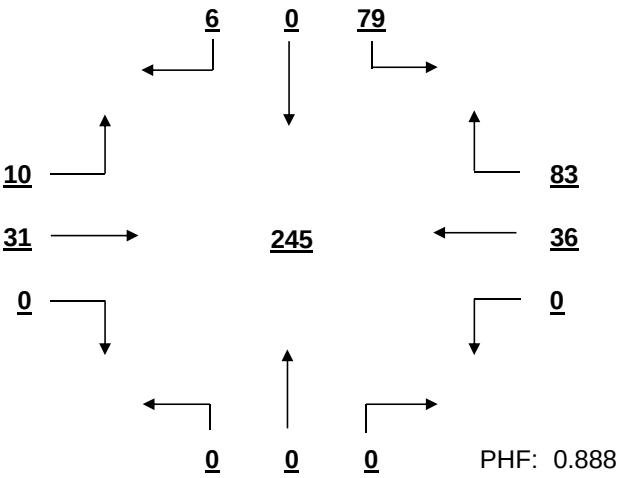

PHF: 0.888

OTHER HOUR VOLUME
FROM 7:00 TO 8:00

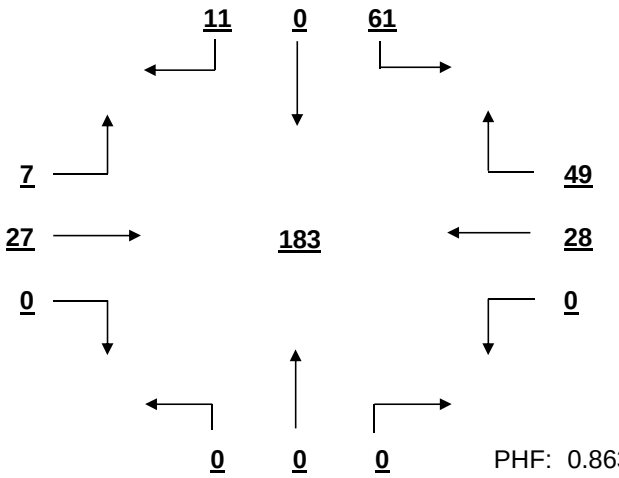

PHF: 0.863

SIGNAL WARRANT ANALYSIS

Beatty Rd-Evelyn AT Evelyn Rd-Beatty Date: 11/22/2016

Minor Street Volume, percent of total = 67.4%
Percent of Left Turns from Minor Street = 4.7%
Percent of Right Turns from Minor Street = 47.7%
Percent of Minor Street Right Turns to Remove from Warrant Analysis = 0%
WARRANT BASIS = **100%**

Warrant No. 1 - Vehicular Volume is not met

Condition A - Minimum Vehicular Volume is not met

Average Major Street % of Warrant				Average Minor Street % of Warrant			
77.7	/ 500	=	16%	118.0	/ 150	=	79%

Hourly percent of warrant

	7:00-8:00	8:00-9:00	9:00-10:00	10:00-11:00	11:00-12:00	12:00-13:00	13:00-14:00	14:00-15:00	15:00-16:00	16:00-17:00	17:00-18:00	18:00-19:00
Major St.	14%	14%	11%	11%	12%	17%	11%	15%	17%	20%	21%	23%
Minor St.	51%	59%	46%	53%	61%	79%	66%	99%	84%	105%	122%	119%

Condition B - Interruption to Continuous Traffic is not met

Average Major Street % of Warrant				Average Minor Street % of Warrant			
77.7	/ 750	=	10%	118.0	/ 75	=	157%

Hourly percent of warrant

	7:00-8:00	8:00-9:00	9:00-10:00	10:00-11:00	11:00-12:00	12:00-13:00	13:00-14:00	14:00-15:00	15:00-16:00	16:00-17:00	17:00-18:00	18:00-19:00
Major St.	10%	9%	7%	8%	8%	11%	7%	10%	11%	13%	14%	15%
Minor St.	103%	117%	92%	107%	121%	159%	132%	199%	168%	209%	244%	237%

80% Combination of Conditions A & B is not met

Warrant No. 2 - Four Hour Vehicular Volume is not met

Hourly percent of warrant

	7:00-8:00	8:00-9:00	9:00-10:00	10:00-11:00	11:00-12:00	12:00-13:00	13:00-14:00	14:00-15:00	15:00-16:00	16:00-17:00	17:00-18:00	18:00-19:00
Minor St.	16%	18%	14%	16%	18%	24%	20%	30%	26%	33%	39%	38%

Warrant No. 3 - Peak Hour is not met

	Percent of warrant		Percent of warrant
Overall Peak Hour:	18:00-19:00	Higher Volume Side Street Peak Hour:	17:45-18:45
Minor St.	26%	Minor St.	28%

Warrant No. 4 - Pedestrian Volume. Pedestrian volume shown are minumum volumes assuming heavy major street traffic. If these volumes are met, warrant 4 requires further engineering analysis

S

Minimum 4 hour ped. volume crossing major street: 107

Minimum peak hour ped. volume crossing major street: 133

Number of pedestrians crossing major street

	7:00-8:00	8:00-9:00	9:00-10:00	10:00-11:00	11:00-12:00	12:00-13:00	13:00-14:00	14:00-15:00	15:00-16:00	16:00-17:00	17:00-18:00	18:00-19:00
Major t.	0	0	1	0	0	2	0	0	0	0	0	0

Warrant No. 7 - Crash Experience (Requires 3 criteria analysis by engineering)

Total Number: 0 From: 1/1/2005 to 1/1/2008
Accident Rate: 0.00 per million entering vehicles

Types of Accidents	No.	/	Avg.		No.	/	Avg.
Right Angle	0	/	0.0	Rear End	0	/	0.0
Lost Control	0	/	0.0	Side Swipe	0	/	0.0
Left Turn	0	/	0.0	Other	0	/	0.0

SOUTH CAROLINA DEPARTMENT OF TRANSPORTATION
DISTRICT 1
TRAFFIC ENGINEERING

County: Richland City: Columbia Date: 11/21/2016

Major Rt: Fernandina Rd * Not on State System Minor Rt: Evelyn Dr * Not on State System

Day of Week: Monday Weather: Clear Office: Short Counts JMS

Type of Control: Stop Sign Speed Limit (major st) 35

Direction of Minor Street: E-W Intersection ADT - 9670 (Calc)

Number of Lanes (major st)* 1 Number of Lanes (minor st)* 1

* Each Direction

INTERSECTION VOLUME SUMMARY

	From N Fernandina Rd				From S Fernandina Rd				From E Evelyn Dr				From W Evelyn Dr				Total	Total
	LT	STR	RT	TOT	LT	STR	RT	TOT	LT	STR	RT	TOT	LT	STR	RT	TOT	Vol	Peds
7:00 - 7:15	1	27	0	28	0	24	5	29	20	0	4	24	0	0	0	0	81	1
7:15 - 7:30	0	48	0	48	0	43	10	53	13	0	3	16	0	0	0	0	117	0
7:30 - 7:45	4	101	0	105	0	70	12	82	28	0	4	32	0	0	0	0	219	0
7:45 - 8:00	4	133	0	137	0	79	9	88	16	0	10	26	0	0	0	0	251	0
8:00 - 8:15	5	123	0	128	0	75	11	86	21	0	3	24	0	0	0	0	238	0
8:15 - 8:30	4	99	0	103	0	83	9	92	7	0	2	9	0	0	0	0	204	0
8:30 - 8:45	0	94	0	94	0	57	12	69	16	0	6	22	0	0	0	0	185	0
8:45 - 9:00	3	58	0	61	0	69	10	79	12	0	7	19	0	0	0	0	159	0
9:00 - 9:15	0	37	0	37	0	54	7	61	9	0	2	11	0	0	0	0	109	0
9:15 - 9:30	4	21	0	25	0	41	3	44	5	0	6	11	0	0	0	0	80	0
9:30 - 9:45	3	27	0	30	0	45	6	51	5	0	5	10	0	0	0	0	91	0
9:45 - 10:00	0	0	0	0	0	0	0	0	0	0	0	0	0	0	0	0	0	0
10:00 - 10:15	1	36	0	37	0	43	7	50	5	0	5	10	0	0	0	0	97	0
10:15 - 10:30	5	22	0	27	0	35	8	43	8	0	7	15	0	0	0	0	85	0
10:30 - 10:45	3	34	0	37	0	41	4	45	6	0	4	10	0	0	0	0	92	0
10:45 - 11:00	3	38	0	41	0	29	3	32	11	0	5	16	0	0	0	0	89	0
11:00 - 11:15	2	34	0	36	0	39	9	48	4	0	9	13	0	0	0	0	97	0
11:15 - 11:30	5	49	0	54	0	54	8	62	9	0	1	10	0	0	0	0	126	0
11:30 - 11:45	3	49	0	52	0	53	8	61	6	0	3	9	0	0	0	0	122	0
11:45 - 12:00	7	36	0	43	0	47	9	56	14	0	5	19	0	0	0	0	118	0
12:00 - 12:15	3	64	0	67	0	49	4	53	11	0	12	23	0	0	0	0	143	0
12:15 - 12:30	6	59	0	65	0	65	12	77	8	0	3	11	0	0	0	0	153	0
12:30 - 12:45	3	50	0	53	0	75	7	82	11	0	6	17	0	0	0	0	152	0
12:45 - 13:00	6	54	0	60	0	52	10	62	12	0	2	14	0	0	0	0	136	0
13:00 - 13:15	5	37	0	42	0	67	11	78	3	0	3	6	0	0	0	0	126	0
13:15 - 13:30	5	61	0	66	0	46	7	53	5	0	3	8	0	0	0	0	127	0
13:30 - 13:45	0	0	0	0	0	0	0	0	0	0	0	0	0	0	0	0	0	0
13:45 - 14:00	2	57	0	59	0	60	9	69	9	0	10	19	0	0	0	0	147	1
14:00 - 14:15	6	50	0	56	0	52	7	59	8	0	2	10	0	0	0	0	125	0
14:15 - 14:30	2	46	0	48	0	46	8	54	5	0	6	11	0	0	0	0	113	0
14:30 - 14:45	4	46	0	50	0	52	7	59	13	0	11	24	0	0	0	0	133	0
14:45 - 15:00	5	31	0	36	0	53	28	81	11	0	9	20	0	0	0	0	137	0
15:00 - 15:15	14	11	0	25	0	29	101	130	16	0	2	18	0	0	0	0	173	0
15:15 - 15:30	15	4	0	19	0	11	139	150	21	0	3	24	0	0	0	0	193	0
15:30 - 15:45	6	29	0	35	0	66	91	157	31	0	6	37	0	0	0	0	229	1
15:45 - 16:00	3	61	0	64	0	147	6	153	15	0	5	20	0	0	0	0	237	0
16:00 - 16:15	12	55	0	67	0	156	11	167	13	0	9	22	0	0	0	0	256	0
16:15 - 16:30	1	62	0	63	0	127	15	142	13	0	6	19	0	0	0	0	224	0
16:30 - 16:45	5	90	0	95	0	93	15	108	12	0	10	22	0	0	0	0	225	0
16:45 - 17:00	4	83	0	87	0	98	11	109	8	0	10	18	0	0	0	0	214	0
17:00 - 17:15	9	125	0	134	0	118	12	130	19	0	8	27	0	0	0	0	291	0
17:15 - 17:30	6	83	0	89	0	112	19	131	9	0	8	17	0	0	0	0	237	0
17:30 - 17:45	7	61	0	68	0	119	19	138	5	0	4	9	0	0	0	0	215	0
17:45 - 18:00	6	55	0	61	0	114	14	128	11	0	7	18	0	0	0	0	207	0
18:00 - 18:15	10	47	0	57	0	98	25	123	10	0	5	15	0	0	0	0	195	0
18:15 - 18:30	9	28	0	37	0	71	15	86	14	0	11	25	0	0	0	0	148	0
18:30 - 18:45	8	42	0	50	0	42	12	54	16	0	6	22	0	0	0	0	126	0
18:45 - 19:00	5	25	0	30	0	18	12	30	8	0	4	12	0	0	0	0	72	0
TOTAL	224	2482	0	2706	0	3017	777	3794	532	0	262	794	0	0	0	0	7294	3
Trucks	0	16	0	16	0	19	11	30	2	0	0	2	0	0	0	0	48	0.7%
School Buses	1	6	0	7	0	12	13	25	7	0	1	8	0	0	0	0	40	0.5%

TOTAL AND PEAK HOUR VOLUME DIAGRAMS

Fernandina Rd AT Evelyn Dr Date: 11/21/2016

12.0 HOUR TOTAL VOLUME
FROM 7:00 TO 15:00

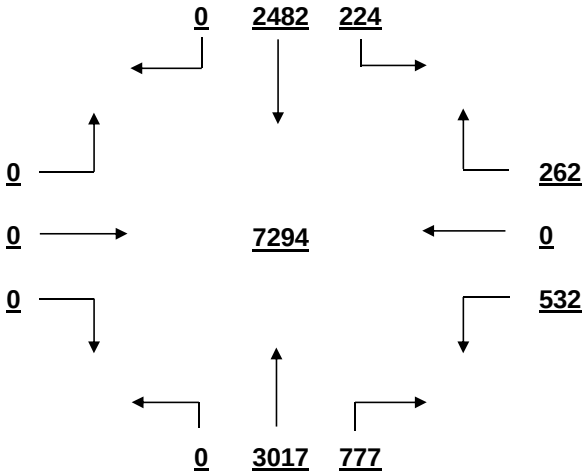

OVERALL PEAK HOUR VOLUME
FROM 16:30 TO 17:30

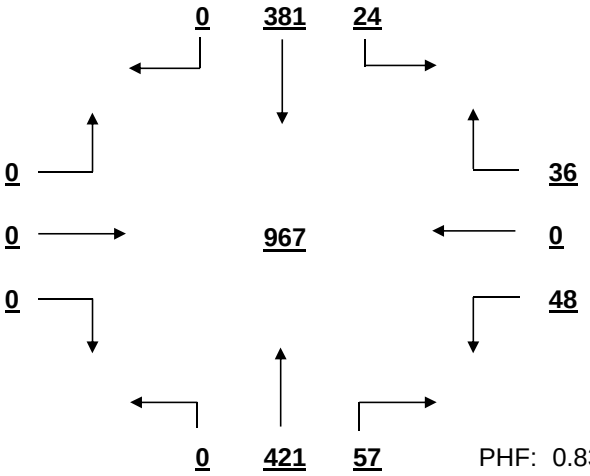

PHF: 0.831

AM PEAK HOUR VOLUME (0:00-10:45)
FROM 7:30 TO 8:30

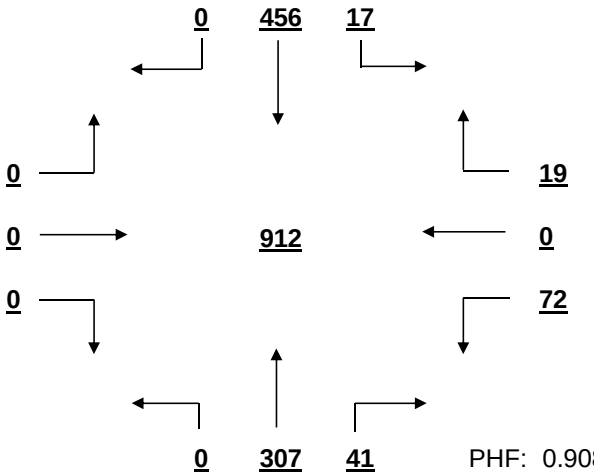

PHF: 0.908

PM PEAK HOUR VOLUME (14:15-23:45)
FROM 16:30 TO 17:30

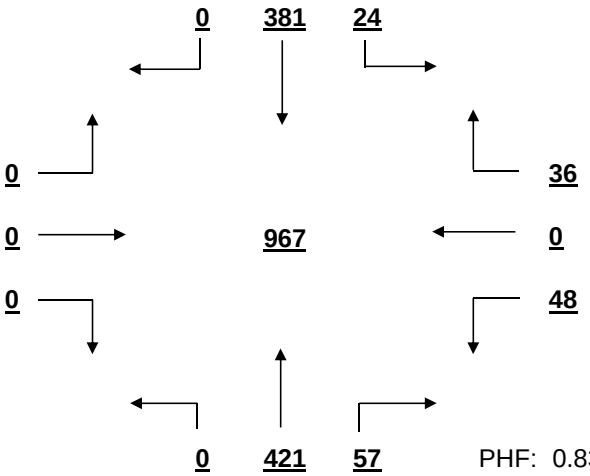

PHF: 0.831

MID-DAY PEAK HOUR VOLUME (11:00-14:00)
FROM 12:00 TO 13:00

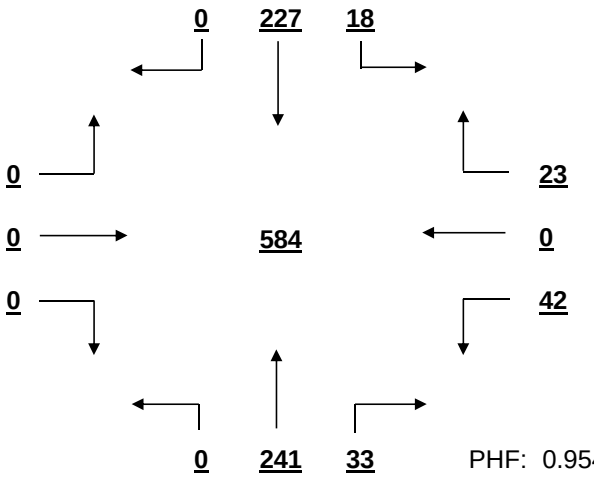

PHF: 0.954

OTHER HOUR VOLUME
FROM 7:00 TO 8:00

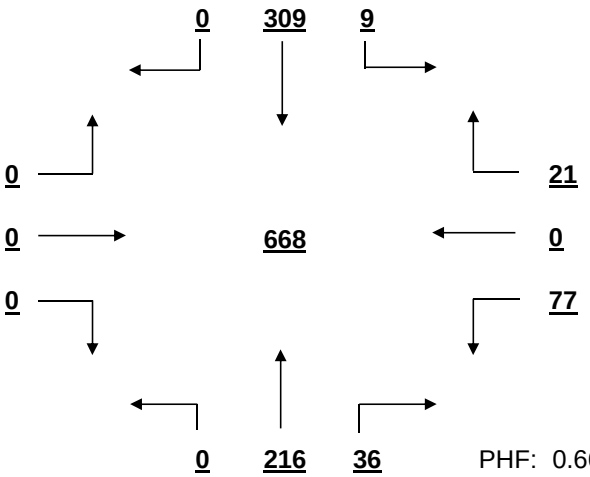

PHF: 0.665

SIGNAL WARRANT ANALYSIS

Fernandina Rd AT Evelyn Dr Date: 11/21/2016

Minor Street Volume, percent of total = 10.9%
Percent of Left Turns from Minor Street = 67.0%
Percent of Right Turns from Minor Street = 33.0%
Percent of Minor Street Right Turns to Remove from Warrant Analysis = 0%
WARRANT BASIS = **100%**

Warrant No. 1 - Vehicular Volume is not met

Condition A - Minimum Vehicular Volume is not met

Average Major Street % of Warrant	Average Minor Street % of Warrant
541.7 / 500 = 108%	66.2 / 150 = 44%

Hourly percent of warrant

	7:00 - 8:00	8:00 - 9:00	9:00 - 10:00	10:00 - 11:00	11:00 - 12:00	12:00 - 13:00	13:00 - 14:00	14:00 - 15:00	15:00 - 16:00	16:00 - 17:00	17:00 - 18:00	18:00 - 19:00
Major St.	114%	142%	50%	62%	82%	104%	73%	89%	147%	168%	176%	93%
Minor St.	65%	49%	21%	34%	34%	43%	22%	43%	66%	54%	47%	49%

Condition B - Interruption to Continuous Traffic is not met

Average Major Street % of Warrant	Average Minor Street % of Warrant
541.7 / 750 = 72%	66.2 / 75 = 88%

Hourly percent of warrant

	7:00 - 8:00	8:00 - 9:00	9:00 - 10:00	10:00 - 11:00	11:00 - 12:00	12:00 - 13:00	13:00 - 14:00	14:00 - 15:00	15:00 - 16:00	16:00 - 17:00	17:00 - 18:00	18:00 - 19:00
Major St.	76%	95%	33%	42%	55%	69%	49%	59%	98%	112%	117%	62%
Minor St.	131%	99%	43%	68%	68%	87%	44%	87%	132%	108%	95%	99%

80% Combination of Conditions A & B is not met

Warrant No. 2 - Four Hour Vehicular Volume is not met

Hourly percent of warrant

	7:00 - 8:00	8:00 - 9:00	9:00 - 10:00	10:00 - 11:00	11:00 - 12:00	12:00 - 13:00	13:00 - 14:00	14:00 - 15:00	15:00 - 16:00	16:00 - 17:00	17:00 - 18:00	18:00 - 19:00
Minor St.	42%	42%	8%	14%	17%	26%	10%	23%	58%	59%	56%	27%

Warrant No. 3 - Peak Hour is not met

Overall Peak Hour: 16:30 - 17:30 — Percent of warrant
Minor St. 34%

Higher Volume Side Street Peak Hour: 15:15 - 16:15 — Percent of warrant
Minor St. 38%

Warrant No. 4 - Pedestrian Volume. Pedestrian volume shown are minumum volumes assuming heavy major street traffic. If these volumes are met, warrant 4 requires further engineering analysis

S

Minimum 4 hour ped. volume crossing major street: 107

Minimum peak hour ped. volume crossing major street: 133

Number of pedestrians crossing major street

	7:00 - 8:00	8:00 - 9:00	9:00 - 10:00	10:00 - 11:00	11:00 - 12:00	12:00 - 13:00	13:00 - 14:00	14:00 - 15:00	15:00 - 16:00	16:00 - 17:00	17:00 - 18:00	18:00 - 19:00
Major t.	1	0	0	0	0	0	1	0	1	0	0	0

Warrant No. 7 - Crash Experience (Requires 3 criteria analysis by engineering)

Total Number: 0 From: 1/1/2005 to 1/1/2008
Accident Rate: 0.00 per million entering vehicles

Types of Accidents	No.	/	Avg.		No.	/	Avg.
Right Angle	0	/	0.0	Rear End	0	/	0.0
Lost Control	0	/	0.0	Side Swipe	0	/	0.0
Left Turn	0	/	0.0	Other	0	/	0.0

SOUTH CAROLINA DEPARTMENT OF TRANSPORTATION
DISTRICT 1
TRAFFIC ENGINEERING

County: Richland City: Columbia Date: 11/28/2016

Major Rt: St. Andrews Rd * Not on State System Minor Rt: Sidney Rd * Not on State System

Day of Week: Monday Weather: Clear Office: Short Counts JMS

Type of Control: Signal Speed Limit (major st) 40

Direction of Minor Street: N-S Intersection ADT - 17170 (Calc)

Number of Lanes (major st)* 2 Number of Lanes (minor st)* 1 * Each Direction

INTERSECTION VOLUME SUMMARY

	From N Sidney Rd				From S Sidney Rd				From E St. Andrews Rd				From W St. Andrews Rd				Total	Total
	LT	STR	RT	TOT	LT	STR	RT	TOT	LT	STR	RT	TOT	LT	STR	RT	TOT	Vol	Peds
7:00 - 7:15	32	0	4	36	0	0	0	0	0	57	7	64	2	167	0	169	269	0
7:15 - 7:30	40	0	2	42	0	0	0	0	0	85	15	100	3	210	0	213	355	0
7:30 - 7:45	44	0	7	51	0	0	0	0	0	100	19	119	0	263	0	263	433	0
7:45 - 8:00	30	0	3	33	0	0	0	0	0	112	11	123	6	260	0	266	422	0
8:00 - 8:15	24	0	2	26	0	0	0	0	0	89	9	98	2	241	0	243	367	0
8:15 - 8:30	24	0	0	24	0	0	0	0	0	80	11	91	0	197	0	197	312	0
8:30 - 8:45	24	0	0	24	0	0	0	0	0	81	7	88	1	183	0	184	296	0
8:45 - 9:00	21	0	3	24	0	0	0	0	0	100	13	113	2	146	0	148	285	0
9:00 - 9:15	16	0	3	19	0	0	0	0	0	88	10	98	4	147	0	151	268	0
9:15 - 9:30	17	0	2	19	0	0	0	0	0	80	6	86	1	166	0	167	272	0
9:30 - 9:45	8	0	6	14	0	0	0	0	0	90	14	104	1	96	0	97	215	0
9:45 - 10:00	12	0	6	18	0	0	0	0	0	97	11	108	1	101	0	102	228	0
10:00 - 10:15	10	0	0	10	0	0	0	0	0	94	10	104	3	113	0	116	230	0
10:15 - 10:30	13	0	6	19	0	0	0	0	0	90	10	100	4	116	0	120	239	0
10:30 - 10:45	12	0	3	15	0	0	0	0	0	92	15	107	3	112	0	115	237	0
10:45 - 11:00	17	0	4	21	0	0	0	0	0	98	6	104	1	108	0	109	234	0
11:00 - 11:15	13	0	4	17	0	0	0	0	0	101	13	114	1	106	0	107	238	0
11:15 - 11:30	18	0	6	24	0	0	0	0	0	96	16	112	1	105	0	106	242	0
11:30 - 11:45	15	0	2	17	0	0	0	0	0	118	11	129	8	110	0	118	264	0
11:45 - 12:00	13	0	4	17	0	0	0	0	0	116	13	129	4	125	0	129	275	0
12:00 - 12:15	11	0	7	18	0	0	0	0	0	120	11	131	3	130	0	133	282	0
12:15 - 12:30	14	0	2	16	0	0	0	0	0	132	15	147	4	138	0	142	305	0
12:30 - 12:45	20	0	2	22	0	0	0	0	0	128	20	148	2	151	0	153	323	0
12:45 - 13:00	15	0	4	19	0	0	0	0	0	115	14	129	4	141	0	145	293	0
13:00 - 13:15	13	0	4	17	0	0	0	0	0	119	15	134	5	134	0	139	290	3
13:15 - 13:30	19	0	5	24	0	0	0	0	0	123	14	137	4	145	0	149	310	0
13:30 - 13:45	15	0	6	21	0	0	0	0	0	122	15	137	4	135	0	139	297	0
13:45 - 14:00	21	0	5	26	0	0	0	0	0	118	12	130	1	129	0	130	286	0
14:00 - 14:15	12	0	6	18	0	0	0	0	0	109	13	122	1	132	0	133	273	0
14:15 - 14:30	20	0	2	22	0	0	0	0	0	138	12	150	2	115	0	117	289	0
14:30 - 14:45	12	0	4	16	0	0	0	0	0	125	13	138	5	129	0	134	288	0
14:45 - 15:00	17	0	6	23	0	0	0	0	0	121	17	138	4	130	0	134	295	0
15:00 - 15:15	21	0	6	27	0	0	0	0	0	158	9	167	3	167	0	170	364	1
15:15 - 15:30	16	0	3	19	0	0	0	0	0	138	20	158	3	115	0	118	295	0
15:30 - 15:45	16	0	5	21	0	0	0	0	0	143	13	156	6	141	0	147	324	0
15:45 - 16:00	11	0	4	15	0	0	0	0	0	153	18	171	6	145	0	151	337	0
16:00 - 16:15	17	0	5	22	0	0	0	0	0	154	26	180	6	148	0	154	356	0
16:15 - 16:30	21	0	7	28	0	0	0	0	0	171	15	186	1	137	0	138	352	1
16:30 - 16:45	14	0	6	20	0	0	0	0	0	176	26	202	6	120	0	126	348	0
16:45 - 17:00	24	0	2	26	0	0	0	0	0	205	23	228	3	134	0	137	391	0
17:00 - 17:15	20	0	3	23	0	0	0	0	0	229	3	232	5	170	0	175	430	0
17:15 - 17:30	20	0	6	26	0	0	0	0	0	254	20	274	4	162	0	166	466	0
17:30 - 17:45	20	0	5	25	0	0	0	0	0	236	18	254	3	118	0	121	400	0
17:45 - 18:00	19	0	3	22	0	0	0	0	0	217	34	251	4	144	0	148	421	0
18:00 - 18:15	14	0	4	18	0	0	0	0	0	152	31	183	5	135	0	140	341	1
18:15 - 18:30	14	0	3	17	0	0	0	0	0	174	25	199	5	93	0	98	314	0
18:30 - 18:45	9	0	5	14	0	0	0	0	0	135	20	155	4	91	0	95	264	0
18:45 - 19:00	13	0	4	17	0	0	0	0	0	109	13	122	2	80	0	82	221	0
TOTAL	861	0	191	1052	0	0	0	0	0	6138	712	6850	153	6781	0	6934	14836	6
Trucks	4	0	1	5	0	0	0	0	0	103	2	105	0	109	0	109	219	1.5%
School Buses	3	0	3	6	0	0	0	0	0	28	7	35	2	26	0	28	69	0.5%

TOTAL AND PEAK HOUR VOLUME DIAGRAMS

St. Andrews Rd AT Sidney Rd Date: 11/28/2016

12.0 HOUR TOTAL VOLUME
FROM 7:00 TO 15:00

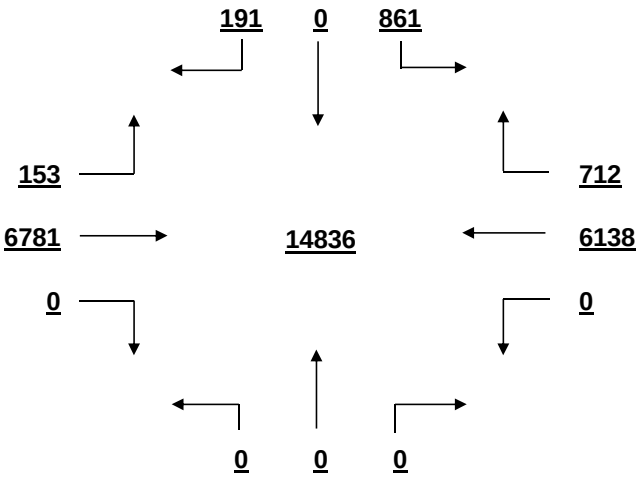

OVERALL PEAK HOUR VOLUME
FROM 17:00 TO 18:00

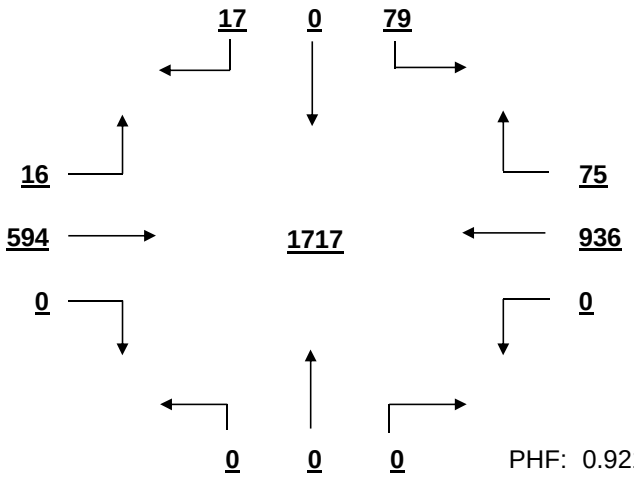

PHF: 0.921

AM PEAK HOUR VOLUME (0:00-10:45)
FROM 7:15 TO 8:15

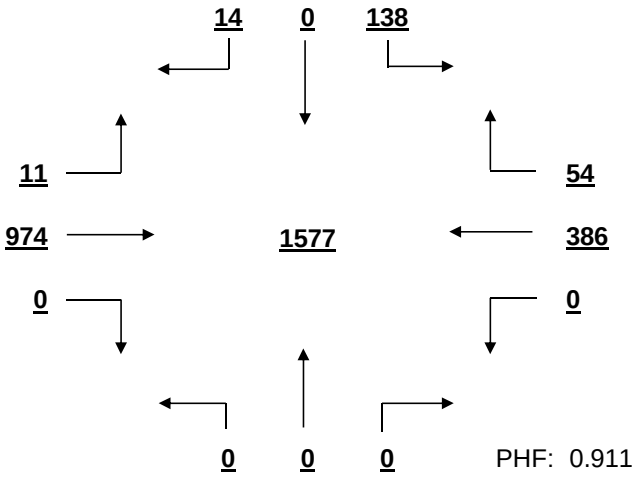

PHF: 0.911

PM PEAK HOUR VOLUME (14:15-23:45)
FROM 17:00 TO 18:00

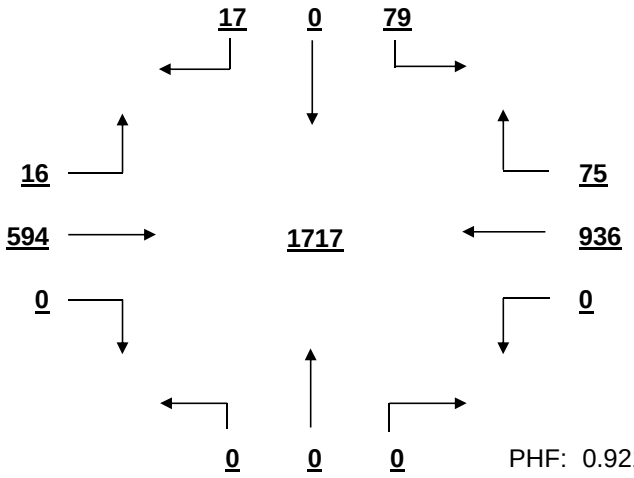

PHF: 0.921

MID-DAY PEAK HOUR VOLUME (11:00-14:00)
FROM 12:30 TO 13:30

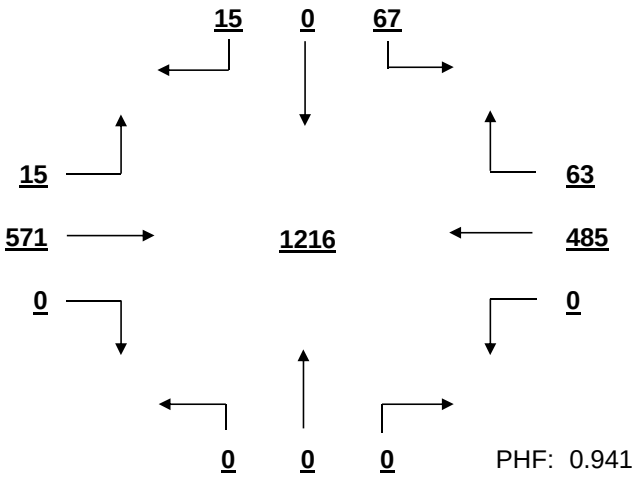

PHF: 0.941

OTHER HOUR VOLUME
FROM 7:00 TO 8:00

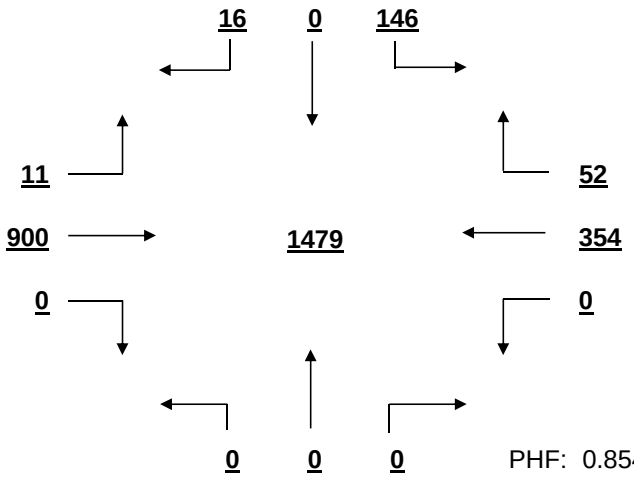

PHF: 0.854

SIGNAL WARRANT ANALYSIS

St. Andrews Rd AT Sidney Rd Date: 11/28/2016

Minor Street Volume, percent of total = 7.1%
Percent of Left Turns from Minor Street = 81.8%
Percent of Right Turns from Minor Street = 18.2%
Percent of Minor Street Right Turns to Remove from Warrant Analysis = 0%
WARRANT BASIS = **100%**

Warrant No. 1 - Vehicular Volume is met

Condition A - Minimum Vehicular Volume is not met

Average Major Street % of Warrant				Average Minor Street % of Warrant			
1148.7	/ 600 =	191%		87.7	/ 150 =	58%	

Hourly percent of warrant

	7:00 - 8:00	8:00 - 9:00	9:00 - 10:00	10:00 - 11:00	11:00 - 12:00	12:00 - 13:00	13:00 - 14:00	14:00 - 15:00	15:00 - 16:00	16:00 - 17:00	17:00 - 18:00	18:00 - 19:00
Major St.	220%	194%	152%	146%	157%	188%	183%	178%	206%	225%	270%	179%
Minor St.	108%	65%	47%	43%	50%	50%	59%	53%	55%	64%	64%	44%

Condition B - Interruption to Continuous Traffic is met

Average Major Street % of Warrant				Average Minor Street % of Warrant			
1148.7	/ 900 =	128%		87.7	/ 75 =	117%	

Hourly percent of warrant

	7:00 - 8:00	8:00 - 9:00	9:00 - 10:00	10:00 - 11:00	11:00 - 12:00	12:00 - 13:00	13:00 - 14:00	14:00 - 15:00	15:00 - 16:00	16:00 - 17:00	17:00 - 18:00	18:00 - 19:00
Major St.	146%	129%	101%	97%	105%	125%	122%	118%	138%	150%	180%	119%
Minor St.	216%	131%	93%	87%	100%	100%	117%	105%	109%	128%	128%	88%

80% Combination of Conditions A & B is not met

Warrant No. 2 - Four Hour Vehicular Volume is not met

Hourly percent of warrant

	7:00 - 8:00	8:00 - 9:00	9:00 - 10:00	10:00 - 11:00	11:00 - 12:00	12:00 - 13:00	13:00 - 14:00	14:00 - 15:00	15:00 - 16:00	16:00 - 17:00	17:00 - 18:00	18:00 - 19:00
Minor St.	179%	90%	42%	36%	47%	65%	72%	62%	83%	120%	120%	52%

Warrant No. 3 - Peak Hour is not met

Percent of warrant
Overall Peak Hour: 17:00 - 18:00
Minor St. 83%

Percent of warrant
Higher Volume Side Street Peak Hour: 7:00 - 8:00
Minor St. 90%

Warrant No. 4 - Pedestrian Volume. Pedestrian volume shown are minumum volumes assuming heavy major street traffic. If these volumes are met, warrant 4 requires further engineering analysis

S

Minimum 4 hour ped. volume crossing major street: 107

Minimum peak hour ped. volume crossing major street: 133

Number of pedestrians crossing major street

	7:00 - 8:00	8:00 - 9:00	9:00 - 10:00	10:00 - 11:00	11:00 - 12:00	12:00 - 13:00	13:00 - 14:00	14:00 - 15:00	15:00 - 16:00	16:00 - 17:00	17:00 - 18:00	18:00 - 19:00
Major t.	0	0	0	0	0	0	0	0	0	0	0	0

Warrant No. 7 - Crash Experience (Requires 3 criteria analysis by engineering)

Total Number: 0 From: 1/1/2005 to 1/1/2008
Accident Rate: 0.00 per million entering vehicles

Types of Accidents	No.	/	Avg.		No.	/	Avg.
Right Angle	0	/	0.0	Rear End	0	/	0.0
Lost Control	0	/	0.0	Side Swipe	0	/	0.0
Left Turn	0	/	0.0	Other	0	/	0.0

SOUTH CAROLINA DEPARTMENT OF TRANSPORTATION
DISTRICT 1
TRAFFIC ENGINEERING

County: Richland City: Columbia Date: 11/28/2016

Major Rt: St. Andrews Rd * Not on State System Minor Rt: Ashland Rd * Not on State System

Day of Week: Monday Weather: Clear Office: Short Counts JMS

Type of Control: Signal Speed Limit (major st) 40

Direction of Minor Street: N-S Intersection ADT - 21960 (Calc)

Number of Lanes (major st)* 2 Number of Lanes (minor st)* 1 * Each Direction

INTERSECTION VOLUME SUMMARY

	From N Ashland Rd				From S Ashland Rd				From E St. Andrews Rd				From W St. Andrews Rd				Total	Total
	LT	STR	RT	TOT	LT	STR	RT	TOT	LT	STR	RT	TOT	LT	STR	RT	TOT	Vol	Peds
7:00 - 7:15	0	0	0	0	10	0	26	36	27	69	0	96	0	181	31	212	344	4
7:15 - 7:30	0	0	0	0	32	1	49	82	37	84	0	121	0	220	49	269	472	2
7:30 - 7:45	0	0	0	0	37	0	65	102	42	93	0	135	1	271	47	319	556	2
7:45 - 8:00	0	0	0	0	23	0	45	68	17	121	0	138	0	262	29	291	497	1
8:00 - 8:15	0	0	0	0	15	0	33	48	21	111	1	133	0	259	26	285	466	1
8:15 - 8:30	0	0	0	0	14	0	39	53	25	107	0	132	1	224	14	239	424	7
8:30 - 8:45	0	0	0	0	10	0	16	26	17	90	0	107	0	189	17	206	339	0
8:45 - 9:00	0	0	0	0	17	0	21	38	16	118	0	134	1	161	10	172	344	2
9:00 - 9:15	0	0	0	0	20	0	23	43	15	93	0	108	0	153	15	168	319	1
9:15 - 9:30	1	0	0	1	13	0	20	33	13	97	0	110	0	115	16	131	275	6
9:30 - 9:45	0	0	1	1	15	0	24	39	12	110	0	122	1	127	11	139	301	5
9:45 - 10:00	0	0	0	0	12	0	12	24	8	117	0	125	0	113	5	118	267	0
10:00 - 10:15	0	0	1	1	12	0	19	31	7	124	0	131	0	112	14	126	289	1
10:15 - 10:30	0	0	0	0	17	0	27	44	17	104	0	121	0	138	15	153	318	6
10:30 - 10:45	1	0	0	1	16	0	10	26	12	111	0	123	1	119	8	128	278	0
10:45 - 11:00	1	0	1	2	19	0	23	42	7	112	0	119	0	133	11	144	307	5
11:00 - 11:15	0	0	0	0	11	0	17	28	14	128	0	142	0	129	10	139	309	0
11:15 - 11:30	0	0	0	0	20	0	18	38	10	142	0	152	3	126	17	146	336	4
11:30 - 11:45	0	0	2	2	19	0	21	40	11	136	1	148	0	150	25	175	365	4
11:45 - 12:00	0	0	0	0	22	0	28	50	26	145	0	171	0	146	18	164	385	2
12:00 - 12:15	0	0	2	2	26	0	29	55	18	146	0	164	0	151	22	173	394	8
12:15 - 12:30	1	0	1	2	35	0	19	54	33	161	0	194	0	171	20	191	441	5
12:30 - 12:45	0	0	0	0	18	0	29	47	22	171	1	194	0	174	25	199	440	5
12:45 - 13:00	0	0	0	0	22	0	28	50	25	150	0	175	0	169	23	192	417	8
13:00 - 13:15	0	1	0	1	26	0	26	52	23	152	0	175	0	170	19	189	417	2
13:15 - 13:30	0	0	0	0	31	0	27	58	21	147	0	168	1	192	21	214	440	2
13:30 - 13:45	0	0	0	0	28	0	37	65	20	157	1	178	0	161	27	188	431	2
13:45 - 14:00	0	1	0	1	18	1	29	48	26	161	0	187	0	159	21	180	416	6
14:00 - 14:15	0	0	0	0	11	0	33	44	21	130	1	152	0	164	19	183	379	2
14:15 - 14:30	0	1	0	1	22	0	25	47	20	163	0	183	0	141	29	170	401	4
14:30 - 14:45	0	0	0	0	29	0	30	59	19	154	0	173	0	148	21	169	401	5
14:45 - 15:00	1	3	1	5	30	1	45	76	33	144	0	177	0	153	19	172	430	2
15:00 - 15:15	1	0	0	1	33	0	29	62	23	172	0	195	0	202	17	219	477	8
15:15 - 15:30	0	3	0	3	28	0	27	55	22	163	0	185	0	141	24	165	408	0
15:30 - 15:45	0	1	0	1	32	0	29	61	28	200	0	228	0	181	15	196	486	4
15:45 - 16:00	0	0	0	0	23	0	26	49	27	194	0	221	2	166	18	186	456	2
16:00 - 16:15	0	1	0	1	36	0	34	70	21	182	0	203	0	186	19	205	479	10
16:15 - 16:30	1	2	0	3	30	0	35	65	23	185	0	208	0	166	30	196	472	4
16:30 - 16:45	0	1	0	1	30	0	23	53	31	218	0	249	0	139	20	159	462	3
16:45 - 17:00	0	1	0	1	35	0	32	67	26	238	0	264	0	177	30	207	539	1
17:00 - 17:15	1	0	2	3	36	0	39	75	27	215	0	242	0	188	27	215	535	6
17:15 - 17:30	0	1	0	1	41	0	36	77	17	291	0	308	1	183	29	213	599	7
17:30 - 17:45	3	1	0	4	36	0	31	67	41	249	0	290	1	148	13	162	523	1
17:45 - 18:00	0	0	1	1	42	0	39	81	20	218	0	238	0	161	21	182	502	1
18:00 - 18:15	1	0	2	3	25	0	33	58	15	182	0	197	0	159	13	172	430	1
18:15 - 18:30	0	2	0	2	21	1	26	48	25	218	0	243	0	136	12	148	441	0
18:30 - 18:45	0	0	0	0	23	0	24	47	20	181	0	201	0	126	12	138	386	3
18:45 - 19:00	0	0	0	0	16	0	18	34	12	142	0	154	0	116	15	131	319	2
TOTAL	12	19	14	45	1137	4	1374	2515	1013	7296	5	8314	13	7856	969	8838	19712	157
Trucks	0	0	0	0	3	0	11	14	10	122	1	133	0	139	6	145	292	1.5%
School Buses	1	17	0	18	9	0	5	14	2	13	0	15	0	27	11	38	85	0.4%

TOTAL AND PEAK HOUR VOLUME DIAGRAMS

St. Andrews Rd AT Ashland Rd Date: 11/28/2016

12.0 HOUR TOTAL VOLUME
FROM 7:00 TO 15:00

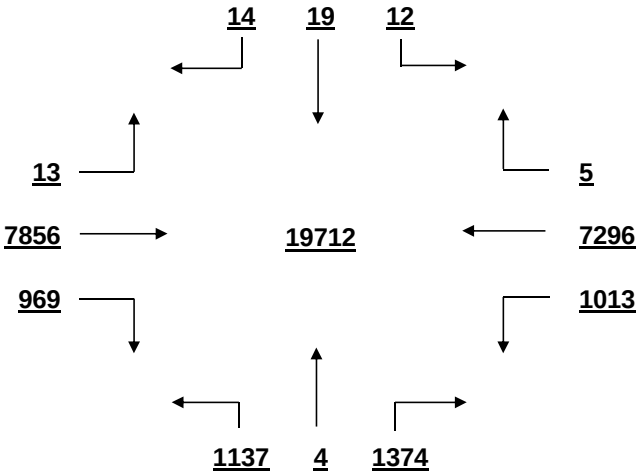

OVERALL PEAK HOUR VOLUME
FROM 16:45 TO 17:45

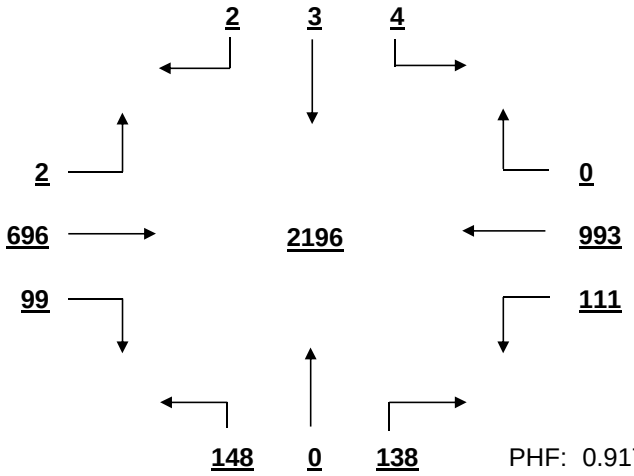

PHF: 0.917

AM PEAK HOUR VOLUME (0:00-10:45)
FROM 7:15 TO 8:15

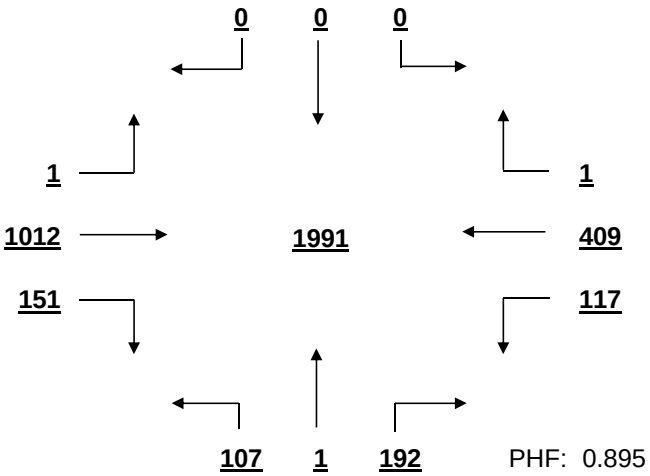

PHF: 0.895

PM PEAK HOUR VOLUME (14:15-23:45)
FROM 16:45 TO 17:45

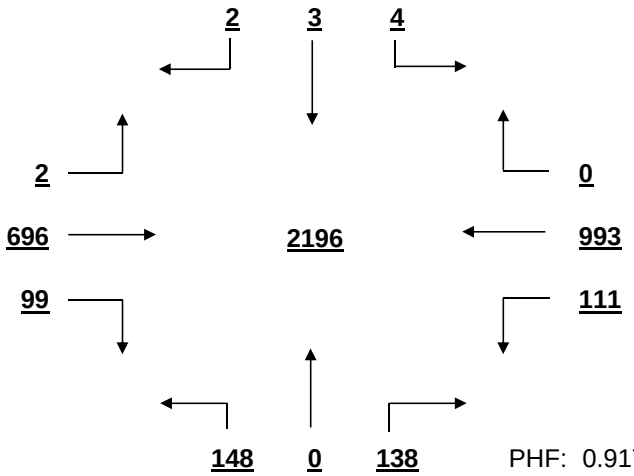

PHF: 0.917

MID-DAY PEAK HOUR VOLUME (11:00-14:00)
FROM 12:15 TO 13:15

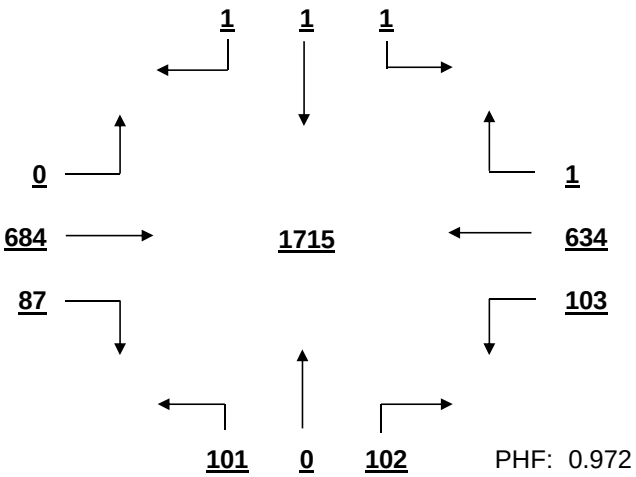

PHF: 0.972

OTHER HOUR VOLUME
FROM 7:00 TO 8:00

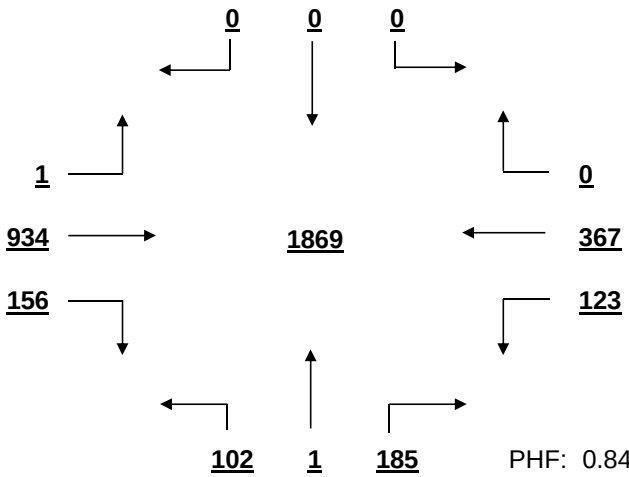

PHF: 0.840

SIGNAL WARRANT ANALYSIS

St. Andrews Rd AT Ashland Rd Date: 11/28/2016

Minor Street Volume, percent of total = 13.0%
Percent of Left Turns from Minor Street = 44.9%
Percent of Right Turns from Minor Street = 54.2%
Percent of Minor Street Right Turns to Remove from Warrant Analysis = 0%
WARRANT BASIS = **100%**

Warrant No. 1 - Vehicular Volume is met

Condition A - Minimum Vehicular Volume is met

Average Major Street % of Warrant				Average Minor Street % of Warrant			
1429.3	/ 600	=	238%	209.6	/ 150	=	140%

Hourly percent of warrant

	7:00-8:00	8:00-9:00	9:00-10:00	10:00-11:00	11:00-12:00	12:00-13:00	13:00-14:00	14:00-15:00	15:00-16:00	16:00-17:00	17:00-18:00	18:00-19:00
Major St.	264%	235%	170%	174%	206%	247%	247%	230%	266%	282%	308%	231%
Minor St.	192%	110%	93%	95%	104%	137%	149%	151%	151%	170%	200%	125%

Condition B - Interruption to Continuous Traffic is met

Average Major Street % of Warrant				Average Minor Street % of Warrant			
1429.3	/ 900	=	159%	209.6	/ 75	=	279%

Hourly percent of warrant

	7:00-8:00	8:00-9:00	9:00-10:00	10:00-11:00	11:00-12:00	12:00-13:00	13:00-14:00	14:00-15:00	15:00-16:00	16:00-17:00	17:00-18:00	18:00-19:00
Major St.	176%	156%	113%	116%	137%	165%	164%	153%	177%	188%	206%	154%
Minor St.	384%	220%	185%	191%	208%	275%	297%	301%	303%	340%	400%	249%

80% Combination of Conditions A & B is met

Warrant No. 2 - Four Hour Vehicular Volume is met

Hourly percent of warrant

	7:00-8:00	8:00-9:00	9:00-10:00	10:00-11:00	11:00-12:00	12:00-13:00	13:00-14:00	14:00-15:00	15:00-16:00	16:00-17:00	17:00-18:00	18:00-19:00
Minor St.	360%	206%	101%	108%	158%	258%	279%	283%	284%	319%	375%	234%

Warrant No. 3 - Peak Hour is met

		Percent of warrant			Percent of warrant
Overall Peak Hour:	16:45-17:45		Higher Volume Side Street Peak Hour:	7:15-8:15	
Minor St.		286%	Minor St.		283%

Warrant No. 4 - Pedestrian Volume. Pedestrian volume shown are minumum volumes assuming heavy major street traffic. If these volumes are met, warrant 4 requires further engineering analysis

S

Minimum 4 hour ped. volume crossing major street: 107

Minimum peak hour ped. volume crossing major street: 133

Number of pedestrians crossing major street

	7:00-8:00	8:00-9:00	9:00-10:00	10:00-11:00	11:00-12:00	12:00-13:00	13:00-14:00	14:00-15:00	15:00-16:00	16:00-17:00	17:00-18:00	18:00-19:00
Major t.	0	6	3	5	2	5	2	0	0	0	2	0

Warrant No. 7 - Crash Experience (Requires 3 criteria analysis by engineering)

Total Number: 0 From: 1/1/2005 to 1/1/2008
Accident Rate: 0.00 per million entering vehicles

Types of Accidents	No.	/	Avg.		No.	/	Avg.
Right Angle	0	/	0.0	Rear End	0	/	0.0
Lost Control	0	/	0.0	Side Swipe	0	/	0.0
Left Turn	0	/	0.0	Other	0	/	0.0

SOUTH CAROLINA DEPARTMENT OF TRANSPORTATION
DISTRICT 1
TRAFFIC ENGINEERING

County: Richland City: Columbia Date: 11/28/2016

Major Rt: St. Andrews Rd * Not on State System Minor Rt: Kilbrannon Dr-St Andrews Apts * Not on State System

Day of Week: Monday Weather: Clear Office: Short Counts JMS

Type of Control: Signal Speed Limit (major st) 40

Direction of Minor Street: N-S Intersection ADT - 20170 (Calc)

Number of Lanes (major st)* 2 Number of Lanes (minor st)* 1 * Each Direction

INTERSECTION VOLUME SUMMARY

	From N Kilbrannon Dr-St A				From S Kilbrannon Dr-St A				From E St. Andrews Rd				From W St. Andrews Rd				Total	Total
	LT	STR	RT	TOT	LT	STR	RT	TOT	LT	STR	RT	TOT	LT	STR	RT	TOT	Vol	Peds
7:00 - 7:15	3	0	1	4	1	0	10	11	8	94	5	107	3	189	5	197	319	2
7:15 - 7:30	6	0	5	11	0	1	15	16	11	108	4	123	3	254	3	260	410	1
7:30 - 7:45	7	0	7	14	1	0	20	21	17	129	3	149	7	325	7	339	523	0
7:45 - 8:00	7	1	2	10	3	1	11	15	7	130	6	143	2	297	12	311	479	1
8:00 - 8:15	1	0	10	11	0	0	11	11	10	124	7	141	2	274	3	279	442	0
8:15 - 8:30	5	0	0	5	0	0	21	21	10	125	3	138	2	266	7	275	439	0
8:30 - 8:45	5	0	3	8	3	0	11	14	8	105	1	114	2	203	2	207	343	0
8:45 - 9:00	1	0	3	4	3	0	13	16	7	128	1	136	1	168	9	178	334	1
9:00 - 9:15	3	0	3	6	2	0	12	14	13	102	1	116	2	178	6	186	322	0
9:15 - 9:30	3	0	3	6	2	0	12	14	12	101	5	118	1	133	2	136	274	3
9:30 - 9:45	5	0	3	8	2	0	8	10	12	119	3	134	2	140	2	144	296	3
9:45 - 10:00	1	0	1	2	2	0	13	15	10	127	1	138	1	125	5	131	286	3
10:00 - 10:15	4	1	1	6	5	0	7	12	12	125	1	138	4	120	5	129	285	1
10:15 - 10:30	6	0	3	9	4	0	5	9	12	114	1	127	1	156	1	158	303	0
10:30 - 10:45	4	0	4	8	9	0	5	14	8	111	4	123	2	130	4	136	281	0
10:45 - 11:00	3	0	2	5	1	0	12	13	9	113	4	126	1	140	7	148	292	2
11:00 - 11:15	2	0	2	4	0	0	15	15	14	148	1	163	0	139	2	141	323	1
11:15 - 11:30	2	0	3	5	2	0	12	14	15	134	3	152	0	118	7	125	296	0
11:30 - 11:45	6	0	2	8	2	0	12	14	14	145	4	163	2	144	5	151	336	6
11:45 - 12:00	4	0	0	4	2	0	12	14	6	169	6	181	5	171	6	182	381	1
12:00 - 12:15	1	2	1	4	3	0	14	17	20	152	10	182	0	165	5	170	373	6
12:15 - 12:30	1	1	4	6	9	0	23	32	14	170	7	191	2	184	3	189	418	0
12:30 - 12:45	2	0	0	2	6	0	17	23	13	182	4	199	1	173	4	178	402	1
12:45 - 13:00	6	0	2	8	5	0	32	37	12	173	3	188	3	190	6	199	432	1
13:00 - 13:15	4	1	4	9	2	0	24	26	20	166	8	194	1	183	6	190	419	2
13:15 - 13:30	4	2	2	8	5	0	16	21	16	163	2	181	1	198	5	204	414	2
13:30 - 13:45	5	0	1	6	2	1	15	18	8	159	4	171	4	192	9	205	400	0
13:45 - 14:00	5	0	3	8	5	0	22	27	13	182	1	196	4	184	2	190	421	0
14:00 - 14:15	5	1	1	7	2	0	17	19	11	154	4	169	0	182	3	185	380	1
14:15 - 14:30	6	0	2	8	1	0	16	17	16	174	4	194	1	162	4	167	386	1
14:30 - 14:45	2	0	5	7	5	2	25	32	10	163	5	178	3	170	5	178	395	1
14:45 - 15:00	4	0	3	7	1	2	13	16	4	176	7	187	2	184	4	190	400	0
15:00 - 15:15	5	0	6	11	2	0	11	13	11	185	5	201	3	219	7	229	454	2
15:15 - 15:30	5	0	4	9	2	1	14	17	12	180	3	195	6	162	2	170	391	1
15:30 - 15:45	6	0	7	13	1	0	16	17	10	191	8	209	3	185	2	190	429	3
15:45 - 16:00	5	1	2	8	5	0	11	16	6	206	2	214	3	183	3	189	427	3
16:00 - 16:15	6	0	5	11	8	1	1	10	7	199	9	215	4	187	1	192	428	4
16:15 - 16:30	5	0	1	6	6	0	2	8	6	216	10	232	2	157	0	159	405	1
16:30 - 16:45	6	0	5	11	9	0	4	13	11	231	8	250	1	144	0	145	419	1
16:45 - 17:00	3	0	3	6	11	0	1	12	11	256	10	277	2	165	5	172	467	0
17:00 - 17:15	5	0	4	9	1	0	20	21	5	243	3	251	3	210	6	219	500	1
17:15 - 17:30	0	0	7	7	3	0	9	12	7	291	4	302	2	198	3	203	524	2
17:30 - 17:45	10	0	6	16	1	0	12	13	5	283	8	296	2	183	2	187	512	1
17:45 - 18:00	3	0	3	6	3	0	7	10	8	237	12	257	7	197	4	208	481	2
18:00 - 18:15	8	1	2	11	4	1	12	17	18	241	4	263	5	180	3	188	479	1
18:15 - 18:30	12	0	3	15	2	0	6	8	3	293	4	300	2	150	5	157	480	0
18:30 - 18:45	5	0	3	8	2	0	14	16	10	284	8	302	5	147	4	156	482	2
18:45 - 19:00	5	0	6	11	4	0	8	12	3	248	12	263	5	120	5	130	416	3
TOTAL	212	11	153	376	154	10	619	783	505	8249	233	8987	120	8624	208	8952	19098	67
Trucks	0	0	0	0	1	0	3	4	4	171	7	182	0	172	0	172	358	1.9%
School Buses	0	0	1	1	0	0	0	0	0	20	2	22	1	19	0	20	43	0.2%

TOTAL AND PEAK HOUR VOLUME DIAGRAMS

St. Andrews Rd AT Kilbrannon Dr-St Andrews Apts Date: 11/28/2016

12.0 HOUR TOTAL VOLUME
FROM 7:00 TO 15:00

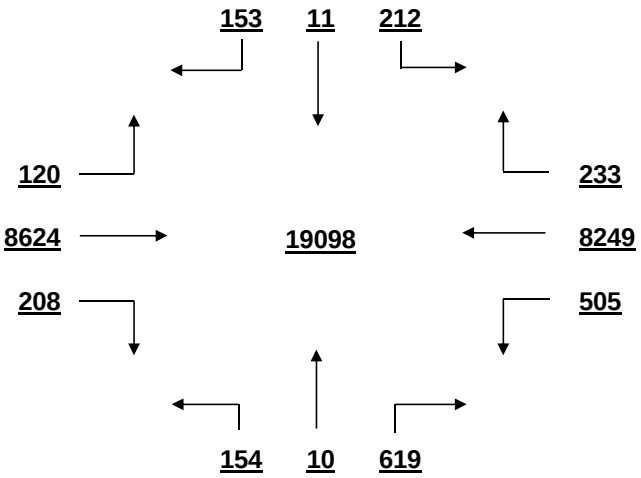

OVERALL PEAK HOUR VOLUME
FROM 17:00 TO 18:00

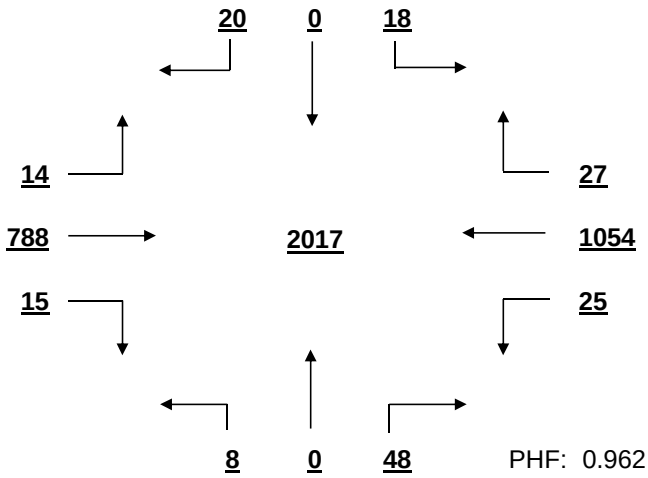

PHF: 0.962

AM PEAK HOUR VOLUME (0:00-10:45)
FROM 7:30 TO 8:30

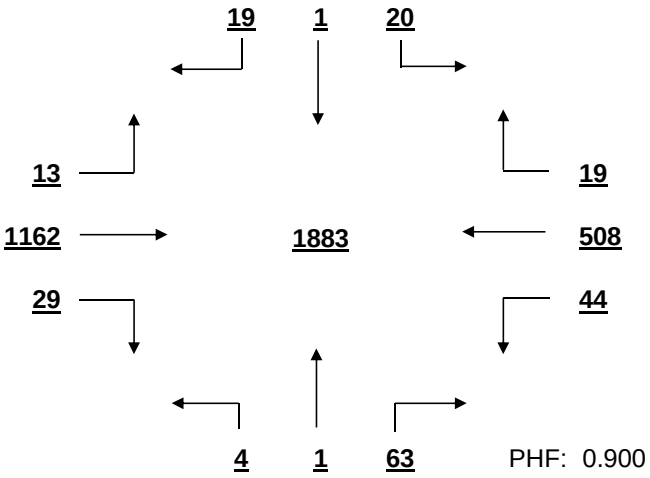

PHF: 0.900

PM PEAK HOUR VOLUME (14:15-23:45)
FROM 17:00 TO 18:00

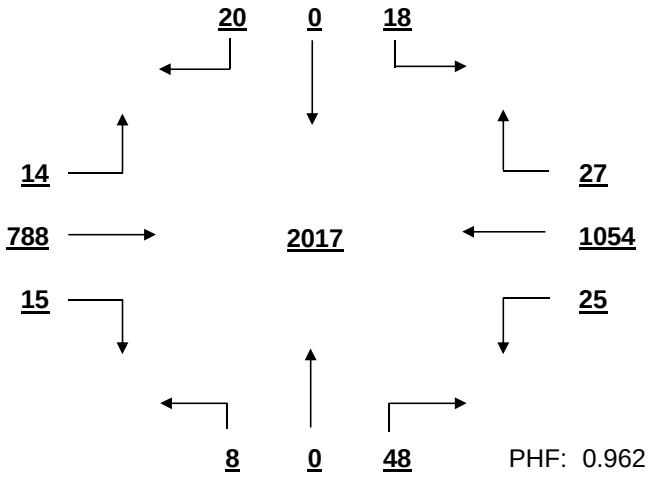

PHF: 0.962

MID-DAY PEAK HOUR VOLUME (11:00-14:00)
FROM 12:15 TO 13:15

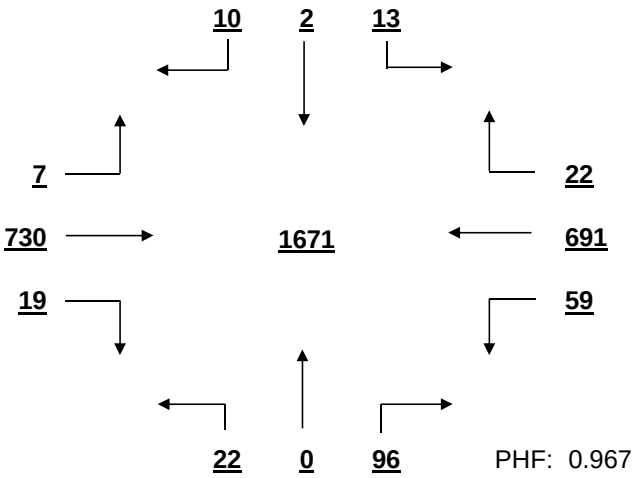

PHF: 0.967

OTHER HOUR VOLUME
FROM 7:00 TO 8:00

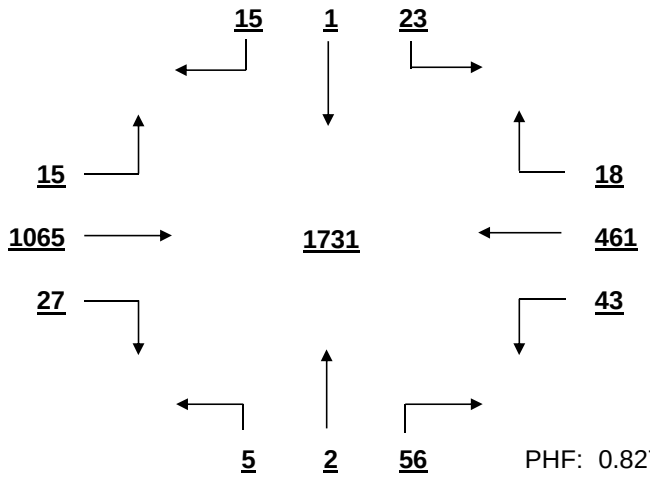

PHF: 0.827

SIGNAL WARRANT ANALYSIS

St. Andrews Rd AT Kilbrannon Dr-St Andrews Apts Date: 11/28/2016

Minor Street Volume, percent of total = 6.1%
Percent of Left Turns from Minor Street = 31.6%
Percent of Right Turns from Minor Street = 66.6%
Percent of Minor Street Right Turns to Remove from Warrant Analysis = 0%
WARRANT BASIS = **100%**

Warrant No. 1 - Vehicular Volume is not met

Condition A - Minimum Vehicular Volume is not met

Average Major Street % of Warrant				Average Minor Street % of Warrant			
1494.9	/ 600 =	249%		65.3	/ 150 =	44%	

Hourly percent of warrant

	7:00 - 8:00	8:00 - 9:00	9:00 - 10:00	10:00 - 11:00	11:00 - 12:00	12:00 - 13:00	13:00 - 14:00	14:00 - 15:00	15:00 - 16:00	16:00 - 17:00	17:00 - 18:00	18:00 - 19:00
Major St.	272%	245%	184%	181%	210%	249%	255%	241%	266%	274%	321%	293%
Minor St.	42%	41%	35%	32%	38%	73%	61%	56%	42%	29%	37%	35%

Condition B - Interruption to Continuous Traffic is not met

Average Major Street % of Warrant				Average Minor Street % of Warrant			
1494.9	/ 900 =	166%		65.3	/ 75 =	87%	

Hourly percent of warrant

	7:00 - 8:00	8:00 - 9:00	9:00 - 10:00	10:00 - 11:00	11:00 - 12:00	12:00 - 13:00	13:00 - 14:00	14:00 - 15:00	15:00 - 16:00	16:00 - 17:00	17:00 - 18:00	18:00 - 19:00
Major St.	181%	163%	123%	121%	140%	166%	170%	161%	177%	182%	214%	195%
Minor St.	84%	83%	71%	64%	76%	145%	123%	112%	84%	57%	75%	71%

80% Combination of Conditions A & B is not met

Warrant No. 2 - Four Hour Vehicular Volume is not met

Hourly percent of warrant

	7:00 - 8:00	8:00 - 9:00	9:00 - 10:00	10:00 - 11:00	11:00 - 12:00	12:00 - 13:00	13:00 - 14:00	14:00 - 15:00	15:00 - 16:00	16:00 - 17:00	17:00 - 18:00	18:00 - 19:00
Minor St.	79%	78%	44%	39%	59%	136%	115%	105%	79%	54%	70%	66%

Warrant No. 3 - Peak Hour is not met

Overall Peak Hour: 17:00 - 18:00 — Percent of warrant — Minor St. 56%

Higher Volume Side Street Peak Hour: 12:15 - 13:15 — Percent of warrant — Minor St. 89%

Warrant No. 4 - Pedestrian Volume. Pedestrian volume shown are minumum volumes assuming heavy major street traffic. If these volumes are met, warrant 4 requires further engineering analysis

S

Minimum 4 hour ped. volume crossing major street: 107

Minimum peak hour ped. volume crossing major street: 133

Number of pedestrians crossing major street

	7:00 - 8:00	8:00 - 9:00	9:00 - 10:00	10:00 - 11:00	11:00 - 12:00	12:00 - 13:00	13:00 - 14:00	14:00 - 15:00	15:00 - 16:00	16:00 - 17:00	17:00 - 18:00	18:00 - 19:00
Major t.	0	0	1	0	4	1	2	1	0	0	0	0

Warrant No. 7 - Crash Experience (Requires 3 criteria analysis by engineering)

Total Number: 0 From: 1/1/2005 to 1/1/2008

Accident Rate: 0.00 per million entering vehicles

Types of Accidents	No.	/	Avg.		No.	/	Avg.
Right Angle	0	/	0.0	Rear End	0	/	0.0
Lost Control	0	/	0.0	Side Swipe	0	/	0.0
Left Turn	0	/	0.0	Other	0	/	0.0

SOUTH CAROLINA DEPARTMENT OF TRANSPORTATION
DISTRICT 1
TRAFFIC ENGINEERING

County: Richland City: Columbia Date: 11/28/2016

Major Rt: St. Andrews Rd * Not on State System Minor Rt: Jamil Rd * Not on State System

Day of Week: Monday Weather: Clear Office: Short Counts JMS

Type of Control: Signal Speed Limit (major st) 40

Direction of Minor Street: N-S Intersection ADT - 23890 (Calc)

Number of Lanes (major st)* 2 Number of Lanes (minor st)* 1

* Each Direction

INTERSECTION VOLUME SUMMARY

	From N Jamil Rd				From S Jamil Rd				From E St. Andrews Rd				From W St. Andrews Rd				Total	Total
	LT	STR	RT	TOT	LT	STR	RT	TOT	LT	STR	RT	TOT	LT	STR	RT	TOT	Vol	Peds
7:00 - 7:15	17	0	9	26	0	0	0	0	0	91	12	103	2	193	0	195	324	3
7:15 - 7:30	30	0	14	44	0	0	0	0	1	114	15	130	7	263	1	271	445	1
7:30 - 7:45	54	0	17	71	0	0	0	0	0	123	27	150	5	337	0	342	563	0
7:45 - 8:00	62	0	8	70	0	0	0	0	0	144	18	162	4	313	0	317	549	1
8:00 - 8:15	60	0	13	73	0	0	0	0	0	131	18	149	4	296	0	300	522	0
8:15 - 8:30	47	0	0	47	0	0	0	0	0	127	25	152	5	285	0	290	489	0
8:30 - 8:45	25	0	7	32	0	0	0	0	0	108	24	132	3	217	0	220	384	1
8:45 - 9:00	33	0	5	38	0	0	0	0	0	147	31	178	5	184	0	189	405	1
9:00 - 9:15	26	0	5	31	0	0	0	0	0	117	37	154	7	187	0	194	379	0
9:15 - 9:30	38	0	4	42	0	0	0	0	0	112	31	143	2	147	0	149	334	1
9:30 - 9:45	33	0	6	39	0	0	0	0	0	135	25	160	10	153	0	163	362	2
9:45 - 10:00	34	0	9	43	0	0	0	0	0	137	45	182	3	133	0	136	361	1
10:00 - 10:15	26	0	9	35	0	0	0	0	0	122	23	145	5	124	0	129	309	0
10:15 - 10:30	29	0	9	38	0	0	0	0	0	118	32	150	9	165	0	174	362	1
10:30 - 10:45	38	0	9	47	0	0	0	0	0	130	31	161	5	140	0	145	353	2
10:45 - 11:00	28	0	11	39	0	0	0	0	0	115	24	139	9	152	0	161	339	1
11:00 - 11:15	32	0	12	44	0	0	0	0	0	155	25	180	15	158	0	173	397	1
11:15 - 11:30	28	0	9	37	0	0	0	0	0	163	31	194	12	146	0	158	389	1
11:30 - 11:45	29	0	14	43	0	0	0	0	0	167	55	222	15	175	0	190	455	0
11:45 - 12:00	43	0	18	61	0	0	0	0	0	165	43	208	9	184	0	193	462	2
12:00 - 12:15	41	0	7	48	0	0	0	0	0	193	44	237	9	163	0	172	457	4
12:15 - 12:30	44	0	9	53	0	0	0	0	0	211	33	244	10	206	0	216	513	0
12:30 - 12:45	40	0	24	64	0	0	0	0	0	203	36	239	10	205	0	215	518	0
12:45 - 13:00	46	0	20	66	0	0	0	0	0	182	45	227	12	239	0	251	544	1
13:00 - 13:15	54	0	9	63	0	0	0	0	0	191	42	233	13	225	0	238	534	0
13:15 - 13:30	57	0	19	76	0	0	1	1	0	177	60	237	8	213	1	222	536	1
13:30 - 13:45	43	0	19	62	1	0	0	1	0	166	42	208	11	220	1	232	503	1
13:45 - 14:00	58	0	21	79	0	0	1	1	0	186	44	230	12	230	1	243	553	3
14:00 - 14:15	51	0	13	64	0	0	0	0	0	166	39	205	15	206	0	221	490	2
14:15 - 14:30	49	0	18	67	0	0	0	0	0	195	59	254	12	168	0	180	501	0
14:30 - 14:45	38	0	17	55	0	0	0	0	0	170	49	219	17	190	0	207	481	3
14:45 - 15:00	43	0	14	57	0	0	0	0	0	176	41	217	18	199	0	217	491	3
15:00 - 15:15	60	0	18	78	0	0	0	0	0	193	35	228	11	238	0	249	555	3
15:15 - 15:30	60	0	13	73	0	0	0	0	0	201	33	234	10	183	1	194	501	1
15:30 - 15:45	47	0	8	55	0	0	0	0	0	202	51	253	14	216	0	230	538	5
15:45 - 16:00	31	0	11	42	0	0	1	1	0	201	53	254	8	212	1	221	518	3
16:00 - 16:15	61	0	22	83	0	0	0	0	1	211	62	274	9	208	0	217	574	2
16:15 - 16:30	62	0	12	74	0	0	0	0	0	234	62	296	14	221	0	235	605	5
16:30 - 16:45	52	0	24	76	0	0	0	0	0	229	72	301	16	188	0	204	581	3
16:45 - 17:00	43	0	19	62	0	0	0	0	0	274	54	328	9	194	0	203	593	1
17:00 - 17:15	55	1	14	70	0	0	0	0	0	244	51	295	13	206	0	219	584	3
17:15 - 17:30	40	0	10	50	0	0	0	0	0	294	74	368	9	204	0	213	631	2
17:30 - 17:45	41	0	15	56	0	0	0	0	0	242	54	296	10	187	0	197	549	4
17:45 - 18:00	33	0	13	46	0	0	0	0	0	260	67	327	20	206	0	226	599	0
18:00 - 18:15	54	0	10	64	0	0	0	0	0	210	65	275	16	195	0	211	550	0
18:15 - 18:30	36	0	9	45	0	0	0	0	0	249	63	312	12	176	0	188	545	1
18:30 - 18:45	36	0	10	46	0	0	0	0	0	209	43	252	10	167	0	177	475	2
18:45 - 19:00	23	0	6	29	0	0	0	0	0	166	30	196	7	146	0	153	378	2
TOTAL	2010	1	592	2603	1	0	3	4	2	8456	1975	10433	471	9563	6	10040	23080	74
Trucks	26	1	6	33	0	0	0	0	0	123	22	145	5	156	2	163	341	1.5%
School Buses	8	0	3	11	0	0	0	0	0	13	15	28	1	30	0	31	70	0.3%

TOTAL AND PEAK HOUR VOLUME DIAGRAMS

St. Andrews Rd AT Jamil Rd Date: 11/28/2016

12.0 HOUR TOTAL VOLUME
FROM 7:00 TO 15:00

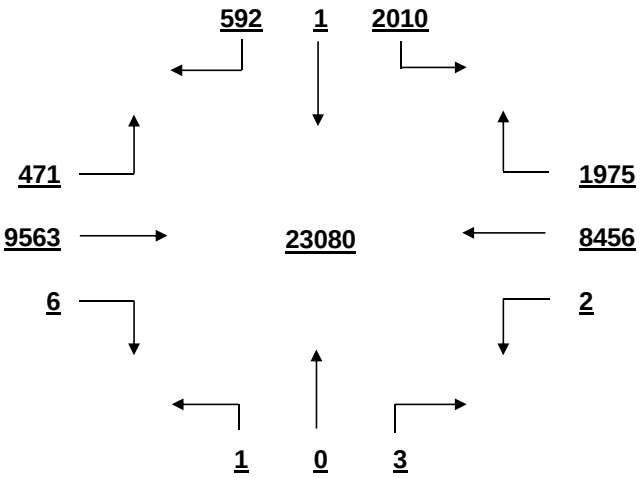

OVERALL PEAK HOUR VOLUME
FROM 16:30 TO 17:30

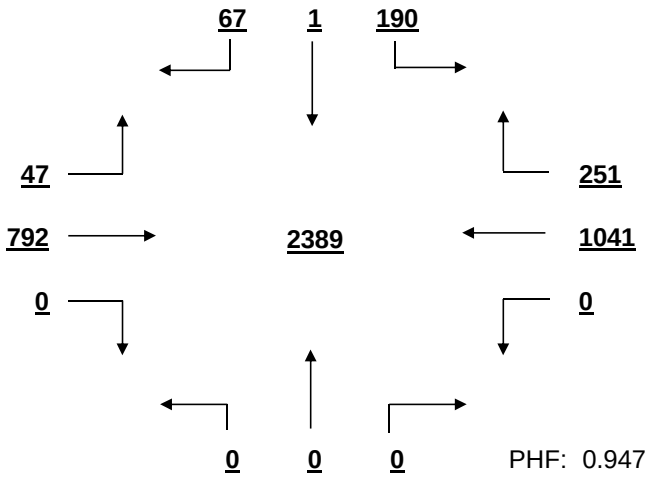

PHF: 0.947

AM PEAK HOUR VOLUME (0:00-10:45)
FROM 7:30 TO 8:30

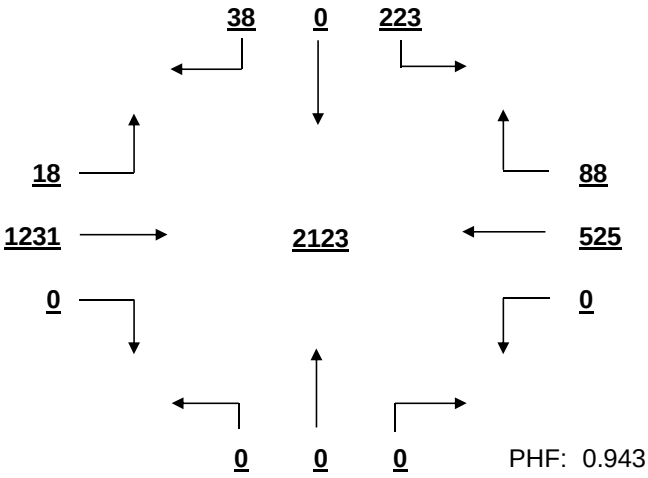

PHF: 0.943

PM PEAK HOUR VOLUME (14:15-23:45)
FROM 16:30 TO 17:30

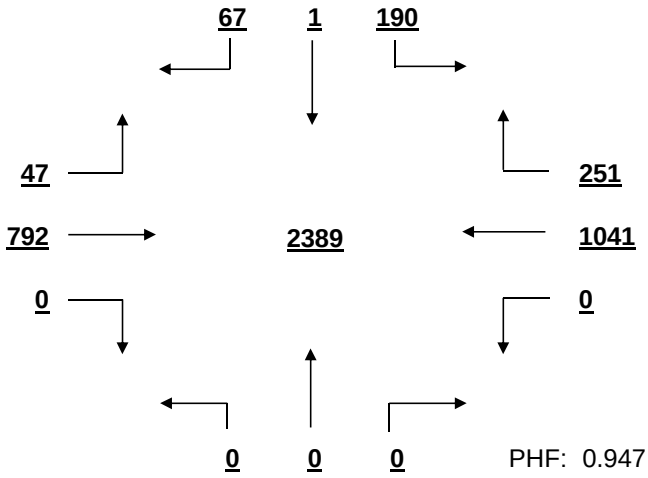

PHF: 0.947

MID-DAY PEAK HOUR VOLUME (11:00-14:00)
FROM 12:30 TO 13:30

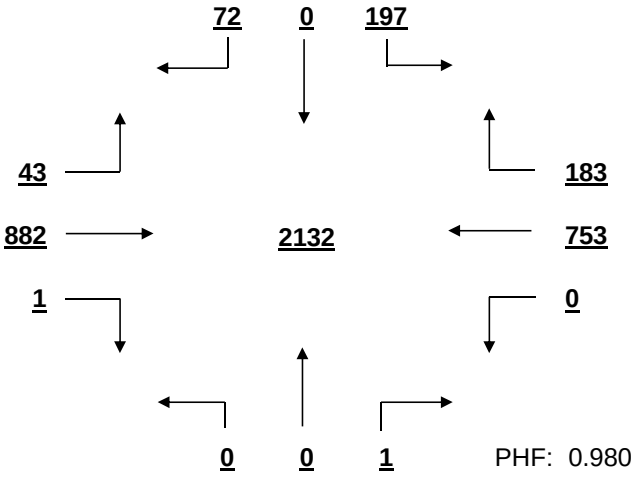

PHF: 0.980

OTHER HOUR VOLUME
FROM 7:00 TO 8:00

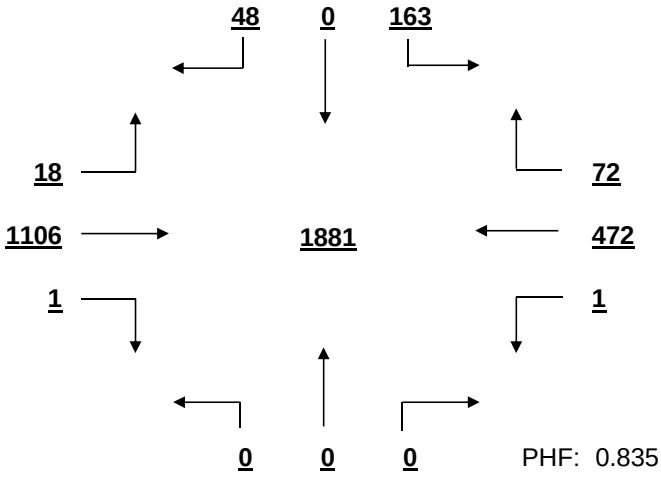

PHF: 0.835

SIGNAL WARRANT ANALYSIS

St. Andrews Rd AT Jamil Rd Date: 11/28/2016

Minor Street Volume, percent of total = 11.3%
Percent of Left Turns from Minor Street = 77.1%
Percent of Right Turns from Minor Street = 22.8%
Percent of Minor Street Right Turns to Remove from Warrant Analysis = 0%
WARRANT BASIS = **100%**

Warrant No. 1 - Vehicular Volume is met

Condition A - Minimum Vehicular Volume is met

Average Major Street % of Warrant				Average Minor Street % of Warrant			
1706.1	/ 600	=	284%	216.9	/ 150	=	145%

Hourly percent of warrant

	7:00 - 8:00	8:00 - 9:00	9:00 - 10:00	10:00 - 11:00	11:00 - 12:00	12:00 - 13:00	13:00 - 14:00	14:00 - 15:00	15:00 - 16:00	16:00 - 17:00	17:00 - 18:00	18:00 - 19:00
Major St.	278%	268%	214%	201%	253%	300%	307%	287%	311%	343%	357%	294%
Minor St.	141%	127%	103%	106%	123%	154%	187%	162%	165%	197%	148%	123%

Condition B - Interruption to Continuous Traffic is met

Average Major Street % of Warrant				Average Minor Street % of Warrant			
1706.1	/ 900	=	190%	216.9	/ 75	=	289%

Hourly percent of warrant

	7:00 - 8:00	8:00 - 9:00	9:00 - 10:00	10:00 - 11:00	11:00 - 12:00	12:00 - 13:00	13:00 - 14:00	14:00 - 15:00	15:00 - 16:00	16:00 - 17:00	17:00 - 18:00	18:00 - 19:00
Major St.	186%	179%	142%	134%	169%	200%	205%	191%	207%	229%	238%	196%
Minor St.	281%	253%	207%	212%	247%	308%	373%	324%	331%	393%	296%	245%

80% Combination of Conditions A & B is met

Warrant No. 2 - Four Hour Vehicular Volume is met

Hourly percent of warrant

	7:00 - 8:00	8:00 - 9:00	9:00 - 10:00	10:00 - 11:00	11:00 - 12:00	12:00 - 13:00	13:00 - 14:00	14:00 - 15:00	15:00 - 16:00	16:00 - 17:00	17:00 - 18:00	18:00 - 19:00
Minor St.	264%	238%	166%	154%	231%	289%	350%	304%	310%	369%	278%	230%

Warrant No. 3 - Peak Hour is met

Overall Peak Hour: 16:30 - 17:30 — Percent of warrant — Minor St. 258%

Higher Volume Side Street Peak Hour: 16:00 - 17:00 — Percent of warrant — Minor St. 295%

Warrant No. 4 - Pedestrian Volume. Pedestrian volume shown are minumum volumes assuming heavy major street traffic. If these volumes are met, warrant 4 requires further engineering analysis

S

Minimum 4 hour ped. volume crossing major street: 107

Minimum peak hour ped. volume crossing major street: 133

Number of pedestrians crossing major street

	7:00 - 8:00	8:00 - 9:00	9:00 - 10:00	10:00 - 11:00	11:00 - 12:00	12:00 - 13:00	13:00 - 14:00	14:00 - 15:00	15:00 - 16:00	16:00 - 17:00	17:00 - 18:00	18:00 - 19:00
Major t.	0	0	0	2	0	0	0	0	0	0	0	0

Warrant No. 7 - Crash Experience (Requires 3 criteria analysis by engineering)

Total Number: 0 From: 1/1/2005 to 1/1/2008

Accident Rate: 0.00 per million entering vehicles

Types of Accidents	No.	/	Avg.		No.	/	Avg.
Right Angle	0	/	0.0	Rear End	0	/	0.0
Lost Control	0	/	0.0	Side Swipe	0	/	0.0
Left Turn	0	/	0.0	Other	0	/	0.0

SOUTH CAROLINA DEPARTMENT OF TRANSPORTATION
DISTRICT 1
TRAFFIC ENGINEERING

County: Richland City: Columbia Date: 11/28/2016

Major Rt: Woodland Hills Rd * Not on State System Minor Rt: Berry Hill Rd-Restaurant * Not on State System

Day of Week: Monday Weather: Clear Office: Short Counts JMS

Type of Control: Stop Sign Speed Limit (major st) 35

Direction of Minor Street: E-W Intersection ADT - 4820 (Calc)

Number of Lanes (major st)* 1 Number of Lanes (minor st)* 1

* Each Direction

INTERSECTION VOLUME SUMMARY

	From N Woodland Hills Rd				From S Woodland Hills Rd				From E Berry Hill Rd-Rest				From W Berry Hill Rd-Rest				Total	Total
	LT	STR	RT	TOT	LT	STR	RT	TOT	LT	STR	RT	TOT	LT	STR	RT	TOT	Vol	Peds
7:00 - 7:15	6	10	0	16	0	7	0	7	1	0	15	16	0	0	0	0	39	0
7:15 - 7:30	28	16	0	44	0	17	2	19	4	0	14	18	1	0	1	2	83	0
7:30 - 7:45	22	13	0	35	1	9	3	13	2	0	7	9	0	0	0	0	57	0
7:45 - 8:00	33	4	0	37	1	3	4	8	0	2	4	6	0	2	3	5	56	0
8:00 - 8:15	9	1	0	10	0	1	0	1	0	1	2	3	0	1	2	3	17	0
8:15 - 8:30	38	4	0	42	2	19	0	21	6	0	12	18	0	2	1	3	84	0
8:30 - 8:45	24	6	0	30	0	4	3	7	4	3	9	16	0	8	1	9	62	0
8:45 - 9:00	27	3	1	31	0	5	1	6	0	1	16	17	0	14	1	15	69	0
9:00 - 9:15	23	6	0	29	0	7	0	7	0	0	8	8	0	0	0	0	44	0
9:15 - 9:30	18	4	0	22	0	8	0	8	1	1	13	15	0	0	0	0	45	0
9:30 - 9:45	13	7	0	20	0	14	1	15	2	0	14	16	0	1	1	2	53	0
9:45 - 10:00	22	11	2	35	0	14	0	14	1	0	17	18	0	0	0	0	67	0
10:00 - 10:15	11	6	1	18	0	8	1	9	0	4	22	26	2	0	0	2	55	0
10:15 - 10:30	20	4	6	30	0	7	0	7	0	1	20	21	1	1	0	2	60	0
10:30 - 10:45	13	7	0	20	1	10	0	11	0	1	18	19	1	0	0	1	51	0
10:45 - 11:00	15	10	0	25	0	18	0	18	1	0	22	23	2	0	0	2	68	0
11:00 - 11:15	11	17	2	30	1	13	0	14	1	0	22	23	0	0	0	0	67	2
11:15 - 11:30	20	11	1	32	1	9	1	11	1	0	20	21	1	0	0	1	65	0
11:30 - 11:45	9	12	1	22	1	9	2	12	0	0	11	11	1	2	0	3	48	0
11:45 - 12:00	6	11	2	19	1	10	2	13	1	1	23	25	2	3	2	7	64	0
12:00 - 12:15	22	12	0	34	0	8	0	8	2	0	33	35	2	0	2	4	81	0
12:15 - 12:30	7	5	3	15	0	10	3	13	3	1	15	19	3	1	2	6	53	0
12:30 - 12:45	31	7	3	41	3	11	0	14	3	3	18	24	1	1	1	3	82	0
12:45 - 13:00	10	5	2	17	2	8	3	13	1	2	17	20	1	0	3	4	54	2
13:00 - 13:15	6	4	0	10	9	15	10	34	1	1	12	14	0	6	3	9	67	0
13:15 - 13:30	39	13	1	53	1	16	2	19	2	0	34	36	0	1	0	1	109	0
13:30 - 13:45	13	10	1	24	0	4	2	6	1	0	15	16	0	0	0	0	46	5
13:45 - 14:00	26	4	3	33	0	8	3	11	1	0	31	32	1	2	0	3	79	0
14:00 - 14:15	33	11	1	45	0	12	4	16	2	0	24	26	1	1	0	2	89	0
14:15 - 14:30	22	11	1	34	1	3	1	5	3	0	10	13	3	1	0	4	56	0
14:30 - 14:45	7	3	0	10	0	11	9	20	1	0	9	10	0	1	1	2	42	0
14:45 - 15:00	21	14	1	36	0	16	4	20	3	0	18	21	0	0	0	0	77	0
15:00 - 15:15	34	8	2	44	0	14	2	16	0	0	32	32	2	0	1	3	95	0
15:15 - 15:30	31	7	1	39	1	10	1	12	1	0	32	33	2	1	2	5	89	0
15:30 - 15:45	20	16	0	36	0	16	1	17	3	0	25	28	2	0	2	4	85	0
15:45 - 16:00	18	15	3	36	2	7	0	9	1	0	25	26	1	1	0	2	73	0
16:00 - 16:15	25	17	0	42	0	16	1	17	2	0	28	30	2	1	0	3	92	0
16:15 - 16:30	28	13	0	41	1	8	1	10	2	0	38	40	2	0	0	2	93	0
16:30 - 16:45	24	23	1	48	0	12	3	15	2	1	40	43	1	0	0	1	107	0
16:45 - 17:00	29	19	3	51	0	14	1	15	2	0	34	36	1	1	0	2	104	0
17:00 - 17:15	26	18	1	45	0	16	1	17	0	1	72	73	0	1	0	1	136	0
17:15 - 17:30	20	25	1	46	0	20	7	27	3	1	57	61	0	0	1	1	135	0
17:30 - 17:45	21	14	3	38	0	14	4	18	5	1	41	47	1	0	0	1	104	0
17:45 - 18:00	15	10	5	30	0	9	0	9	0	1	19	20	0	1	0	1	60	0
18:00 - 18:15	21	11	3	35	0	13	0	13	0	1	24	25	2	0	2	4	77	0
18:15 - 18:30	27	22	1	50	0	10	1	11	2	1	15	18	2	0	1	3	82	0
18:30 - 18:45	16	14	0	30	0	8	1	9	1	0	13	14	4	1	0	5	58	0
18:45 - 19:00	12	12	1	25	0	6	2	8	1	1	10	12	2	1	0	3	48	0
TOTAL	972	506	57	1535	29	507	87	623	73	30	1030	1133	47	56	33	136	3427	9
Trucks	4	7	0	11	0	3	1	4	0	0	2	2	0	1	1	2	19	0.6%
School Buses	7	0	0	7	0	3	0	3	0	0	5	5	0	0	0	0	15	0.4%

TOTAL AND PEAK HOUR VOLUME DIAGRAMS

Woodland Hills Rd AT Berry Hill Rd-Restaurant Date: 11/28/2016

12.0 HOUR TOTAL VOLUME
FROM 7:00 TO 15:00

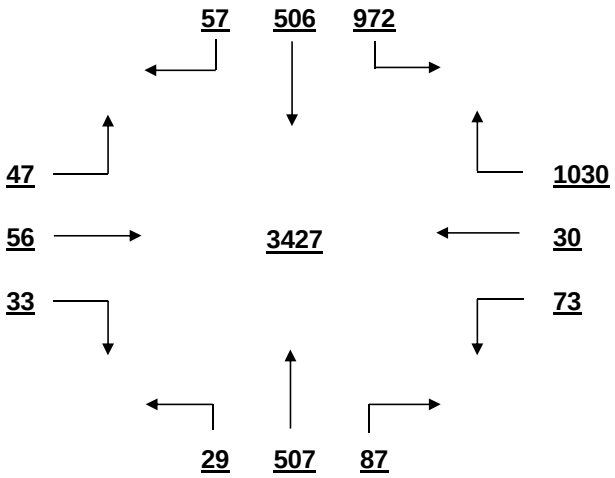

OVERALL PEAK HOUR VOLUME
FROM 16:30 TO 17:30

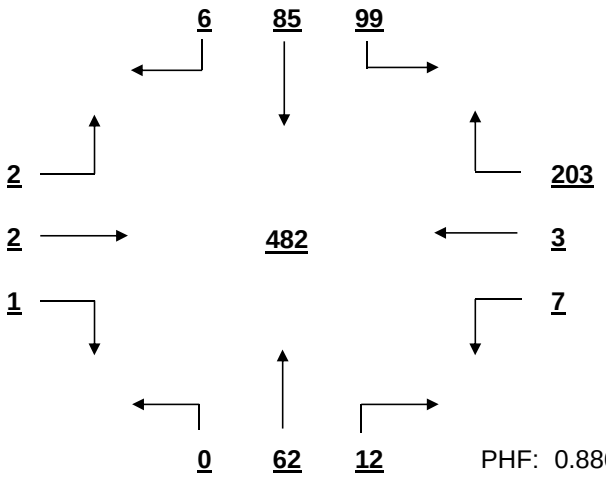

PHF: 0.886

AM PEAK HOUR VOLUME (0:00-10:45)
FROM 8:15 TO 9:15

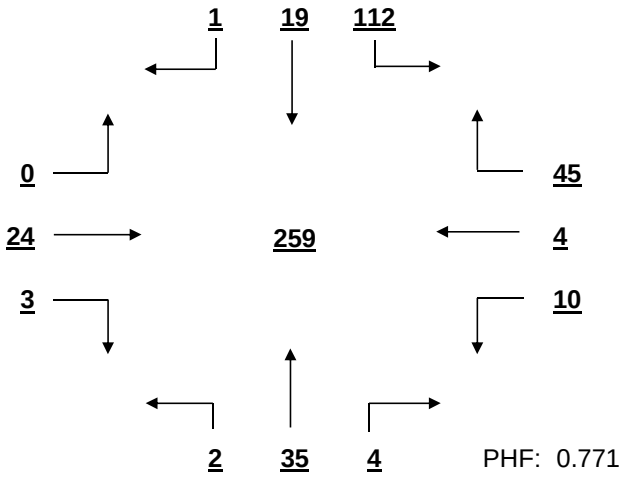

PHF: 0.771

PM PEAK HOUR VOLUME (14:15-23:45)
FROM 16:30 TO 17:30

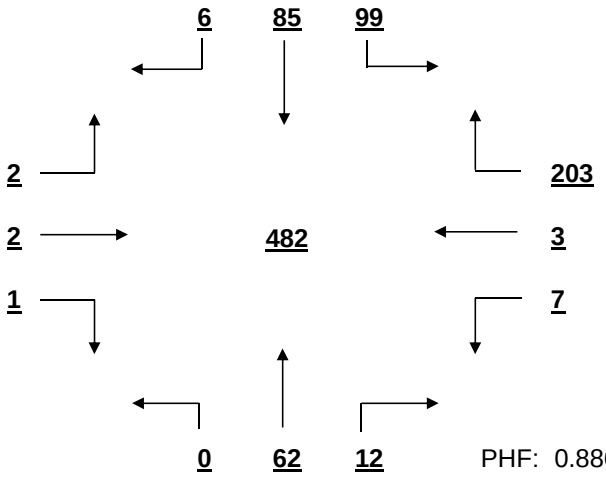

PHF: 0.886

MID-DAY PEAK HOUR VOLUME (11:00-14:00)
FROM 12:30 TO 13:30

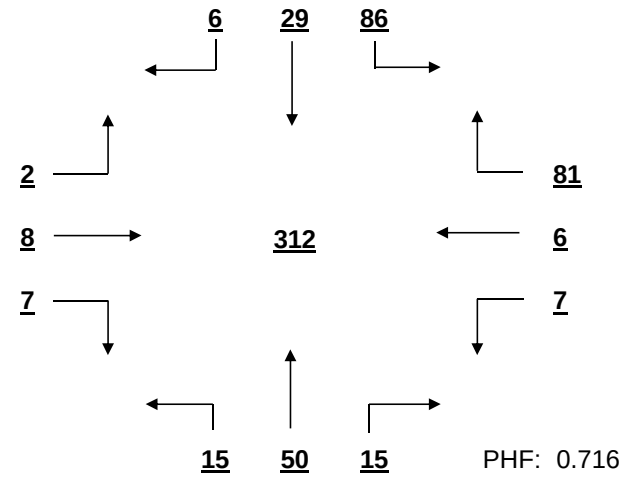

PHF: 0.716

OTHER HOUR VOLUME
FROM 7:00 TO 8:00

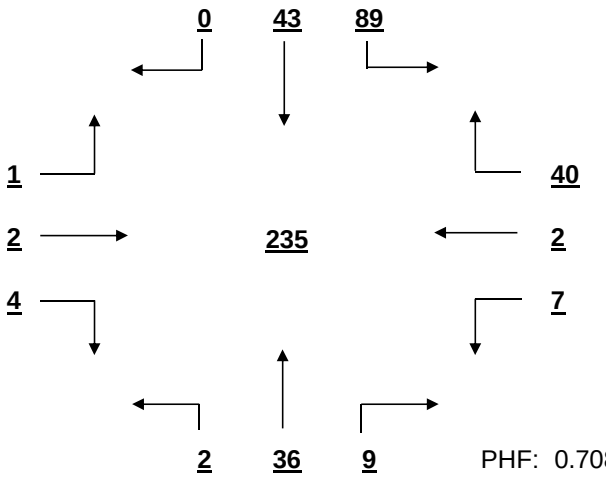

PHF: 0.708

SIGNAL WARRANT ANALYSIS

Woodland Hills Rd AT Berry Hill Rd-Restaurant Date: 11/28/2016

Minor Street Volume, percent of total = 37.0%
Percent of Left Turns from Minor Street = 9.5%
Percent of Right Turns from Minor Street = 83.8%
Percent of Minor Street Right Turns to Remove from Warrant Analysis = 0%
WARRANT BASIS = **100%**

Warrant No. 1 - Vehicular Volume is not met

Condition A - Minimum Vehicular Volume is not met

Average Major Street % of Warrant				Average Minor Street % of Warrant			
179.8	/ 500	=	36%	94.4	/ 150	=	63%

Hourly percent of warrant

	7:00-8:00	8:00-9:00	9:00-10:00	10:00-11:00	11:00-12:00	12:00-13:00	13:00-14:00	14:00-15:00	15:00-16:00	16:00-17:00	17:00-18:00	18:00-19:00
Major St.	36%	30%	30%	28%	31%	31%	38%	37%	42%	48%	46%	36%
Minor St.	33%	36%	38%	59%	53%	65%	65%	47%	79%	99%	134%	46%

Condition B - Interruption to Continuous Traffic is not met

Average Major Street % of Warrant				Average Minor Street % of Warrant			
179.8	/ 750	=	24%	94.4	/ 75	=	126%

Hourly percent of warrant

	7:00-8:00	8:00-9:00	9:00-10:00	10:00-11:00	11:00-12:00	12:00-13:00	13:00-14:00	14:00-15:00	15:00-16:00	16:00-17:00	17:00-18:00	18:00-19:00
Major St.	24%	20%	20%	18%	20%	21%	25%	25%	28%	32%	31%	24%
Minor St.	65%	72%	76%	119%	107%	131%	131%	93%	159%	199%	268%	92%

80% Combination of Conditions A & B is not met

Warrant No. 2 - Four Hour Vehicular Volume is not met

Hourly percent of warrant

	7:00-8:00	8:00-9:00	9:00-10:00	10:00-11:00	11:00-12:00	12:00-13:00	13:00-14:00	14:00-15:00	15:00-16:00	16:00-17:00	17:00-18:00	18:00-19:00
Minor St.	11%	12%	13%	20%	18%	22%	23%	17%	29%	38%	51%	16%

Warrant No. 3 - Peak Hour is not met

Percent of warrant
Overall Peak Hour: 16:30-17:30
Minor St. 37%

Percent of warrant
Higher Volume Side Street Peak Hour: 16:45-17:45
Minor St. 38%

Warrant No. 4 - Pedestrian Volume. Pedestrian volume shown are minumum volumes assuming heavy major street traffic. If these volumes are met, warrant 4 requires further engineering analysis

S

Minimum 4 hour ped. volume crossing major street: 107

Minimum peak hour ped. volume crossing major street: 133

Number of pedestrians crossing major street

	7:00-8:00	8:00-9:00	9:00-10:00	10:00-11:00	11:00-12:00	12:00-13:00	13:00-14:00	14:00-15:00	15:00-16:00	16:00-17:00	17:00-18:00	18:00-19:00
Major t.	0	0	0	0	2	0	0	0	0	0	0	0

Warrant No. 7 - Crash Experience (Requires 3 criteria analysis by engineering)

Total Number: 0 From: 1/1/2005 to 1/1/2008
Accident Rate: 0.00 per million entering vehicles

Types of Accidents	No.	/	Avg.		No.	/	Avg.
Right Angle	0	/	0.0	Rear End	0	/	0.0
Lost Control	0	/	0.0	Side Swipe	0	/	0.0
Left Turn	0	/	0.0	Other	0	/	0.0

SOUTH CAROLINA DEPARTMENT OF TRANSPORTATION
DISTRICT 1
TRAFFIC ENGINEERING

County: Richland City: Columbia Date: 11/28/2016

Major Rt: St. Andrews Rd * Not on State System Minor Rt: Kay St-Chartwell Rd * Not on State System

Day of Week: Monday Weather: Clear Office: Short Counts JMS

Type of Control: Signal Speed Limit (major st) 40

Direction of Minor Street: N-S Intersection ADT - 18950 (Calc)

Number of Lanes (major st)* 2 Number of Lanes (minor st)* 1 * Each Direction

INTERSECTION VOLUME SUMMARY

	From N Kay St-Chartwell R				From S Kay St-Chartwell R				From E St. Andrews Rd				From W St. Andrews Rd				Total	Total
	LT	STR	RT	TOT	LT	STR	RT	TOT	LT	STR	RT	TOT	LT	STR	RT	TOT	Vol	Peds
7:00 - 7:15	5	0	37	42	3	0	2	5	2	96	1	99	22	86	1	109	255	0
7:15 - 7:30	8	0	45	53	6	1	1	8	2	110	2	114	20	107	1	128	303	1
7:30 - 7:45	10	0	60	70	3	0	1	4	0	162	5	167	28	97	2	127	368	0
7:45 - 8:00	10	1	64	75	3	1	2	6	1	181	4	186	18	118	1	137	404	1
8:00 - 8:15	5	0	60	65	2	0	1	3	2	136	6	144	21	121	3	145	357	0
8:15 - 8:30	6	0	0	6	4	0	2	6	0	130	6	136	22	122	1	145	293	0
8:30 - 8:45	4	0	29	33	1	0	1	2	0	119	1	120	23	116	2	141	296	0
8:45 - 9:00	5	0	16	21	3	0	0	3	0	112	3	115	23	118	2	143	282	0
9:00 - 9:15	7	0	20	27	3	0	1	4	0	110	3	113	14	100	1	115	259	0
9:15 - 9:30	8	0	19	27	1	0	0	1	1	96	7	104	14	89	0	103	235	1
9:30 - 9:45	9	0	28	37	0	0	1	1	1	95	2	98	10	94	0	104	240	1
9:45 - 10:00	3	0	25	28	1	0	2	3	2	117	4	123	11	94	1	106	260	0
10:00 - 10:15	1	0	20	21	1	0	0	1	0	88	11	99	15	98	0	113	234	0
10:15 - 10:30	6	0	19	25	2	0	0	2	0	109	4	113	17	104	1	122	262	0
10:30 - 10:45	10	0	20	30	3	0	0	3	1	97	7	105	25	101	4	130	268	0
10:45 - 11:00	5	0	20	25	0	0	0	0	0	99	10	109	17	106	1	124	258	0
11:00 - 11:15	7	0	25	32	0	1	0	1	0	109	10	119	17	103	3	123	275	2
11:15 - 11:30	9	1	16	26	2	0	1	3	1	108	15	124	21	113	3	137	290	1
11:30 - 11:45	13	1	14	28	3	1	0	4	1	116	6	123	21	107	1	129	284	0
11:45 - 12:00	11	0	25	36	3	0	1	4	0	116	14	130	19	126	4	149	319	2
12:00 - 12:15	16	1	34	51	1	0	0	1	1	115	16	132	26	128	3	157	341	0
12:15 - 12:30	13	1	29	43	4	0	1	5	1	148	12	161	25	156	3	184	393	0
12:30 - 12:45	13	0	26	39	3	0	0	3	1	138	9	148	19	129	2	150	340	2
12:45 - 13:00	11	0	25	36	2	1	1	4	1	136	15	152	34	151	1	186	378	0
13:00 - 13:15	12	0	22	34	7	0	1	8	4	138	15	157	32	176	2	210	409	0
13:15 - 13:30	8	0	23	31	6	0	0	6	2	134	15	151	23	133	1	157	345	0
13:30 - 13:45	14	1	25	40	8	2	2	12	2	142	10	154	25	140	2	167	373	1
13:45 - 14:00	11	0	16	27	3	0	1	4	1	126	7	134	28	146	3	177	342	0
14:00 - 14:15	17	0	29	46	7	1	2	10	0	136	13	149	33	129	1	163	368	2
14:15 - 14:30	13	3	27	43	0	1	0	1	2	167	9	178	24	146	1	171	393	1
14:30 - 14:45	8	0	32	40	2	0	0	2	2	170	9	181	23	140	3	166	389	1
14:45 - 15:00	9	1	29	39	3	1	3	7	3	129	10	142	29	123	3	155	343	2
15:00 - 15:15	15	0	34	49	5	0	1	6	2	145	7	154	26	125	7	158	367	0
15:15 - 15:30	12	0	34	46	3	1	1	5	1	129	7	137	29	130	4	163	351	3
15:30 - 15:45	10	0	33	43	3	0	2	5	0	154	10	164	30	138	9	177	389	3
15:45 - 16:00	9	0	35	44	2	1	1	4	1	168	11	180	23	164	4	191	419	0
16:00 - 16:15	6	3	35	44	3	0	2	5	1	187	15	203	32	155	2	189	441	1
16:15 - 16:30	9	1	46	56	1	0	1	2	2	161	10	173	38	163	3	204	435	0
16:30 - 16:45	11	0	53	64	1	0	3	4	3	206	19	228	39	136	5	180	476	2
16:45 - 17:00	10	1	48	59	2	1	2	5	0	167	11	178	53	144	4	201	443	0
17:00 - 17:15	12	1	63	76	4	1	1	6	2	183	17	202	32	151	8	191	475	0
17:15 - 17:30	12	0	58	70	4	0	2	6	4	159	15	178	59	182	6	247	501	1
17:30 - 17:45	10	0	33	43	6	0	1	7	3	181	22	206	49	146	4	199	455	0
17:45 - 18:00	13	1	31	45	5	0	0	5	3	149	13	165	43	173	7	223	438	0
18:00 - 18:15	10	1	20	31	2	0	1	3	3	169	13	185	40	166	7	213	432	2
18:15 - 18:30	14	0	37	51	1	0	2	3	1	139	22	162	43	179	4	226	442	0
18:30 - 18:45	16	0	32	48	3	1	1	5	0	124	21	145	31	144	4	179	377	1
18:45 - 19:00	8	1	24	33	6	1	0	7	1	108	4	113	33	116	1	150	303	1
TOTAL	464	19	1495	1978	141	16	48	205	61	6514	478	7053	1299	6229	136	7664	16900	32
Trucks	5	0	8	13	1	1	2	4	1	110	8	119	15	99	2	116	252	1.5%
School Buses	4	0	8	12	0	0	4	4	2	20	3	25	2	22	3	27	68	0.4%

TOTAL AND PEAK HOUR VOLUME DIAGRAMS

St. Andrews Rd AT Kay St-Chartwell Rd Date: 11/28/2016

12.0 HOUR TOTAL VOLUME
FROM 7:00 TO 15:00

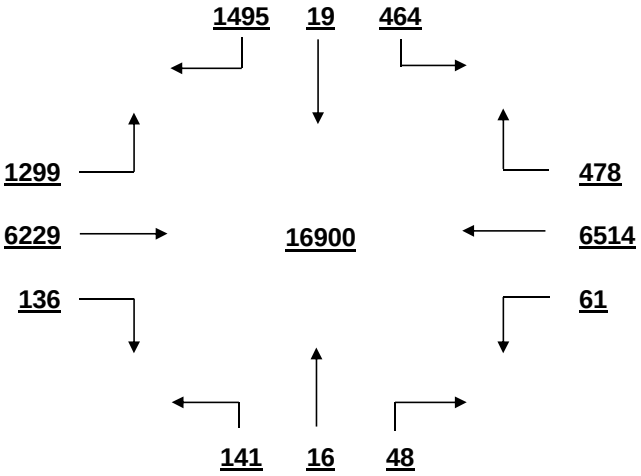

OVERALL PEAK HOUR VOLUME
FROM 16:30 TO 17:30

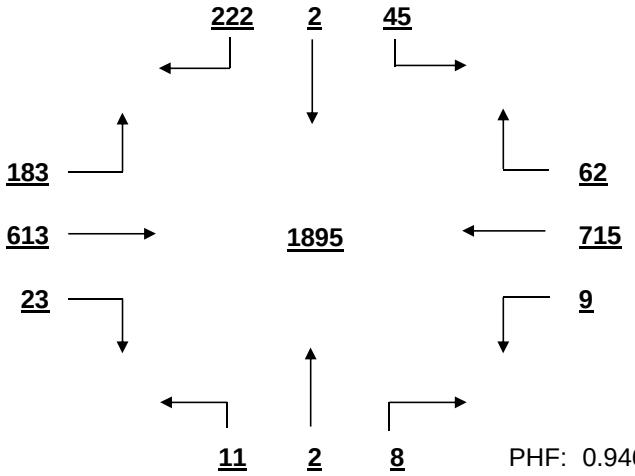

PHF: 0.946

AM PEAK HOUR VOLUME (0:00-10:45)
FROM 7:15 TO 8:15

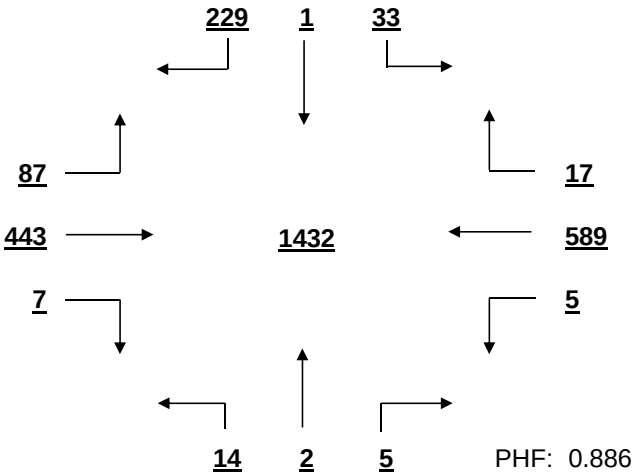

PHF: 0.886

PM PEAK HOUR VOLUME (14:15-23:45)
FROM 16:30 TO 17:30

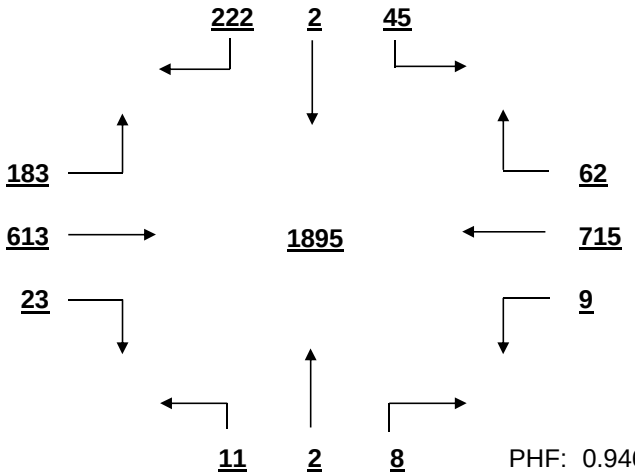

PHF: 0.946

MID-DAY PEAK HOUR VOLUME (11:00-14:00)
FROM 12:15 TO 13:15

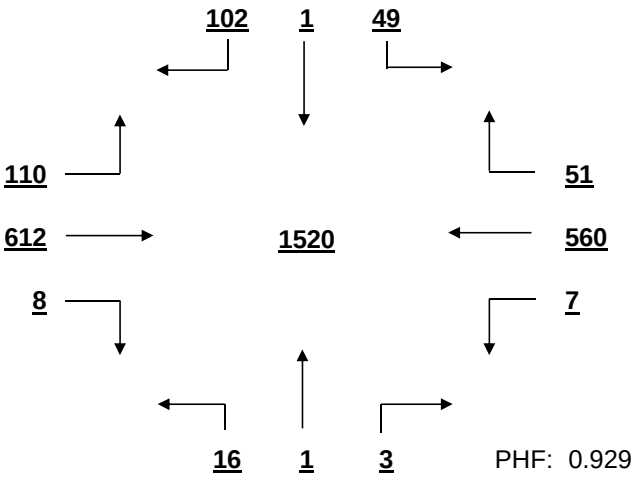

PHF: 0.929

OTHER HOUR VOLUME
FROM 7:00 TO 8:00

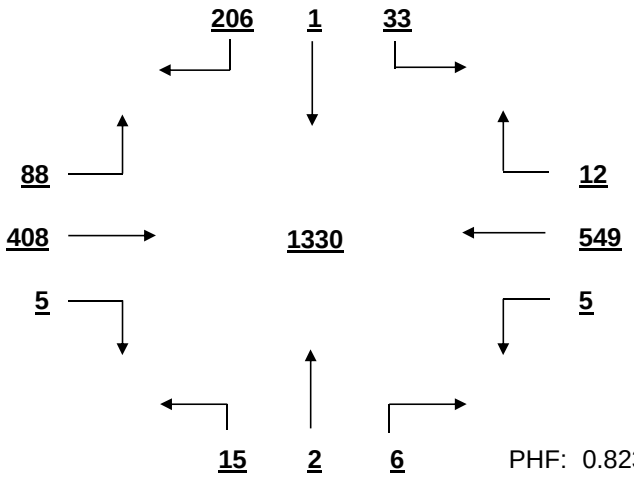

PHF: 0.823

SIGNAL WARRANT ANALYSIS

St. Andrews Rd AT Kay St-Chartwell Rd Date: 11/28/2016

Minor Street Volume, percent of total = 12.9%
Percent of Left Turns from Minor Street = 27.7%
Percent of Right Turns from Minor Street = 70.7%
Percent of Minor Street Right Turns to Remove from Warrant Analysis = 0%
WARRANT BASIS = **100%**

Warrant No. 1 - Vehicular Volume is met

Condition A - Minimum Vehicular Volume is not met

Average Major Street % of Warrant	Average Minor Street % of Warrant
1226.4 / 600 = 204%	164.8 / 150 = 110%

Hourly percent of warrant

	7:00-8:00	8:00-9:00	9:00-10:00	10:00-11:00	11:00-12:00	12:00-13:00	13:00-14:00	14:00-15:00	15:00-16:00	16:00-17:00	17:00-18:00	18:00-19:00
Major St.	178%	182%	144%	153%	172%	212%	218%	218%	221%	259%	269%	229%
Minor St.	160%	83%	79%	67%	81%	113%	88%	112%	121%	149%	156%	109%

Condition B - Interruption to Continuous Traffic is met

Average Major Street % of Warrant	Average Minor Street % of Warrant
1226.4 / 900 = 136%	164.8 / 75 = 220%

Hourly percent of warrant

	7:00-8:00	8:00-9:00	9:00-10:00	10:00-11:00	11:00-12:00	12:00-13:00	13:00-14:00	14:00-15:00	15:00-16:00	16:00-17:00	17:00-18:00	18:00-19:00
Major St.	119%	121%	96%	102%	115%	141%	145%	145%	147%	173%	179%	153%
Minor St.	320%	167%	159%	135%	163%	225%	176%	224%	243%	297%	312%	217%

80% Combination of Conditions A & B is met

Warrant No. 2 - Four Hour Vehicular Volume is met

Hourly percent of warrant

	7:00-8:00	8:00-9:00	9:00-10:00	10:00-11:00	11:00-12:00	12:00-13:00	13:00-14:00	14:00-15:00	15:00-16:00	16:00-17:00	17:00-18:00	18:00-19:00
Minor St.	188%	102%	65%	61%	90%	178%	145%	184%	203%	279%	293%	204%

Warrant No. 3 - Peak Hour is met

Percent of warrant		Percent of warrant
Overall Peak Hour: 16:30-17:30	Higher Volume Side Street Peak Hour: 16:30-17:30	
Minor St. 226%	Minor St. 226%	

Warrant No. 4 - Pedestrian Volume. Pedestrian volume shown are minumum volumes assuming heavy major street traffic. If these volumes are met, warrant 4 requires further engineering analysis

S

Minimum 4 hour ped. volume crossing major street: 107

Minimum peak hour ped. volume crossing major street: 133

Number of pedestrians crossing major street

	7:00-8:00	8:00-9:00	9:00-10:00	10:00-11:00	11:00-12:00	12:00-13:00	13:00-14:00	14:00-15:00	15:00-16:00	16:00-17:00	17:00-18:00	18:00-19:00
Major t.	0	0	0	0	0	0	0	2	0	0	0	1

Warrant No. 7 - Crash Experience (Requires 3 criteria analysis by engineering)

Total Number: 0 From: 1/1/2005 to 1/1/2008
Accident Rate: 0.00 per million entering vehicles

Types of Accidents	No.	/	Avg.		No.	/	Avg.
Right Angle	0	/	0.0	Rear End	0	/	0.0
Lost Control	0	/	0.0	Side Swipe	0	/	0.0
Left Turn	0	/	0.0	Other	0	/	0.0

SOUTH CAROLINA DEPARTMENT OF TRANSPORTATION
DISTRICT 1
TRAFFIC ENGINEERING

County: Richland City: Columbia Date: 11/28/2016

Major Rt: Broad River Rd * Not on State System Minor Rt: St. Andrews Rd * Not on State System

Day of Week: Monday Weather: Clear Office: Short Counts JMS

Type of Control: Signal Speed Limit (major st) 40

Direction of Minor Street: E-W Intersection ADT - 36170 (Calc)

Number of Lanes (major st)* 2 Number of Lanes (minor st)* 2

* Each Direction

INTERSECTION VOLUME SUMMARY

	From N Broad River Rd				From S Broad River Rd				From E St. Andrews Rd				From W St. Andrews Rd				Total	Total
	LT	STR	RT	TOT	LT	STR	RT	TOT	LT	STR	RT	TOT	LT	STR	RT	TOT	Vol	Peds
7:00 - 7:15	3	236	48	287	26	174	13	213	13	8	1	22	50	5	36	91	613	0
7:15 - 7:30	1	271	35	307	37	224	9	270	23	8	3	34	67	8	48	123	734	0
7:30 - 7:45	2	303	42	347	57	243	29	329	19	10	3	32	60	6	35	101	809	0
7:45 - 8:00	2	288	51	341	57	248	27	332	24	13	8	45	65	12	45	122	840	2
8:00 - 8:15	6	207	59	272	47	213	22	282	26	9	10	45	65	15	41	121	720	0
8:15 - 8:30	4	221	0	225	49	200	25	274	20	12	4	36	62	9	42	113	648	0
8:30 - 8:45	3	204	46	253	32	193	6	231	23	8	4	35	65	15	41	121	640	1
8:45 - 9:00	1	172	47	220	41	181	9	231	12	5	2	19	35	7	43	85	555	1
9:00 - 9:15	1	154	34	189	40	131	4	175	13	8	0	21	32	7	42	81	466	1
9:15 - 9:30	3	134	40	177	43	143	8	194	3	5	3	11	46	7	35	88	470	3
9:30 - 9:45	2	149	32	183	38	133	4	175	13	7	4	24	30	5	41	76	458	1
9:45 - 10:00	2	171	35	208	53	150	8	211	10	6	5	21	29	6	38	73	513	1
10:00 - 10:15	1	138	32	171	45	143	10	198	11	6	3	20	35	10	47	92	481	3
10:15 - 10:30	0	173	42	215	45	167	5	217	15	11	4	30	33	9	51	93	555	1
10:30 - 10:45	2	120	30	152	54	134	14	202	12	10	5	27	32	10	63	105	486	0
10:45 - 11:00	2	158	41	201	48	173	16	237	18	8	6	32	33	11	54	98	568	1
11:00 - 11:15	1	182	33	216	60	144	10	214	9	9	5	23	38	9	59	106	559	0
11:15 - 11:30	2	148	45	195	50	169	9	228	12	8	5	25	33	8	62	103	551	3
11:30 - 11:45	1	179	43	223	59	151	6	216	8	9	4	21	31	7	55	93	553	0
11:45 - 12:00	0	150	40	190	41	160	5	206	12	9	1	22	43	8	72	123	541	1
12:00 - 12:15	3	222	47	272	68	197	8	273	7	9	4	20	35	7	75	117	682	1
12:15 - 12:30	1	167	42	210	67	187	9	263	7	8	5	20	62	8	77	147	640	0
12:30 - 12:45	0	176	40	216	79	209	12	300	19	9	6	34	41	7	62	110	660	3
12:45 - 13:00	1	198	47	246	58	219	9	286	18	16	5	39	47	16	70	133	704	3
13:00 - 13:15	1	154	41	196	60	199	21	280	14	15	3	32	61	14	82	157	665	3
13:15 - 13:30	4	163	52	219	67	215	15	297	20	14	6	40	57	10	60	127	683	3
13:30 - 13:45	2	154	42	198	61	170	12	243	15	15	6	36	48	9	71	128	605	0
13:45 - 14:00	7	210	35	252	62	214	11	287	25	5	6	36	44	12	55	111	686	2
14:00 - 14:15	9	188	41	238	53	195	26	274	31	19	9	59	38	24	86	148	719	1
14:15 - 14:30	1	193	34	228	91	209	32	332	33	26	6	65	53	12	78	143	768	4
14:30 - 14:45	2	196	57	255	67	232	21	320	28	11	11	50	47	14	62	123	748	4
14:45 - 15:00	2	172	35	209	60	223	14	297	24	16	2	42	38	6	74	118	666	4
15:00 - 15:15	0	203	50	253	59	180	9	248	14	16	4	34	29	8	81	118	653	1
15:15 - 15:30	1	212	49	262	53	225	10	288	15	10	4	29	36	10	58	104	683	2
15:30 - 15:45	1	181	48	230	65	256	17	338	19	17	8	44	54	12	64	130	742	4
15:45 - 16:00	0	197	61	258	56	218	15	289	18	12	2	32	69	8	60	137	716	5
16:00 - 16:15	0	198	66	264	76	252	11	339	19	16	5	40	52	15	72	139	782	5
16:15 - 16:30	2	186	66	254	62	296	9	367	12	16	9	37	53	15	67	135	793	3
16:30 - 16:45	2	196	88	286	78	354	12	444	19	11	2	32	47	9	66	122	884	3
16:45 - 17:00	1	183	39	223	87	364	13	464	14	13	10	37	77	10	60	147	871	3
17:00 - 17:15	1	201	72	274	76	372	10	458	18	13	6	37	71	13	68	152	921	7
17:15 - 17:30	1	220	50	271	87	391	10	488	13	9	6	28	65	10	60	135	922	4
17:30 - 17:45	3	181	62	246	98	374	17	489	18	10	5	33	60	13	62	135	903	3
17:45 - 18:00	5	170	59	234	64	354	17	435	10	14	6	30	63	15	67	145	844	0
18:00 - 18:15	4	156	53	213	90	316	17	423	16	13	3	32	57	6	72	135	803	5
18:15 - 18:30	4	170	42	216	74	259	6	339	21	12	4	37	79	12	73	164	756	2
18:30 - 18:45	4	168	42	214	77	226	9	312	16	7	6	29	46	7	69	122	677	5
18:45 - 19:00	2	155	26	183	59	209	14	282	10	11	3	24	42	5	62	109	598	0
TOTAL	103	8928	2161	11192	2876	10589	625	14090	789	532	232	1553	2355	481	2863	5699	32534	99
Trucks	1	130	52	183	45	145	11	201	6	4	4	14	49	4	40	93	491	1.5%
School Buses	0	44	5	49	21	32	7	60	2	1	4	7	7	0	13	20	136	0.4%

TOTAL AND PEAK HOUR VOLUME DIAGRAMS

Broad River Rd AT St. Andrews Rd Date: 11/28/2016

12.0 HOUR TOTAL VOLUME
FROM 7:00 TO 15:00

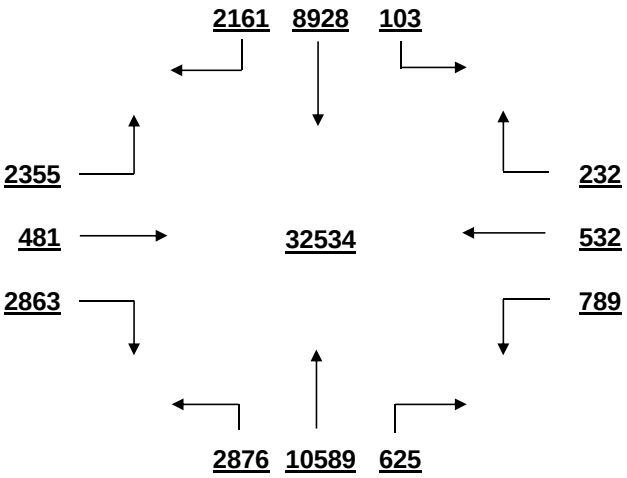

OVERALL PEAK HOUR VOLUME
FROM 16:45 TO 17:45

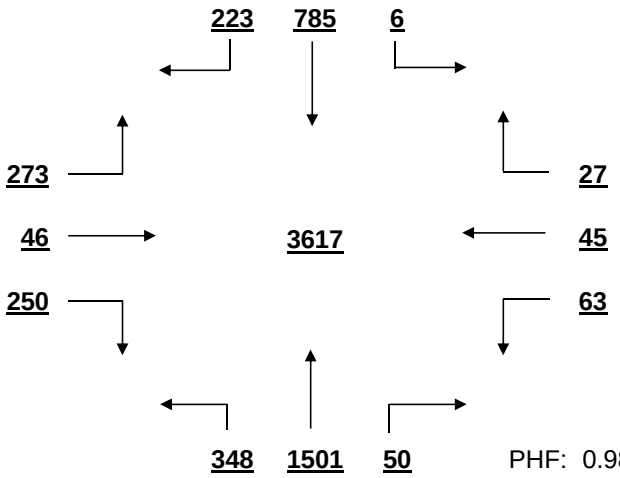

PHF: 0.981

AM PEAK HOUR VOLUME (0:00-10:45)
FROM 7:15 TO 8:15

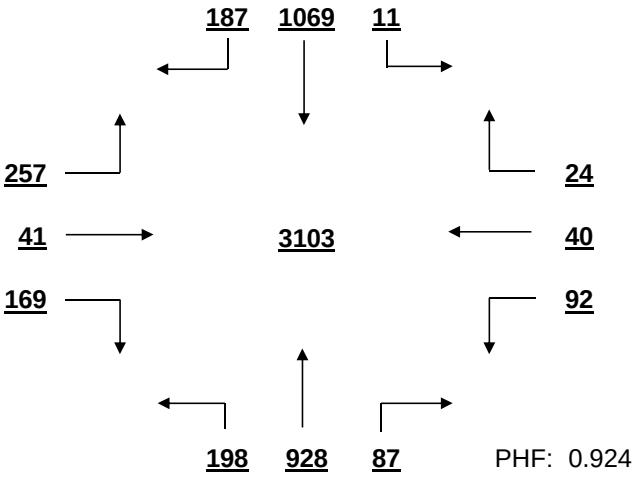

PHF: 0.924

PM PEAK HOUR VOLUME (14:15-23:45)
FROM 16:45 TO 17:45

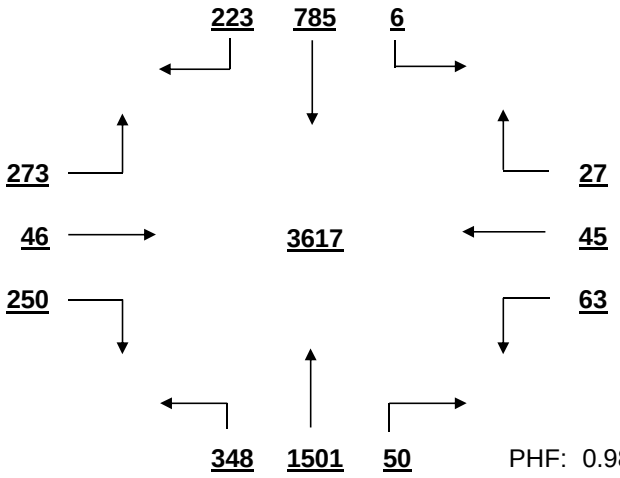

PHF: 0.981

MID-DAY PEAK HOUR VOLUME (11:00-14:00)
FROM 12:30 TO 13:30

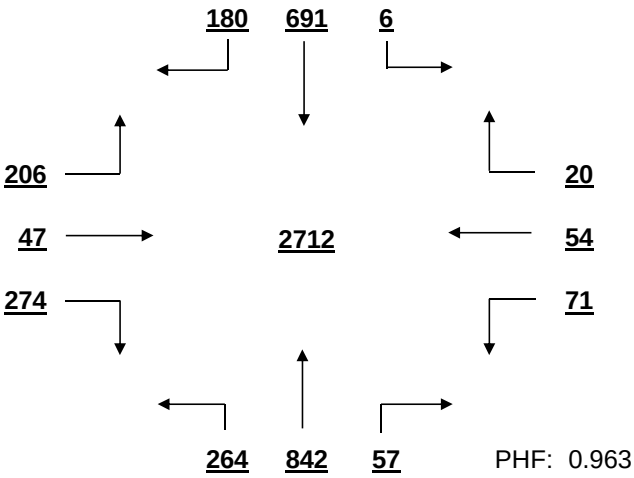

PHF: 0.963

OTHER HOUR VOLUME
FROM 7:00 TO 8:00

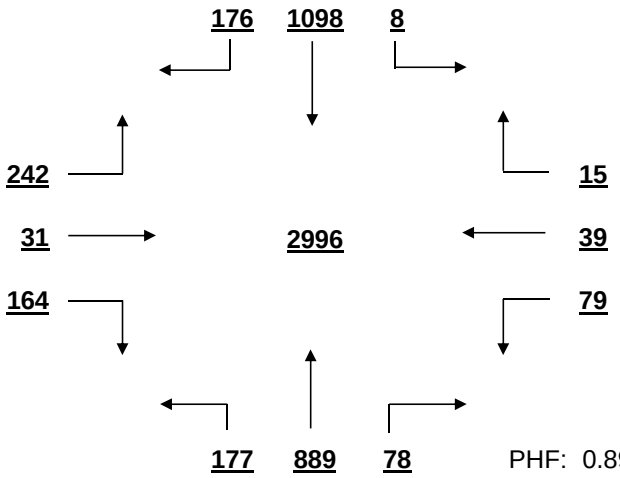

PHF: 0.892

SIGNAL WARRANT ANALYSIS

Broad River Rd AT St. Andrews Rd Date: 11/28/2016

Minor Street Volume, percent of total = 22.3%
Percent of Left Turns from Minor Street = 43.4%
Percent of Right Turns from Minor Street = 42.7%
Percent of Minor Street Right Turns to Remove from Warrant Analysis = 0%
WARRANT BASIS = **100%**

Warrant No. 1 - Vehicular Volume is met

Condition A - Minimum Vehicular Volume is met

Average Major Street % of Warrant				Average Minor Street % of Warrant			
2106.8	/ 600	=	351%	474.9	/ 200	=	237%

Hourly percent of warrant

	7:00 - 8:00	8:00 - 9:00	9:00 - 10:00	10:00 - 11:00	11:00 - 12:00	12:00 - 13:00	13:00 - 14:00	14:00 - 15:00	15:00 - 16:00	16:00 - 17:00	17:00 - 18:00	18:00 - 19:00
Major St.	404%	331%	252%	266%	281%	344%	329%	359%	361%	440%	483%	364%
Minor St.	219%	220%	159%	194%	213%	254%	262%	266%	245%	272%	284%	265%

Condition B - Interruption to Continuous Traffic is met

Average Major Street % of Warrant				Average Minor Street % of Warrant			
2106.8	/ 900	=	234%	474.9	/ 100	=	475%

Hourly percent of warrant

	7:00 - 8:00	8:00 - 9:00	9:00 - 10:00	10:00 - 11:00	11:00 - 12:00	12:00 - 13:00	13:00 - 14:00	14:00 - 15:00	15:00 - 16:00	16:00 - 17:00	17:00 - 18:00	18:00 - 19:00
Major St.	270%	221%	168%	177%	188%	230%	219%	239%	241%	293%	322%	242%
Minor St.	437%	440%	318%	388%	425%	507%	523%	532%	489%	543%	567%	530%

80% Combination of Conditions A & B is met

Warrant No. 2 - Four Hour Vehicular Volume is met

Hourly percent of warrant

	7:00 - 8:00	8:00 - 9:00	9:00 - 10:00	10:00 - 11:00	11:00 - 12:00	12:00 - 13:00	13:00 - 14:00	14:00 - 15:00	15:00 - 16:00	16:00 - 17:00	17:00 - 18:00	18:00 - 19:00
Minor St.	380%	383%	277%	337%	370%	441%	455%	463%	425%	472%	493%	461%

Warrant No. 3 - Peak Hour is met

Overall Peak Hour: 16:45 - 17:45 — Percent of warrant
Minor St. 379%

Higher Volume Side Street Peak Hour: 17:30 - 18:30 — Percent of warrant
Minor St. 386%

Warrant No. 4 - Pedestrian Volume. Pedestrian volume shown are minumum volumes assuming heavy major street traffic. If these volumes are met, warrant 4 requires further engineering analysis

S

Minimum 4 hour ped. volume crossing major street: 107

Minimum peak hour ped. volume crossing major street: 133

Number of pedestrians crossing major street

	7:00 - 8:00	8:00 - 9:00	9:00 - 10:00	10:00 - 11:00	11:00 - 12:00	12:00 - 13:00	13:00 - 14:00	14:00 - 15:00	15:00 - 16:00	16:00 - 17:00	17:00 - 18:00	18:00 - 19:00
Major t.	0	0	2	1	0	2	4	1	5	5	4	4

Warrant No. 7 - Crash Experience (Requires 3 criteria analysis by engineering)

Total Number: 0 From: 1/1/2005 to 1/1/2008
Accident Rate: 0.00 per million entering vehicles

Types of Accidents	No.	/	Avg.		No.	/	Avg.
Right Angle	0	/	0.0	Rear End	0	/	0.0
Lost Control	0	/	0.0	Side Swipe	0	/	0.0
Left Turn	0	/	0.0	Other	0	/	0.0

SOUTH CAROLINA DEPARTMENT OF TRANSPORTATION
DISTRICT 1
TRAFFIC ENGINEERING

County: Richland City: Columbia Date: 11/22/2016

Major Rt: Browning-Burning Tree * Not on State System Minor Rt: Center Point Rd Clear

Day of Week: Tuesday Weather: Clear Office: Short Counts JMS

Type of Control: Stop Sign Speed Limit (major st) 40

Direction of Minor Street: N-S Intersection ADT - 12490 (Calc)

Number of Lanes (major st)* 1 Number of Lanes (minor st)* 1

* Each Direction

INTERSECTION VOLUME SUMMARY

	From N Center Point Rd				From S Center Point Rd				From E Browning-Burning T				From W Browning-Burning T				Total	Total
	LT	STR	RT	TOT	LT	STR	RT	TOT	LT	STR	RT	TOT	LT	STR	RT	TOT	Vol	Peds
7:00 - 7:15	1	0	0	1	0	0	0	0	0	32	3	35	9	42	0	51	87	1
7:15 - 7:30	0	0	1	1	0	0	0	0	0	47	0	47	27	64	0	91	139	0
7:30 - 7:45	0	0	1	1	0	0	0	0	0	38	7	45	30	108	0	138	184	0
7:45 - 8:00	0	0	2	2	0	0	0	0	0	28	7	35	50	130	0	180	217	0
8:00 - 8:15	0	0	4	4	0	0	0	0	0	38	6	44	37	98	0	135	183	0
8:15 - 8:30	0	0	0	0	0	0	0	0	0	40	4	44	29	93	0	122	166	0
8:30 - 8:45	1	0	2	3	0	0	0	0	0	33	6	39	21	60	0	81	123	0
8:45 - 9:00	1	0	1	2	0	0	0	0	0	29	1	30	19	53	0	72	104	0
9:00 - 9:15	1	0	5	6	0	0	0	0	0	41	1	42	19	56	0	75	123	0
9:15 - 9:30	0	0	2	2	0	0	0	0	0	34	2	36	28	40	0	68	106	0
9:30 - 9:45	2	0	4	6	0	0	0	0	0	34	2	36	14	38	0	52	94	1
9:45 - 10:00	0	0	7	7	0	0	0	0	0	31	2	33	25	31	0	56	96	0
10:00 - 10:15	1	0	4	5	0	0	0	0	0	29	1	30	11	26	0	37	72	0
10:15 - 10:30	1	0	8	9	0	0	0	0	0	26	1	27	12	37	0	49	85	1
10:30 - 10:45	2	0	2	4	0	0	0	0	0	36	2	38	9	29	0	38	80	0
10:45 - 11:00	2	0	6	8	0	0	0	0	0	41	2	43	7	23	0	30	81	0
11:00 - 11:15	3	0	10	13	0	0	0	0	0	41	1	42	0	38	0	38	93	1
11:15 - 11:30	2	0	9	11	0	0	0	0	0	52	2	54	5	32	0	37	102	0
11:30 - 11:45	9	0	20	29	0	0	0	0	0	62	2	64	8	22	0	30	123	0
11:45 - 12:00	2	0	24	26	0	0	0	0	0	51	0	51	9	38	0	47	124	0
12:00 - 12:15	4	0	40	44	0	0	0	0	0	63	3	66	3	34	0	37	147	0
12:15 - 12:30	2	0	23	25	0	0	0	0	0	52	3	55	14	41	0	55	135	0
12:30 - 12:45	2	0	8	10	0	0	0	0	0	65	4	69	18	50	0	68	147	0
12:45 - 13:00	6	0	11	17	0	0	0	0	0	66	5	71	19	69	0	88	176	1
13:00 - 13:15	5	0	11	16	0	0	0	0	0	56	6	62	38	58	0	96	174	0
13:15 - 13:30	0	0	10	10	0	0	0	0	0	52	6	58	20	50	0	70	138	0
13:30 - 13:45	2	0	6	8	0	0	0	0	0	51	4	55	15	51	0	66	129	2
13:45 - 14:00	3	0	5	8	0	0	0	0	0	56	4	60	16	61	0	77	145	2
14:00 - 14:15	4	0	4	8	0	0	0	0	0	50	1	51	4	64	0	68	127	1
14:15 - 14:30	2	0	11	13	0	0	0	0	0	41	3	44	12	60	0	72	129	2
14:30 - 14:45	2	0	7	9	0	0	0	0	0	67	3	70	8	34	0	42	121	0
14:45 - 15:00	0	0	8	8	0	0	0	0	0	69	0	69	8	67	0	75	152	0
15:00 - 15:15	2	0	9	11	0	0	0	0	0	57	0	57	7	57	0	64	132	0
15:15 - 15:30	0	0	12	12	0	0	0	0	0	74	0	74	8	46	0	54	140	1
15:30 - 15:45	1	0	14	15	0	0	0	0	0	65	1	66	3	40	0	43	124	0
15:45 - 16:00	3	0	13	16	0	0	0	0	0	94	2	96	2	56	0	58	170	0
16:00 - 16:15	2	0	18	20	0	0	0	0	0	119	2	121	0	55	0	55	196	0
16:15 - 16:30	0	0	18	18	0	0	0	0	0	158	1	159	2	62	0	64	241	1
16:30 - 16:45	9	0	32	41	0	0	0	0	0	160	2	162	0	82	0	82	285	1
16:45 - 17:00	7	0	33	40	0	0	0	0	0	174	0	174	5	71	0	76	290	0
17:00 - 17:15	8	0	41	49	0	0	0	0	0	195	1	196	3	71	0	74	319	0
17:15 - 17:30	8	0	20	28	0	0	0	0	0	199	0	199	3	71	0	74	301	0
17:30 - 17:45	3	0	24	27	0	0	0	0	0	177	1	178	7	64	0	71	276	0
17:45 - 18:00	1	0	16	17	0	0	0	0	0	206	1	207	4	77	0	81	305	0
18:00 - 18:15	1	0	20	21	0	0	0	0	0	175	0	175	3	106	0	109	305	0
18:15 - 18:30	0	0	7	7	0	0	0	0	0	165	1	166	2	143	0	145	318	0
18:30 - 18:45	1	0	6	7	0	0	0	0	0	164	1	165	2	147	0	149	321	0
18:45 - 19:00	0	0	5	5	0	0	0	0	0	117	1	118	1	110	0	111	234	0
TOTAL	106	0	544	650	0	0	0	0	0	3750	108	3858	596	2955	0	3551	8059	15
Trucks	0	0	2	2	0	0	0	0	0	16	0	16	2	10	0	12	30	0.4%
School Buses	0	0	0	0	0	0	0	0	0	18	0	18	1	14	0	15	33	0.4%

TOTAL AND PEAK HOUR VOLUME DIAGRAMS

Browning-Burning Tree AT Center Point Rd Date: 11/22/2016

12.0 HOUR TOTAL VOLUME
FROM 7:00 TO 15:00

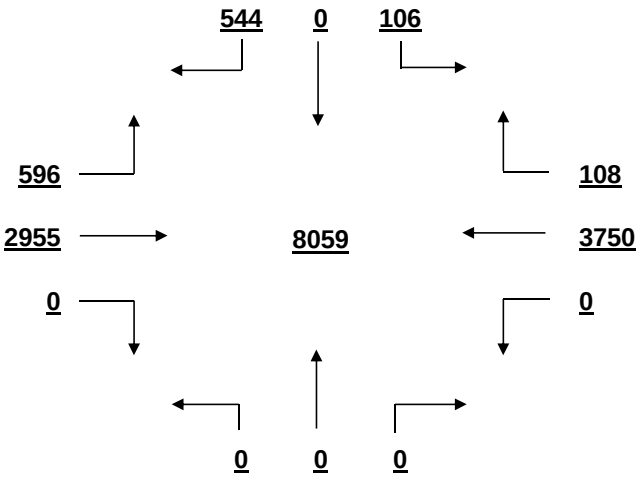

OVERALL PEAK HOUR VOLUME
FROM 17:45 TO 18:45

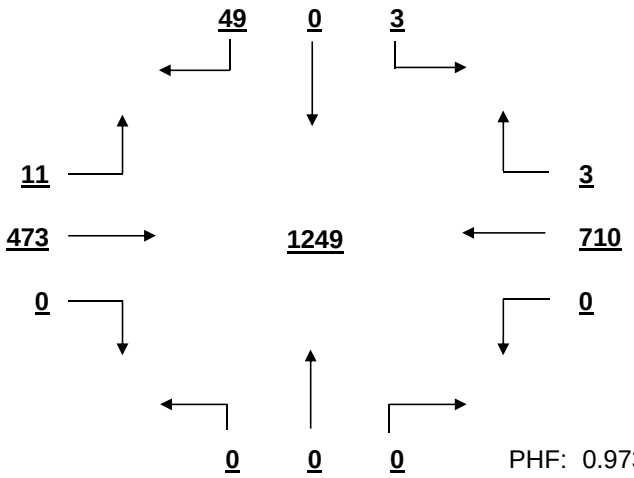

PHF: 0.973

AM PEAK HOUR VOLUME (0:00-10:45)
FROM 7:30 TO 8:30

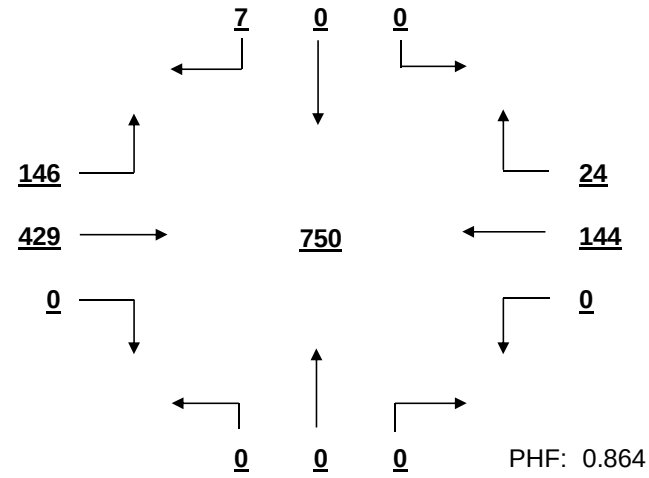

PHF: 0.864

PM PEAK HOUR VOLUME (14:15-23:45)
FROM 17:45 TO 18:45

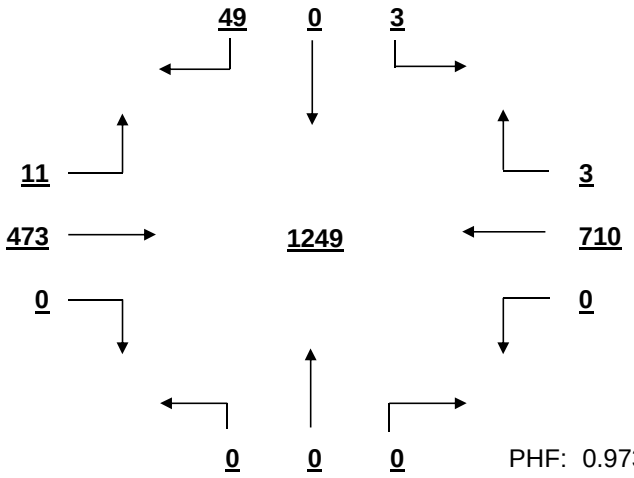

PHF: 0.973

MID-DAY PEAK HOUR VOLUME (11:00-14:00)
FROM 12:30 TO 13:30

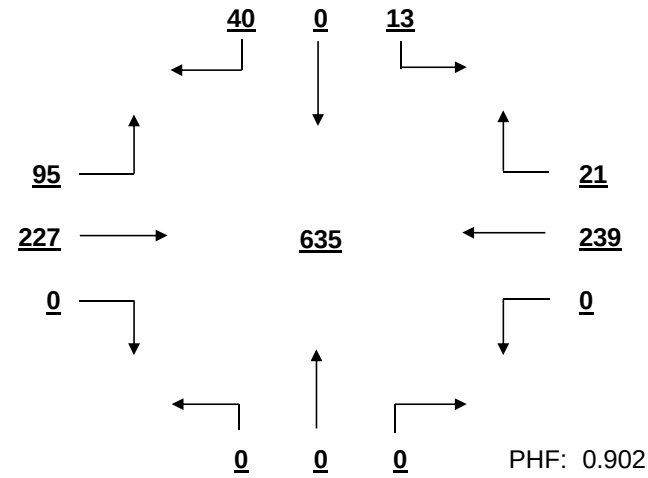

PHF: 0.902

OTHER HOUR VOLUME
FROM 7:00 TO 8:00

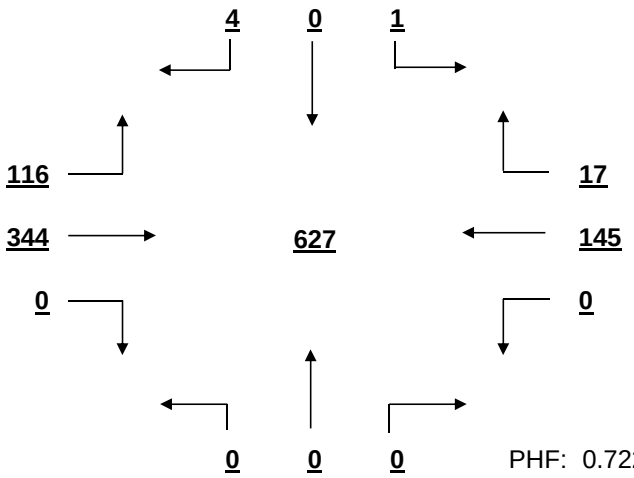

PHF: 0.722

SIGNAL WARRANT ANALYSIS

Browning-Burning Tree AT Center Point Rd Date: 11/22/2016

Minor Street Volume, percent of total = 8.1%
Percent of Left Turns from Minor Street = 16.3%
Percent of Right Turns from Minor Street = 83.7%
Percent of Minor Street Right Turns to Remove from Warrant Analysis = 0%
WARRANT BASIS = **100%**

Warrant No. 1 - Vehicular Volume is not met

Condition A - Minimum Vehicular Volume is not met

Average Major Street % of Warrant				Average Minor Street % of Warrant			
617.4	/ 500	=	123%	54.2	/ 150	=	36%

Hourly percent of warrant

	7:00 - 8:00	8:00 - 9:00	9:00 - 10:00	10:00 - 11:00	11:00 - 12:00	12:00 - 13:00	13:00 - 14:00	14:00 - 15:00	15:00 - 16:00	16:00 - 17:00	17:00 - 18:00	18:00 - 19:00
Major St.	124%	113%	80%	58%	73%	102%	109%	98%	102%	179%	216%	228%
Minor St.	3%	6%	14%	17%	53%	64%	28%	25%	36%	79%	81%	27%

Condition B - Interruption to Continuous Traffic is not met

Average Major Street % of Warrant				Average Minor Street % of Warrant			
617.4	/ 750	=	82%	54.2	/ 75	=	72%

Hourly percent of warrant

	7:00 - 8:00	8:00 - 9:00	9:00 - 10:00	10:00 - 11:00	11:00 - 12:00	12:00 - 13:00	13:00 - 14:00	14:00 - 15:00	15:00 - 16:00	16:00 - 17:00	17:00 - 18:00	18:00 - 19:00
Major St.	83%	76%	53%	39%	48%	68%	73%	65%	68%	119%	144%	152%
Minor St.	7%	12%	28%	35%	105%	128%	56%	51%	72%	159%	161%	53%

80% Combination of Conditions A & B is not met

Warrant No. 2 - Four Hour Vehicular Volume is not met

Hourly percent of warrant

	7:00 - 8:00	8:00 - 9:00	9:00 - 10:00	10:00 - 11:00	11:00 - 12:00	12:00 - 13:00	13:00 - 14:00	14:00 - 15:00	15:00 - 16:00	16:00 - 17:00	17:00 - 18:00	18:00 - 19:00
Minor St.	2%	4%	7%	7%	24%	37%	17%	14%	21%	97%	144%	53%

Warrant No. 3 - Peak Hour is not met

Overall Peak Hour: 17:45 - 18:45 — Percent of warrant — Minor St. 35%

Higher Volume Side Street Peak Hour: 16:30 - 17:30 — Percent of warrant — Minor St. 82%

Warrant No. 4 - Pedestrian Volume. Pedestrian volume shown are minumum volumes assuming heavy major street traffic. If these volumes are met, warrant 4 requires further engineering analysis

S

Minimum 4 hour ped. volume crossing major street: 107

Minimum peak hour ped. volume crossing major street: 133

Number of pedestrians crossing major street

	7:00 - 8:00	8:00 - 9:00	9:00 - 10:00	10:00 - 11:00	11:00 - 12:00	12:00 - 13:00	13:00 - 14:00	14:00 - 15:00	15:00 - 16:00	16:00 - 17:00	17:00 - 18:00	18:00 - 19:00
Major t.	0	0	1	1	1	0	2	3	1	1	0	0

Warrant No. 7 - Crash Experience (Requires 3 criteria analysis by engineering)

Total Number: 0 From: 1/1/2005 to 1/1/2008

Accident Rate: 0.00 per million entering vehicles

Types of Accidents	No.	/	Avg.		No.	/	Avg.
Right Angle	0	/	0.0	Rear End	0	/	0.0
Lost Control	0	/	0.0	Side Swipe	0	/	0.0
Left Turn	0	/	0.0	Other	0	/	0.0

SOUTH CAROLINA DEPARTMENT OF TRANSPORTATION
DISTRICT 1
TRAFFIC ENGINEERING

County: Richland City: Columbia Date: 11/28/2016

Major Rt: Browning Rd * Not on State System Minor Rt: Zimalcrest Dr Clear

Day of Week: Monday Weather: Clear Office: Short Counts JMS

Type of Control: Stop Sign Speed Limit (major st) 40

Direction of Minor Street: N-S Intersection ADT - 12220 (Calc)

Number of Lanes (major st)* 1 Number of Lanes (minor st)* 1

* Each Direction

INTERSECTION VOLUME SUMMARY

	From N Zimalcrest Dr				From S Zimalcrest Dr				From E Browning Rd				From W Browning Rd				Total	Total
	LT	STR	RT	TOT	LT	STR	RT	TOT	LT	STR	RT	TOT	LT	STR	RT	TOT	Vol	Peds
7:00 - 7:15	22	0	31	53	0	0	0	0	0	8	26	34	15	29	0	44	131	1
7:15 - 7:30	36	0	31	67	0	0	0	0	0	16	23	39	18	43	0	61	167	0
7:30 - 7:45	40	0	23	63	0	0	0	0	0	25	21	46	16	74	0	90	199	0
7:45 - 8:00	48	0	18	66	0	0	0	0	0	23	23	46	27	113	0	140	252	0
8:00 - 8:15	26	0	17	43	0	0	0	0	0	21	14	35	8	73	0	81	159	0
8:15 - 8:30	29	0	0	29	0	0	0	0	0	28	18	46	10	64	0	74	149	0
8:30 - 8:45	27	0	10	37	0	0	0	0	0	22	16	38	9	47	0	56	131	0
8:45 - 9:00	21	0	12	33	0	0	0	0	0	22	17	39	17	46	0	63	135	0
9:00 - 9:15	19	0	11	30	0	0	0	0	0	14	8	22	13	36	0	49	101	0
9:15 - 9:30	17	0	10	27	0	0	0	0	0	21	22	43	13	25	0	38	108	0
9:30 - 9:45	15	0	12	27	0	0	0	0	0	22	10	32	5	28	0	33	92	1
9:45 - 10:00	12	0	11	23	0	0	0	0	0	12	11	23	10	21	0	31	77	0
10:00 - 10:15	10	0	9	19	0	0	0	0	0	13	10	23	9	16	0	25	67	0
10:15 - 10:30	12	0	11	23	0	0	0	0	0	17	12	29	5	13	0	18	70	1
10:30 - 10:45	14	0	9	23	0	0	0	0	0	14	14	28	11	12	0	23	74	0
10:45 - 11:00	10	0	19	29	0	0	0	0	0	23	17	40	10	11	0	21	90	0
11:00 - 11:15	11	0	9	20	0	0	0	0	0	25	16	41	17	13	0	30	91	0
11:15 - 11:30	23	0	15	38	0	0	0	0	0	26	11	37	11	23	0	34	109	0
11:30 - 11:45	10	0	11	21	0	0	0	0	0	29	22	51	14	25	0	39	111	0
11:45 - 12:00	18	0	15	33	0	0	0	0	0	37	13	50	21	33	0	54	137	0
12:00 - 12:15	9	0	22	31	0	0	0	0	0	58	17	75	14	26	0	40	146	1
12:15 - 12:30	21	0	19	40	0	0	0	0	0	42	12	54	10	33	0	43	137	0
12:30 - 12:45	11	0	13	24	0	0	0	0	0	31	27	58	27	31	0	58	140	0
12:45 - 13:00	27	0	15	42	0	0	0	0	0	36	21	57	20	29	0	49	148	1
13:00 - 13:15	19	0	20	39	0	0	0	0	0	45	23	68	15	41	0	56	163	0
13:15 - 13:30	13	0	24	37	0	0	0	0	0	32	17	49	15	33	0	48	134	0
13:30 - 13:45	26	0	17	43	0	0	0	0	0	30	21	51	17	36	0	53	147	0
13:45 - 14:00	16	0	19	35	0	0	0	0	0	39	24	63	26	29	0	55	153	0
14:00 - 14:15	21	0	19	40	0	0	0	0	0	31	32	63	19	37	0	56	159	0
14:15 - 14:30	17	0	20	37	0	0	0	0	0	42	27	69	14	22	0	36	142	1
14:30 - 14:45	21	0	25	46	0	0	0	0	0	37	22	59	20	26	0	46	151	0
14:45 - 15:00	27	0	29	56	0	0	0	0	0	32	33	65	15	25	0	40	161	0
15:00 - 15:15	25	0	27	52	0	0	0	0	0	25	14	39	18	38	0	56	147	0
15:15 - 15:30	17	0	17	34	0	0	0	0	0	36	21	57	11	31	0	42	133	0
15:30 - 15:45	24	0	30	54	0	0	0	0	0	39	28	67	21	28	0	49	170	0
15:45 - 16:00	15	0	23	38	0	0	0	0	0	34	27	61	22	23	0	45	144	0
16:00 - 16:15	28	0	24	52	0	0	0	0	0	68	26	94	26	32	0	58	204	0
16:15 - 16:30	21	0	25	46	0	0	0	0	0	72	31	103	31	38	0	69	218	0
16:30 - 16:45	29	0	21	50	0	0	0	0	0	95	32	127	22	32	0	54	231	0
16:45 - 17:00	22	0	31	53	0	0	0	0	0	117	45	162	21	41	0	62	277	0
17:00 - 17:15	21	0	24	45	0	0	0	0	0	126	46	172	32	37	0	69	286	0
17:15 - 17:30	28	0	28	56	0	0	0	0	0	153	58	211	21	38	0	59	326	0
17:30 - 17:45	20	0	20	40	0	0	0	0	0	159	38	197	28	31	0	59	296	0
17:45 - 18:00	19	0	29	48	0	0	0	0	0	150	54	204	27	35	0	62	314	0
18:00 - 18:15	18	0	28	46	0	0	0	0	0	94	37	131	26	22	0	48	225	0
18:15 - 18:30	11	0	20	31	0	0	0	0	0	67	32	99	36	15	0	51	181	0
18:30 - 18:45	19	0	23	42	0	0	0	0	0	30	30	60	26	18	0	44	146	0
18:45 - 19:00	10	0	23	33	0	0	0	0	0	27	34	61	18	18	0	36	130	0
TOTAL	975	0	919	1894	0	0	0	0	0	2165	1153	3318	857	1590	0	2447	7659	6
Trucks	6	0	5	11	0	0	0	0	0	6	10	16	3	6	0	9	36	0.5%
School Buses	4	0	8	12	0	0	0	0	0	5	3	8	1	10	0	11	31	0.4%

TOTAL AND PEAK HOUR VOLUME DIAGRAMS

Browning Rd AT Zimalcrest Dr Date: 11/28/2016

12.0 HOUR TOTAL VOLUME
FROM 7:00 TO 15:00

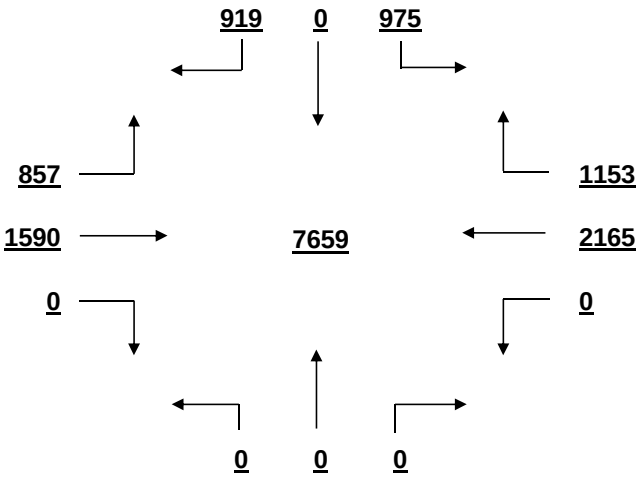

OVERALL PEAK HOUR VOLUME
FROM 17:00 TO 18:00

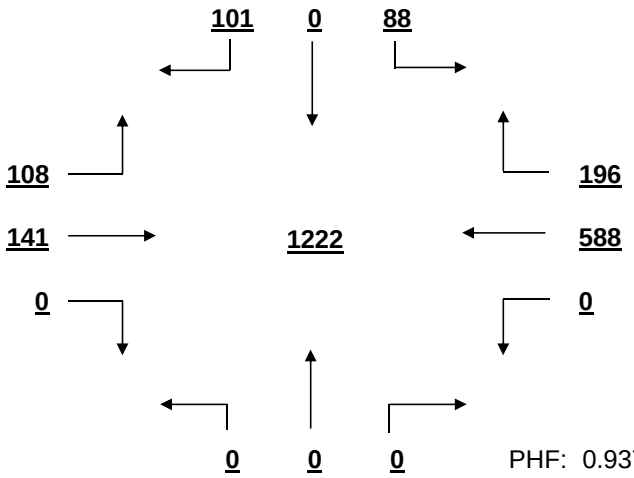

PHF: 0.937

AM PEAK HOUR VOLUME (0:00-10:45)
FROM 7:15 TO 8:15

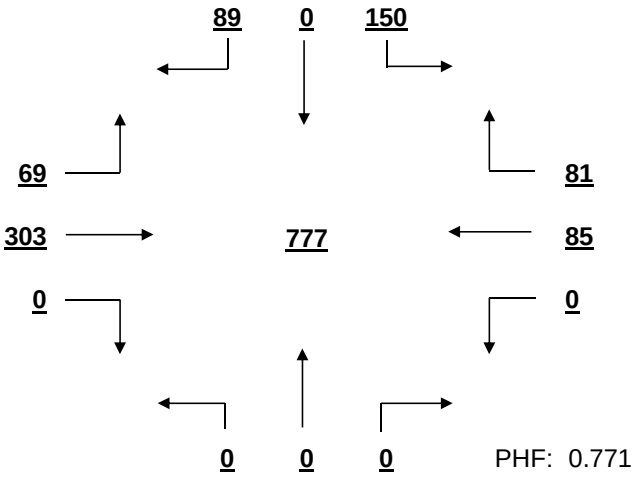

PHF: 0.771

PM PEAK HOUR VOLUME (14:15-23:45)
FROM 17:00 TO 18:00

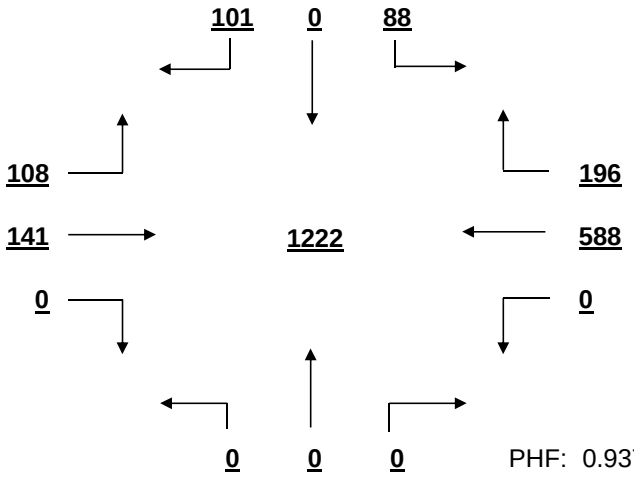

PHF: 0.937

MID-DAY PEAK HOUR VOLUME (11:00-14:00)
FROM 13:00 TO 14:00

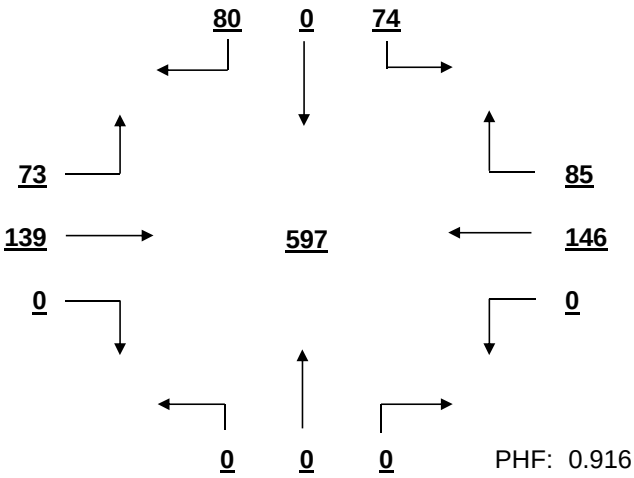

PHF: 0.916

OTHER HOUR VOLUME
FROM 7:00 TO 8:00

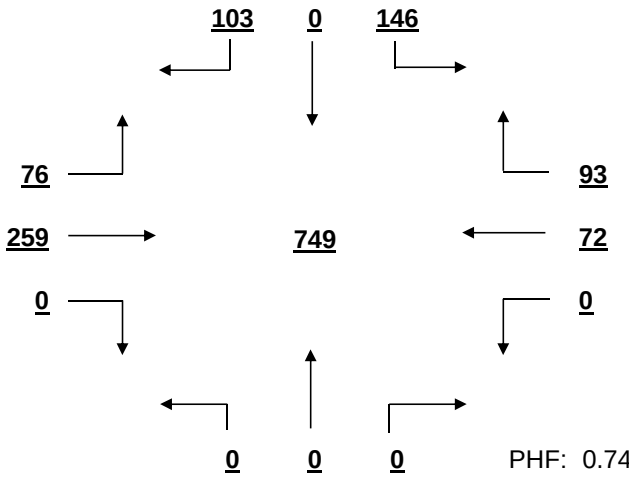

PHF: 0.743

SIGNAL WARRANT ANALYSIS

Browning Rd AT Zimalcrest Dr Date: 11/28/2016

Minor Street Volume, percent of total = 24.7%
Percent of Left Turns from Minor Street = 51.5%
Percent of Right Turns from Minor Street = 48.5%
Percent of Minor Street Right Turns to Remove from Warrant Analysis = 0%
WARRANT BASIS = **100%**

Warrant No. 1 - Vehicular Volume is not met

Condition A - Minimum Vehicular Volume is not met

Average Major Street % of Warrant				Average Minor Street % of Warrant			
480.4	/ 500	=	96%	157.8	/ 150	=	105%

Hourly percent of warrant

	7:00-8:00	8:00-9:00	9:00-10:00	10:00-11:00	11:00-12:00	12:00-13:00	13:00-14:00	14:00-15:00	15:00-16:00	16:00-17:00	17:00-18:00	18:00-19:00
Major St.	100%	86%	54%	41%	67%	87%	89%	87%	83%	146%	207%	106%
Minor St.	166%	95%	71%	63%	75%	91%	103%	119%	119%	134%	126%	101%

Condition B - Interruption to Continuous Traffic is not met

Average Major Street % of Warrant				Average Minor Street % of Warrant			
480.4	/ 750	=	64%	157.8	/ 75	=	210%

Hourly percent of warrant

	7:00-8:00	8:00-9:00	9:00-10:00	10:00-11:00	11:00-12:00	12:00-13:00	13:00-14:00	14:00-15:00	15:00-16:00	16:00-17:00	17:00-18:00	18:00-19:00
Major St.	67%	58%	36%	28%	45%	58%	59%	58%	55%	97%	138%	71%
Minor St.	332%	189%	143%	125%	149%	183%	205%	239%	237%	268%	252%	203%

80% Combination of Conditions A & B is not met

Warrant No. 2 - Four Hour Vehicular Volume is not met

Hourly percent of warrant

	7:00-8:00	8:00-9:00	9:00-10:00	10:00-11:00	11:00-12:00	12:00-13:00	13:00-14:00	14:00-15:00	15:00-16:00	16:00-17:00	17:00-18:00	18:00-19:00
Minor St.	96%	49%	29%	23%	33%	47%	54%	62%	59%	117%	205%	61%

Warrant No. 3 - Peak Hour is not met

		Percent of warrant			Percent of warrant
Overall Peak Hour:	17:00-18:00		Higher Volume Side Street Peak Hour:	7:00-8:00	
Minor St.		98%	Minor St.		58%

Warrant No. 4 - Pedestrian Volume. Pedestrian volume shown are minumum volumes assuming heavy major street traffic. If these volumes are met, warrant 4 requires further engineering analysis

S

Minimum 4 hour ped. volume crossing major street: 107

Minimum peak hour ped. volume crossing major street: 133

Number of pedestrians crossing major street

	7:00-8:00	8:00-9:00	9:00-10:00	10:00-11:00	11:00-12:00	12:00-13:00	13:00-14:00	14:00-15:00	15:00-16:00	16:00-17:00	17:00-18:00	18:00-19:00
Major t.	1	0	1	1	0	2	0	1	0	0	0	0

Warrant No. 7 - Crash Experience (Requires 3 criteria analysis by engineering)

Total Number: 0 From: 1/1/2005 to 1/1/2008

Accident Rate: 0.00 per million entering vehicles

Types of Accidents	No.	/	Avg.		No.	/	Avg.
Right Angle	0	/	0.0	Rear End	0	/	0.0
Lost Control	0	/	0.0	Side Swipe	0	/	0.0
Left Turn	0	/	0.0	Other	0	/	0.0

SOUTH CAROLINA DEPARTMENT OF TRANSPORTATION
DISTRICT 1
TRAFFIC ENGINEERING

County: Richland City: Columbia Date: 11/29/2016

Major Rt: Bush River Rd * Not on State System Minor Rt: Ashland Rd-Marydale Ln Clear

Day of Week: Tuesday Weather: Rain Office: Short Counts JMS

Type of Control: Stop Sign Speed Limit (major st) 40

Direction of Minor Street: N-S Intersection ADT - 14340 (Calc)

Number of Lanes (major st)* 1 Number of Lanes (minor st)* 1

* Each Direction

INTERSECTION VOLUME SUMMARY

	From N Ashland Rd-Marydal				From S Ashland Rd-Marydal				From E Bush River Rd				From W Bush River Rd				Total	Total
	LT	STR	RT	TOT	LT	STR	RT	TOT	LT	STR	RT	TOT	LT	STR	RT	TOT	Vol	Peds
7:00 - 7:15	26	0	2	28	0	0	0	0	0	49	16	65	4	141	0	145	238	0
7:15 - 7:30	24	0	3	27	0	0	0	0	2	38	9	49	9	173	0	182	258	0
7:30 - 7:45	56	0	2	58	1	0	0	1	2	64	12	78	6	189	2	197	334	1
7:45 - 8:00	84	0	7	91	0	0	0	0	2	82	19	103	1	219	1	221	415	0
8:00 - 8:15	42	0	0	42	0	0	1	1	4	55	15	74	1	149	5	155	272	0
8:15 - 8:30	67	3	0	70	2	4	0	6	6	53	16	75	0	177	2	179	330	0
8:30 - 8:45	33	4	1	38	0	1	3	4	2	46	13	61	0	155	5	160	263	0
8:45 - 9:00	35	0	1	36	0	0	1	1	0	58	17	75	3	114	2	119	231	0
9:00 - 9:15	14	1	1	16	0	0	0	0	0	42	18	60	3	86	1	90	166	0
9:15 - 9:30	13	0	1	14	0	0	1	1	1	69	15	85	1	62	1	64	164	0
9:30 - 9:45	16	0	2	18	0	3	0	3	1	55	16	72	6	52	0	58	151	0
9:45 - 10:00	26	2	3	31	0	0	0	0	2	47	11	60	23	32	2	57	148	0
10:00 - 10:15	28	7	4	39	0	4	1	5	2	63	15	80	1	68	3	72	196	0
10:15 - 10:30	20	2	1	23	1	1	1	3	4	46	14	64	1	61	1	63	153	0
10:30 - 10:45	12	1	4	17	2	1	0	3	2	51	10	63	1	62	2	65	148	0
10:45 - 11:00	21	1	2	24	0	1	1	2	1	71	13	85	1	76	3	80	191	0
11:00 - 11:15	10	1	0	11	0	2	0	2	2	76	21	99	2	59	0	61	173	0
11:15 - 11:30	19	0	3	22	3	0	1	4	1	61	14	76	1	50	0	51	153	0
11:30 - 11:45	14	0	1	15	1	2	2	5	2	90	29	121	5	82	0	87	228	0
11:45 - 12:00	17	1	4	22	4	1	0	5	1	57	28	86	2	69	2	73	186	0
12:00 - 12:15	14	2	1	17	1	0	3	4	5	86	22	113	3	73	4	80	214	0
12:15 - 12:30	12	1	2	15	1	2	3	6	2	80	24	106	2	70	2	74	201	0
12:30 - 12:45	17	1	3	21	2	0	0	2	1	88	30	119	1	82	2	85	227	0
12:45 - 13:00	24	0	7	31	0	2	2	4	0	95	25	120	6	100	0	106	261	0
13:00 - 13:15	19	1	2	22	1	1	1	3	3	94	31	128	5	83	1	89	242	0
13:15 - 13:30	22	0	2	24	1	1	1	3	0	74	27	101	9	80	1	90	218	0
13:30 - 13:45	23	1	1	25	0	1	2	3	1	84	19	104	3	71	0	74	206	0
13:45 - 14:00	29	0	5	34	0	0	2	2	2	82	13	97	4	90	1	95	228	0
14:00 - 14:15	16	2	0	18	0	2	2	4	2	62	12	76	4	58	1	63	161	0
14:15 - 14:30	21	1	1	23	0	0	2	2	0	69	9	78	3	64	0	67	170	0
14:30 - 14:45	20	1	0	21	1	3	0	4	1	97	21	119	2	70	1	73	217	0
14:45 - 15:00	26	2	6	34	3	1	1	5	1	99	19	119	2	84	1	87	245	0
15:00 - 15:15	30	0	6	36	1	0	2	3	1	93	23	117	3	82	0	85	241	0
15:15 - 15:30	16	0	0	16	0	1	0	1	3	104	25	132	2	81	0	83	232	0
15:30 - 15:45	10	0	3	13	0	0	0	0	0	68	11	79	0	53	0	53	145	1
15:45 - 16:00	11	1	2	14	0	1	1	2	1	110	15	126	1	59	0	60	202	0
16:00 - 16:15	14	2	7	23	1	1	2	4	0	75	17	92	1	60	1	62	181	0
16:15 - 16:30	21	1	6	28	0	2	1	3	0	181	34	215	5	89	1	95	341	0
16:30 - 16:45	24	0	5	29	1	1	3	5	0	148	19	167	0	79	0	79	280	0
16:45 - 17:00	24	0	7	31	1	0	0	1	3	156	32	191	1	51	0	52	275	0
17:00 - 17:15	23	1	4	28	5	0	2	7	2	205	41	248	1	82	0	83	366	0
17:15 - 17:30	32	0	2	34	3	1	0	4	2	196	44	242	0	87	1	88	368	0
17:30 - 17:45	22	0	2	24	0	0	0	0	1	221	33	255	2	80	1	83	362	0
17:45 - 18:00	15	0	4	19	1	1	0	2	3	207	32	242	2	73	0	75	338	0
18:00 - 18:15	15	3	2	20	0	0	1	1	3	140	36	179	2	52	0	54	254	0
18:15 - 18:30	8	0	8	16	0	0	0	0	2	176	46	224	0	59	0	59	299	0
18:30 - 18:45	16	4	2	22	3	3	3	9	2	157	34	193	1	63	1	65	289	0
18:45 - 19:00	11	4	8	23	0	2	3	5	19	97	28	144	2	47	1	50	222	0
TOTAL	1112	51	140	1303	40	46	49	135	97	4517	1043	5657	138	4098	52	4288	11383	2
Trucks	2	0	1	3	0	0	1	1	0	36	3	39	1	29	0	30	73	0.6%
School Buses	2	0	8	10	0	0	0	0	0	14	1	15	3	6	0	9	34	0.3%

TOTAL AND PEAK HOUR VOLUME DIAGRAMS

Bush River Rd AT Ashland Rd-Marydale Ln Date: 11/29/2016

12.0 HOUR TOTAL VOLUME
FROM 7:00 TO 15:00

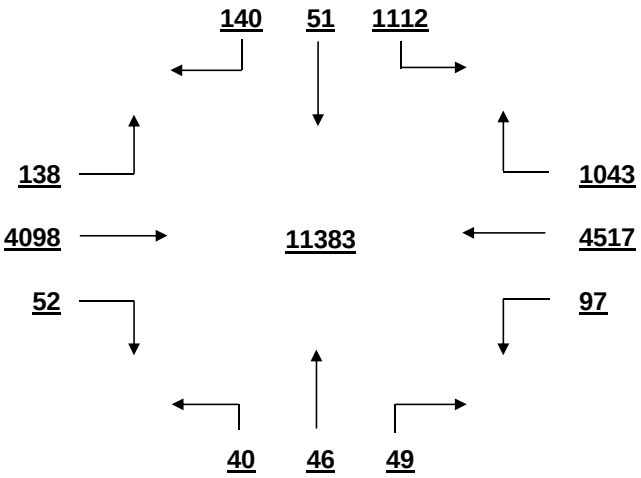

OVERALL PEAK HOUR VOLUME
FROM 17:00 TO 18:00

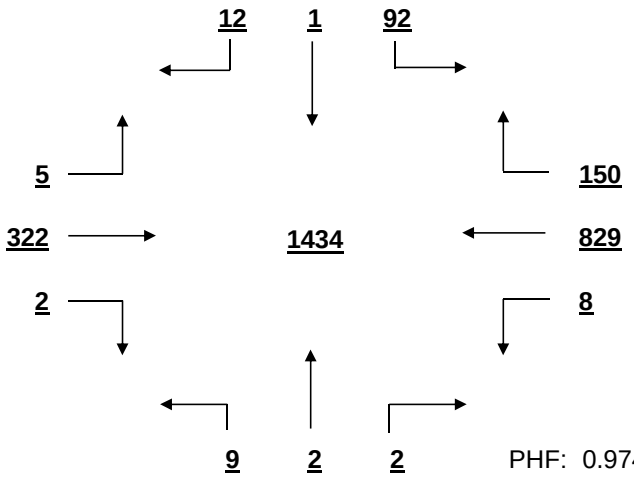

PHF: 0.974

AM PEAK HOUR VOLUME (0:00-10:45)
FROM 7:30 TO 8:30

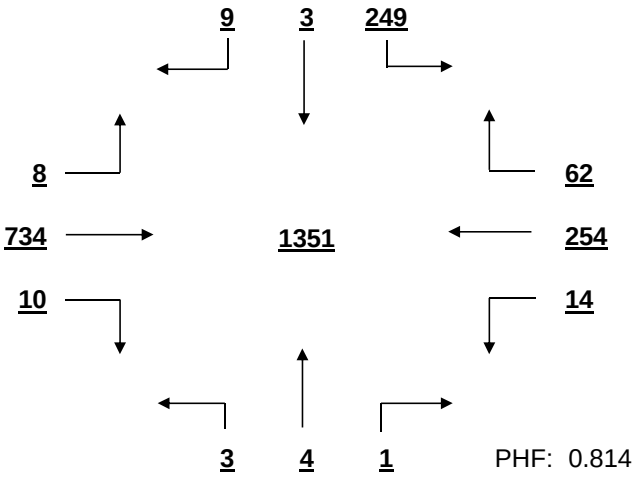

PHF: 0.814

PM PEAK HOUR VOLUME (14:15-23:45)
FROM 17:00 TO 18:00

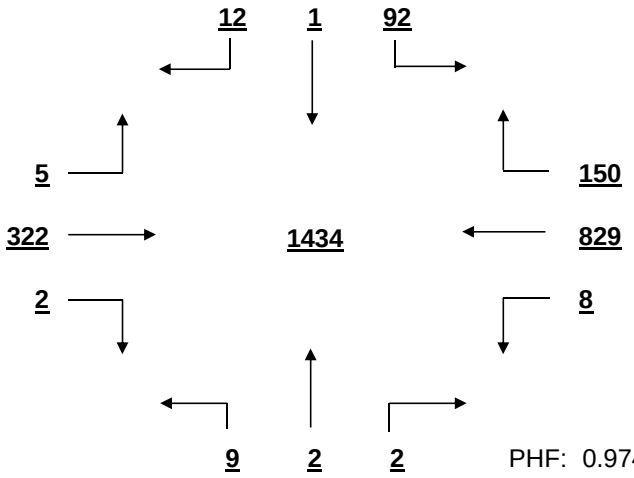

PHF: 0.974

MID-DAY PEAK HOUR VOLUME (11:00-14:00)
FROM 12:30 TO 13:30

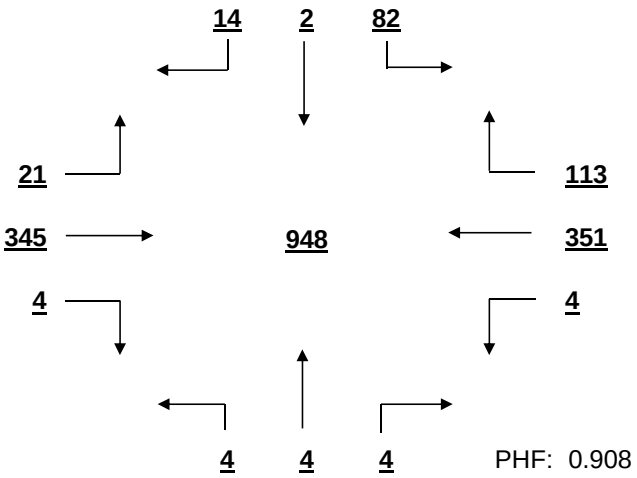

PHF: 0.908

OTHER HOUR VOLUME
FROM 7:00 TO 8:00

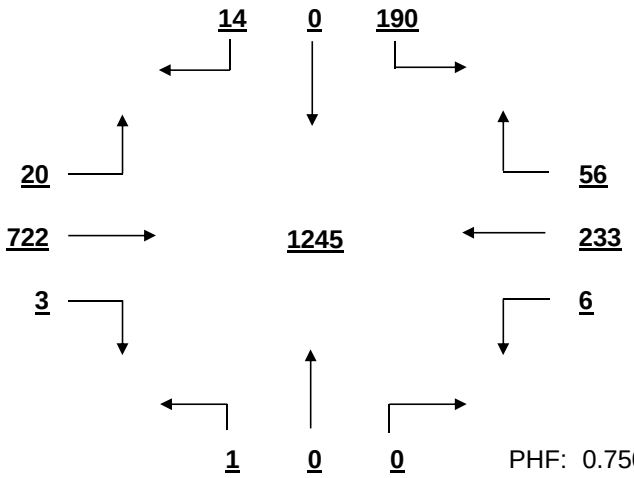

PHF: 0.750

SIGNAL WARRANT ANALYSIS

Bush River Rd AT Ashland Rd-Marydale Ln Date: 11/29/2016

Minor Street Volume, percent of total = 12.6%
Percent of Left Turns from Minor Street = = 80.1%
Percent of Right Turns from Minor Street = 13.1%
Percent of Minor Street Right Turns to Remove from Warrant Analysis = 0%
WARRANT BASIS = **100%**

Warrant No. 1 - Vehicular Volume is not met

Condition A - Minimum Vehicular Volume is not met

Average Major Street % of Warrant				Average Minor Street % of Warrant			
828.8	/ 500	=	166%	108.6	/ 150	=	72%

Hourly percent of warrant

	7:00 - 8:00	8:00 - 9:00	9:00 - 10:00	10:00 - 11:00	11:00 - 12:00	12:00 - 13:00	13:00 - 14:00	14:00 - 15:00	15:00 - 16:00	16:00 - 17:00	17:00 - 18:00	18:00 - 19:00
Major St.	208%	180%	109%	114%	131%	161%	156%	136%	147%	191%	263%	194%
Minor St.	136%	124%	53%	69%	47%	56%	70%	64%	53%	74%	70%	54%

Condition B - Interruption to Continuous Traffic is not met

Average Major Street % of Warrant				Average Minor Street % of Warrant			
828.8	/ 750	=	111%	108.6	/ 75	=	145%

Hourly percent of warrant

	7:00 - 8:00	8:00 - 9:00	9:00 - 10:00	10:00 - 11:00	11:00 - 12:00	12:00 - 13:00	13:00 - 14:00	14:00 - 15:00	15:00 - 16:00	16:00 - 17:00	17:00 - 18:00	18:00 - 19:00
Major St.	139%	120%	73%	76%	87%	107%	104%	91%	98%	127%	175%	129%
Minor St.	272%	248%	105%	137%	93%	112%	140%	128%	105%	148%	140%	108%

80% Combination of Conditions A & B is not met

Warrant No. 2 - Four Hour Vehicular Volume is met

Hourly percent of warrant

	7:00 - 8:00	8:00 - 9:00	9:00 - 10:00	10:00 - 11:00	11:00 - 12:00	12:00 - 13:00	13:00 - 14:00	14:00 - 15:00	15:00 - 16:00	16:00 - 17:00	17:00 - 18:00	18:00 - 19:00
Minor St.	224%	152%	33%	45%	35%	57%	67%	51%	47%	102%	131%	77%

Warrant No. 3 - Peak Hour is met

Overall Peak Hour: 17:00 - 18:00 — Percent of warrant — Minor St. 85%

Higher Volume Side Street Peak Hour: 7:30 - 8:30 — Percent of warrant — Minor St. 146%

Warrant No. 4 - Pedestrian Volume. Pedestrian volume shown are minumum volumes assuming heavy major street traffic. If these volumes are met, warrant 4 requires further engineering analysis

S

Minimum 4 hour ped. volume crossing major street: 107

Minimum peak hour ped. volume crossing major street: 133

Number of pedestrians crossing major street

	7:00 - 8:00	8:00 - 9:00	9:00 - 10:00	10:00 - 11:00	11:00 - 12:00	12:00 - 13:00	13:00 - 14:00	14:00 - 15:00	15:00 - 16:00	16:00 - 17:00	17:00 - 18:00	18:00 - 19:00
Major t.	0	0	0	0	0	0	0	0	0	0	0	0

Warrant No. 7 - Crash Experience (Requires 3 criteria analysis by engineering)

Total Number: 0 From: 1/1/2005 to 1/1/2008

Accident Rate: 0.00 per million entering vehicles

Types of Accidents	No.	/	Avg.		No.	/	Avg.
Right Angle	0	/	0.0	Rear End	0	/	0.0
Lost Control	0	/	0.0	Side Swipe	0	/	0.0
Left Turn	0	/	0.0	Other	0	/	0.0

SOUTH CAROLINA DEPARTMENT OF TRANSPORTATION
DISTRICT 1
TRAFFIC ENGINEERING

County: Richland City: Columbia Date: 11/28/2016

Major Rt: Bush River Rd * Not on State System Minor Rt: Outlet Pointe Blvd-Meadow Ct

Day of Week: Monday Weather: Clear Office: Short Counts JMS

Type of Control: Signal Speed Limit (major st) 40

Direction of Minor Street: N-S Intersection ADT - 24460 (Calc)

Number of Lanes (major st)* 2 Number of Lanes (minor st)* 2

* Each Direction

INTERSECTION VOLUME SUMMARY

	From N Outlet Pointe Blvd				From S Outlet Pointe Blvd				From E Bush River Rd				From W Bush River Rd				Total	Total
	LT	STR	RT	TOT	LT	STR	RT	TOT	LT	STR	RT	TOT	LT	STR	RT	TOT	Vol	Peds
7:00 - 7:15	10	1	1	12	1	0	2	3	21	46	6	73	1	141	1	143	231	0
7:15 - 7:30	19	1	1	21	2	0	0	2	55	87	5	147	1	236	8	245	415	0
7:30 - 7:45	21	2	4	27	2	0	5	7	56	87	4	147	1	273	8	282	463	0
7:45 - 8:00	22	0	3	25	1	0	4	5	87	75	10	172	0	287	9	296	498	0
8:00 - 8:15	16	0	3	19	4	1	3	8	100	107	5	212	1	188	12	201	440	1
8:15 - 8:30	11	1	0	12	2	0	17	19	113	117	4	234	0	185	10	195	460	0
8:30 - 8:45	14	1	0	15	4	0	8	12	77	89	6	172	0	171	12	183	382	2
8:45 - 9:00	16	0	1	17	2	0	10	12	62	78	4	144	1	149	5	155	328	1
9:00 - 9:15	7	2	0	9	3	0	18	21	59	76	1	136	0	114	7	121	287	2
9:15 - 9:30	8	1	2	11	4	0	16	20	48	88	1	137	1	90	8	99	267	0
9:30 - 9:45	5	0	1	6	9	2	17	28	30	85	3	118	1	73	10	84	236	0
9:45 - 10:00	8	1	0	9	8	0	20	28	35	91	3	129	0	75	8	83	249	2
10:00 - 10:15	8	0	1	9	6	1	23	30	34	87	5	126	0	70	11	81	246	0
10:15 - 10:30	7	0	1	8	7	0	21	28	33	90	3	126	2	76	6	84	246	0
10:30 - 10:45	6	0	1	7	6	0	26	32	32	96	3	131	1	67	5	73	243	0
10:45 - 11:00	5	0	0	5	6	0	27	33	41	83	7	131	1	76	11	88	257	2
11:00 - 11:15	2	1	1	4	10	0	32	42	40	101	4	145	0	89	6	95	286	0
11:15 - 11:30	8	0	0	8	10	0	30	40	56	88	2	146	0	86	7	93	287	1
11:30 - 11:45	4	0	0	4	8	0	50	58	61	123	4	188	0	85	6	91	341	1
11:45 - 12:00	8	0	2	10	7	2	54	63	66	136	6	208	1	96	11	108	389	0
12:00 - 12:15	6	1	1	8	30	1	88	119	66	132	10	208	1	99	24	124	459	0
12:15 - 12:30	5	1	3	9	15	2	56	73	57	140	9	206	0	106	17	123	411	2
12:30 - 12:45	7	1	1	9	21	5	68	94	82	164	6	252	0	122	17	139	494	2
12:45 - 13:00	5	0	1	6	18	0	53	71	92	150	4	246	0	104	11	115	438	2
13:00 - 13:15	9	1	1	11	28	2	86	116	77	146	8	231	3	123	16	142	500	1
13:15 - 13:30	6	2	2	10	17	1	54	72	82	131	10	223	0	119	22	141	446	1
13:30 - 13:45	7	0	0	7	17	0	51	68	67	116	7	190	0	109	24	133	398	0
13:45 - 14:00	4	1	0	5	12	1	32	45	67	133	10	210	1	106	14	121	381	1
14:00 - 14:15	6	3	2	11	11	1	35	47	73	109	8	190	0	93	8	101	349	0
14:15 - 14:30	7	3	1	11	22	0	39	61	45	124	5	174	0	137	12	149	395	3
14:30 - 14:45	11	0	0	11	5	1	35	41	45	125	4	174	1	116	12	129	355	0
14:45 - 15:00	9	1	2	12	12	3	35	50	48	150	6	204	1	146	14	161	427	1
15:00 - 15:15	7	3	1	11	9	0	28	37	35	118	9	162	0	117	6	123	333	0
15:15 - 15:30	11	0	2	13	12	0	35	47	40	140	9	189	2	110	8	120	369	1
15:30 - 15:45	5	0	0	5	10	1	51	62	44	150	13	207	0	109	8	117	391	0
15:45 - 16:00	8	0	0	8	17	1	36	54	46	140	7	193	2	107	8	117	372	0
16:00 - 16:15	5	1	1	7	25	1	88	114	36	185	16	237	1	105	7	113	471	1
16:15 - 16:30	10	1	0	11	16	6	39	61	41	219	14	274	2	107	14	123	469	0
16:30 - 16:45	4	0	3	7	25	0	86	111	36	198	16	250	2	140	13	155	523	0
16:45 - 17:00	7	2	2	11	20	1	80	101	31	269	6	306	2	118	10	130	548	0
17:00 - 17:15	7	2	5	14	52	1	108	161	34	252	20	306	2	190	8	200	681	2
17:15 - 17:30	10	0	3	13	20	1	79	100	47	298	28	373	1	161	11	173	659	3
17:30 - 17:45	7	2	2	11	21	3	57	81	38	297	16	351	2	102	11	115	558	0
17:45 - 18:00	16	1	2	19	15	1	32	48	27	261	20	308	3	112	9	124	499	0
18:00 - 18:15	3	0	2	5	14	0	20	34	27	220	13	260	3	101	9	113	412	1
18:15 - 18:30	7	0	4	11	15	0	15	30	27	185	18	230	1	86	7	94	365	0
18:30 - 18:45	7	2	2	11	12	1	20	33	25	135	9	169	0	83	7	90	303	0
18:45 - 19:00	13	0	0	13	9	1	21	31	24	101	9	134	0	77	6	83	261	0
TOTAL	414	39	65	518	602	41	1810	2453	2465	6618	396	9479	42	5832	494	6368	18818	33
Trucks	4	0	0	4	3	1	10	14	19	84	3	106	0	54	2	56	180	1.0%
School Buses	1	0	0	1	0	0	1	1	1	21	4	26	2	5	0	7	35	0.2%

TOTAL AND PEAK HOUR VOLUME DIAGRAMS

Bush River Rd AT Outlet Pointe Blvd-Meadow Ct Date: 11/28/2016

12.0 HOUR TOTAL VOLUME
FROM 7:00 TO 15:00

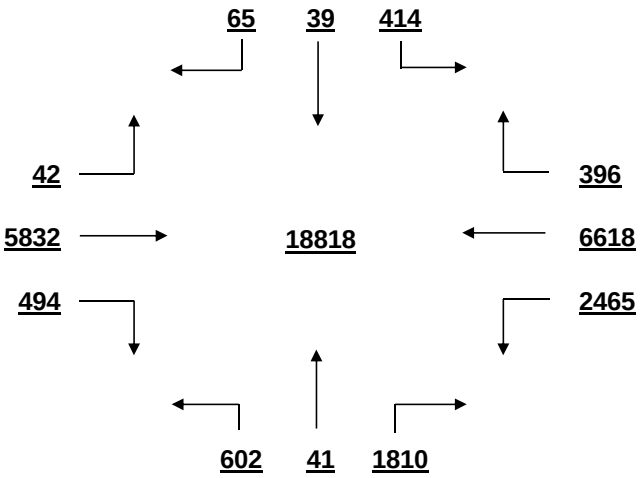

OVERALL PEAK HOUR VOLUME
FROM 16:45 TO 17:45

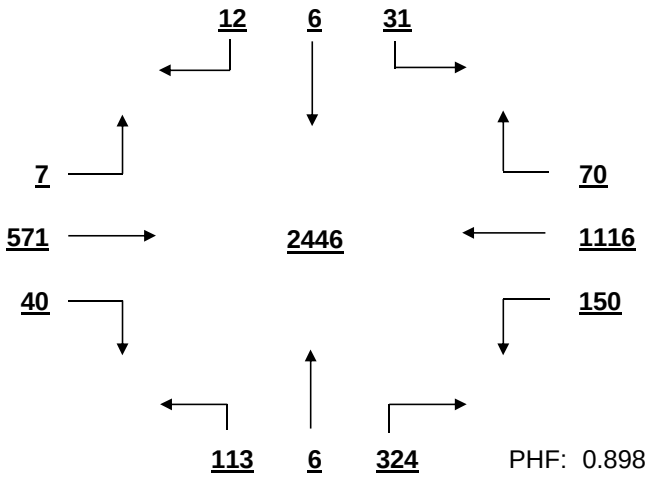

PHF: 0.898

AM PEAK HOUR VOLUME (0:00-10:45)
FROM 7:30 TO 8:30

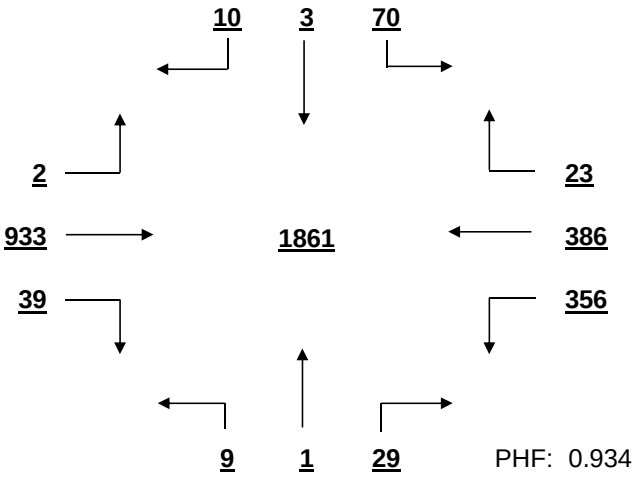

PHF: 0.934

PM PEAK HOUR VOLUME (14:15-23:45)
FROM 16:45 TO 17:45

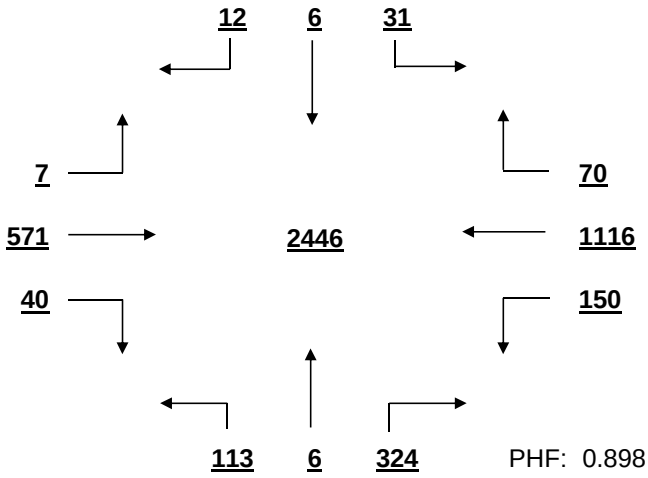

PHF: 0.898

MID-DAY PEAK HOUR VOLUME (11:00-14:00)
FROM 12:30 TO 13:30

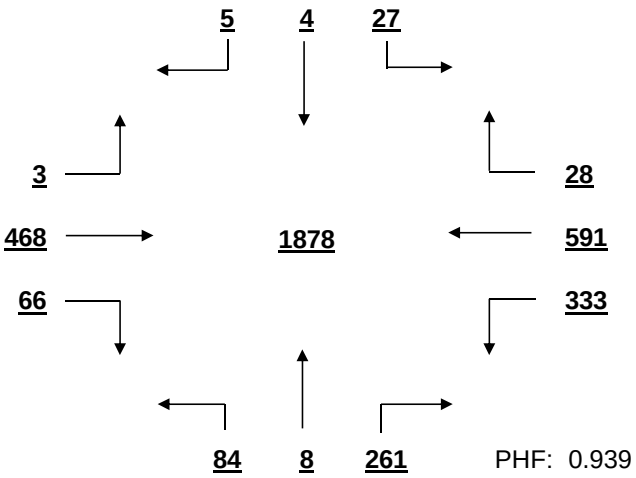

PHF: 0.939

OTHER HOUR VOLUME
FROM 7:00 TO 8:00

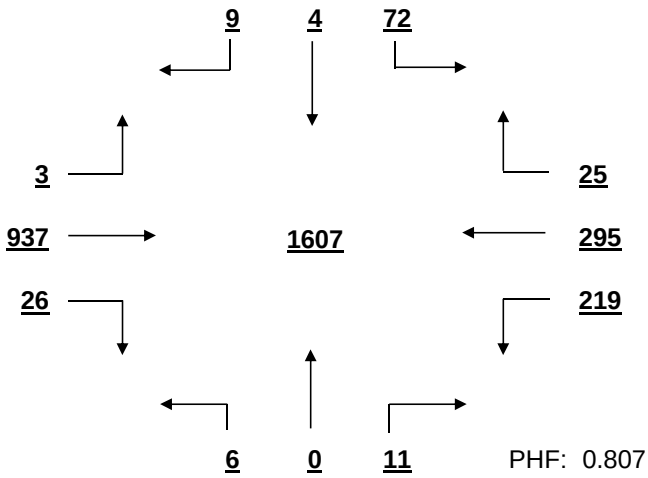

PHF: 0.807

SIGNAL WARRANT ANALYSIS

Bush River Rd AT Outlet Pointe Blvd-Meadow Ct Date: 11/28/2016

Minor Street Volume, percent of total = 15.8%
Percent of Left Turns from Minor Street = 34.2%
Percent of Right Turns from Minor Street = 63.1%
Percent of Minor Street Right Turns to Remove from Warrant Analysis = 0%
WARRANT BASIS = **100%**

Warrant No. 1 - Vehicular Volume is met

Condition A - Minimum Vehicular Volume is not met

Average Major Street % of Warrant	Average Minor Street % of Warrant
1320.6 / 600 = 220%	204.4 / 200 = 102%

Hourly percent of warrant

	7:00 - 8:00	8:00 - 9:00	9:00 - 10:00	10:00 - 11:00	11:00 - 12:00	12:00 - 13:00	13:00 - 14:00	14:00 - 15:00	15:00 - 16:00	16:00 - 17:00	17:00 - 18:00	18:00 - 19:00
Major St.	251%	249%	151%	140%	179%	236%	232%	214%	205%	265%	325%	196%
Minor St.	43%	32%	49%	62%	102%	179%	151%	100%	100%	194%	195%	64%

Condition B - Interruption to Continuous Traffic is met

Average Major Street % of Warrant	Average Minor Street % of Warrant
1320.6 / 900 = 147%	204.4 / 100 = 204%

Hourly percent of warrant

	7:00 - 8:00	8:00 - 9:00	9:00 - 10:00	10:00 - 11:00	11:00 - 12:00	12:00 - 13:00	13:00 - 14:00	14:00 - 15:00	15:00 - 16:00	16:00 - 17:00	17:00 - 18:00	18:00 - 19:00
Major St.	167%	166%	101%	93%	119%	157%	155%	142%	136%	176%	217%	130%
Minor St.	85%	63%	97%	123%	203%	357%	301%	199%	200%	387%	390%	128%

80% Combination of Conditions A & B is not met

Warrant No. 2 - Four Hour Vehicular Volume is met

Hourly percent of warrant

	7:00 - 8:00	8:00 - 9:00	9:00 - 10:00	10:00 - 11:00	11:00 - 12:00	12:00 - 13:00	13:00 - 14:00	14:00 - 15:00	15:00 - 16:00	16:00 - 17:00	17:00 - 18:00	18:00 - 19:00
Minor St.	74%	55%	42%	47%	120%	310%	262%	171%	157%	337%	339%	91%

Warrant No. 3 - Peak Hour is met

	Percent of warrant		Percent of warrant
Overall Peak Hour: 16:45 - 17:45		Higher Volume Side Street Peak Hour: 16:30 - 17:30	
Minor St.	295%	Minor St.	315%

Warrant No. 4 - Pedestrian Volume. Pedestrian volume shown are minumum volumes assuming heavy major street traffic. If these volumes are met, warrant 4 requires further engineering analysis

S

Minimum 4 hour ped. volume crossing major street: 107

Minimum peak hour ped. volume crossing major street: 133

Number of pedestrians crossing major street

	7:00 - 8:00	8:00 - 9:00	9:00 - 10:00	10:00 - 11:00	11:00 - 12:00	12:00 - 13:00	13:00 - 14:00	14:00 - 15:00	15:00 - 16:00	16:00 - 17:00	17:00 - 18:00	18:00 - 19:00
Major t.	0	1	2	2	0	4	3	3	1	1	4	0

Warrant No. 7 - Crash Experience (Requires 3 criteria analysis by engineering)

Total Number: 0 From: 1/1/2005 to 1/1/2008
Accident Rate: 0.00 per million entering vehicles

Types of Accidents	No.	/	Avg.		No.	/	Avg.
Right Angle	0	/	0.0	Rear End	0	/	0.0
Lost Control	0	/	0.0	Side Swipe	0	/	0.0
Left Turn	0	/	0.0	Other	0	/	0.0

SOUTH CAROLINA DEPARTMENT OF TRANSPORTATION
DISTRICT 1
TRAFFIC ENGINEERING

County: Richland City: Columbia Date: 11/30/2016

Major Rt: Bush River Rd * Not on State System Minor Rt: Berryhill Dr Clear

Day of Week: Wednesday Weather: Rain Office: Short Counts JMS

Type of Control: Signal Speed Limit (major st) 40

Direction of Minor Street: N-S Intersection ADT - 27690 (Calc)

Number of Lanes (major st)* 2 Number of Lanes (minor st)* 1

* Each Direction

INTERSECTION VOLUME SUMMARY

	From N Berryhill Dr				From S Berryhill Dr				From E Bush River Rd				From W Bush River Rd				Total	Total
	LT	STR	RT	TOT	LT	STR	RT	TOT	LT	STR	RT	TOT	LT	STR	RT	TOT	Vol	Peds
7:00 - 7:15	12	0	1	13	0	0	0	0	0	80	33	113	11	112	0	123	249	0
7:15 - 7:30	51	0	2	53	0	0	0	0	0	144	65	209	10	258	0	268	530	0
7:30 - 7:45	48	0	7	55	0	0	0	0	0	185	103	288	14	309	0	323	666	0
7:45 - 8:00	46	0	5	51	0	0	0	0	0	193	87	280	12	287	0	299	630	0
8:00 - 8:15	33	0	4	37	0	0	0	0	0	180	106	286	7	267	0	274	597	0
8:15 - 8:30	13	0	0	13	0	0	0	0	0	95	49	144	4	116	0	120	277	0
8:30 - 8:45	35	0	16	51	0	0	0	0	0	190	104	294	18	206	0	224	569	0
8:45 - 9:00	25	0	6	31	0	0	0	0	0	167	94	261	11	181	0	192	484	0
9:00 - 9:15	18	0	5	23	0	0	0	0	0	128	51	179	13	156	0	169	371	0
9:15 - 9:30	19	0	4	23	0	0	0	0	0	118	54	172	9	133	0	142	337	0
9:30 - 9:45	31	0	3	34	0	0	0	0	0	112	46	158	12	128	0	140	332	0
9:45 - 10:00	17	0	4	21	0	0	0	0	0	126	38	164	10	130	0	140	325	0
10:00 - 10:15	29	0	6	35	0	0	0	0	0	106	21	127	12	96	0	108	270	0
10:15 - 10:30	19	0	4	23	0	0	0	0	0	115	32	147	13	111	0	124	294	1
10:30 - 10:45	35	0	3	38	0	0	0	0	0	96	21	117	11	82	0	93	248	0
10:45 - 11:00	22	0	6	28	0	0	0	0	0	125	25	150	11	97	0	108	286	0
11:00 - 11:15	40	0	10	50	0	0	0	0	0	143	28	171	10	110	0	120	341	0
11:15 - 11:30	33	0	7	40	0	0	0	0	0	131	25	156	14	115	0	129	325	0
11:30 - 11:45	46	0	17	63	0	0	0	0	0	164	35	199	12	149	0	161	423	0
11:45 - 12:00	53	0	18	71	0	0	0	0	0	158	37	195	15	176	0	191	457	0
12:00 - 12:15	71	0	27	98	0	0	0	0	0	188	23	211	18	210	0	228	537	1
12:15 - 12:30	47	0	17	64	0	0	0	0	0	223	39	262	15	206	0	221	547	0
12:30 - 12:45	41	0	10	51	0	0	0	0	0	184	35	219	24	214	0	238	508	0
12:45 - 13:00	48	0	12	60	0	0	0	0	0	211	53	264	19	191	0	210	534	0
13:00 - 13:15	60	0	23	83	0	0	0	0	0	166	47	213	29	225	0	254	550	0
13:15 - 13:30	46	0	20	66	0	0	0	0	0	218	55	273	18	168	0	186	525	0
13:30 - 13:45	42	0	10	52	0	0	0	0	0	194	51	245	21	219	0	240	537	0
13:45 - 14:00	42	0	8	50	0	0	0	0	0	207	64	271	20	187	0	207	528	0
14:00 - 14:15	40	0	14	54	0	0	0	0	0	165	32	197	27	156	0	183	434	1
14:15 - 14:30	32	0	7	39	0	0	0	0	0	142	35	177	12	129	0	141	357	0
14:30 - 14:45	28	0	5	33	0	0	0	0	0	130	23	153	8	110	0	118	304	0
14:45 - 15:00	52	0	8	60	0	0	0	0	0	154	18	172	13	154	0	167	399	0
15:00 - 15:15	53	0	7	60	0	0	0	0	0	169	15	184	10	149	0	159	403	0
15:15 - 15:30	51	0	7	58	0	0	0	0	0	172	17	189	3	108	0	111	358	0
15:30 - 15:45	45	0	7	52	0	0	0	0	0	172	26	198	6	164	0	170	420	0
15:45 - 16:00	48	0	12	60	0	0	0	0	0	208	38	246	6	158	0	164	470	0
16:00 - 16:15	73	0	17	90	0	0	0	0	0	214	23	237	11	193	0	204	531	0
16:15 - 16:30	68	0	3	71	0	0	0	0	0	194	19	213	6	139	0	145	429	0
16:30 - 16:45	111	0	18	129	0	0	0	0	0	214	38	252	2	192	0	194	575	2
16:45 - 17:00	89	0	10	99	0	0	0	0	0	326	31	357	13	168	0	181	637	0
17:00 - 17:15	131	0	16	147	0	0	0	0	0	321	32	353	9	302	0	311	811	1
17:15 - 17:30	90	0	10	100	0	0	0	0	0	341	61	402	7	237	0	244	746	0
17:30 - 17:45	87	0	9	96	0	0	0	0	0	265	51	316	8	137	0	145	557	0
17:45 - 18:00	60	0	10	70	0	0	0	0	0	288	29	317	6	164	0	170	557	0
18:00 - 18:15	58	0	5	63	0	0	0	0	0	329	34	363	8	149	0	157	583	0
18:15 - 18:30	31	0	2	33	0	0	0	0	0	251	32	283	8	122	0	130	446	1
18:30 - 18:45	21	0	6	27	0	0	0	0	0	227	15	242	8	105	0	113	382	0
18:45 - 19:00	20	0	5	25	0	0	0	0	0	207	16	223	6	92	0	98	346	1
TOTAL	2210	0	433	2643	0	0	0	0	0	8836	2006	10842	570	7967	0	8537	22022	8
Trucks	8	0	2	10	0	0	0	0	0	61	13	74	2	56	0	58	142	0.6%
School Buses	2	0	5	7	0	0	0	0	0	17	1	18	2	6	0	8	33	0.1%

TOTAL AND PEAK HOUR VOLUME DIAGRAMS

Bush River Rd AT Berryhill Dr

Date: 11/30/2016

12.0 HOUR TOTAL VOLUME
FROM 7:00 TO 15:00

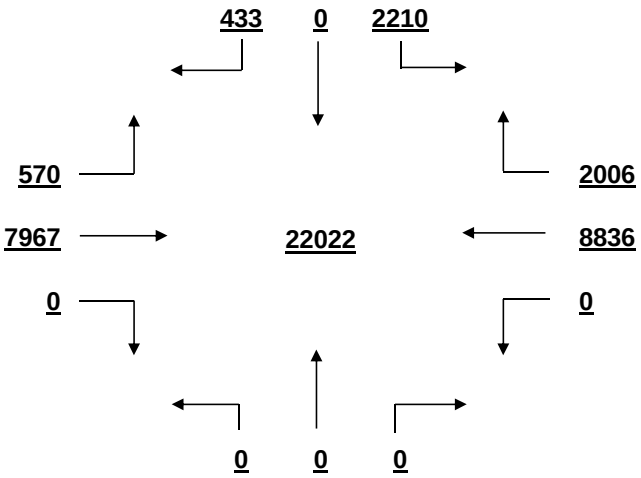

OVERALL PEAK HOUR VOLUME
FROM 16:30 TO 17:30

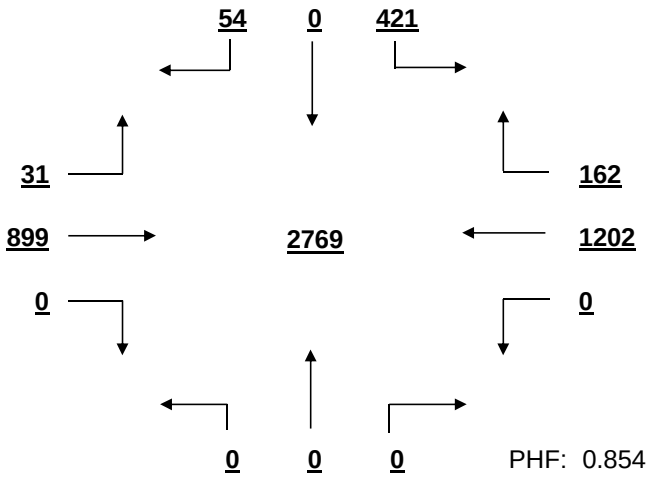

PHF: 0.854

AM PEAK HOUR VOLUME (0:00-10:45)
FROM 7:15 TO 8:15

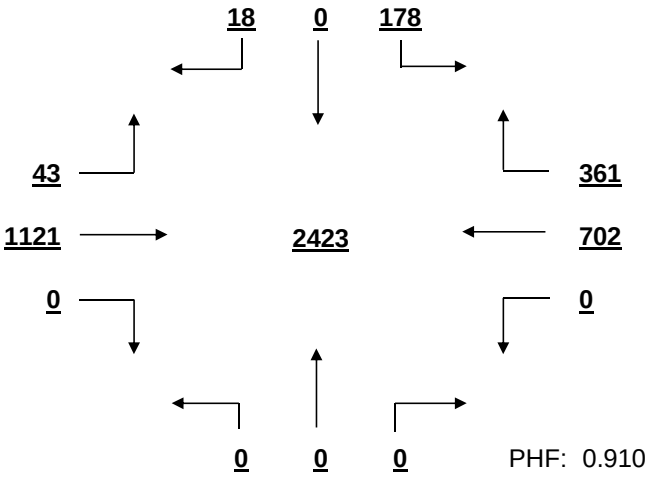

PHF: 0.910

PM PEAK HOUR VOLUME (14:15-23:45)
FROM 16:30 TO 17:30

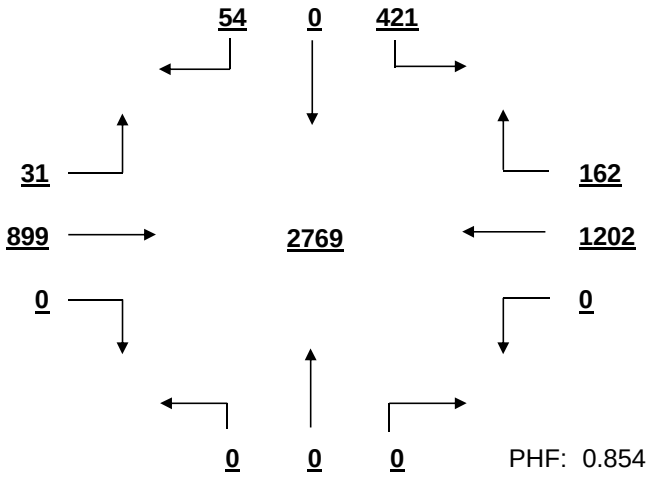

PHF: 0.854

MID-DAY PEAK HOUR VOLUME (11:00-14:00)
FROM 12:45 TO 13:45

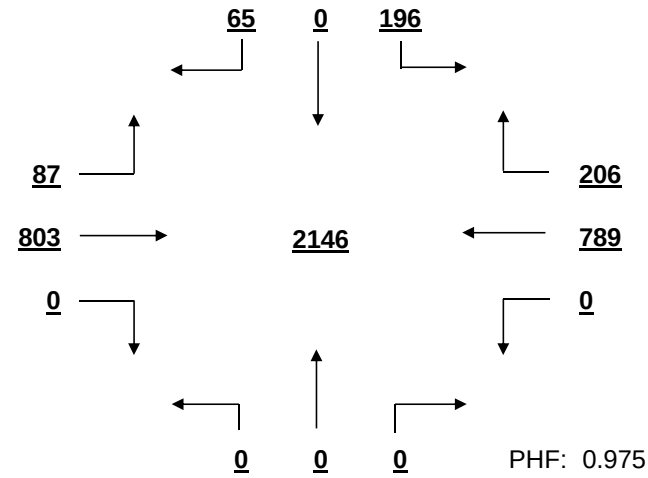

PHF: 0.975

OTHER HOUR VOLUME
FROM 7:00 TO 8:00

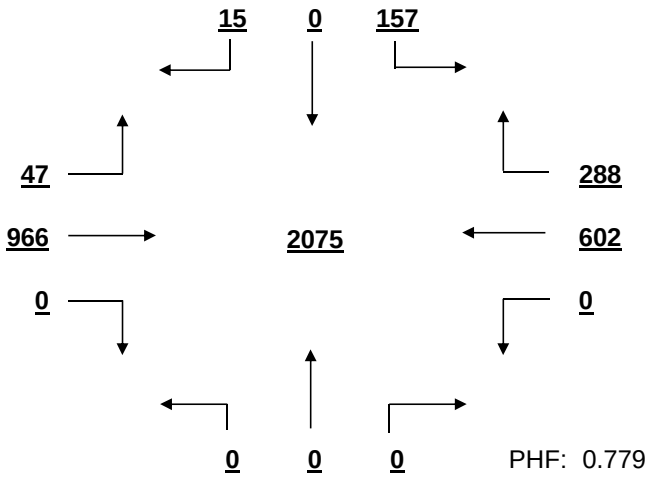

PHF: 0.779

SIGNAL WARRANT ANALYSIS

Bush River Rd AT Berryhill Dr Date: 11/30/2016

Minor Street Volume, percent of total = 12.0%
Percent of Left Turns from Minor Street = 83.6%
Percent of Right Turns from Minor Street = 16.4%
Percent of Minor Street Right Turns to Remove from Warrant Analysis = 0%
WARRANT BASIS = **100%**

Warrant No. 1 - Vehicular Volume is met

Condition A - Minimum Vehicular Volume is met

Average Major Street % of Warrant	Average Minor Street % of Warrant
1614.9 / 600 = 269%	220.3 / 150 = 147%

Hourly percent of warrant

	7:00 - 8:00	8:00 - 9:00	9:00 - 10:00	10:00 - 11:00	11:00 - 12:00	12:00 - 13:00	13:00 - 14:00	14:00 - 15:00	15:00 - 16:00	16:00 - 17:00	17:00 - 18:00	18:00 - 19:00
Major St.	317%	299%	211%	162%	220%	309%	315%	218%	237%	297%	376%	268%
Minor St.	115%	88%	67%	83%	149%	182%	167%	124%	153%	259%	275%	99%

Condition B - Interruption to Continuous Traffic is met

Average Major Street % of Warrant	Average Minor Street % of Warrant
1614.9 / 900 = 179%	220.3 / 75 = 294%

Hourly percent of warrant

	7:00 - 8:00	8:00 - 9:00	9:00 - 10:00	10:00 - 11:00	11:00 - 12:00	12:00 - 13:00	13:00 - 14:00	14:00 - 15:00	15:00 - 16:00	16:00 - 17:00	17:00 - 18:00	18:00 - 19:00
Major St.	211%	199%	140%	108%	147%	206%	210%	145%	158%	198%	251%	179%
Minor St.	229%	176%	135%	165%	299%	364%	335%	248%	307%	519%	551%	197%

80% Combination of Conditions A & B is met

Warrant No. 2 - Four Hour Vehicular Volume is met

Hourly percent of warrant

	7:00 - 8:00	8:00 - 9:00	9:00 - 10:00	10:00 - 11:00	11:00 - 12:00	12:00 - 13:00	13:00 - 14:00	14:00 - 15:00	15:00 - 16:00	16:00 - 17:00	17:00 - 18:00	18:00 - 19:00
Minor St.	215%	165%	106%	83%	249%	341%	314%	204%	288%	486%	516%	185%

Warrant No. 3 - Peak Hour is met

Overall Peak Hour: 16:30 - 17:30 — Percent of warrant
Minor St. 475%

Higher Volume Side Street Peak Hour: 16:30 - 17:30 — Percent of warrant
Minor St. 475%

Warrant No. 4 - Pedestrian Volume. Pedestrian volume shown are minumum volumes assuming heavy major street traffic. If these volumes are met, warrant 4 requires further engineering analysis

S

Minimum 4 hour ped. volume crossing major street: 107

Minimum peak hour ped. volume crossing major street: 133

Number of pedestrians crossing major street

	7:00 - 8:00	8:00 - 9:00	9:00 - 10:00	10:00 - 11:00	11:00 - 12:00	12:00 - 13:00	13:00 - 14:00	14:00 - 15:00	15:00 - 16:00	16:00 - 17:00	17:00 - 18:00	18:00 - 19:00
Major t.	0	0	0	0	0	0	0	1	0	0	0	0

Warrant No. 7 - Crash Experience (Requires 3 criteria analysis by engineering)

Total Number: 0 From: 1/1/2005 to 1/1/2008
Accident Rate: 0.00 per million entering vehicles

Types of Accidents	No.	/	Avg.		No.	/	Avg.
Right Angle	0	/	0.0	Rear End	0	/	0.0
Lost Control	0	/	0.0	Side Swipe	0	/	0.0
Left Turn	0	/	0.0	Other	0	/	0.0

SOUTH CAROLINA DEPARTMENT OF TRANSPORTATION
DISTRICT 1
TRAFFIC ENGINEERING

County: Richland City: Columbia Date: 11/29/2016

Major Rt: Bush River Rd * Not on State System Minor Rt: Rockland Rd Clear

Day of Week: Tuesday Weather: Rain Office: Short Counts JMS

Type of Control: Stop Sign Speed Limit (major st) 40

Direction of Minor Street: N-S Intersection ADT - 21150 (Calc)

Number of Lanes (major st)* 2 Number of Lanes (minor st)* 1

* Each Direction

INTERSECTION VOLUME SUMMARY

	From N Rockland Rd				From S Rockland Rd				From E Bush River Rd				From W Bush River Rd				Total	Total
	LT	STR	RT	TOT	LT	STR	RT	TOT	LT	STR	RT	TOT	LT	STR	RT	TOT	Vol	Peds
7:00 - 7:15	2	0	6	8	0	0	1	1	2	79	3	84	10	215	1	226	319	1
7:15 - 7:30	3	0	6	9	0	0	1	1	0	96	2	98	8	321	0	329	437	0
7:30 - 7:45	3	0	14	17	1	0	0	1	2	120	3	125	7	343	1	351	494	5
7:45 - 8:00	2	0	13	15	0	0	1	1	2	117	6	125	5	355	0	360	501	0
8:00 - 8:15	3	0	13	16	0	0	1	1	1	125	3	129	1	361	1	363	509	0
8:15 - 8:30	2	0	0	2	0	0	1	1	2	117	0	119	8	361	4	373	495	0
8:30 - 8:45	5	0	7	12	1	0	2	3	3	115	5	123	8	248	1	257	395	1
8:45 - 9:00	1	0	9	10	1	0	1	2	4	99	0	103	8	181	8	197	312	0
9:00 - 9:15	3	0	8	11	1	0	0	1	6	95	3	104	10	143	11	164	280	1
9:15 - 9:30	0	0	3	3	3	0	1	4	5	94	5	104	3	111	9	123	234	1
9:30 - 9:45	3	0	5	8	6	0	2	8	9	71	5	85	6	113	15	134	235	1
9:45 - 10:00	2	0	5	7	6	0	4	10	6	85	6	97	7	116	13	136	250	2
10:00 - 10:15	3	0	4	7	0	0	0	0	10	82	2	94	1	101	13	115	216	0
10:15 - 10:30	0	0	1	1	7	0	7	14	7	76	1	84	3	104	17	124	223	0
10:30 - 10:45	1	0	2	3	10	1	8	19	13	77	3	93	3	87	24	114	229	0
10:45 - 11:00	2	0	5	7	11	0	6	17	18	94	3	115	3	107	19	129	268	0
11:00 - 11:15	0	0	7	7	10	0	17	27	12	113	1	126	6	99	26	131	291	0
11:15 - 11:30	3	0	2	5	14	1	12	27	11	103	2	116	2	115	21	138	286	0
11:30 - 11:45	2	0	10	12	12	1	12	25	16	125	2	143	2	127	18	147	327	0
11:45 - 12:00	2	0	7	9	11	0	14	25	11	129	0	140	4	141	20	165	339	2
12:00 - 12:15	2	0	9	11	18	0	16	34	15	133	4	152	3	180	20	203	400	0
12:15 - 12:30	2	0	6	8	22	0	12	34	9	175	4	188	10	170	24	204	434	0
12:30 - 12:45	3	0	5	8	25	0	12	37	16	181	5	202	1	158	23	182	429	0
12:45 - 13:00	1	0	7	8	17	0	13	30	8	164	1	173	5	150	25	180	391	0
13:00 - 13:15	2	0	5	7	16	0	12	28	11	155	2	168	3	144	26	173	376	1
13:15 - 13:30	2	0	6	8	18	0	16	34	16	158	3	177	2	142	29	173	392	1
13:30 - 13:45	3	0	8	11	17	0	13	30	15	170	6	191	7	138	21	166	398	0
13:45 - 14:00	3	1	7	11	24	0	17	41	14	166	4	184	5	131	14	150	386	1
14:00 - 14:15	3	0	3	6	21	0	15	36	7	128	3	138	6	124	23	153	333	2
14:15 - 14:30	0	1	1	2	19	0	8	27	14	147	6	167	1	119	0	120	316	0
14:30 - 14:45	7	0	4	11	19	1	20	40	9	145	6	160	4	112	15	131	342	0
14:45 - 15:00	5	0	2	7	17	0	11	28	8	129	3	140	5	123	13	141	316	0
15:00 - 15:15	5	0	12	17	21	0	9	30	9	154	11	174	7	139	13	159	380	0
15:15 - 15:30	6	0	6	12	18	0	14	32	10	152	2	164	8	121	9	138	346	0
15:30 - 15:45	3	0	8	11	14	1	16	31	5	137	2	144	6	113	4	123	309	0
15:45 - 16:00	3	1	10	14	11	0	5	16	3	145	11	159	3	107	15	125	314	3
16:00 - 16:15	8	0	10	18	10	0	9	19	7	203	4	214	8	125	9	142	393	0
16:15 - 16:30	2	0	4	6	8	0	11	19	7	252	9	268	9	140	2	151	444	0
16:30 - 16:45	2	0	16	18	7	1	8	16	5	274	8	287	14	148	6	168	489	0
16:45 - 17:00	0	0	6	6	5	1	8	14	6	325	4	335	12	138	7	157	512	0
17:00 - 17:15	3	0	15	18	5	0	12	17	4	319	7	330	9	181	9	199	564	0
17:15 - 17:30	1	0	13	14	1	0	9	10	5	289	2	296	5	150	9	164	484	0
17:30 - 17:45	3	0	10	13	2	0	9	11	1	348	7	356	1	164	7	172	552	1
17:45 - 18:00	5	0	9	14	8	0	8	16	9	317	9	335	8	133	9	150	515	0
18:00 - 18:15	2	0	7	9	8	0	11	19	2	249	8	259	5	131	10	146	433	0
18:15 - 18:30	2	0	7	9	7	0	10	17	3	237	10	250	13	98	6	117	393	0
18:30 - 18:45	5	0	6	11	7	0	4	11	2	195	9	206	5	70	9	84	312	0
18:45 - 19:00	2	0	4	6	8	0	6	14	4	154	14	172	6	80	3	89	281	0
TOTAL	127	3	333	463	467	7	405	879	364	7613	219	8196	276	7478	582	8336	17874	23
Trucks	1	0	8	9	0	0	0	0	0	134	1	135	8	134	1	143	287	1.6%
School Buses	0	0	0	0	1	0	0	1	0	24	0	24	0	11	1	12	37	0.2%

TOTAL AND PEAK HOUR VOLUME DIAGRAMS

Bush River Rd AT Rockland Rd Date: 11/29/2016

12.0 HOUR TOTAL VOLUME
FROM 7:00 TO 15:00

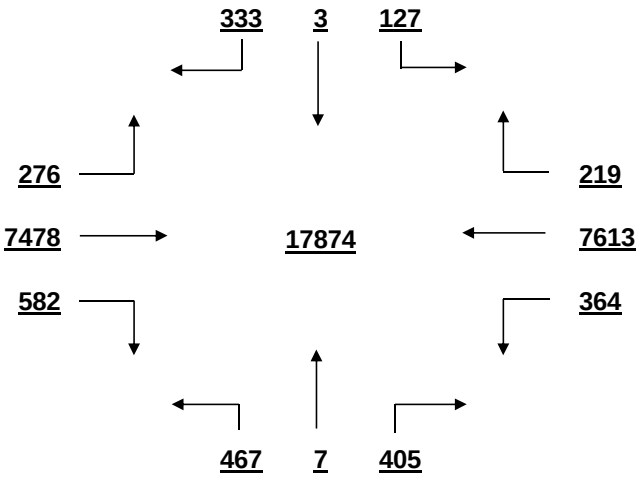

OVERALL PEAK HOUR VOLUME
FROM 17:00 TO 18:00

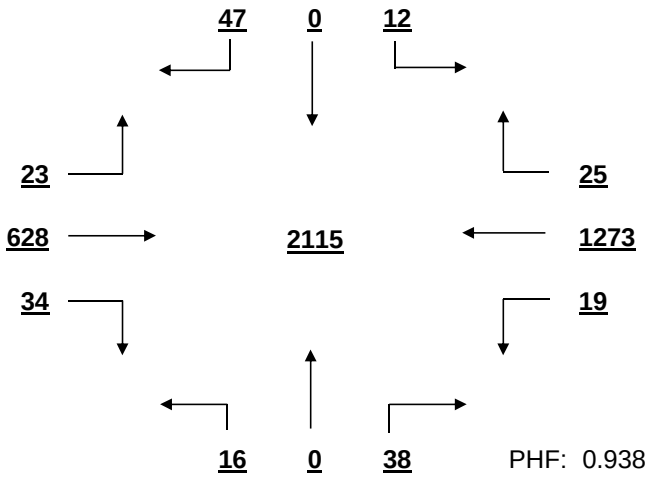

PHF: 0.938

AM PEAK HOUR VOLUME (0:00-10:45)
FROM 7:30 TO 8:30

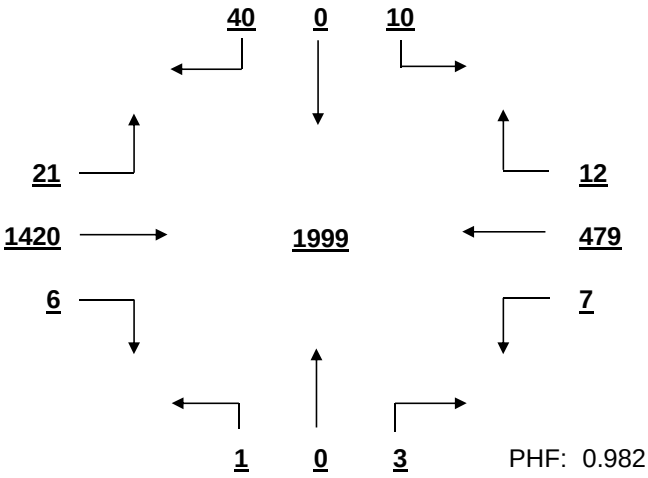

PHF: 0.982

PM PEAK HOUR VOLUME (14:15-23:45)
FROM 17:00 TO 18:00

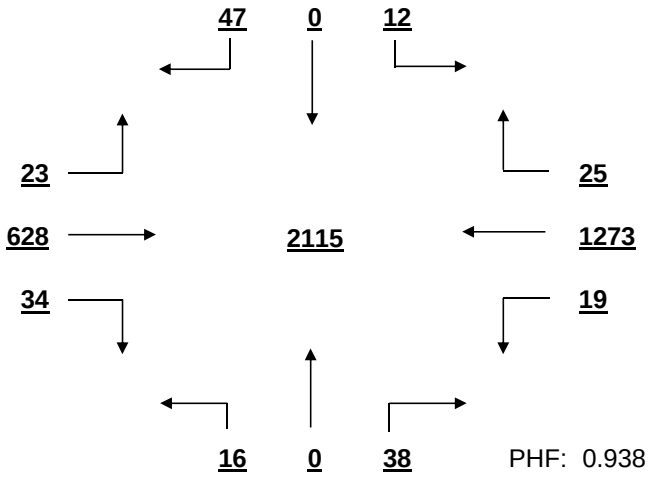

PHF: 0.938

MID-DAY PEAK HOUR VOLUME (11:00-14:00)
FROM 12:00 TO 13:00

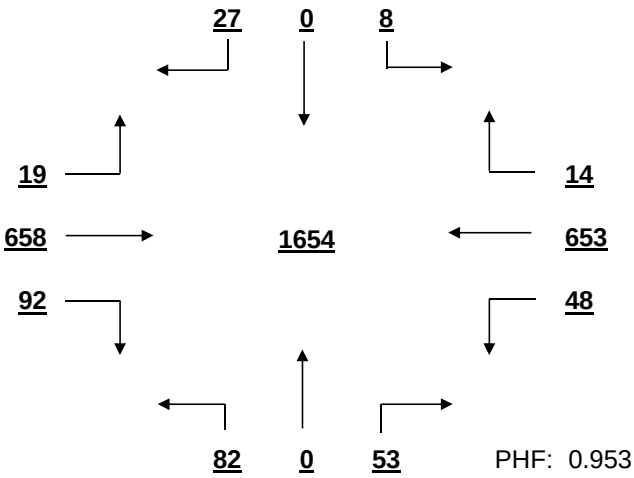

PHF: 0.953

OTHER HOUR VOLUME
FROM 7:00 TO 8:00

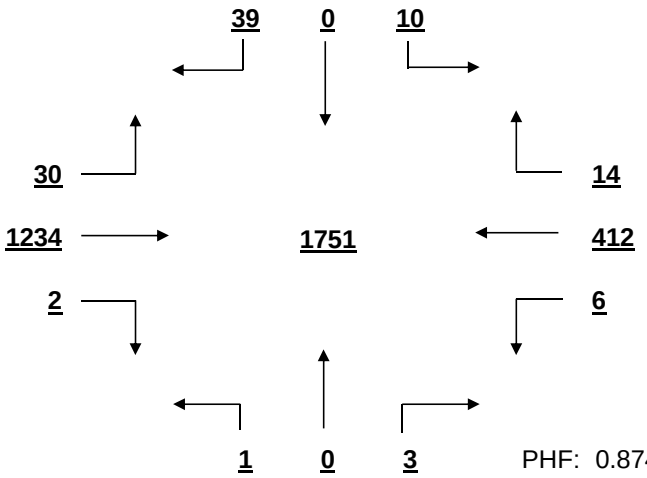

PHF: 0.874

SIGNAL WARRANT ANALYSIS

Bush River Rd AT Rockland Rd Date: 11/29/2016

Minor Street Volume, percent of total = 7.5%
Percent of Left Turns from Minor Street = 44.3%
Percent of Right Turns from Minor Street = 55.0%
Percent of Minor Street Right Turns to Remove from Warrant Analysis = 0%
WARRANT BASIS = **100%**

Warrant No. 1 - Vehicular Volume is not met

Condition A - Minimum Vehicular Volume is not met

Average Major Street % of Warrant				Average Minor Street % of Warrant			
1377.7	/ 600 =	230%		73.3	/ 150 =	49%	

Hourly percent of warrant

	7:00 - 8:00	8:00 - 9:00	9:00 - 10:00	10:00 - 11:00	11:00 - 12:00	12:00 - 13:00	13:00 - 14:00	14:00 - 15:00	15:00 - 16:00	16:00 - 17:00	17:00 - 18:00	18:00 - 19:00
Major St.	283%	277%	158%	145%	184%	247%	230%	192%	198%	287%	334%	221%
Minor St.	33%	27%	19%	33%	69%	90%	89%	87%	73%	45%	39%	41%

Condition B - Interruption to Continuous Traffic is not met

Average Major Street % of Warrant				Average Minor Street % of Warrant			
1377.7	/ 900 =	153%		73.3	/ 75 =	98%	

Hourly percent of warrant

	7:00 - 8:00	8:00 - 9:00	9:00 - 10:00	10:00 - 11:00	11:00 - 12:00	12:00 - 13:00	13:00 - 14:00	14:00 - 15:00	15:00 - 16:00	16:00 - 17:00	17:00 - 18:00	18:00 - 19:00
Major St.	189%	185%	105%	96%	123%	165%	154%	128%	132%	191%	222%	147%
Minor St.	65%	53%	39%	67%	139%	180%	177%	175%	145%	91%	79%	81%

80% Combination of Conditions A & B is not met

Warrant No. 2 - Four Hour Vehicular Volume is met

Hourly percent of warrant

	7:00 - 8:00	8:00 - 9:00	9:00 - 10:00	10:00 - 11:00	11:00 - 12:00	12:00 - 13:00	13:00 - 14:00	14:00 - 15:00	15:00 - 16:00	16:00 - 17:00	17:00 - 18:00	18:00 - 19:00
Minor St.	61%	50%	18%	28%	87%	169%	166%	117%	103%	85%	74%	68%

Warrant No. 3 - Peak Hour is not met

Overall Peak Hour: 17:00 - 18:00 — Percent of warrant — Minor St. 59%

Higher Volume Side Street Peak Hour: 13:45 - 14:45 — Percent of warrant — Minor St. 67%

Warrant No. 4 - Pedestrian Volume. Pedestrian volume shown are minumum volumes assuming heavy major street traffic. If these volumes are met, warrant 4 requires further engineering analysis

S

Minimum 4 hour ped. volume crossing major street: 107

Minimum peak hour ped. volume crossing major street: 133

Number of pedestrians crossing major street

	7:00 - 8:00	8:00 - 9:00	9:00 - 10:00	10:00 - 11:00	11:00 - 12:00	12:00 - 13:00	13:00 - 14:00	14:00 - 15:00	15:00 - 16:00	16:00 - 17:00	17:00 - 18:00	18:00 - 19:00
Major t.	3	1	5	0	0	0	3	1	3	0	1	0

Warrant No. 7 - Crash Experience (Requires 3 criteria analysis by engineering)

Total Number: 0 From: 1/1/2005 to 1/1/2008

Accident Rate: 0.00 per million entering vehicles

Types of Accidents	No.	/	Avg.		No.	/	Avg.
Right Angle	0	/	0.0	Rear End	0	/	0.0
Lost Control	0	/	0.0	Side Swipe	0	/	0.0
Left Turn	0	/	0.0	Other	0	/	0.0

SOUTH CAROLINA DEPARTMENT OF TRANSPORTATION
DISTRICT 1
TRAFFIC ENGINEERING

County: Richland City: Columbia Date: 11/30/2016

Major Rt: Bush River Rd * Not on State System Minor Rt: Independence Ave-Fuddruckers Clear

Day of Week: Wednesday Weather: Rain Office: Short Counts JMS

Type of Control: Signal Speed Limit (major st) 40

Direction of Minor Street: N-S Intersection ADT - 21420 (Calc)

Number of Lanes (major st)* 2 Number of Lanes (minor st)* 1

* Each Direction

INTERSECTION VOLUME SUMMARY

	From N Independence Ave-F				From S Independence Ave-F				From E Bush River Rd				From W Bush River Rd				Total	Total
	LT	STR	RT	TOT	LT	STR	RT	TOT	LT	STR	RT	TOT	LT	STR	RT	TOT	Vol	Peds
7:00 - 7:15	0	0	1	1	5	0	1	6	4	58	0	62	0	213	8	221	290	1
7:15 - 7:30	0	0	0	0	2	0	3	5	1	99	0	100	0	299	0	299	404	0
7:30 - 7:45	2	0	0	2	1	0	0	1	1	161	2	164	0	345	10	355	522	1
7:45 - 8:00	0	0	0	0	4	0	5	9	2	146	0	148	0	354	9	363	520	0
8:00 - 8:15	1	0	0	1	1	0	6	7	3	135	1	139	0	359	4	363	510	1
8:15 - 8:30	0	0	0	0	5	0	4	9	1	142	0	143	0	337	0	337	489	0
8:30 - 8:45	0	0	0	0	2	0	2	4	2	130	0	132	0	287	2	289	425	3
8:45 - 9:00	0	0	0	0	4	0	1	5	3	106	1	110	0	196	3	199	314	1
9:00 - 9:15	0	0	0	0	5	0	2	7	4	90	2	96	1	174	2	177	280	0
9:15 - 9:30	1	0	0	1	2	0	3	5	6	100	0	106	0	130	5	135	247	0
9:30 - 9:45	0	0	0	0	0	0	3	3	2	97	0	99	0	124	7	131	233	1
9:45 - 10:00	0	0	0	0	4	0	4	8	0	80	0	80	0	131	3	134	222	3
10:00 - 10:15	0	0	0	0	0	0	0	0	3	87	1	91	0	98	4	102	193	0
10:15 - 10:30	1	0	1	2	2	0	1	3	2	112	1	115	0	119	0	119	239	1
10:30 - 10:45	0	0	0	0	1	0	1	2	1	97	1	99	0	108	1	109	210	1
10:45 - 11:00	0	0	0	0	4	0	1	5	2	104	3	109	0	119	4	123	237	1
11:00 - 11:15	0	0	0	0	4	0	2	6	3	143	0	146	1	117	5	123	275	1
11:15 - 11:30	1	0	0	1	5	0	6	11	2	133	4	139	0	131	0	131	282	1
11:30 - 11:45	1	0	0	1	6	0	2	8	3	155	4	162	0	128	4	132	303	0
11:45 - 12:00	0	0	0	0	6	0	2	8	1	123	1	125	0	147	3	150	283	1
12:00 - 12:15	2	0	1	3	5	0	2	7	4	158	5	167	1	210	6	217	394	0
12:15 - 12:30	4	0	1	5	2	0	5	7	5	189	5	199	2	189	7	198	409	0
12:30 - 12:45	1	0	0	1	5	0	2	7	2	170	3	175	0	170	8	178	361	0
12:45 - 13:00	4	0	1	5	7	0	3	10	2	181	3	186	2	188	4	194	395	1
13:00 - 13:15	1	0	0	1	3	0	3	6	1	164	7	172	3	202	2	207	386	1
13:15 - 13:30	1	0	1	2	3	0	6	9	5	175	3	183	0	170	5	175	369	4
13:30 - 13:45	2	0	1	3	1	0	2	3	3	155	2	160	1	171	4	176	342	2
13:45 - 14:00	3	0	3	6	1	0	1	2	11	174	4	189	0	174	6	180	377	1
14:00 - 14:15	0	0	1	1	3	0	1	4	1	158	3	162	0	128	7	135	302	0
14:15 - 14:30	0	0	2	2	1	0	6	7	2	181	0	183	1	125	0	126	318	3
14:30 - 14:45	1	0	0	1	4	0	2	6	1	152	1	154	0	152	5	157	318	0
14:45 - 15:00	1	0	0	1	5	0	2	7	2	154	1	157	0	138	6	144	309	0
15:00 - 15:15	0	0	0	0	4	0	2	6	0	148	1	149	0	121	3	124	279	0
15:15 - 15:30	1	0	0	1	4	0	1	5	3	157	1	161	0	149	5	154	321	0
15:30 - 15:45	0	0	0	0	9	0	2	11	2	161	1	164	0	139	8	147	322	1
15:45 - 16:00	1	0	0	1	2	0	3	5	5	164	3	172	0	128	5	133	311	0
16:00 - 16:15	1	0	0	1	13	0	7	20	2	197	0	199	0	146	5	151	371	1
16:15 - 16:30	0	0	1	1	6	0	3	9	4	238	3	245	2	137	9	148	403	0
16:30 - 16:45	2	0	0	2	4	0	7	11	10	267	0	277	0	171	7	178	468	1
16:45 - 17:00	2	0	0	2	5	0	7	12	7	294	2	303	1	165	2	168	485	1
17:00 - 17:15	3	0	0	3	12	1	9	22	8	321	4	333	0	214	2	216	574	1
17:15 - 17:30	0	1	0	1	5	0	6	11	2	326	0	328	0	201	2	203	543	5
17:30 - 17:45	0	0	3	3	11	0	6	17	8	333	2	343	2	166	1	169	532	0
17:45 - 18:00	1	0	0	1	9	0	3	12	5	309	2	316	0	157	7	164	493	2
18:00 - 18:15	2	0	0	2	4	1	3	8	3	285	3	291	1	149	6	156	457	6
18:15 - 18:30	0	0	0	0	3	0	3	6	3	256	2	261	0	138	1	139	406	0
18:30 - 18:45	4	0	0	4	3	0	1	4	3	203	0	206	0	117	4	121	335	0
18:45 - 19:00	1	0	0	1	0	0	0	0	1	183	1	185	0	114	1	115	301	0
TOTAL	45	1	17	63	197	2	147	346	151	8151	83	8385	18	8345	202	8565	17359	47
Trucks	0	0	0	0	19	0	28	47	54	72	0	126	0	56	51	107	280	1.6%
School Buses	0	0	0	0	0	0	0	0	2	24	0	26	0	11	0	11	37	0.2%

TOTAL AND PEAK HOUR VOLUME DIAGRAMS

Bush River Rd AT Independence Ave-Fuddruckers Date: 11/30/2016

12.0 HOUR TOTAL VOLUME
FROM 7:00 TO 15:00

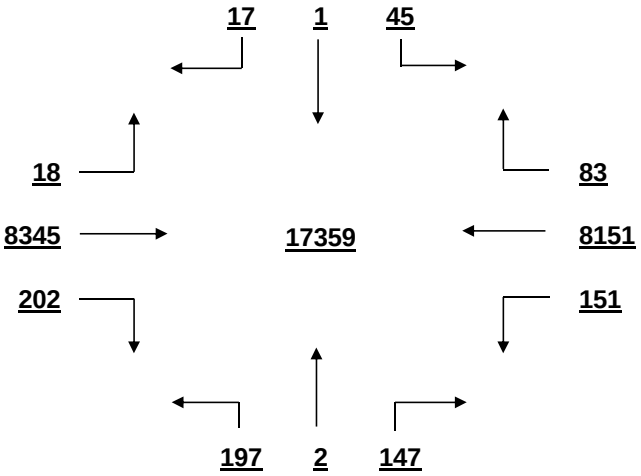

OVERALL PEAK HOUR VOLUME
FROM 17:00 TO 18:00

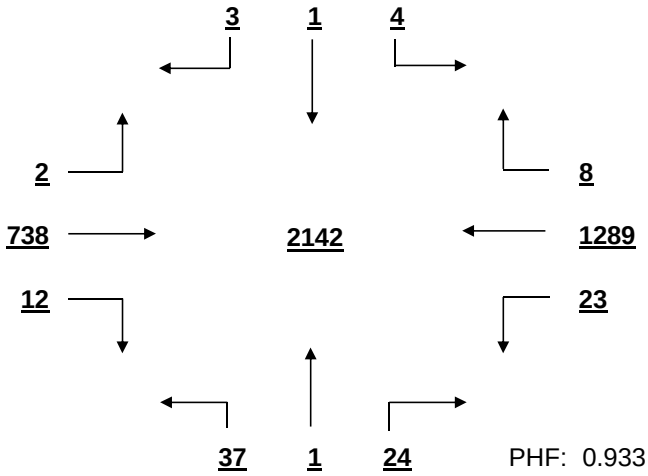

PHF: 0.933

AM PEAK HOUR VOLUME (0:00-10:45)
FROM 7:30 TO 8:30

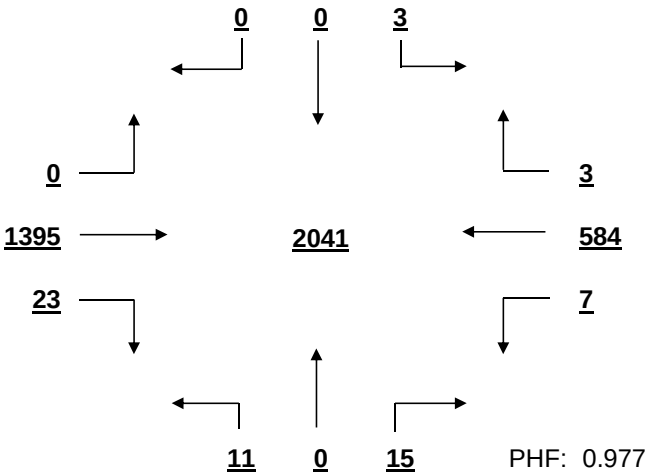

PHF: 0.977

PM PEAK HOUR VOLUME (14:15-23:45)
FROM 17:00 TO 18:00

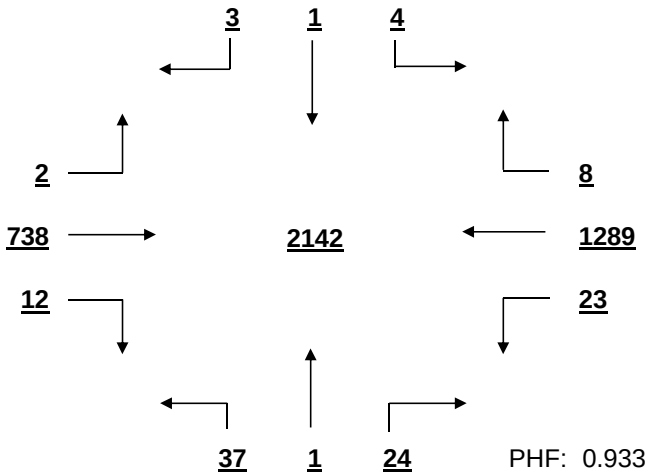

PHF: 0.933

MID-DAY PEAK HOUR VOLUME (11:00-14:00)
FROM 12:00 TO 13:00

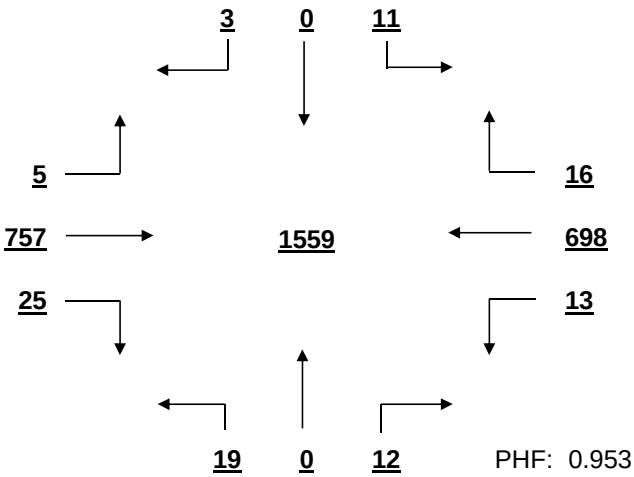

PHF: 0.953

OTHER HOUR VOLUME
FROM 7:00 TO 8:00

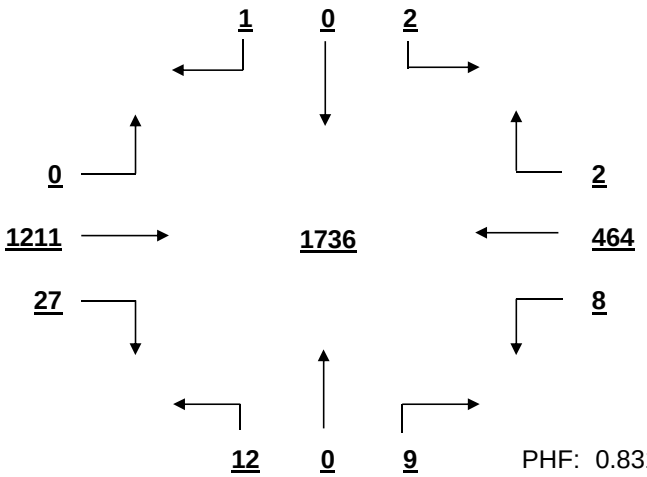

PHF: 0.831

SIGNAL WARRANT ANALYSIS

Bush River Rd AT Independence Ave-Fuddruckers Date: 11/30/2016

Minor Street Volume, percent of total = 2.4%
Percent of Left Turns from Minor Street = 59.2%
Percent of Right Turns from Minor Street = 40.1%
Percent of Minor Street Right Turns to Remove from Warrant Analysis = 0%
WARRANT BASIS = **100%**

Warrant No. 1 - Vehicular Volume is not met

Condition A - Minimum Vehicular Volume is not met

Average Major Street % of Warrant				Average Minor Street % of Warrant			
1412.5	/ 600 =	235%		28.8	/ 150 =	19%	

Hourly percent of warrant

	7:00 - 8:00	8:00 - 9:00	9:00 - 10:00	10:00 - 11:00	11:00 - 12:00	12:00 - 13:00	13:00 - 14:00	14:00 - 15:00	15:00 - 16:00	16:00 - 17:00	17:00 - 18:00	18:00 - 19:00
Major St.	285%	285%	160%	145%	185%	252%	240%	203%	201%	278%	345%	246%
Minor St.	14%	17%	15%	7%	22%	21%	13%	16%	18%	35%	41%	12%

Condition B - Interruption to Continuous Traffic is not met

Average Major Street % of Warrant				Average Minor Street % of Warrant			
1412.5	/ 900 =	157%		28.8	/ 75 =	38%	

Hourly percent of warrant

	7:00 - 8:00	8:00 - 9:00	9:00 - 10:00	10:00 - 11:00	11:00 - 12:00	12:00 - 13:00	13:00 - 14:00	14:00 - 15:00	15:00 - 16:00	16:00 - 17:00	17:00 - 18:00	18:00 - 19:00
Major St.	190%	190%	106%	96%	123%	168%	160%	135%	134%	185%	230%	164%
Minor St.	28%	33%	31%	13%	44%	41%	27%	32%	36%	69%	83%	24%

80% Combination of Conditions A & B is not met

Warrant No. 2 - Four Hour Vehicular Volume is not met

Hourly percent of warrant

	7:00 - 8:00	8:00 - 9:00	9:00 - 10:00	10:00 - 11:00	11:00 - 12:00	12:00 - 13:00	13:00 - 14:00	14:00 - 15:00	15:00 - 16:00	16:00 - 17:00	17:00 - 18:00	18:00 - 19:00
Minor St.	26%	31%	15%	6%	28%	39%	25%	24%	26%	65%	78%	23%

Warrant No. 3 - Peak Hour is not met

Percent of warrant
Overall Peak Hour: 17:00 - 18:00
Minor St. 62%

Percent of warrant
Higher Volume Side Street Peak Hour: 16:45 - 17:45
Minor St. 62%

Warrant No. 4 - Pedestrian Volume. Pedestrian volume shown are minumum volumes assuming heavy major street traffic. If these volumes are met, warrant 4 requires further engineering analysis

S

Minimum 4 hour ped. volume crossing major street: 107

Minimum peak hour ped. volume crossing major street: 133

Number of pedestrians crossing major street

	7:00 - 8:00	8:00 - 9:00	9:00 - 10:00	10:00 - 11:00	11:00 - 12:00	12:00 - 13:00	13:00 - 14:00	14:00 - 15:00	15:00 - 16:00	16:00 - 17:00	17:00 - 18:00	18:00 - 19:00
Major t.	2	5	4	3	3	1	8	3	1	3	4	6

Warrant No. 7 - Crash Experience (Requires 3 criteria analysis by engineering)

Total Number: 0 From: 1/1/2005 to 1/1/2008
Accident Rate: 0.00 per million entering vehicles

Types of Accidents	No.	/	Avg.		No.	/	Avg.
Right Angle	0	/	0.0	Rear End	0	/	0.0
Lost Control	0	/	0.0	Side Swipe	0	/	0.0
Left Turn	0	/	0.0	Other	0	/	0.0

SOUTH CAROLINA DEPARTMENT OF TRANSPORTATION
DISTRICT 1
TRAFFIC ENGINEERING

County: Richland City: Columbia Date: 11/29/2016

Major Rt: Bush River Rd * Not on State System Minor Rt: Zimalcrest-Walmart Clear

Day of Week: Tuesday Weather: Rain Office: Short Counts JMS

Type of Control: Signal Speed Limit (major st) 40

Direction of Minor Street: N-S Intersection ADT - 23410 (Calc)

Number of Lanes (major st)* 2 Number of Lanes (minor st)* 1

* Each Direction

INTERSECTION VOLUME SUMMARY

	From N Zimalcrest-Walmart				From S Zimalcrest-Walmart				From E Bush River Rd				From W Bush River Rd				Total	Total
	LT	STR	RT	TOT	LT	STR	RT	TOT	LT	STR	RT	TOT	LT	STR	RT	TOT	Vol	Peds
7:00 - 7:15	3	0	0	3	2	1	31	34	26	69	4	99	0	181	10	191	327	0
7:15 - 7:30	11	1	0	12	6	0	23	29	18	88	3	109	1	293	0	294	444	2
7:30 - 7:45	6	0	1	7	8	0	26	34	38	112	2	152	1	329	8	338	531	0
7:45 - 8:00	12	1	0	13	9	0	40	49	30	113	7	150	1	290	18	309	521	2
8:00 - 8:15	5	1	0	6	6	1	28	35	25	117	7	149	1	330	15	346	536	1
8:15 - 8:30	4	0	0	4	8	0	31	39	35	105	1	141	1	327	17	345	529	1
8:30 - 8:45	3	0	0	3	7	0	33	40	35	101	3	139	2	262	10	274	456	1
8:45 - 9:00	3	1	1	5	9	0	29	38	26	84	5	115	0	141	8	149	307	1
9:00 - 9:15	1	0	0	1	6	0	25	31	38	110	4	152	1	140	9	150	334	2
9:15 - 9:30	6	0	1	7	6	0	29	35	33	88	6	127	0	100	9	109	278	1
9:30 - 9:45	3	0	0	3	6	0	30	36	24	83	0	107	0	95	12	107	253	0
9:45 - 10:00	5	1	3	9	7	0	32	39	33	79	5	117	0	84	9	93	258	1
10:00 - 10:15	6	1	0	7	0	3	0	3	42	76	2	120	1	97	13	111	241	0
10:15 - 10:30	6	0	0	6	9	1	33	43	44	76	5	125	0	84	11	95	269	4
10:30 - 10:45	3	0	0	3	13	1	37	51	48	84	4	136	0	91	16	107	297	3
10:45 - 11:00	3	0	1	4	8	0	37	45	45	99	8	152	0	84	11	95	296	1
11:00 - 11:15	5	0	2	7	11	1	37	49	35	99	1	135	0	93	16	109	300	0
11:15 - 11:30	7	1	0	8	11	1	49	61	44	92	4	140	0	106	20	126	335	1
11:30 - 11:45	3	0	0	3	20	0	34	54	42	129	4	175	0	129	12	141	373	2
11:45 - 12:00	5	0	0	5	14	0	47	61	71	128	5	204	1	128	19	148	418	0
12:00 - 12:15	3	0	1	4	14	0	43	57	63	149	7	219	0	154	24	178	458	0
12:15 - 12:30	5	1	2	8	34	0	58	92	75	137	11	223	1	143	26	170	493	0
12:30 - 12:45	4	1	4	9	17	2	57	76	57	163	5	225	0	149	14	163	473	3
12:45 - 13:00	2	1	3	6	20	1	64	85	55	135	4	194	0	128	27	155	440	0
13:00 - 13:15	5	0	0	5	20	0	54	74	66	173	4	243	0	165	16	181	503	0
13:15 - 13:30	6	0	0	6	35	0	55	90	60	128	4	192	0	136	18	154	442	0
13:30 - 13:45	3	1	0	4	15	1	52	68	71	163	5	239	1	131	12	144	455	1
13:45 - 14:00	5	1	2	8	22	1	58	81	33	141	3	177	2	124	15	141	407	1
14:00 - 14:15	4	1	1	6	8	0	42	50	56	126	5	187	2	114	22	138	381	0
14:15 - 14:30	7	1	0	8	18	0	44	62	37	131	9	177	2	96	0	98	345	1
14:30 - 14:45	6	0	1	7	18	0	38	56	53	139	10	202	0	124	10	134	399	1
14:45 - 15:00	3	0	0	3	19	0	52	71	38	103	6	147	2	108	14	124	345	4
15:00 - 15:15	7	2	2	11	20	0	43	63	51	136	9	196	2	124	18	144	414	1
15:15 - 15:30	6	0	0	6	16	0	40	56	45	143	9	197	0	118	23	141	400	0
15:30 - 15:45	5	0	1	6	19	2	39	60	57	117	5	179	1	117	18	136	381	0
15:45 - 16:00	4	0	1	5	16	1	41	58	39	131	7	177	0	92	15	107	347	2
16:00 - 16:15	3	0	0	3	16	2	49	67	48	178	10	236	0	109	13	122	428	0
16:15 - 16:30	6	0	0	6	21	1	48	70	55	209	6	270	0	120	16	136	482	0
16:30 - 16:45	8	1	5	14	19	0	51	70	55	230	3	288	1	143	19	163	535	1
16:45 - 17:00	4	0	3	7	34	1	41	76	48	275	5	328	0	103	16	119	530	0
17:00 - 17:15	4	0	1	5	23	0	45	68	44	275	2	321	1	170	18	189	583	0
17:15 - 17:30	5	0	1	6	18	1	46	65	48	317	8	373	1	130	21	152	596	0
17:30 - 17:45	5	1	0	6	27	0	44	71	68	313	6	387	1	137	20	158	622	3
17:45 - 18:00	3	1	1	5	20	4	56	80	46	261	13	320	0	117	18	135	540	0
18:00 - 18:15	5	1	1	7	24	2	53	79	38	243	5	286	3	106	12	121	493	0
18:15 - 18:30	7	0	2	9	24	1	50	75	45	231	9	285	3	96	12	111	480	1
18:30 - 18:45	2	1	2	5	17	3	35	55	61	192	6	259	1	59	10	70	389	0
18:45 - 19:00	2	1	2	5	18	2	39	59	52	132	3	187	0	74	9	83	334	1
TOTAL	229	22	45	296	738	34	1968	2740	2196	7003	259	9458	34	6771	699	7504	19998	43
Trucks	2	0	3	5	9	0	30	39	18	138	7	163	2	109	7	118	325	1.6%
School Buses	0	0	0	0	0	0	0	0	0	16	0	16	0	4	0	4	20	0.1%

TOTAL AND PEAK HOUR VOLUME DIAGRAMS

Bush River Rd AT Zimalcrest-Walmart Date: 11/29/2016

12.0 HOUR TOTAL VOLUME
FROM 7:00 TO 15:00

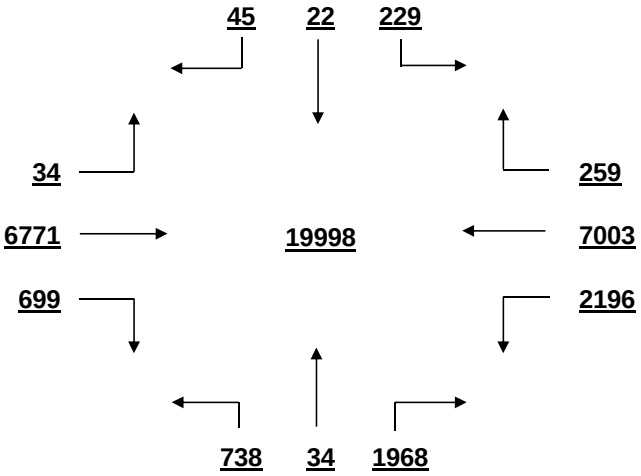

OVERALL PEAK HOUR VOLUME
FROM 17:00 TO 18:00

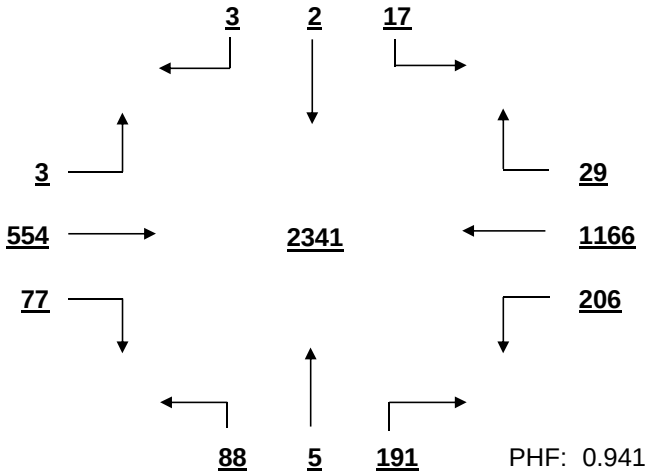

PHF: 0.941

AM PEAK HOUR VOLUME (0:00-10:45)
FROM 7:30 TO 8:30

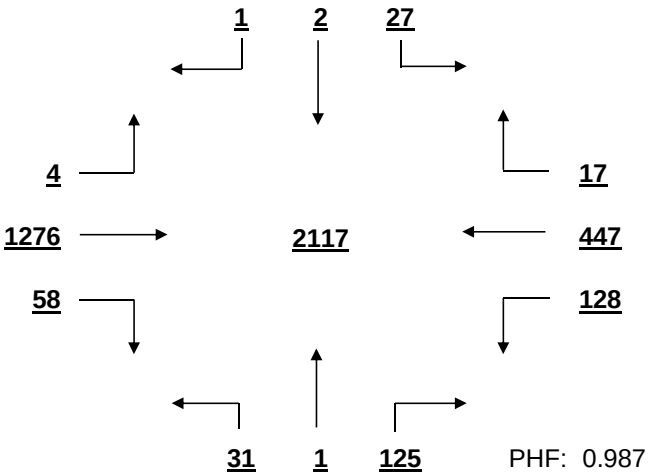

PHF: 0.987

PM PEAK HOUR VOLUME (14:15-23:45)
FROM 17:00 TO 18:00

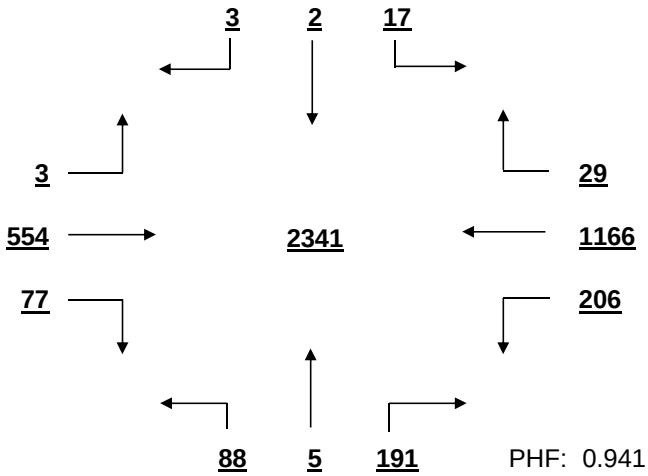

PHF: 0.941

MID-DAY PEAK HOUR VOLUME (11:00-14:00)
FROM 12:15 TO 13:15

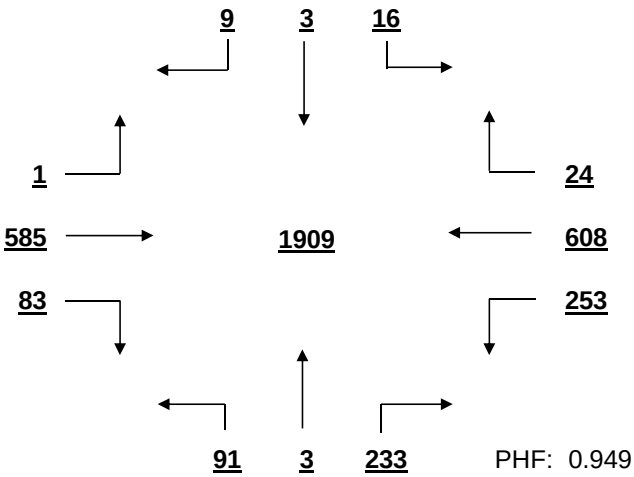

PHF: 0.949

OTHER HOUR VOLUME
FROM 7:00 TO 8:00

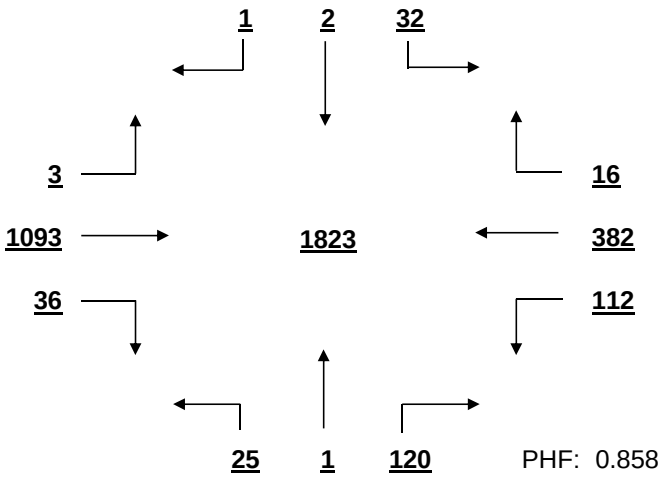

PHF: 0.858

SIGNAL WARRANT ANALYSIS

Bush River Rd AT Zimalcrest-Walmart Date: 11/29/2016

Minor Street Volume, percent of total = 15.2%
Percent of Left Turns from Minor Street = 31.9%
Percent of Right Turns from Minor Street = 66.3%
Percent of Minor Street Right Turns to Remove from Warrant Analysis = 0%
WARRANT BASIS = **100%**

Warrant No. 1 - Vehicular Volume is met

Condition A - Minimum Vehicular Volume is met

Average Major Street % of Warrant				Average Minor Street % of Warrant			
1413.5	/ 600	=	236%	228.3	/ 150	=	152%

Hourly percent of warrant

	7:00 - 8:00	8:00 - 9:00	9:00 - 10:00	10:00 - 11:00	11:00 - 12:00	12:00 - 13:00	13:00 - 14:00	14:00 - 15:00	15:00 - 16:00	16:00 - 17:00	17:00 - 18:00	18:00 - 19:00
Major St.	274%	276%	160%	157%	196%	255%	245%	201%	213%	277%	339%	234%
Minor St.	97%	101%	94%	95%	150%	207%	209%	159%	158%	189%	189%	179%

Condition B - Interruption to Continuous Traffic is met

Average Major Street % of Warrant				Average Minor Street % of Warrant			
1413.5	/ 900	=	157%	228.3	/ 75	=	304%

Hourly percent of warrant

	7:00 - 8:00	8:00 - 9:00	9:00 - 10:00	10:00 - 11:00	11:00 - 12:00	12:00 - 13:00	13:00 - 14:00	14:00 - 15:00	15:00 - 16:00	16:00 - 17:00	17:00 - 18:00	18:00 - 19:00
Major St.	182%	184%	107%	105%	131%	170%	163%	134%	142%	185%	226%	156%
Minor St.	195%	203%	188%	189%	300%	413%	417%	319%	316%	377%	379%	357%

80% Combination of Conditions A & B is met

Warrant No. 2 - Four Hour Vehicular Volume is met

Hourly percent of warrant

	7:00 - 8:00	8:00 - 9:00	9:00 - 10:00	10:00 - 11:00	11:00 - 12:00	12:00 - 13:00	13:00 - 14:00	14:00 - 15:00	15:00 - 16:00	16:00 - 17:00	17:00 - 18:00	18:00 - 19:00
Minor St.	183%	190%	92%	89%	210%	388%	391%	233%	252%	354%	355%	335%

Warrant No. 3 - Peak Hour is met

Overall Peak Hour: 17:00 - 18:00 — Percent of warrant — Minor St. 284%

Higher Volume Side Street Peak Hour: 12:15 - 13:15 — Percent of warrant — Minor St. 256%

Warrant No. 4 - Pedestrian Volume. Pedestrian volume shown are minumum volumes assuming heavy major street traffic. If these volumes are met, warrant 4 requires further engineering analysis

S

Minimum 4 hour ped. volume crossing major street: 107

Minimum peak hour ped. volume crossing major street: 133

Number of pedestrians crossing major street

	7:00 - 8:00	8:00 - 9:00	9:00 - 10:00	10:00 - 11:00	11:00 - 12:00	12:00 - 13:00	13:00 - 14:00	14:00 - 15:00	15:00 - 16:00	16:00 - 17:00	17:00 - 18:00	18:00 - 19:00
Major t.	2	4	2	4	1	3	1	5	2	0	2	2

Warrant No. 7 - Crash Experience (Requires 3 criteria analysis by engineering)

Total Number: 0 From: 1/1/2005 to 1/1/2008

Accident Rate: 0.00 per million entering vehicles

Types of Accidents	No.	/	Avg.		No.	/	Avg.
Right Angle	0	/	0.0	Rear End	0	/	0.0
Lost Control	0	/	0.0	Side Swipe	0	/	0.0
Left Turn	0	/	0.0	Other	0	/	0.0

SOUTH CAROLINA DEPARTMENT OF TRANSPORTATION
DISTRICT 1
TRAFFIC ENGINEERING

County: Richland City: Columbia Date: 12/1/2016

Major Rt: Morning Hill Dr * Not on State System Minor Rt: Burnette Dr Clear

Day of Week: Thursday Weather: Clear Office: Short Counts JMS

Type of Control: Stop Sign Speed Limit (major st) 35

Direction of Minor Street: E-W Intersection ADT - 10850 (Calc)

Number of Lanes (major st)* 1 Number of Lanes (minor st)* 1

* Each Direction

INTERSECTION VOLUME SUMMARY

	From N Morning Hill Dr				From S Morning Hill Dr				From E Burnette Dr				From W Burnette Dr				Total	Total
	LT	STR	RT	TOT	LT	STR	RT	TOT	LT	STR	RT	TOT	LT	STR	RT	TOT	Vol	Peds
7:00 - 7:15	0	7	3	10	46	3	0	49	0	0	0	0	0	0	46	46	105	1
7:15 - 7:30	0	11	6	17	53	2	0	55	0	0	0	0	4	0	0	4	76	0
7:30 - 7:45	0	14	5	19	55	5	0	60	0	0	0	0	6	0	123	129	208	0
7:45 - 8:00	0	17	4	21	84	5	0	89	0	0	0	0	2	0	124	126	236	0
8:00 - 8:15	0	17	4	21	88	4	0	92	0	0	0	0	1	0	107	108	221	0
8:15 - 8:30	0	11	0	11	85	7	0	92	0	0	0	0	3	0	115	118	221	1
8:30 - 8:45	0	5	6	11	65	2	0	67	0	0	0	0	4	0	98	102	180	0
8:45 - 9:00	0	8	9	17	52	3	0	55	0	0	0	0	2	0	66	68	140	0
9:00 - 9:15	0	4	4	8	44	1	0	45	0	0	0	0	1	0	47	48	101	0
9:15 - 9:30	0	6	3	9	41	4	0	45	0	0	0	0	2	0	33	35	89	0
9:30 - 9:45	0	7	4	11	50	4	0	54	0	0	0	0	0	0	40	40	105	0
9:45 - 10:00	0	3	2	5	42	5	0	47	0	0	0	0	0	0	43	43	95	0
10:00 - 10:15	0	8	1	9	0	4	0	4	0	0	0	0	5	0	28	33	46	0
10:15 - 10:30	0	9	3	12	38	5	0	43	0	0	0	0	2	0	43	45	100	0
10:30 - 10:45	0	6	4	10	37	7	0	44	0	0	0	0	2	0	34	36	90	0
10:45 - 11:00	0	1	5	6	34	2	0	36	0	0	0	0	3	0	44	47	89	0
11:00 - 11:15	0	7	2	9	35	6	0	41	0	0	0	0	3	0	39	42	92	0
11:15 - 11:30	0	3	0	3	47	4	0	51	0	0	0	0	1	0	45	46	100	0
11:30 - 11:45	0	7	2	9	45	5	0	50	0	0	0	0	4	0	57	61	120	1
11:45 - 12:00	0	7	3	10	59	8	0	67	0	0	0	0	4	0	63	67	144	0
12:00 - 12:15	0	5	3	8	67	11	0	78	0	0	0	0	4	0	73	77	163	0
12:15 - 12:30	0	2	2	4	62	8	0	70	0	0	0	0	4	0	71	75	149	0
12:30 - 12:45	0	5	5	10	61	7	0	68	0	0	0	0	6	0	81	87	165	0
12:45 - 13:00	0	8	7	15	73	6	0	79	0	0	0	0	2	0	70	72	166	0
13:00 - 13:15	0	7	9	16	67	7	0	74	0	0	0	0	2	0	56	58	148	0
13:15 - 13:30	0	5	6	11	62	5	0	67	0	0	0	0	3	0	58	61	139	0
13:30 - 13:45	0	5	6	11	61	9	0	70	0	0	0	0	0	0	66	66	147	1
13:45 - 14:00	0	6	3	9	60	6	0	66	0	0	0	0	3	0	47	50	125	1
14:00 - 14:15	0	4	6	10	54	4	0	58	0	0	0	0	4	0	62	66	134	0
14:15 - 14:30	0	6	5	11	76	10	0	86	0	0	0	0	3	0	0	3	100	1
14:30 - 14:45	0	9	5	14	60	7	0	67	0	0	0	0	6	0	46	52	133	1
14:45 - 15:00	0	8	7	15	54	9	0	63	0	0	0	0	3	0	71	74	152	0
15:00 - 15:15	0	5	6	11	63	7	0	70	0	0	0	0	2	0	62	64	145	1
15:15 - 15:30	0	0	0	0	73	9	0	82	0	0	0	0	6	0	58	64	146	1
15:30 - 15:45	0	4	4	8	84	5	0	89	0	0	0	0	4	0	57	61	158	0
15:45 - 16:00	0	6	7	13	87	5	0	92	0	0	0	0	5	0	56	61	166	0
16:00 - 16:15	0	7	7	14	75	9	0	84	0	0	0	0	3	0	77	80	178	0
16:15 - 16:30	0	9	8	17	99	6	0	105	0	0	0	0	4	0	65	69	191	0
16:30 - 16:45	0	13	18	31	137	6	0	143	0	0	0	0	1	0	99	100	274	0
16:45 - 17:00	0	7	13	20	139	6	0	145	0	0	0	0	4	0	70	74	239	1
17:00 - 17:15	0	4	12	16	130	9	0	139	0	0	0	0	0	0	100	100	255	0
17:15 - 17:30	0	27	34	61	144	7	0	151	0	0	0	0	4	0	47	51	263	0
17:30 - 17:45	0	28	36	64	157	9	0	166	0	0	0	0	3	0	83	86	316	0
17:45 - 18:00	0	7	27	34	154	4	0	158	0	0	0	0	2	0	57	59	251	0
18:00 - 18:15	0	11	23	34	123	4	0	127	0	0	0	0	4	0	50	54	215	0
18:15 - 18:30	0	0	10	10	110	6	0	116	0	0	0	0	1	0	45	46	172	1
18:30 - 18:45	0	5	9	14	90	14	0	104	0	0	0	0	4	0	41	45	163	0
18:45 - 19:00	0	7	4	11	72	9	0	81	0	0	0	0	3	0	34	37	129	0
TOTAL	0	368	352	720	3494	290	0	3784	0	0	0	0	139	0	2897	3036	7540	11
Trucks	0	2	1	3	16	1	0	17	0	0	0	0	2	0	14	16	36	0.5%
School Buses	0	3	0	3	14	0	0	14	0	0	0	0	0	0	23	23	40	0.5%

TOTAL AND PEAK HOUR VOLUME DIAGRAMS

Morning Hill Dr AT Burnette Dr Date: 12/1/2016

12.0 HOUR TOTAL VOLUME
FROM 7:00 TO 15:00

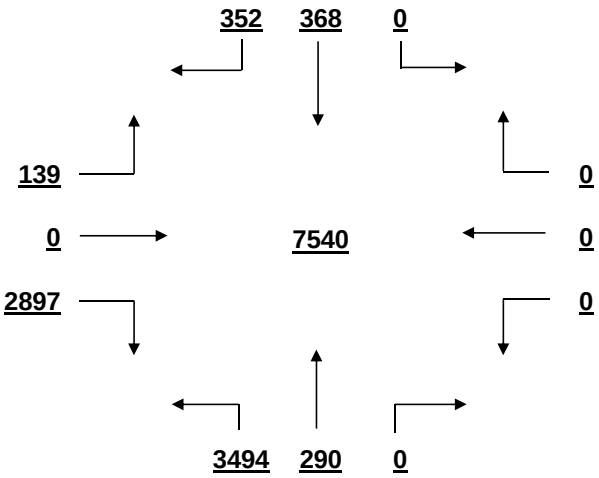

OVERALL PEAK HOUR VOLUME
FROM 17:00 TO 18:00

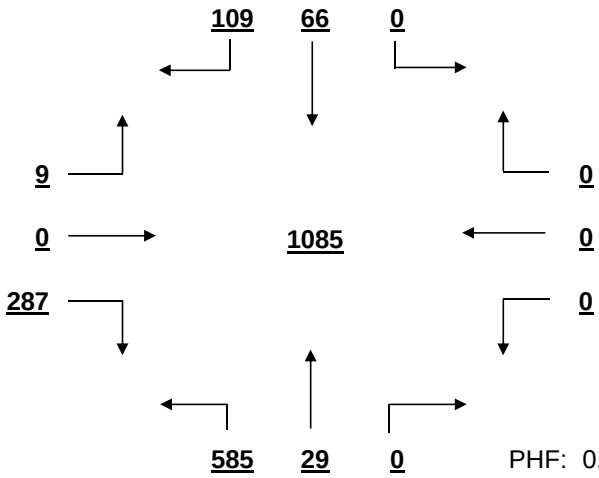

PHF: 0.858

AM PEAK HOUR VOLUME (0:00-10:45)
FROM 7:30 TO 8:30

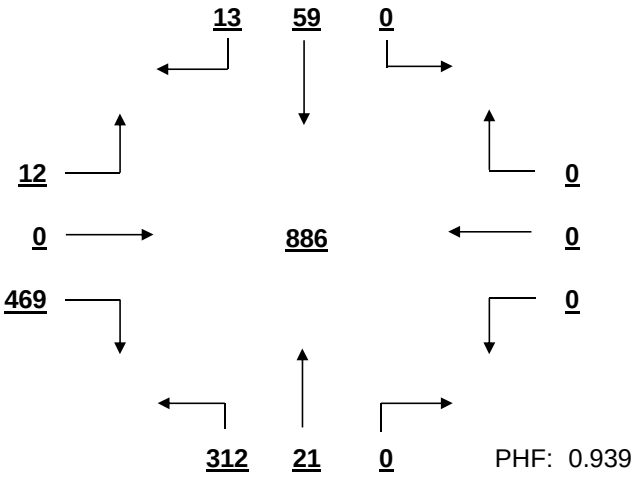

PHF: 0.939

PM PEAK HOUR VOLUME (14:15-23:45)
FROM 17:00 TO 18:00

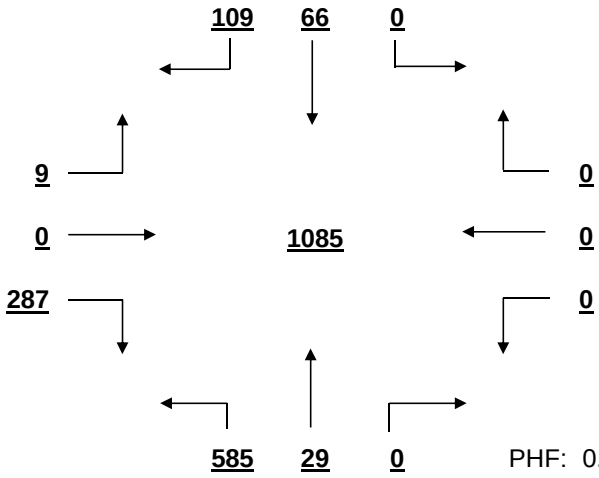

PHF: 0.858

MID-DAY PEAK HOUR VOLUME (11:00-14:00)
FROM 12:00 TO 13:00

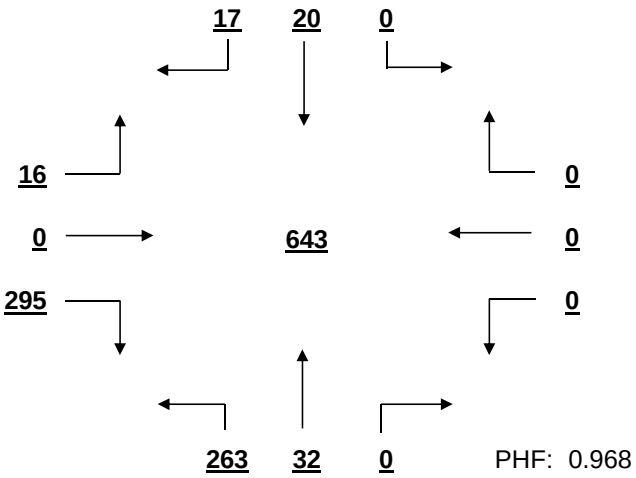

PHF: 0.968

OTHER HOUR VOLUME
FROM 7:00 TO 8:00

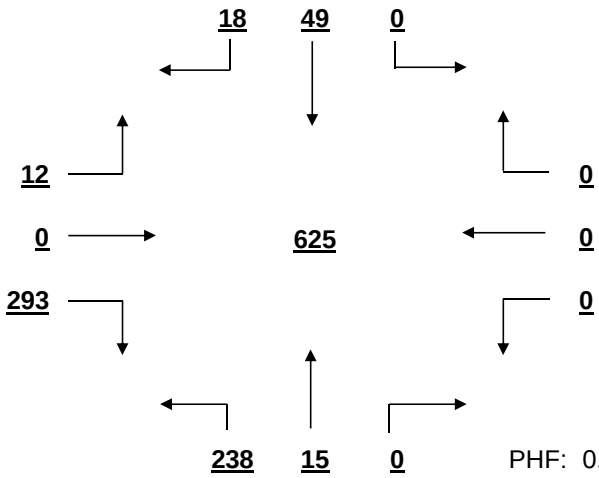

PHF: 0.662

SIGNAL WARRANT ANALYSIS

Morning Hill Dr AT Burnette Dr Date: 12/1/2016

Minor Street Volume, percent of total = 40.3%
Percent of Left Turns from Minor Street = 4.6%
Percent of Right Turns from Minor Street = 95.4%
Percent of Minor Street Right Turns to Remove from Warrant Analysis = 0%
WARRANT BASIS = **100%**

Warrant No. 1 - Vehicular Volume is not met

Condition A - Minimum Vehicular Volume is not met

Average Major Street % of Warrant	Average Minor Street % of Warrant
375.3 / 500 = 75%	253.0 / 150 = 169%

Hourly percent of warrant

	7:00-8:00	8:00-9:00	9:00-10:00	10:00-11:00	11:00-12:00	12:00-13:00	13:00-14:00	14:00-15:00	15:00-16:00	16:00-17:00	17:00-18:00	18:00-19:00
Major St.	64%	73%	45%	33%	48%	66%	65%	65%	73%	112%	158%	99%
Minor St.	203%	264%	111%	107%	144%	207%	157%	130%	167%	215%	197%	121%

Condition B - Interruption to Continuous Traffic is not met

Average Major Street % of Warrant	Average Minor Street % of Warrant
375.3 / 750 = 50%	253.0 / 75 = 337%

Hourly percent of warrant

	7:00-8:00	8:00-9:00	9:00-10:00	10:00-11:00	11:00-12:00	12:00-13:00	13:00-14:00	14:00-15:00	15:00-16:00	16:00-17:00	17:00-18:00	18:00-19:00
Major St.	43%	49%	30%	22%	32%	44%	43%	43%	49%	75%	105%	66%
Minor St.	407%	528%	221%	215%	288%	415%	313%	260%	333%	431%	395%	243%

80% Combination of Conditions A & B is not met

Warrant No. 2 - Four Hour Vehicular Volume is not met

Hourly percent of warrant

	7:00-8:00	8:00-9:00	9:00-10:00	10:00-11:00	11:00-12:00	12:00-13:00	13:00-14:00	14:00-15:00	15:00-16:00	16:00-17:00	17:00-18:00	18:00-19:00
Minor St.	88%	122%	41%	37%	55%	91%	68%	56%	77%	137%	194%	69%

Warrant No. 3 - Peak Hour is met

Percent of warrant

Overall Peak Hour: 17:00-18:00
Minor St. 105%

Percent of warrant

Higher Volume Side Street Peak Hour: 7:30-8:30
Minor St. 100%

Warrant No. 4 - Pedestrian Volume. Pedestrian volume shown are minumum volumes assuming heavy major street traffic. If these volumes are met, warrant 4 requires further engineering analysis

S

Minimum 4 hour ped. volume crossing major street: 107

Minimum peak hour ped. volume crossing major street: 133

Number of pedestrians crossing major street

	7:00-8:00	8:00-9:00	9:00-10:00	10:00-11:00	11:00-12:00	12:00-13:00	13:00-14:00	14:00-15:00	15:00-16:00	16:00-17:00	17:00-18:00	18:00-19:00
Major t.	1	1	0	0	0	0	1	2	1	0	0	1

Warrant No. 7 - Crash Experience (Requires 3 criteria analysis by engineering)

Total Number: 0 From: 1/1/2005 to 1/1/2008
Accident Rate: 0.00 per million entering vehicles

Types of Accidents	No.	/	Avg.		No.	/	Avg.
Right Angle	0	/	0.0	Rear End	0	/	0.0
Lost Control	0	/	0.0	Side Swipe	0	/	0.0
Left Turn	0	/	0.0	Other	0	/	0.0

SOUTH CAROLINA DEPARTMENT OF TRANSPORTATION
DISTRICT 1
TRAFFIC ENGINEERING

County: Richland City: Columbia Date: 11/29/2016

Major Rt: Bush River Rd * Not on State System Minor Rt: Arrowwood Rd Clear

Day of Week: Tuesday Weather: Rain Office: Short Counts JMS

Type of Control: Signal Speed Limit (major st) 40

Direction of Minor Street: N-S Intersection ADT - 29680 (Calc)

Number of Lanes (major st)* 2 Number of Lanes (minor st)* 2

* Each Direction

INTERSECTION VOLUME SUMMARY

	From N Arrowwood Rd				From S Arrowwood Rd				From E Bush River Rd				From W Bush River Rd				Total	Total
	LT	STR	RT	TOT	LT	STR	RT	TOT	LT	STR	RT	TOT	LT	STR	RT	TOT	Vol	Peds
7:00 - 7:15	6	2	34	42	10	0	26	36	0	73	1	74	26	199	22	247	399	0
7:15 - 7:30	7	8	36	51	32	1	49	82	0	92	7	99	43	310	0	353	585	0
7:30 - 7:45	12	5	44	61	37	0	66	103	1	99	12	112	63	340	31	434	710	1
7:45 - 8:00	17	2	33	52	20	0	42	62	1	105	12	118	60	0	44	104	336	0
8:00 - 8:15	12	9	34	55	15	0	34	49	1	98	12	111	51	332	36	419	634	0
8:15 - 8:30	9	5	0	14	15	0	38	53	3	125	11	139	70	354	33	457	663	0
8:30 - 8:45	6	6	36	48	10	0	16	26	1	103	10	114	50	270	26	346	534	0
8:45 - 9:00	14	6	42	62	17	0	21	38	3	87	18	108	47	227	18	292	500	0
9:00 - 9:15	10	3	34	47	8	5	1	14	3	85	12	100	37	179	11	227	388	0
9:15 - 9:30	10	5	36	51	9	1	2	12	1	78	10	89	42	129	13	184	336	0
9:30 - 9:45	13	4	32	49	8	3	4	15	0	95	10	105	36	126	11	173	342	0
9:45 - 10:00	11	4	34	49	9	4	4	17	2	84	10	96	41	141	16	198	360	0
10:00 - 10:15	9	3	35	47	0	5	0	5	6	97	7	110	45	138	8	191	353	0
10:15 - 10:30	19	1	33	53	5	6	6	17	3	99	11	113	27	118	10	155	338	0
10:30 - 10:45	11	2	36	49	12	2	1	15	5	133	7	145	51	132	5	188	397	0
10:45 - 11:00	11	3	44	58	11	3	1	15	8	105	9	122	47	131	9	187	382	0
11:00 - 11:15	15	3	40	58	12	7	10	29	5	108	10	123	35	140	12	187	397	0
11:15 - 11:30	15	3	56	74	17	2	11	30	4	111	9	124	40	146	9	195	423	2
11:30 - 11:45	7	4	46	57	17	6	7	30	5	164	16	185	39	172	10	221	493	0
11:45 - 12:00	16	6	55	77	19	13	10	42	9	140	17	166	52	187	19	258	543	1
12:00 - 12:15	22	13	78	113	16	14	15	45	12	208	14	234	64	187	16	267	659	2
12:15 - 12:30	21	14	63	98	28	20	15	63	13	181	16	210	66	0	17	83	454	0
12:30 - 12:45	14	9	54	77	23	9	15	47	8	175	13	196	63	193	14	270	590	2
12:45 - 13:00	18	8	76	102	24	15	13	52	12	187	19	218	63	192	12	267	639	2
13:00 - 13:15	11	7	66	84	12	6	13	31	10	194	19	223	56	175	11	242	580	1
13:15 - 13:30	23	7	71	101	24	7	13	44	12	165	10	187	43	208	16	267	599	1
13:30 - 13:45	16	8	61	85	32	5	13	50	10	166	13	189	47	175	11	233	557	0
13:45 - 14:00	24	14	53	91	23	10	11	44	4	153	16	173	45	173	10	228	536	0
14:00 - 14:15	12	7	57	76	17	3	10	30	2	153	10	165	42	149	10	201	472	0
14:15 - 14:30	21	3	62	86	14	8	6	28	8	153	8	169	41	164	0	205	488	0
14:30 - 14:45	7	5	48	60	21	6	12	39	8	185	8	201	39	151	9	199	499	0
14:45 - 15:00	21	7	57	85	15	4	10	29	6	132	10	148	48	153	10	211	473	0
15:00 - 15:15	6	3	47	56	20	5	5	30	11	187	10	208	38	154	8	200	494	1
15:15 - 15:30	11	0	57	68	15	6	3	24	6	148	11	165	39	173	11	223	480	0
15:30 - 15:45	10	4	59	73	14	5	4	23	1	192	8	201	49	156	9	214	511	1
15:45 - 16:00	11	2	45	58	15	9	5	29	5	156	9	170	59	172	11	242	499	0
16:00 - 16:15	10	3	48	61	27	2	2	31	2	230	12	244	48	186	11	245	581	0
16:15 - 16:30	7	4	59	70	28	7	4	39	13	221	13	247	48	192	8	248	604	1
16:30 - 16:45	10	12	73	95	42	10	14	66	11	275	10	296	74	188	15	277	734	0
16:45 - 17:00	7	6	43	56	40	11	14	65	5	289	10	304	66	161	13	240	665	0
17:00 - 17:15	12	7	82	101	34	21	4	59	3	300	11	314	58	187	11	256	730	0
17:15 - 17:30	12	5	75	92	55	33	3	91	4	326	8	338	57	203	11	271	792	0
17:30 - 17:45	11	5	70	86	52	19	12	83	4	364	13	381	51	174	6	231	781	0
17:45 - 18:00	10	3	57	70	38	9	5	52	7	217	10	234	56	160	6	222	578	0
18:00 - 18:15	8	3	50	61	34	6	4	44	3	269	2	274	49	156	13	218	597	0
18:15 - 18:30	5	0	46	51	20	9	7	36	9	222	8	239	57	143	6	206	532	0
18:30 - 18:45	7	2	52	61	19	5	10	34	1	191	5	197	64	109	4	177	469	0
18:45 - 19:00	6	5	48	59	18	5	7	30	3	185	7	195	42	123	6	171	455	0
TOTAL	583	250	2397	3230	1003	327	598	1928	254	7905	514	8673	2374	8328	628	11330	25161	15
Trucks	8	2	28	38	12	2	9	23	4	86	12	102	15	89	9	113	276	1.1%
School Buses	24	1	1	26	4	1	2	7	0	17	13	30	1	22	0	23	86	0.3%

TOTAL AND PEAK HOUR VOLUME DIAGRAMS

Bush River Rd AT Arrowwood Rd Date: 11/29/2016

12.0 HOUR TOTAL VOLUME
FROM 7:00 TO 15:00

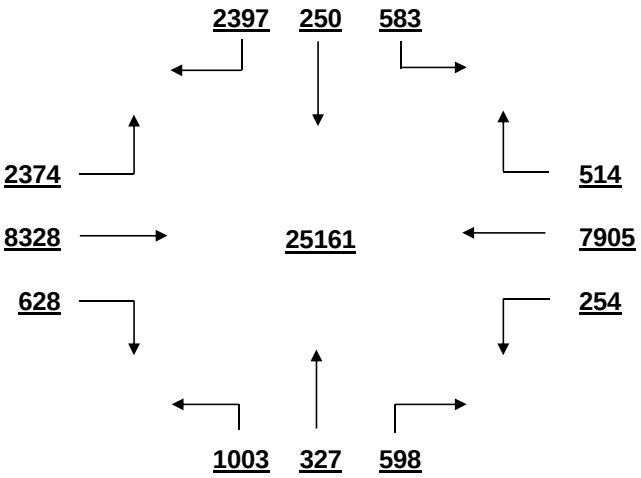

OVERALL PEAK HOUR VOLUME
FROM 16:45 TO 17:45

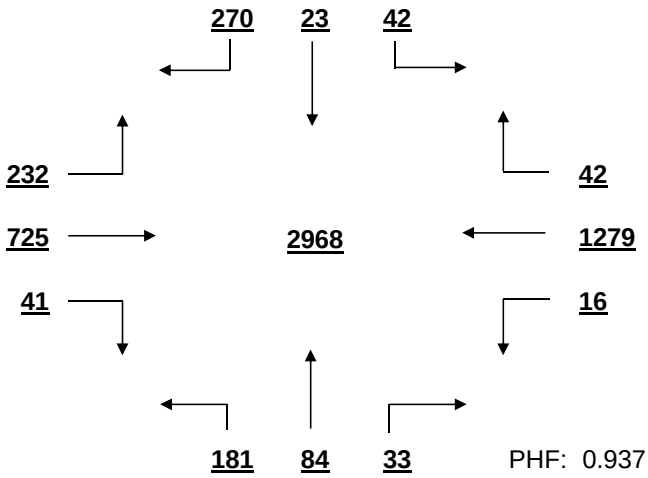

PHF: 0.937

AM PEAK HOUR VOLUME (0:00-10:45)
FROM 7:30 TO 8:30

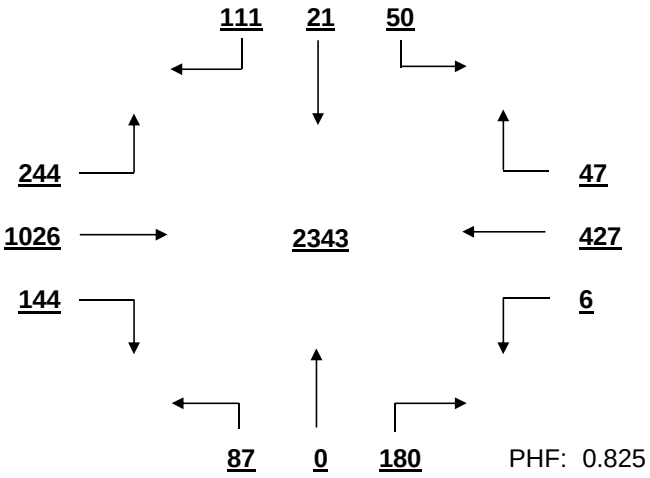

PHF: 0.825

PM PEAK HOUR VOLUME (14:15-23:45)
FROM 16:45 TO 17:45

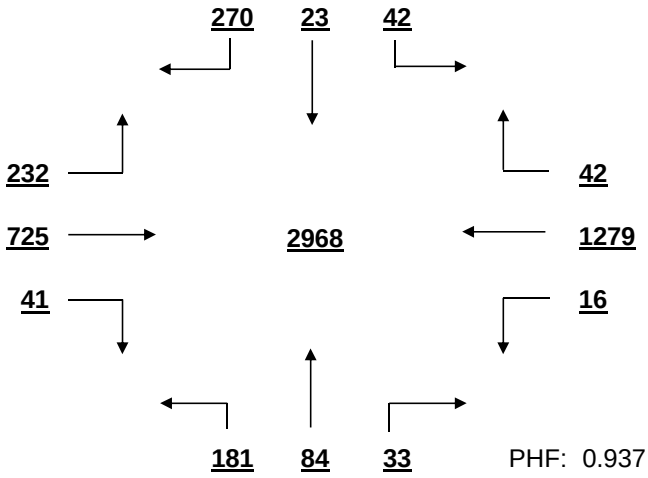

PHF: 0.937

MID-DAY PEAK HOUR VOLUME (11:00-14:00)
FROM 12:30 TO 13:30

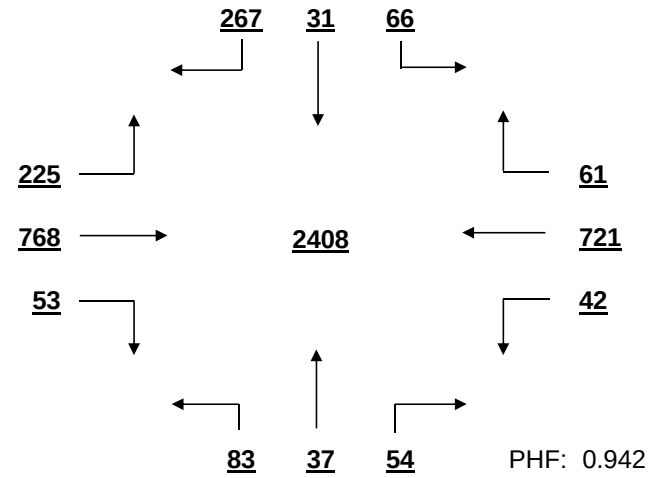

PHF: 0.942

OTHER HOUR VOLUME
FROM 7:00 TO 8:00

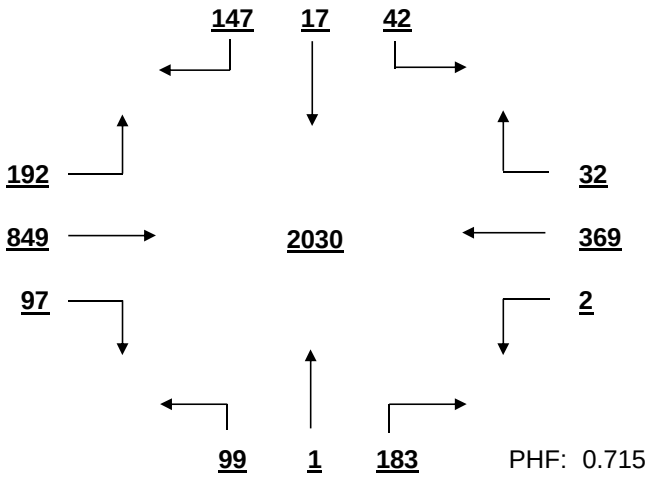

PHF: 0.715

SIGNAL WARRANT ANALYSIS

Bush River Rd AT Arrowwood Rd Date: 11/29/2016

Minor Street Volume, percent of total = 20.5%
Percent of Left Turns from Minor Street = 30.7%
Percent of Right Turns from Minor Street = 58.1%
Percent of Minor Street Right Turns to Remove from Warrant Analysis = 0%
WARRANT BASIS = **100%**

Warrant No. 1 - Vehicular Volume is met

Condition A - Minimum Vehicular Volume is met

Average Major Street % of Warrant				Average Minor Street % of Warrant			
1666.9	/ 600	=	278%	269.2	/ 200	=	135%

Hourly percent of warrant

	7:00-8:00	8:00-9:00	9:00-10:00	10:00-11:00	11:00-12:00	12:00-13:00	13:00-14:00	14:00-15:00	15:00-16:00	16:00-17:00	17:00-18:00	18:00-19:00
Major St.	257%	331%	195%	202%	243%	291%	290%	250%	271%	350%	375%	280%
Minor St.	142%	90%	98%	104%	133%	195%	181%	154%	128%	141%	175%	116%

Condition B - Interruption to Continuous Traffic is met

Average Major Street % of Warrant				Average Minor Street % of Warrant			
1666.9	/ 900	=	185%	269.2	/ 100	=	269%

Hourly percent of warrant

	7:00-8:00	8:00-9:00	9:00-10:00	10:00-11:00	11:00-12:00	12:00-13:00	13:00-14:00	14:00-15:00	15:00-16:00	16:00-17:00	17:00-18:00	18:00-19:00
Major St.	171%	221%	130%	135%	162%	194%	194%	167%	180%	233%	250%	186%
Minor St.	283%	179%	196%	207%	266%	390%	361%	307%	255%	282%	349%	232%

80% Combination of Conditions A & B is met

Warrant No. 2 - Four Hour Vehicular Volume is met

Hourly percent of warrant

	7:00-8:00	8:00-9:00	9:00-10:00	10:00-11:00	11:00-12:00	12:00-13:00	13:00-14:00	14:00-15:00	15:00-16:00	16:00-17:00	17:00-18:00	18:00-19:00
Minor St.	246%	156%	139%	158%	231%	339%	314%	267%	222%	245%	303%	202%

Warrant No. 3 - Peak Hour is met

Percent of warrant
Overall Peak Hour: 16:45-17:45
Minor St. 223%

Percent of warrant
Higher Volume Side Street Peak Hour: 12:00-13:00
Minor St. 260%

Warrant No. 4 - Pedestrian Volume. Pedestrian volume shown are minumum volumes assuming heavy major street traffic. If these volumes are met, warrant 4 requires further engineering analysis

S

Minimum 4 hour ped. volume crossing major street: 107

Minimum peak hour ped. volume crossing major street: 133

Number of pedestrians crossing major street

	7:00-8:00	8:00-9:00	9:00-10:00	10:00-11:00	11:00-12:00	12:00-13:00	13:00-14:00	14:00-15:00	15:00-16:00	16:00-17:00	17:00-18:00	18:00-19:00
Major t.	0	0	0	0	0	1	0	0	0	0	0	0

Warrant No. 7 - Crash Experience (Requires 3 criteria analysis by engineering)

Total Number: 0 From: 1/1/2005 to 1/1/2008
Accident Rate: 0.00 per million entering vehicles

Types of Accidents	No.	/	Avg.		No.	/	Avg.
Right Angle	0	/	0.0	Rear End	0	/	0.0
Lost Control	0	/	0.0	Side Swipe	0	/	0.0
Left Turn	0	/	0.0	Other	0	/	0.0

SOUTH CAROLINA DEPARTMENT OF TRANSPORTATION
DISTRICT 1
TRAFFIC ENGINEERING

County: Richland City: Columbia Date: 11/29/2016

Major Rt: Bush River Rd * Not on State System Minor Rt: Colonial Life Blvd-Mall Clear

Day of Week: Tuesday Weather: Rain Office: Short Counts JMS

Type of Control: Signal Speed Limit (major st) 40

Direction of Minor Street: N-S Intersection ADT - 24450 (Calc)

Number of Lanes (major st)* 2 Number of Lanes (minor st)* 2

* Each Direction

INTERSECTION VOLUME SUMMARY

	From N Colonial Life Blvd				From S Colonial Life Blvd				From E Bush River Rd				From W Bush River Rd				Total	Total
	LT	STR	RT	TOT	LT	STR	RT	TOT	LT	STR	RT	TOT	LT	STR	RT	TOT	Vol	Peds
7:00 - 7:15	2	5	1	8	21	2	4	27	16	61	0	77	1	114	86	201	313	0
7:15 - 7:30	1	4	0	5	24	2	8	34	20	79	0	99	3	162	0	165	303	0
7:30 - 7:45	2	7	0	9	24	3	8	35	9	91	1	101	2	174	161	337	482	0
7:45 - 8:00	0	7	5	12	23	5	8	36	16	108	2	126	3	0	184	187	361	0
8:00 - 8:15	1	8	4	13	40	8	10	58	16	78	5	99	3	149	169	321	491	0
8:15 - 8:30	2	3	0	5	35	6	6	47	16	95	3	114	6	191	168	365	531	0
8:30 - 8:45	2	6	1	9	32	5	16	53	19	91	5	115	3	143	123	269	446	0
8:45 - 9:00	0	0	2	2	31	2	14	47	24	76	0	100	10	115	116	241	390	1
9:00 - 9:15	3	1	2	6	35	3	10	48	11	64	2	77	5	98	76	179	310	1
9:15 - 9:30	3	2	3	8	21	3	9	33	8	69	5	82	10	95	37	142	265	0
9:30 - 9:45	3	3	4	10	24	5	10	39	10	80	1	91	6	67	37	110	250	0
9:45 - 10:00	0	3	4	7	28	3	11	42	12	72	0	84	7	103	48	158	291	0
10:00 - 10:15	2	3	6	11	0	3	0	3	2	79	1	82	16	108	33	157	253	0
10:15 - 10:30	3	3	8	14	34	4	19	57	7	84	3	94	11	96	41	148	313	1
10:30 - 10:45	2	6	12	20	43	5	12	60	11	85	0	96	12	80	44	136	312	0
10:45 - 11:00	3	2	8	13	34	7	15	56	10	77	4	91	19	88	44	151	311	0
11:00 - 11:15	6	4	9	19	33	9	18	60	8	87	2	97	18	94	45	157	333	0
11:15 - 11:30	3	4	12	19	39	6	24	69	9	88	3	100	15	116	45	176	364	0
11:30 - 11:45	3	8	6	17	74	13	32	119	15	104	4	123	18	116	50	184	443	0
11:45 - 12:00	4	3	14	21	66	8	27	101	16	100	2	118	23	131	62	216	456	2
12:00 - 12:15	4	3	13	20	92	12	39	143	8	123	1	132	21	151	55	227	522	2
12:15 - 12:30	2	9	10	21	57	10	26	93	27	143	6	176	34	0	57	91	381	0
12:30 - 12:45	7	8	21	36	67	17	26	110	32	111	4	147	17	130	70	217	510	1
12:45 - 13:00	7	10	18	35	71	12	30	113	21	137	5	163	21	133	65	219	530	1
13:00 - 13:15	7	5	15	27	79	12	35	126	21	125	4	150	13	141	51	205	508	0
13:15 - 13:30	3	7	14	24	59	10	37	106	14	125	2	141	23	155	71	249	520	0
13:30 - 13:45	8	4	16	28	54	11	26	91	20	110	5	135	20	124	49	193	447	2
13:45 - 14:00	9	10	36	55	50	8	22	80	22	118	8	148	14	143	51	208	491	1
14:00 - 14:15	10	8	14	32	49	10	19	78	23	97	4	124	9	116	40	165	399	0
14:15 - 14:30	6	10	17	33	38	13	13	64	19	119	2	140	12	131	0	143	380	0
14:30 - 14:45	6	5	16	27	61	6	32	99	9	121	5	135	17	111	34	162	423	0
14:45 - 15:00	5	6	11	22	45	10	19	74	9	106	4	119	12	138	36	186	401	0
15:00 - 15:15	3	5	8	16	57	10	23	90	16	124	4	144	12	123	29	164	414	0
15:15 - 15:30	6	0	11	17	59	9	20	88	8	107	4	119	12	121	51	184	408	0
15:30 - 15:45	3	5	15	23	67	7	22	96	13	98	1	112	8	127	28	163	394	0
15:45 - 16:00	3	7	14	24	80	11	25	116	10	83	0	93	11	143	36	190	423	0
16:00 - 16:15	5	2	15	22	120	10	21	151	6	141	2	149	13	139	47	199	521	0
16:15 - 16:30	9	7	6	22	104	8	23	135	10	129	6	145	18	137	52	207	509	0
16:30 - 16:45	4	8	13	25	154	19	33	206	6	132	5	143	14	143	57	214	588	0
16:45 - 17:00	6	2	9	17	183	29	37	249	8	130	4	142	14	136	31	181	589	0
17:00 - 17:15	9	13	13	35	191	29	36	256	9	108	5	122	14	135	63	212	625	0
17:15 - 17:30	5	12	15	32	168	31	28	227	7	127	7	141	17	150	53	220	620	0
17:30 - 17:45	5	11	11	27	123	28	18	169	7	170	11	188	20	142	65	227	611	0
17:45 - 18:00	8	7	13	28	79	17	17	113	9	156	10	175	8	122	45	175	491	0
18:00 - 18:15	7	2	13	22	82	14	32	128	11	160	8	179	13	130	32	175	504	0
18:15 - 18:30	3	0	7	10	64	7	19	90	2	157	5	164	13	128	25	166	430	0
18:30 - 18:45	2	2	13	17	69	4	14	87	5	101	6	112	6	99	24	129	345	0
18:45 - 19:00	0	2	16	18	87	14	16	117	3	87	6	96	12	93	30	135	366	0
TOTAL	197	252	494	943	3070	480	969	4519	610	5113	177	5900	609	5781	2816	9206	20568	12
Trucks	1	2	9	12	20	2	5	27	3	65	0	68	7	51	34	92	199	1.0%
School Buses	0	0	0	0	1	0	1	2	1	34	0	35	0	44	1	45	82	0.4%

TOTAL AND PEAK HOUR VOLUME DIAGRAMS

Bush River Rd AT Colonial Life Blvd-Mall Date: 11/29/2016

12.0 HOUR TOTAL VOLUME
FROM 7:00 TO 15:00

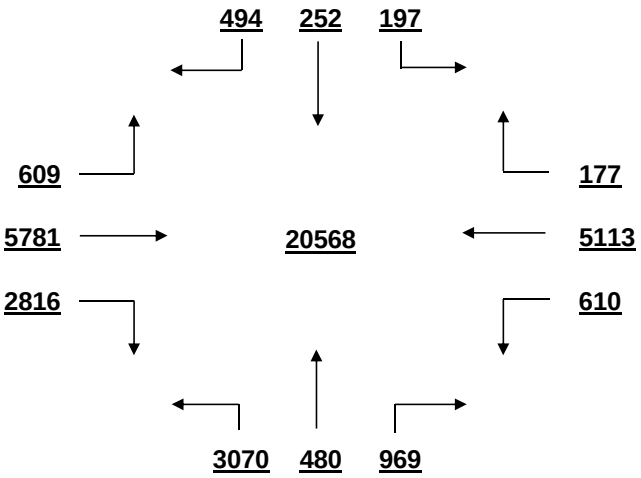

OVERALL PEAK HOUR VOLUME
FROM 16:45 TO 17:45

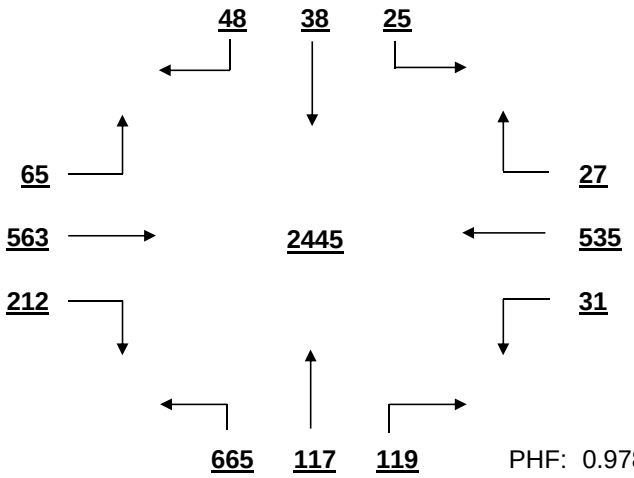

PHF: 0.978

AM PEAK HOUR VOLUME (0:00-10:45)
FROM 7:30 TO 8:30

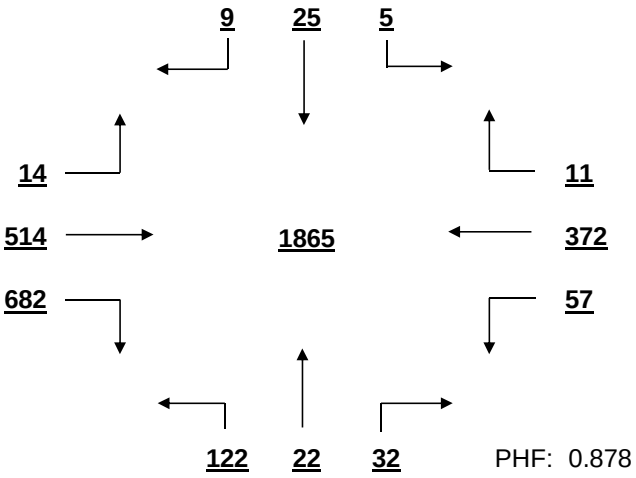

PHF: 0.878

PM PEAK HOUR VOLUME (14:15-23:45)
FROM 16:45 TO 17:45

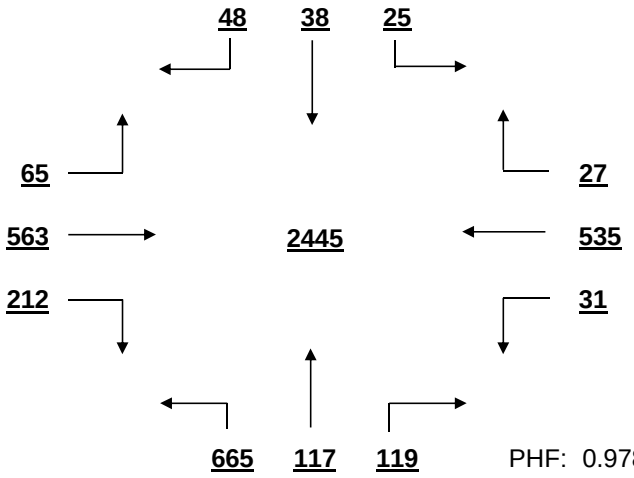

PHF: 0.978

MID-DAY PEAK HOUR VOLUME (11:00-14:00)
FROM 12:30 TO 13:30

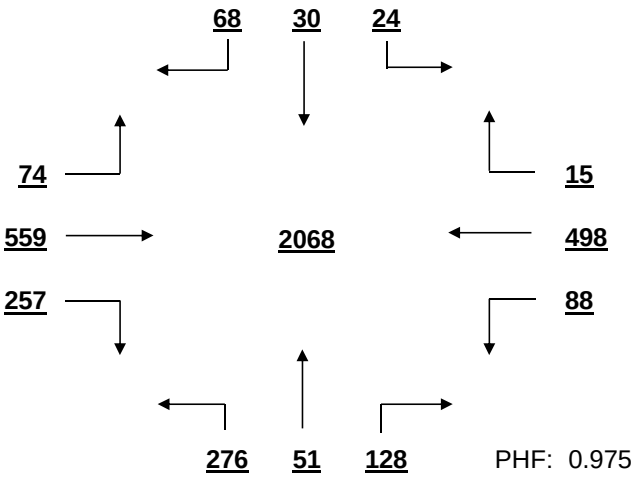

PHF: 0.975

OTHER HOUR VOLUME
FROM 7:00 TO 8:00

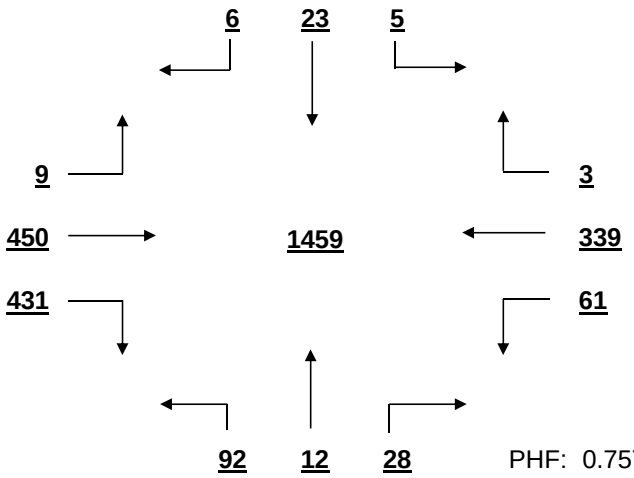

PHF: 0.757

SIGNAL WARRANT ANALYSIS

Bush River Rd AT Colonial Life Blvd-Mall Date: 11/29/2016

Minor Street Volume, percent of total = 26.6%
Percent of Left Turns from Minor Street = 59.8%
Percent of Right Turns from Minor Street = 26.8%
Percent of Minor Street Right Turns to Remove from Warrant Analysis = 0%
WARRANT BASIS = **100%**

Warrant No. 1 - Vehicular Volume is met

Condition A - Minimum Vehicular Volume is met

Average Major Street % of Warrant				Average Minor Street % of Warrant			
1258.8	/ 600	=	210%	376.6	/ 200	=	188%

Hourly percent of warrant

	7:00-8:00	8:00-9:00	9:00-10:00	10:00-11:00	11:00-12:00	12:00-13:00	13:00-14:00	14:00-15:00	15:00-16:00	16:00-17:00	17:00-18:00	18:00-19:00
Major St.	216%	271%	154%	159%	195%	229%	238%	196%	195%	230%	243%	193%
Minor St.	66%	103%	81%	88%	175%	230%	202%	158%	195%	371%	383%	211%

Condition B - Interruption to Continuous Traffic is met

Average Major Street % of Warrant				Average Minor Street % of Warrant			
1258.8	/ 900	=	140%	376.6	/ 100	=	377%

Hourly percent of warrant

	7:00-8:00	8:00-9:00	9:00-10:00	10:00-11:00	11:00-12:00	12:00-13:00	13:00-14:00	14:00-15:00	15:00-16:00	16:00-17:00	17:00-18:00	18:00-19:00
Major St.	144%	180%	103%	106%	130%	152%	159%	130%	130%	153%	162%	128%
Minor St.	132%	205%	162%	176%	349%	459%	403%	315%	390%	741%	765%	422%

80% Combination of Conditions A & B is met

Warrant No. 2 - Four Hour Vehicular Volume is met

Hourly percent of warrant

	7:00-8:00	8:00-9:00	9:00-10:00	10:00-11:00	11:00-12:00	12:00-13:00	13:00-14:00	14:00-15:00	15:00-16:00	16:00-17:00	17:00-18:00	18:00-19:00
Minor St.	116%	178%	72%	83%	248%	399%	350%	225%	276%	644%	665%	291%

Warrant No. 3 - Peak Hour is met

	Percent of warrant		Percent of warrant
Overall Peak Hour:	16:45-17:45	Higher Volume Side Street Peak Hour:	16:30-17:30
Minor St.	435%	Minor St.	416%

Warrant No. 4 - Pedestrian Volume. Pedestrian volume shown are minumum volumes assuming heavy major street traffic. If these volumes are met, warrant 4 requires further engineering analysis

S

Minimum 4 hour ped. volume crossing major street: 107

Minimum peak hour ped. volume crossing major street: 133

Number of pedestrians crossing major street

	7:00-8:00	8:00-9:00	9:00-10:00	10:00-11:00	11:00-12:00	12:00-13:00	13:00-14:00	14:00-15:00	15:00-16:00	16:00-17:00	17:00-18:00	18:00-19:00
Major t.	0	0	0	1	0	2	1	0	0	0	0	0

Warrant No. 7 - Crash Experience (Requires 3 criteria analysis by engineering)

Total Number: 0 From: 1/1/2005 to 1/1/2008
Accident Rate: 0.00 per million entering vehicles

Types of Accidents	No.	/	Avg.		No.	/	Avg.
Right Angle	0	/	0.0	Rear End	0	/	0.0
Lost Control	0	/	0.0	Side Swipe	0	/	0.0
Left Turn	0	/	0.0	Other	0	/	0.0

SOUTH CAROLINA DEPARTMENT OF TRANSPORTATION
DISTRICT 1
TRAFFIC ENGINEERING

County: Richland City: Columbia Date: 11/29/2016

Major Rt: Broad River Rd * Not on State System Minor Rt: Bush River Rd Clear

Day of Week: Tuesday Weather: Rain Office: Short Counts JMS

Type of Control: Signal Speed Limit (major st) 40

Direction of Minor Street: E-W Intersection ADT - 28070 (Calc)

Number of Lanes (major st)* 2 Number of Lanes (minor st)* 2

* Each Direction

INTERSECTION VOLUME SUMMARY

	From N Broad River Rd				From S Broad River Rd				From E Bush River Rd				From W Bush River Rd				Total	Total
	LT	STR	RT	TOT	LT	STR	RT	TOT	LT	STR	RT	TOT	LT	STR	RT	TOT	Vol	Peds
7:00 - 7:15	0	185	54	239	42	106	0	148	0	0	0	0	30	0	79	109	496	0
7:15 - 7:30	0	256	72	328	48	118	0	166	0	0	0	0	41	0	0	41	535	1
7:30 - 7:45	0	298	68	366	49	142	0	191	0	0	0	0	46	0	131	177	734	0
7:45 - 8:00	0	256	61	317	69	161	0	230	0	0	0	0	50	0	121	171	718	0
8:00 - 8:15	0	285	59	344	59	140	0	199	0	0	0	0	30	0	96	126	669	0
8:15 - 8:30	0	262	0	262	68	154	0	222	0	0	0	0	40	0	121	161	645	0
8:30 - 8:45	0	263	64	327	59	138	0	197	0	0	0	0	36	0	88	124	648	1
8:45 - 9:00	0	237	54	291	47	123	0	170	0	0	0	0	46	0	60	106	567	0
9:00 - 9:15	0	175	35	210	50	113	0	163	0	0	0	0	33	0	72	105	478	0
9:15 - 9:30	0	168	23	191	51	118	0	169	0	0	0	0	30	0	58	88	448	1
9:30 - 9:45	0	172	40	212	51	126	0	177	0	0	0	0	37	0	64	101	490	0
9:45 - 10:00	0	138	43	181	47	137	0	184	0	0	0	0	32	0	55	87	452	2
10:00 - 10:15	0	174	25	199	0	121	0	121	0	0	0	0	39	0	70	109	429	0
10:15 - 10:30	0	140	31	171	56	140	0	196	0	0	0	0	29	0	56	85	452	0
10:30 - 10:45	0	155	37	192	59	138	0	197	0	0	0	0	30	0	62	92	481	0
10:45 - 11:00	0	143	22	165	55	138	0	193	0	0	0	0	52	0	55	107	465	0
11:00 - 11:15	0	141	33	174	63	138	0	201	0	0	0	0	40	0	68	108	483	0
11:15 - 11:30	0	141	42	183	82	133	0	215	0	0	0	0	53	0	74	127	525	0
11:30 - 11:45	0	130	43	173	81	140	0	221	0	0	0	0	48	0	79	127	521	1
11:45 - 12:00	0	167	53	220	70	159	0	229	0	0	0	0	50	0	80	130	579	0
12:00 - 12:15	0	144	52	196	71	159	0	230	0	0	0	0	74	0	94	168	594	0
12:15 - 12:30	0	197	71	268	85	184	0	269	0	0	0	0	44	0	101	145	682	0
12:30 - 12:45	0	180	49	229	88	168	0	256	0	0	0	0	62	0	101	163	648	0
12:45 - 13:00	0	166	49	215	80	182	0	262	0	0	0	0	48	0	108	156	633	0
13:00 - 13:15	0	183	48	231	86	154	0	240	0	0	0	0	58	0	117	175	646	3
13:15 - 13:30	0	164	42	206	72	169	0	241	0	0	0	0	57	0	100	157	604	0
13:30 - 13:45	0	169	45	214	68	162	0	230	0	0	0	0	53	0	95	148	592	0
13:45 - 14:00	0	154	38	192	72	174	0	246	0	0	0	0	51	0	107	158	596	1
14:00 - 14:15	0	162	46	208	68	170	0	238	0	0	0	0	51	0	98	149	595	0
14:15 - 14:30	0	166	51	217	76	144	0	220	0	0	0	0	49	0	0	49	486	0
14:30 - 14:45	0	158	39	197	67	167	0	234	0	0	0	0	49	0	78	127	558	0
14:45 - 15:00	0	176	24	200	79	153	0	232	0	0	0	0	62	0	98	160	592	0
15:00 - 15:15	0	125	46	171	76	170	0	246	0	0	0	0	57	0	96	153	570	2
15:15 - 15:30	0	0	46	46	68	169	0	237	0	0	0	0	44	0	89	133	416	0
15:30 - 15:45	0	147	27	174	59	179	0	238	0	0	0	0	60	0	103	163	575	0
15:45 - 16:00	0	147	40	187	68	203	0	271	0	0	0	0	71	0	84	155	613	0
16:00 - 16:15	0	160	42	202	80	210	0	290	0	0	0	0	82	0	95	177	669	0
16:15 - 16:30	0	135	41	176	85	209	0	294	0	0	0	0	68	0	101	169	639	0
16:30 - 16:45	0	170	42	212	94	246	0	340	0	0	0	0	88	0	95	183	735	0
16:45 - 17:00	0	169	25	194	92	214	0	306	0	0	0	0	87	0	96	183	683	1
17:00 - 17:15	0	165	36	201	73	270	0	343	0	0	0	0	53	0	110	163	707	0
17:15 - 17:30	0	140	36	176	99	206	0	305	0	0	0	0	85	0	92	177	658	0
17:30 - 17:45	0	138	27	165	105	225	0	330	0	0	0	0	65	0	99	164	659	0
17:45 - 18:00	0	154	47	201	113	297	0	410	0	0	0	0	67	0	81	148	759	0
18:00 - 18:15	0	116	37	153	130	279	0	409	0	0	0	0	70	0	99	169	731	0
18:15 - 18:30	0	0	39	39	94	235	0	329	0	0	0	0	62	0	103	165	533	0
18:30 - 18:45	0	174	36	210	78	232	0	310	0	0	0	0	31	0	75	106	626	1
18:45 - 19:00	0	142	21	163	73	225	0	298	0	0	0	0	46	0	84	130	591	0
TOTAL	0	7987	2001	9988	3405	8238	0	11643	0	0	0	0	2486	0	4088	6574	28205	14
Trucks	0	147	21	168	52	118	0	170	0	0	0	0	23	0	60	83	421	1.5%
School Buses	0	22	21	43	25	37	0	62	0	0	0	0	17	0	26	43	148	0.5%

TOTAL AND PEAK HOUR VOLUME DIAGRAMS

Broad River Rd AT Bush River Rd Date: 11/29/2016

12.0 HOUR TOTAL VOLUME
FROM 7:00 TO 15:00

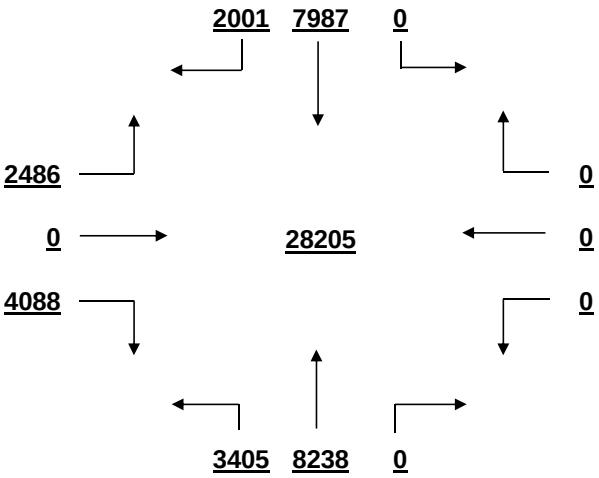

OVERALL PEAK HOUR VOLUME
FROM 17:15 TO 18:15

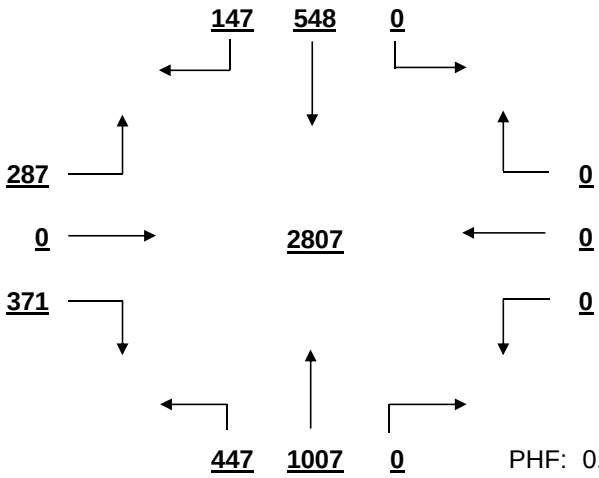

PHF: 0.925

AM PEAK HOUR VOLUME (0:00-10:45)
FROM 7:30 TO 8:30

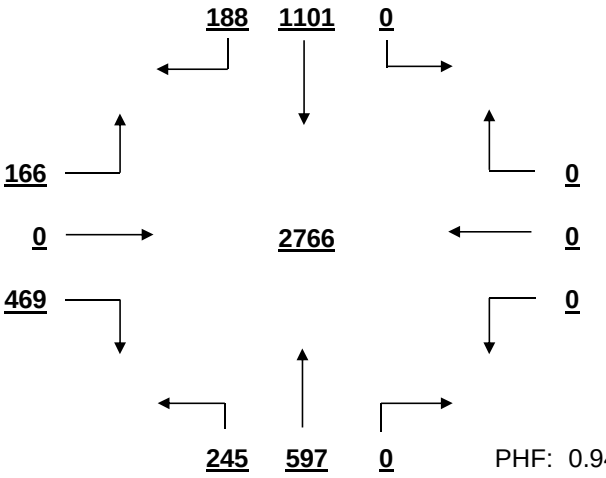

PHF: 0.942

PM PEAK HOUR VOLUME (14:15-23:45)
FROM 17:15 TO 18:15

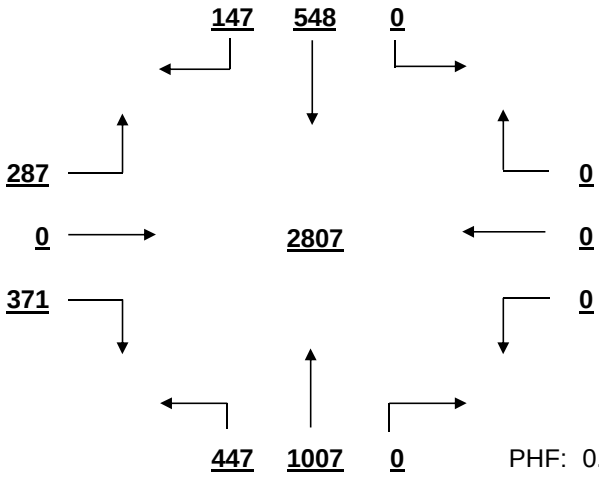

PHF: 0.925

MID-DAY PEAK HOUR VOLUME (11:00-14:00)
FROM 12:15 TO 13:15

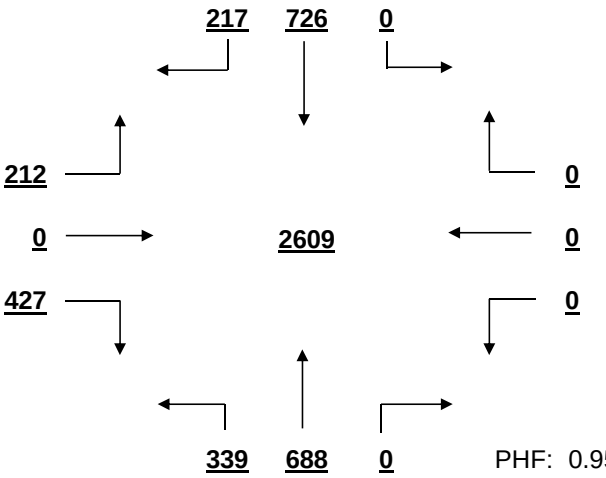

PHF: 0.956

OTHER HOUR VOLUME
FROM 7:00 TO 8:00

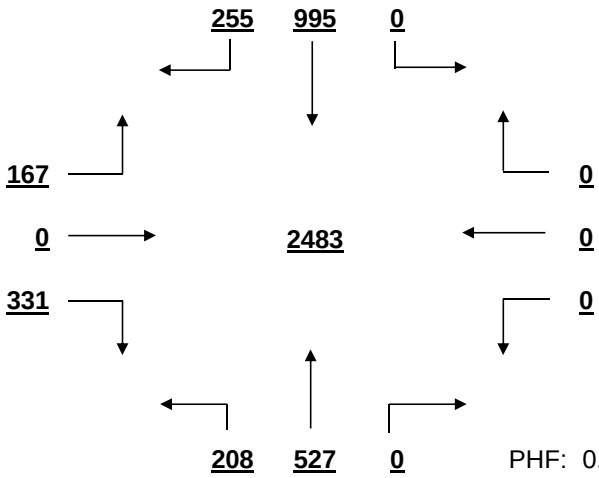

PHF: 0.846

SIGNAL WARRANT ANALYSIS

Broad River Rd AT Bush River Rd Date: 11/29/2016

Minor Street Volume, percent of total = 23.3%
Percent of Left Turns from Minor Street = 37.8%
Percent of Right Turns from Minor Street = 62.2%
Percent of Minor Street Right Turns to Remove from Warrant Analysis = 0%
WARRANT BASIS = **100%**

Warrant No. 1 - Vehicular Volume is met

Condition A - Minimum Vehicular Volume is met

Average Major Street % of Warrant				Average Minor Street % of Warrant			
1802.6	/ 600	=	300%	547.8	/ 200	=	274%

Hourly percent of warrant

	7:00 - 8:00	8:00 - 9:00	9:00 - 10:00	10:00 - 11:00	11:00 - 12:00	12:00 - 13:00	13:00 - 14:00	14:00 - 15:00	15:00 - 16:00	16:00 - 17:00	17:00 - 18:00	18:00 - 19:00
Major St.	331%	335%	248%	239%	269%	321%	300%	291%	262%	336%	355%	319%
Minor St.	249%	259%	191%	197%	246%	316%	319%	243%	302%	356%	326%	285%

Condition B - Interruption to Continuous Traffic is met

Average Major Street % of Warrant				Average Minor Street % of Warrant			
1802.6	/ 900	=	200%	547.8	/ 100	=	548%

Hourly percent of warrant

	7:00 - 8:00	8:00 - 9:00	9:00 - 10:00	10:00 - 11:00	11:00 - 12:00	12:00 - 13:00	13:00 - 14:00	14:00 - 15:00	15:00 - 16:00	16:00 - 17:00	17:00 - 18:00	18:00 - 19:00
Major St.	221%	224%	165%	159%	180%	214%	200%	194%	174%	224%	237%	212%
Minor St.	498%	517%	381%	393%	492%	632%	638%	485%	604%	712%	652%	570%

80% Combination of Conditions A & B is met

Warrant No. 2 - Four Hour Vehicular Volume is met

Hourly percent of warrant

	7:00 - 8:00	8:00 - 9:00	9:00 - 10:00	10:00 - 11:00	11:00 - 12:00	12:00 - 13:00	13:00 - 14:00	14:00 - 15:00	15:00 - 16:00	16:00 - 17:00	17:00 - 18:00	18:00 - 19:00
Minor St.	433%	450%	331%	342%	428%	550%	555%	422%	525%	619%	567%	496%

Warrant No. 3 - Peak Hour is met

Overall Peak Hour: 17:15 - 18:15 — Percent of warrant
Minor St. 439%

Higher Volume Side Street Peak Hour: 16:00 - 17:00 — Percent of warrant
Minor St. 475%

Warrant No. 4 - Pedestrian Volume. Pedestrian volume shown are minumum volumes assuming heavy major street traffic. If these volumes are met, warrant 4 requires further engineering analysis

S

Minimum 4 hour ped. volume crossing major street: 107

Minimum peak hour ped. volume crossing major street: 133

Number of pedestrians crossing major street

	7:00 - 8:00	8:00 - 9:00	9:00 - 10:00	10:00 - 11:00	11:00 - 12:00	12:00 - 13:00	13:00 - 14:00	14:00 - 15:00	15:00 - 16:00	16:00 - 17:00	17:00 - 18:00	18:00 - 19:00
Major t.	0	0	0	0	0	0	1	0	1	0	0	0

Warrant No. 7 - Crash Experience (Requires 3 criteria analysis by engineering)

Total Number: 0 From: 1/1/2005 to 1/1/2008
Accident Rate: 0.00 per million entering vehicles

Types of Accidents	No.	/	Avg.		No.	/	Avg.
Right Angle	0	/	0.0	Rear End	0	/	0.0
Lost Control	0	/	0.0	Side Swipe	0	/	0.0
Left Turn	0	/	0.0	Other	0	/	0.0

SOUTH CAROLINA DEPARTMENT OF TRANSPORTATION
DISTRICT 1
TRAFFIC ENGINEERING

County: Richland City: Columbia Date: 11/29/2016

Major Rt: Broad River Rd * Not on State System Minor Rt: Arrowwood Dr-Means Ave Clear

Day of Week: Tuesday Weather: Rain Office: Short Counts JMS

Type of Control: Signal Speed Limit (major st) 40

Direction of Minor Street: E-W Intersection ADT - 23110 (Calc)

Number of Lanes (major st)* 2 Number of Lanes (minor st)* 1

* Each Direction

INTERSECTION VOLUME SUMMARY

	From N Broad River Rd				From S Broad River Rd				From E Arrowwood Dr-Means				From W Arrowwood Dr-Means				Total	Total
	LT	STR	RT	TOT	LT	STR	RT	TOT	LT	STR	RT	TOT	LT	STR	RT	TOT	Vol	Peds
7:00 - 7:15	1	225	10	236	15	106	0	121	0	0	3	3	10	0	10	20	380	0
7:15 - 7:30	0	321	10	331	21	128	1	150	1	1	0	2	9	0	0	9	492	1
7:30 - 7:45	0	390	7	397	17	150	0	167	0	0	2	2	10	0	19	29	595	0
7:45 - 8:00	4	352	8	364	23	172	0	195	1	0	1	2	5	0	15	20	581	0
8:00 - 8:15	3	325	6	334	20	154	0	174	2	0	0	2	5	0	18	23	533	0
8:15 - 8:30	1	366	0	367	6	194	0	200	2	0	2	4	6	0	7	13	584	0
8:30 - 8:45	0	329	0	329	5	173	1	179	2	1	0	3	7	0	9	16	527	1
8:45 - 9:00	1	266	2	269	15	149	0	164	3	0	1	4	2	0	5	7	444	1
9:00 - 9:15	0	244	1	245	4	129	0	133	1	1	0	2	2	1	6	9	389	1
9:15 - 9:30	0	214	2	216	3	137	0	140	1	1	0	2	1	0	1	2	360	0
9:30 - 9:45	4	197	3	204	1	155	0	156	4	0	2	6	4	0	2	6	372	2
9:45 - 10:00	0	178	4	182	0	165	0	165	0	0	0	0	0	2	4	6	353	0
10:00 - 10:15	0	214	3	217	0	151	0	151	0	0	0	0	3	0	6	9	377	1
10:15 - 10:30	0	190	2	192	4	180	0	184	2	0	2	4	2	0	6	8	388	0
10:30 - 10:45	0	198	1	199	2	178	1	181	0	0	0	0	3	0	2	5	385	0
10:45 - 11:00	0	179	2	181	2	166	4	172	1	0	0	1	0	0	6	6	360	2
11:00 - 11:15	0	178	2	180	2	178	0	180	1	0	1	2	3	0	7	10	372	1
11:15 - 11:30	0	201	6	207	4	199	0	203	1	0	0	1	4	0	6	10	421	0
11:30 - 11:45	1	196	2	199	5	201	0	206	1	0	0	1	1	0	5	6	412	2
11:45 - 12:00	1	208	3	212	3	198	0	201	1	1	1	3	3	0	5	8	424	2
12:00 - 12:15	0	215	0	215	4	225	0	229	0	0	3	3	7	0	10	17	464	2
12:15 - 12:30	0	255	6	261	1	232	0	233	1	0	0	1	3	0	8	11	506	0
12:30 - 12:45	1	253	3	257	2	230	0	232	0	0	4	4	11	1	12	24	517	0
12:45 - 13:00	0	255	5	260	2	217	0	219	1	0	0	1	8	0	10	18	498	2
13:00 - 13:15	2	247	7	256	4	213	0	217	1	0	0	1	2	0	4	6	480	2
13:15 - 13:30	2	246	3	251	4	227	0	231	2	0	2	4	4	0	9	13	499	0
13:30 - 13:45	0	246	8	254	5	196	1	202	0	0	1	1	4	0	5	9	466	1
13:45 - 14:00	1	239	2	242	5	221	2	228	1	0	2	3	1	0	7	8	481	2
14:00 - 14:15	0	211	3	214	9	222	0	231	3	0	1	4	2	0	10	12	461	1
14:15 - 14:30	0	246	4	250	7	202	0	209	2	0	1	3	3	1	0	4	466	0
14:30 - 14:45	1	210	3	214	9	198	0	207	0	0	0	0	8	1	19	28	449	0
14:45 - 15:00	2	249	4	255	5	206	0	211	1	0	0	1	9	0	16	25	492	3
15:00 - 15:15	0	210	2	212	4	202	1	207	1	0	1	2	9	0	7	16	437	2
15:15 - 15:30	1	0	1	2	5	201	1	207	1	0	0	1	6	0	8	14	224	0
15:30 - 15:45	1	213	3	217	7	230	1	238	1	0	0	1	6	0	11	17	473	1
15:45 - 16:00	0	227	3	230	12	224	0	236	0	1	0	1	6	0	13	19	486	0
16:00 - 16:15	1	215	4	220	8	250	2	260	0	0	4	4	8	0	21	29	513	0
16:15 - 16:30	0	204	8	212	9	253	0	262	1	0	2	3	16	0	17	33	510	0
16:30 - 16:45	0	208	5	213	4	277	0	281	4	0	1	5	10	0	26	36	535	0
16:45 - 17:00	2	242	5	249	9	282	0	291	1	0	3	4	4	1	14	19	563	1
17:00 - 17:15	1	241	2	244	10	319	4	333	4	0	1	5	13	0	19	32	614	0
17:15 - 17:30	2	219	3	224	21	269	2	292	4	0	4	8	5	0	18	23	547	0
17:30 - 17:45	0	202	6	208	27	307	0	334	3	1	3	7	6	1	24	31	580	0
17:45 - 18:00	0	206	6	212	20	312	1	333	4	2	1	7	3	0	15	18	570	0
18:00 - 18:15	0	193	7	200	24	334	3	361	5	0	3	8	5	0	15	20	589	1
18:15 - 18:30	0	0	2	2	6	296	0	302	1	0	0	1	5	1	20	26	331	0
18:30 - 18:45	0	203	1	204	8	255	1	264	1	0	0	1	3	0	7	10	479	0
18:45 - 19:00	1	197	0	198	5	266	1	272	1	0	0	1	2	0	3	5	476	0
TOTAL	34	10823	180	11037	388	10129	27	10544	68	9	52	129	249	9	487	745	22455	32
Trucks	0	151	6	157	4	137	0	141	0	0	0	0	4	0	7	11	309	1.4%
School Buses	0	38	2	40	10	43	0	53	0	0	0	0	18	3	12	33	126	0.6%

TOTAL AND PEAK HOUR VOLUME DIAGRAMS

Broad River Rd AT Arrowwood Dr-Means Ave Date: 11/29/2016

12.0 HOUR TOTAL VOLUME
FROM 7:00 TO 15:00

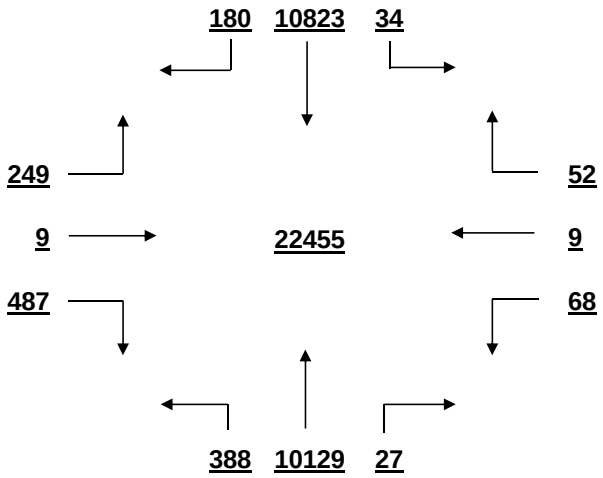

OVERALL PEAK HOUR VOLUME
FROM 17:00 TO 18:00

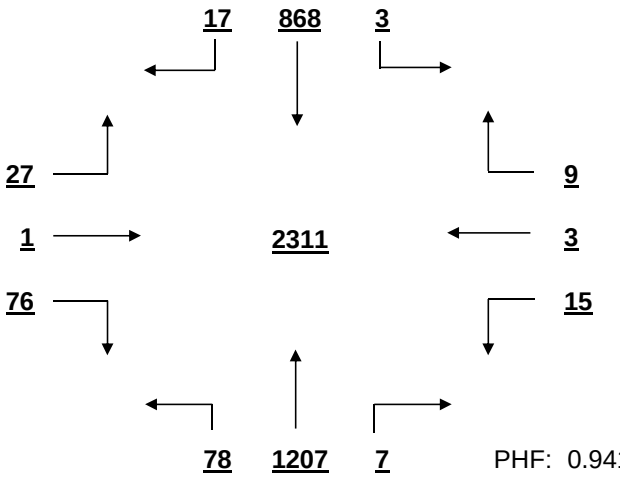

PHF: 0.941

AM PEAK HOUR VOLUME (0:00-10:45)
FROM 7:30 TO 8:30

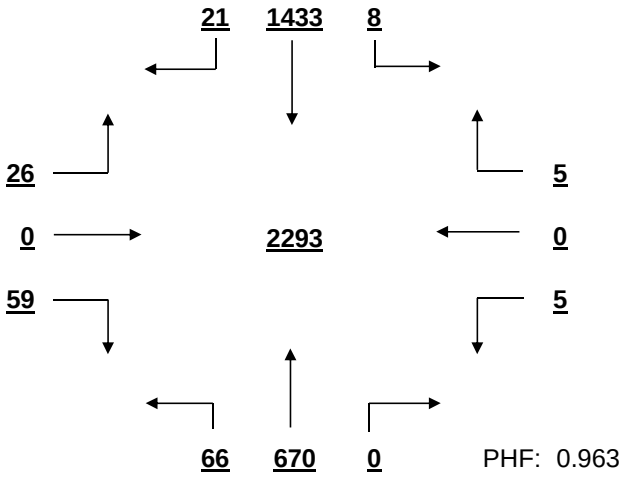

PHF: 0.963

PM PEAK HOUR VOLUME (14:15-23:45)
FROM 17:00 TO 18:00

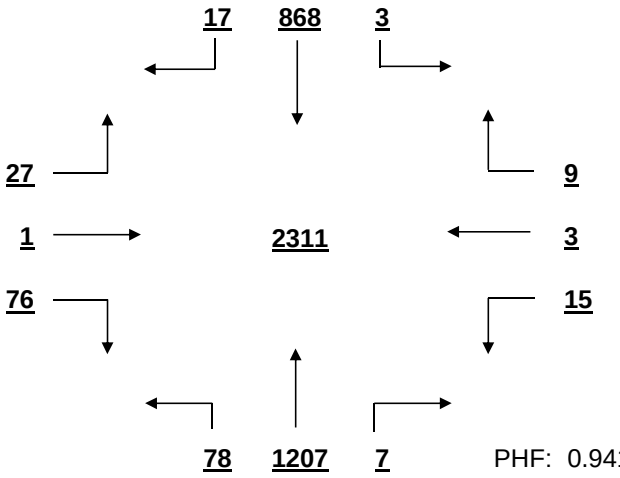

PHF: 0.941

MID-DAY PEAK HOUR VOLUME (11:00-14:00)
FROM 12:15 TO 13:15

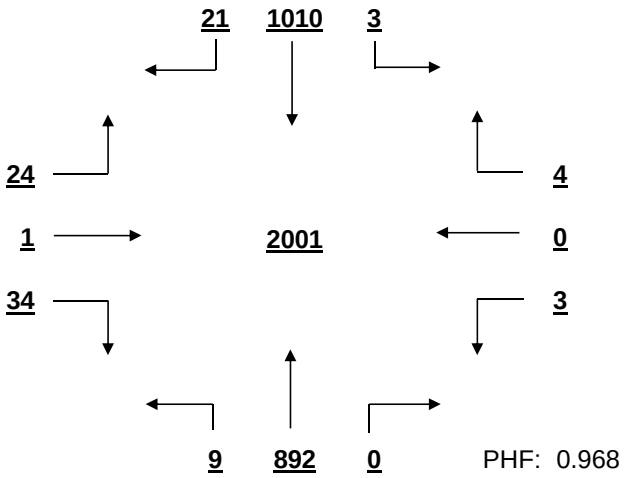

PHF: 0.968

OTHER HOUR VOLUME
FROM 7:00 TO 8:00

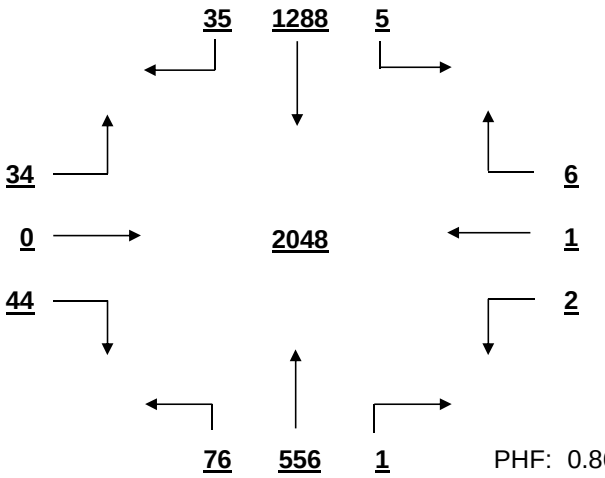

PHF: 0.861

SIGNAL WARRANT ANALYSIS

Broad River Rd AT Arrowwood Dr-Means Ave Date: 11/29/2016

Minor Street Volume, percent of total = 3.9%
Percent of Left Turns from Minor Street = 36.3%
Percent of Right Turns from Minor Street = 61.7%
Percent of Minor Street Right Turns to Remove from Warrant Analysis = 0%
WARRANT BASIS = **100%**

Warrant No. 1 - Vehicular Volume is not met

Condition A - Minimum Vehicular Volume is not met

Average Major Street % of Warrant				Average Minor Street % of Warrant			
1798.4	/ 600 =	300%		62.1	/ 150 =	41%	

Hourly percent of warrant

	7:00 - 8:00	8:00 - 9:00	9:00 - 10:00	10:00 - 11:00	11:00 - 12:00	12:00 - 13:00	13:00 - 14:00	14:00 - 15:00	15:00 - 16:00	16:00 - 17:00	17:00 - 18:00	18:00 - 19:00
Major St.	327%	336%	240%	246%	265%	318%	314%	299%	258%	331%	363%	301%
Minor St.	52%	39%	15%	19%	23%	47%	24%	46%	44%	78%	69%	41%

Condition B - Interruption to Continuous Traffic is not met

Average Major Street % of Warrant				Average Minor Street % of Warrant			
1798.4	/ 900 =	200%		62.1	/ 75 =	83%	

Hourly percent of warrant

	7:00 - 8:00	8:00 - 9:00	9:00 - 10:00	10:00 - 11:00	11:00 - 12:00	12:00 - 13:00	13:00 - 14:00	14:00 - 15:00	15:00 - 16:00	16:00 - 17:00	17:00 - 18:00	18:00 - 19:00
Major St.	218%	224%	160%	164%	176%	212%	209%	199%	172%	221%	242%	200%
Minor St.	104%	79%	31%	37%	45%	93%	48%	92%	88%	156%	139%	81%

80% Combination of Conditions A & B is not met

Warrant No. 2 - Four Hour Vehicular Volume is not met

Hourly percent of warrant

	7:00 - 8:00	8:00 - 9:00	9:00 - 10:00	10:00 - 11:00	11:00 - 12:00	12:00 - 13:00	13:00 - 14:00	14:00 - 15:00	15:00 - 16:00	16:00 - 17:00	17:00 - 18:00	18:00 - 19:00
Minor St.	98%	74%	29%	35%	43%	88%	45%	86%	83%	146%	130%	76%

Warrant No. 3 - Peak Hour is met

Overall Peak Hour: 17:00 - 18:00 — Percent of warrant
Minor St. 104%

Higher Volume Side Street Peak Hour: 16:15 - 17:15 — Percent of warrant
Minor St. 120%

Warrant No. 4 - Pedestrian Volume. Pedestrian volume shown are minumum volumes assuming heavy major street traffic. If these volumes are met, warrant 4 requires further engineering analysis

S

Minimum 4 hour ped. volume crossing major street: 107

Minimum peak hour ped. volume crossing major street: 133

Number of pedestrians crossing major street

	7:00 - 8:00	8:00 - 9:00	9:00 - 10:00	10:00 - 11:00	11:00 - 12:00	12:00 - 13:00	13:00 - 14:00	14:00 - 15:00	15:00 - 16:00	16:00 - 17:00	17:00 - 18:00	18:00 - 19:00
Major t.	0	0	1	1	0	0	2	1	0	0	0	0

Warrant No. 7 - Crash Experience (Requires 3 criteria analysis by engineering)

Total Number: 0 From: 1/1/2005 to 1/1/2008
Accident Rate: 0.00 per million entering vehicles

Types of Accidents	No.	/	Avg.		No.	/	Avg.
Right Angle	0	/	0.0	Rear End	0	/	0.0
Lost Control	0	/	0.0	Side Swipe	0	/	0.0
Left Turn	0	/	0.0	Other	0	/	0.0

SOUTH CAROLINA DEPARTMENT OF TRANSPORTATION
DISTRICT 1
TRAFFIC ENGINEERING

County: Richland City: Columbia Date: 11/29/2016

Major Rt: Broad River Rd * Not on State System Minor Rt: Greystone Blvd-Gas Station Clear

Day of Week: Tuesday Weather: Rain Office: Short Counts JMS

Type of Control: Signal Speed Limit (major st) 40

Direction of Minor Street: N-S Intersection ADT - 32150 (Calc)

Number of Lanes (major st)* 2 Number of Lanes (minor st)* 2

* Each Direction

INTERSECTION VOLUME SUMMARY

	From N Greystone Blvd-Gas				From S Greystone Blvd-Gas				From E Broad River Rd				From W Broad River Rd				Total	Total
	LT	STR	RT	TOT	LT	STR	RT	TOT	LT	STR	RT	TOT	LT	STR	RT	TOT	Vol	Peds
7:00 - 7:15	2	0	5	7	24	0	30	54	66	86	8	160	4	173	80	257	478	1
7:15 - 7:30	1	0	11	12	34	1	52	87	101	125	4	230	6	218	0	224	553	0
7:30 - 7:45	1	0	8	9	27	3	52	82	101	129	9	239	4	261	151	416	746	2
7:45 - 8:00	0	1	8	9	40	2	54	96	123	174	7	304	4	0	137	141	550	0
8:00 - 8:15	2	0	7	9	33	2	43	78	103	146	4	253	5	243	135	383	723	0
8:15 - 8:30	2	0	0	2	42	2	36	80	100	173	4	277	2	231	142	375	734	1
8:30 - 8:45	1	0	4	5	32	2	40	74	85	134	4	223	0	200	129	329	631	2
8:45 - 9:00	3	2	2	7	42	0	32	74	81	127	7	215	0	192	119	311	607	1
9:00 - 9:15	0	1	5	6	32	0	40	72	52	99	5	156	3	149	91	243	477	0
9:15 - 9:30	3	1	4	8	42	0	38	80	69	105	3	177	1	118	77	196	461	2
9:30 - 9:45	4	0	7	11	51	1	46	98	57	107	5	169	2	121	85	208	486	1
9:45 - 10:00	1	0	7	8	51	3	29	83	47	124	5	176	2	105	78	185	452	1
10:00 - 10:15	1	1	6	8	0	1	0	1	49	108	3	160	2	146	68	216	385	0
10:15 - 10:30	2	1	6	9	54	2	37	93	41	134	5	180	4	121	63	188	470	0
10:30 - 10:45	2	2	10	14	54	3	36	93	48	125	8	181	5	125	75	205	493	1
10:45 - 11:00	1	1	7	9	35	1	38	74	45	116	4	165	1	125	79	205	453	0
11:00 - 11:15	0	2	7	9	49	1	33	83	37	127	1	165	2	131	57	190	447	0
11:15 - 11:30	4	1	7	12	47	0	37	84	23	137	0	160	1	125	75	201	457	0
11:30 - 11:45	1	0	4	5	80	0	40	120	37	133	0	170	4	119	58	181	476	0
11:45 - 12:00	3	2	4	9	51	3	40	94	50	133	0	183	0	128	88	216	502	0
12:00 - 12:15	3	1	9	13	98	3	59	160	39	108	0	147	6	136	79	221	541	0
12:15 - 12:30	1	1	9	11	74	0	26	100	49	153	0	202	1	0	91	92	405	0
12:30 - 12:45	1	0	14	15	70	4	48	122	60	146	0	206	2	155	128	285	628	1
12:45 - 13:00	1	1	6	8	84	3	40	127	61	146	0	207	1	166	89	256	598	3
13:00 - 13:15	3	2	8	13	85	5	56	146	43	146	6	195	3	172	93	268	622	0
13:15 - 13:30	2	0	9	11	67	2	43	112	48	145	7	200	3	159	85	247	570	0
13:30 - 13:45	1	1	13	15	53	2	51	106	43	142	11	196	4	174	90	268	585	1
13:45 - 14:00	2	1	9	12	78	3	51	132	56	150	7	213	2	147	85	234	591	0
14:00 - 14:15	2	0	12	14	63	2	59	124	39	140	7	186	2	161	67	230	554	3
14:15 - 14:30	3	0	6	9	52	2	58	112	50	158	6	214	1	178	0	179	514	0
14:30 - 14:45	2	1	6	9	62	3	54	119	60	150	7	217	2	155	67	224	569	0
14:45 - 15:00	1	0	10	11	65	0	55	120	44	148	8	200	3	177	80	260	591	0
15:00 - 15:15	1	1	9	11	74	3	50	127	45	151	5	201	4	146	61	211	550	1
15:15 - 15:30	3	0	11	14	53	4	51	108	55	153	7	215	4	172	73	249	586	0
15:30 - 15:45	1	0	5	6	67	2	49	118	55	173	3	231	2	151	76	229	584	0
15:45 - 16:00	3	1	4	8	45	0	73	118	53	190	3	246	5	151	63	219	591	1
16:00 - 16:15	2	0	7	9	77	2	98	177	48	199	5	252	2	187	55	244	682	0
16:15 - 16:30	2	3	7	12	66	4	72	142	55	211	3	269	2	145	72	219	642	0
16:30 - 16:45	0	0	4	4	86	2	87	175	57	201	6	264	2	199	50	251	694	0
16:45 - 17:00	2	1	8	11	82	1	88	171	43	235	4	282	2	190	73	265	729	0
17:00 - 17:15	0	1	7	8	135	0	93	228	59	243	11	313	0	197	83	280	829	0
17:15 - 17:30	1	1	13	15	115	4	74	193	55	266	10	331	2	163	74	239	778	0
17:30 - 17:45	0	0	11	11	80	0	98	178	47	330	4	381	0	175	67	242	812	0
17:45 - 18:00	0	0	14	14	62	1	61	124	63	341	4	408	1	173	76	250	796	0
18:00 - 18:15	1	0	11	12	75	1	66	142	70	285	6	361	5	167	71	243	758	0
18:15 - 18:30	2	0	15	17	84	1	65	150	56	231	2	289	5	161	47	213	669	0
18:30 - 18:45	1	1	18	20	54	4	52	110	51	251	2	304	4	181	51	236	670	0
18:45 - 19:00	1	0	11	12	94	4	37	135	39	193	0	232	2	140	49	191	570	1
TOTAL	76	32	385	493	2920	89	2467	5476	2758	7927	220	10905	124	7509	3782	11415	28289	23
Trucks	0	0	1	1	44	1	47	92	30	75	0	105	0	76	50	126	324	1.1%
School Buses	0	0	0	0	24	0	7	31	3	16	0	19	0	26	27	53	103	0.4%

TOTAL AND PEAK HOUR VOLUME DIAGRAMS

Broad River Rd AT Greystone Blvd-Gas Station Date: 11/29/2016

12.0 HOUR TOTAL VOLUME
FROM 7:00 TO 15:00

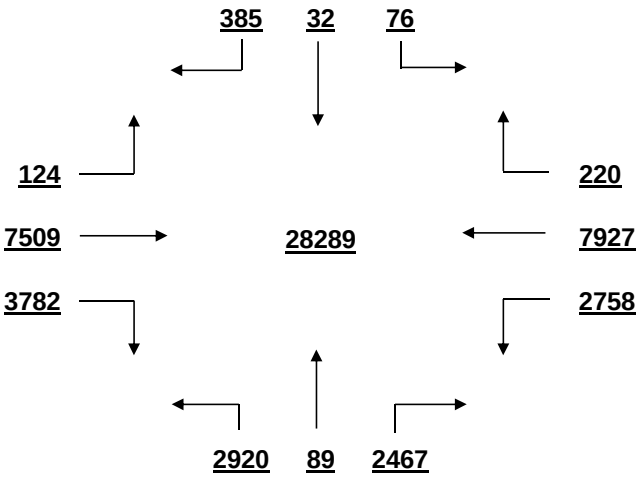

OVERALL PEAK HOUR VOLUME
FROM 17:00 TO 18:00

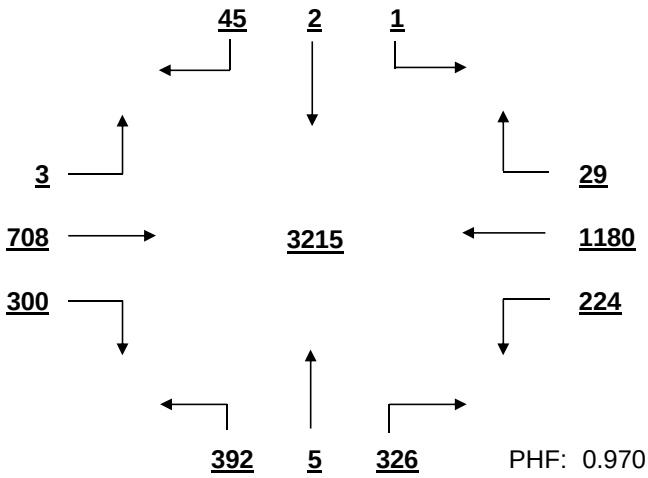

PHF: 0.970

AM PEAK HOUR VOLUME (0:00-10:45)
FROM 7:30 TO 8:30

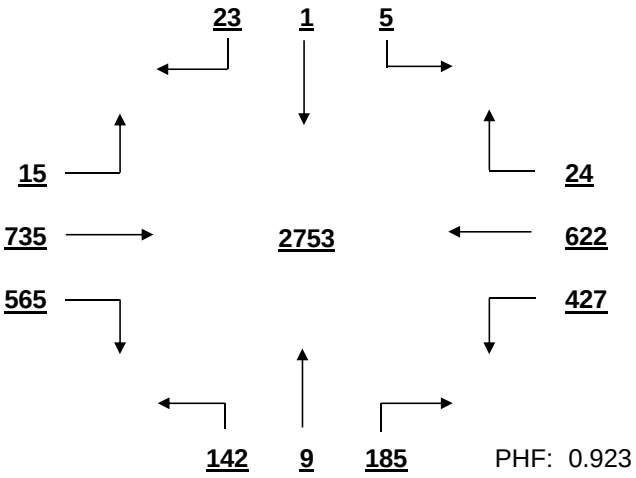

PHF: 0.923

PM PEAK HOUR VOLUME (14:15-23:45)
FROM 17:00 TO 18:00

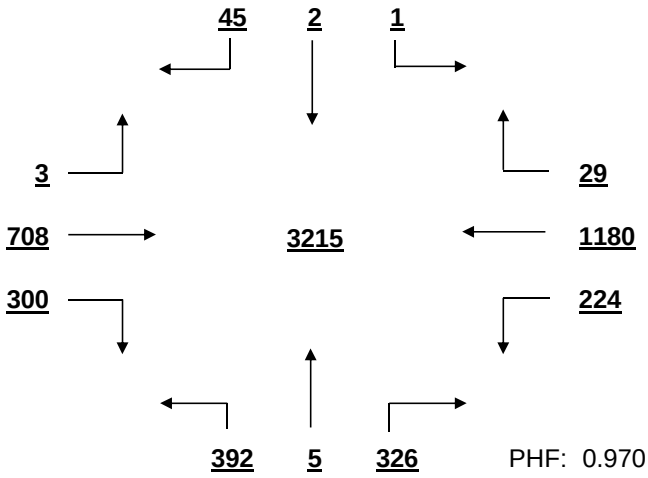

PHF: 0.970

MID-DAY PEAK HOUR VOLUME (11:00-14:00)
FROM 12:30 TO 13:30

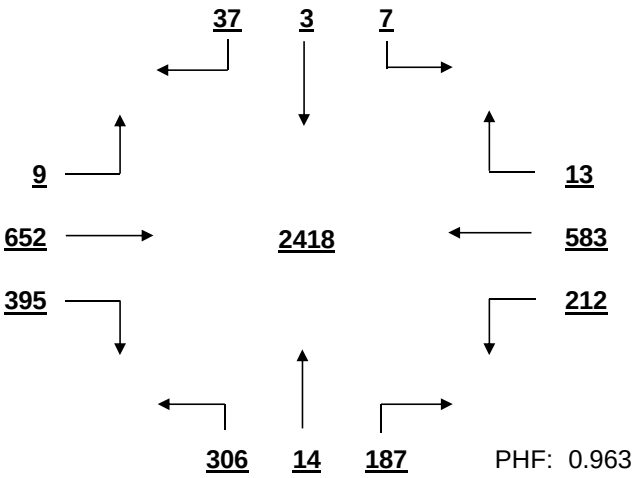

PHF: 0.963

OTHER HOUR VOLUME
FROM 7:00 TO 8:00

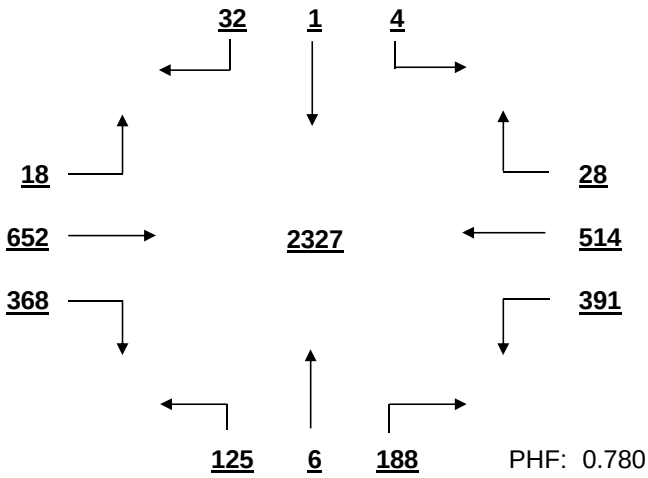

PHF: 0.780

SIGNAL WARRANT ANALYSIS

Broad River Rd AT Greystone Blvd-Gas Station Date: 11/29/2016

Minor Street Volume, percent of total = 21.1%
Percent of Left Turns from Minor Street = = 50.2%
Percent of Right Turns from Minor Street = 47.8%
Percent of Minor Street Right Turns to Remove from Warrant Analysis = 0%
WARRANT BASIS = **100%**

Warrant No. 1 - Vehicular Volume is met

Condition A - Minimum Vehicular Volume is met

Average Major Street % of Warrant				Average Minor Street % of Warrant			
1860.0	/ 600	=	310%	456.3	/ 200	=	228%

Hourly percent of warrant

	7:00 - 8:00	8:00 - 9:00	9:00 - 10:00	10:00 - 11:00	11:00 - 12:00	12:00 - 13:00	13:00 - 14:00	14:00 - 15:00	15:00 - 16:00	16:00 - 17:00	17:00 - 18:00	18:00 - 19:00
Major St.	329%	394%	252%	250%	244%	269%	304%	285%	300%	341%	407%	345%
Minor St.	160%	153%	167%	131%	191%	255%	248%	238%	236%	333%	362%	269%

Condition B - Interruption to Continuous Traffic is met

Average Major Street % of Warrant				Average Minor Street % of Warrant			
1860.0	/ 900	=	207%	456.3	/ 100	=	456%

Hourly percent of warrant

	7:00 - 8:00	8:00 - 9:00	9:00 - 10:00	10:00 - 11:00	11:00 - 12:00	12:00 - 13:00	13:00 - 14:00	14:00 - 15:00	15:00 - 16:00	16:00 - 17:00	17:00 - 18:00	18:00 - 19:00
Major St.	219%	263%	168%	167%	163%	180%	202%	190%	200%	227%	272%	230%
Minor St.	319%	306%	333%	261%	381%	509%	496%	475%	471%	665%	723%	537%

80% Combination of Conditions A & B is met

Warrant No. 2 - Four Hour Vehicular Volume is met

Hourly percent of warrant

	7:00 - 8:00	8:00 - 9:00	9:00 - 10:00	10:00 - 11:00	11:00 - 12:00	12:00 - 13:00	13:00 - 14:00	14:00 - 15:00	15:00 - 16:00	16:00 - 17:00	17:00 - 18:00	18:00 - 19:00
Minor St.	277%	266%	290%	227%	331%	443%	431%	413%	410%	578%	629%	467%

Warrant No. 3 - Peak Hour is met

Overall Peak Hour: 17:00 - 18:00 — Percent of warrant
Minor St. 482%

Higher Volume Side Street Peak Hour: 16:45 - 17:45 — Percent of warrant
Minor St. 513%

Warrant No. 4 - Pedestrian Volume. Pedestrian volume shown are minumum volumes assuming heavy major street traffic. If these volumes are met, warrant 4 requires further engineering analysis

S

Minimum 4 hour ped. volume crossing major street: 107

Minimum peak hour ped. volume crossing major street: 133

Number of pedestrians crossing major street

	7:00 - 8:00	8:00 - 9:00	9:00 - 10:00	10:00 - 11:00	11:00 - 12:00	12:00 - 13:00	13:00 - 14:00	14:00 - 15:00	15:00 - 16:00	16:00 - 17:00	17:00 - 18:00	18:00 - 19:00
Major t.	2	2	3	0	0	0	1	1	1	0	0	0

Warrant No. 7 - Crash Experience (Requires 3 criteria analysis by engineering)

Total Number: 0 From: 1/1/2005 to 1/1/2008
Accident Rate: 0.00 per million entering vehicles

Types of Accidents	No.	/	Avg.		No.	/	Avg.
Right Angle	0	/	0.0	Rear End	0	/	0.0
Lost Control	0	/	0.0	Side Swipe	0	/	0.0
Left Turn	0	/	0.0	Other	0	/	0.0

SOUTH CAROLINA DEPARTMENT OF TRANSPORTATION
DISTRICT 1
TRAFFIC ENGINEERING

County: Richland City: Columbia Date: 12/1/2016

Major Rt: Sunset Blvd * Not on State System Minor Rt: W. Hospital Dr-Sunset Ct Clear

Day of Week: Thursday Weather: Clear Office: Short Counts JMS

Type of Control: Signal Speed Limit (major st) 40

Direction of Minor Street: N-S Intersection ADT - 40670 (Calc)

Number of Lanes (major st)* 2 Number of Lanes (minor st)* 1

* Each Direction

INTERSECTION VOLUME SUMMARY

	From N W. Hospital Dr-Sun				From S W. Hospital Dr-Sun				From E Sunset Blvd				From W Sunset Blvd				Total	Total
	LT	STR	RT	TOT	LT	STR	RT	TOT	LT	STR	RT	TOT	LT	STR	RT	TOT	Vol	Peds
7:00 - 7:15	26	1	16	43	2	3	0	5	9	164	85	258	71	348	9	428	734	1
7:15 - 7:30	63	3	21	87	3	4	5	12	20	209	97	326	112	389	0	501	926	0
7:30 - 7:45	49	1	42	92	2	5	6	13	20	249	70	339	87	460	9	556	1000	0
7:45 - 8:00	45	3	22	70	1	6	6	13	17	266	103	386	83	0	23	106	575	0
8:00 - 8:15	59	3	21	83	2	5	4	11	16	258	70	344	74	363	9	446	884	0
8:15 - 8:30	35	1	0	36	1	4	7	12	18	242	71	331	96	424	16	536	915	1
8:30 - 8:45	45	0	28	73	2	4	4	10	17	242	68	327	67	369	7	443	853	0
8:45 - 9:00	49	0	29	78	2	6	7	15	14	223	52	289	38	309	4	351	733	2
9:00 - 9:15	46	2	28	76	6	3	7	16	7	206	40	253	37	272	4	313	658	2
9:15 - 9:30	47	7	27	81	4	5	13	22	11	230	51	292	41	321	6	368	763	0
9:30 - 9:45	33	7	32	72	7	6	7	20	9	240	29	278	38	301	10	349	719	0
9:45 - 10:00	44	1	24	69	7	0	7	14	11	216	38	265	30	278	2	310	658	0
10:00 - 10:15	53	1	27	81	0	4	0	4	10	225	29	264	34	253	6	293	642	0
10:15 - 10:30	68	0	32	100	3	1	14	18	9	228	45	282	34	305	7	346	746	0
10:30 - 10:45	61	0	22	83	7	1	9	17	12	294	47	353	33	291	2	326	779	0
10:45 - 11:00	54	3	37	94	2	3	8	13	10	225	29	264	28	278	4	310	681	0
11:00 - 11:15	59	3	26	88	5	4	8	17	16	271	43	330	32	264	3	299	734	2
11:15 - 11:30	68	3	34	105	7	0	10	17	12	240	38	290	27	261	3	291	703	1
11:30 - 11:45	66	4	42	112	8	1	17	26	15	296	41	352	25	298	5	328	818	0
11:45 - 12:00	69	7	40	116	6	3	11	20	14	255	53	322	31	311	4	346	804	2
12:00 - 12:15	74	4	44	122	11	3	13	27	21	286	43	350	25	309	2	336	835	1
12:15 - 12:30	69	4	51	124	20	6	17	43	16	299	49	364	38	0	10	48	579	3
12:30 - 12:45	59	2	43	104	11	3	14	28	13	309	53	375	30	311	4	345	852	0
12:45 - 13:00	43	3	34	80	13	2	21	36	16	300	56	372	44	295	6	345	833	3
13:00 - 13:15	58	4	33	95	13	2	11	26	19	319	46	384	35	274	1	310	815	0
13:15 - 13:30	43	4	23	70	7	4	23	34	16	316	57	389	35	283	4	322	815	0
13:30 - 13:45	48	7	37	92	12	6	5	23	9	297	53	359	36	277	12	325	799	0
13:45 - 14:00	55	2	25	82	7	3	9	19	18	319	44	381	30	266	4	300	782	1
14:00 - 14:15	54	1	37	92	5	5	20	30	12	338	51	401	29	261	1	291	814	0
14:15 - 14:30	37	1	37	75	3	4	14	21	12	306	44	362	49	273	0	322	780	1
14:30 - 14:45	63	0	31	94	9	1	7	17	15	317	44	376	20	281	3	304	791	1
14:45 - 15:00	93	4	79	176	6	4	11	21	7	332	54	393	29	287	2	318	908	0
15:00 - 15:15	53	0	61	114	10	6	11	27	7	339	43	389	24	302	3	329	859	1
15:15 - 15:30	88	0	64	152	8	3	15	26	14	316	44	374	22	246	2	270	822	0
15:30 - 15:45	108	7	76	191	16	7	21	44	14	368	31	413	16	272	5	293	941	0
15:45 - 16:00	80	2	69	151	11	5	15	31	17	362	57	436	31	271	5	307	925	0
16:00 - 16:15	97	4	97	198	7	4	14	25	12	368	41	421	17	257	3	277	921	0
16:15 - 16:30	85	0	81	166	13	6	23	42	10	414	46	470	12	278	4	294	972	1
16:30 - 16:45	106	1	115	222	15	4	18	37	7	402	29	438	29	303	0	332	1029	0
16:45 - 17:00	97	3	84	184	12	6	13	31	8	433	49	490	12	285	2	299	1004	3
17:00 - 17:15	118	1	98	217	15	5	13	33	11	368	36	415	26	350	1	377	1042	1
17:15 - 17:30	96	2	56	154	16	5	18	39	13	379	46	438	29	331	1	361	992	0
17:30 - 17:45	108	0	66	174	3	4	11	18	3	348	36	387	26	314	0	340	919	0
17:45 - 18:00	56	1	45	102	15	4	9	28	10	344	49	403	23	317	1	341	874	1
18:00 - 18:15	56	3	38	97	10	2	9	21	3	352	32	387	19	272	1	292	797	2
18:15 - 18:30	43	0	24	67	9	1	3	13	9	324	31	364	19	245	1	265	709	0
18:30 - 18:45	37	1	29	67	7	0	3	10	5	277	38	320	35	196	0	231	628	0
18:45 - 19:00	23	0	20	43	5	0	6	11	8	218	34	260	20	151	0	171	485	0
TOTAL	2986	111	2047	5144	366	173	517	1056	592	14129	2335	17056	1778	13602	211	15591	38847	30
Trucks	53	4	17	74	2	1	6	9	4	486	48	538	15	505	3	523	1144	2.9%
School Buses	3	0	3	6	0	0	0	0	0	9	5	14	1	15	0	16	36	0.1%

TOTAL AND PEAK HOUR VOLUME DIAGRAMS

Sunset Blvd AT W. Hospital Dr-Sunset Ct Date: 12/1/2016

12.0 HOUR TOTAL VOLUME
FROM 7:00 TO 15:00

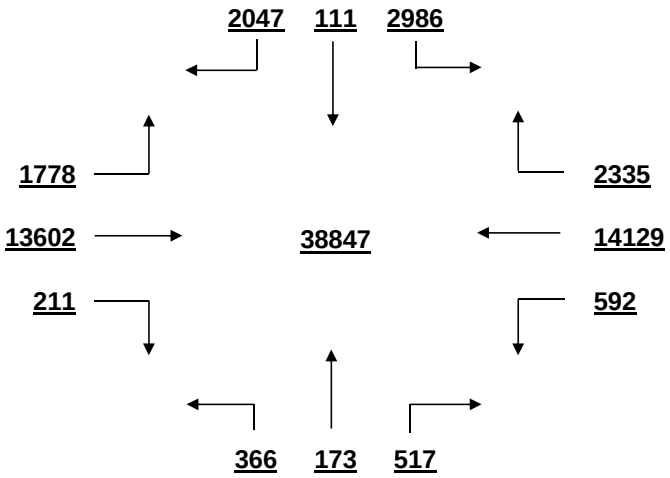

OVERALL PEAK HOUR VOLUME
FROM 16:30 TO 17:30

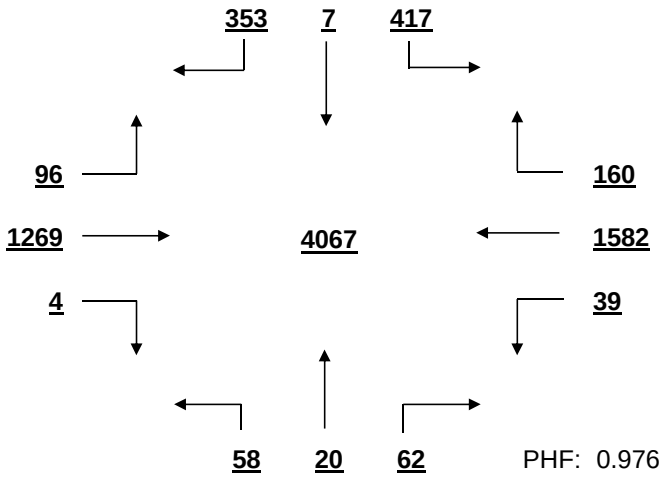

PHF: 0.976

AM PEAK HOUR VOLUME (0:00-10:45)
FROM 7:15 TO 8:15

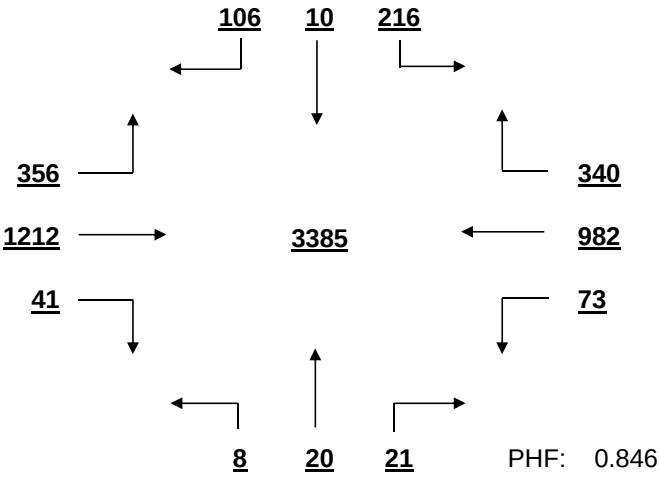

PHF: 0.846

PM PEAK HOUR VOLUME (14:15-23:45)
FROM 16:30 TO 17:30

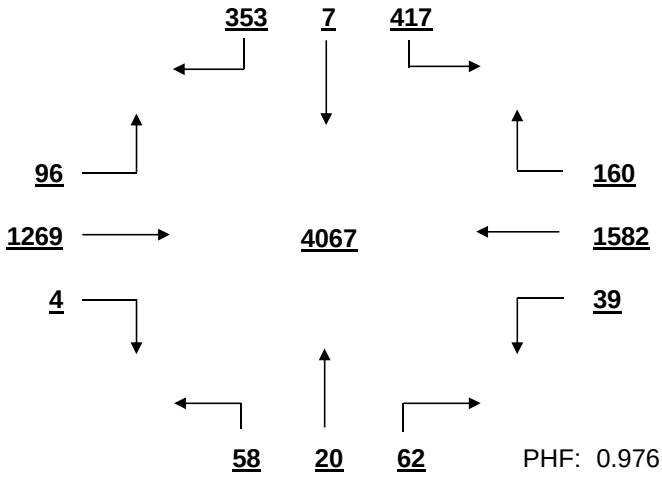

PHF: 0.976

MID-DAY PEAK HOUR VOLUME (11:00-14:00)
FROM 12:30 TO 13:30

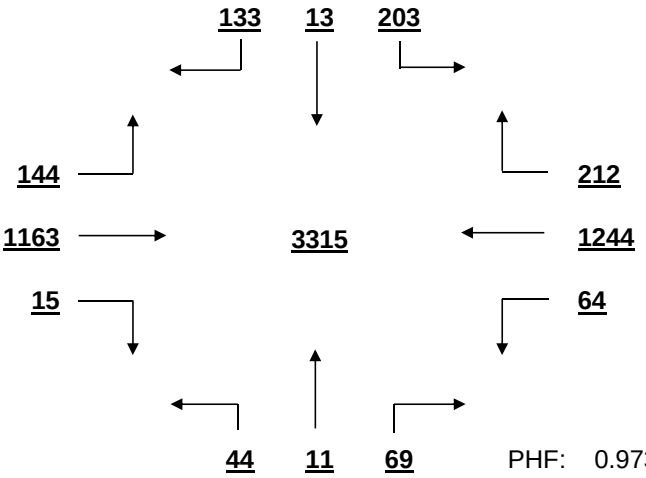

PHF: 0.973

OTHER HOUR VOLUME
FROM 7:00 TO 8:00

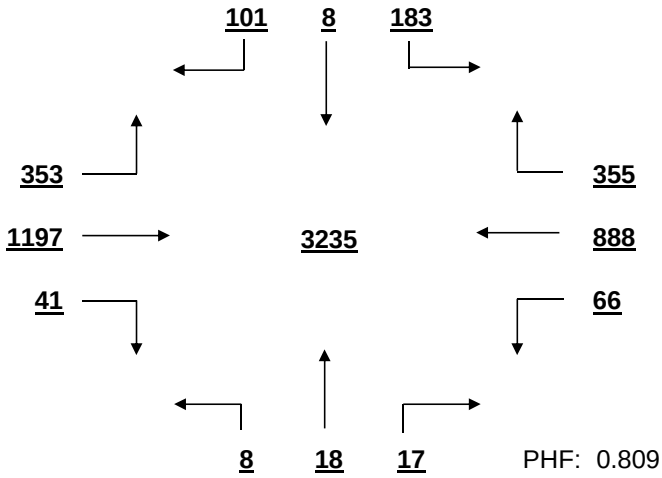

PHF: 0.809

SIGNAL WARRANT ANALYSIS

Sunset Blvd AT W. Hospital Dr-Sunset Ct Date: 12/1/2016

Minor Street Volume, percent of total = 16.0%
Percent of Left Turns from Minor Street = = 54.1%
Percent of Right Turns from Minor Street = 41.4%
Percent of Minor Street Right Turns to Remove from Warrant Analysis = 0%
WARRANT BASIS = **100%**

Warrant No. 1 - Vehicular Volume is met

Condition A - Minimum Vehicular Volume is met

Average Major Street % of Warrant				Average Minor Street % of Warrant			
2720.6	/	600	= 453%	428.7	/	150	= 286%

Hourly percent of warrant

	7:00 - 8:00	8:00 - 9:00	9:00 - 10:00	10:00 - 11:00	11:00 - 12:00	12:00 - 13:00	13:00 - 14:00	14:00 - 15:00	15:00 - 16:00	16:00 - 17:00	17:00 - 18:00	18:00 - 19:00
Major St.	483%	511%	405%	406%	426%	423%	462%	461%	469%	504%	510%	382%
Minor St.	195%	180%	199%	239%	281%	287%	226%	291%	405%	513%	431%	183%

Condition B - Interruption to Continuous Traffic is met

Average Major Street % of Warrant				Average Minor Street % of Warrant			
2720.6	/	900	= 302%	428.7	/	75	= 572%

Hourly percent of warrant

	7:00 - 8:00	8:00 - 9:00	9:00 - 10:00	10:00 - 11:00	11:00 - 12:00	12:00 - 13:00	13:00 - 14:00	14:00 - 15:00	15:00 - 16:00	16:00 - 17:00	17:00 - 18:00	18:00 - 19:00
Major St.	322%	341%	270%	271%	284%	282%	308%	307%	312%	336%	340%	254%
Minor St.	389%	360%	397%	477%	561%	573%	452%	583%	811%	1027%	863%	365%

80% Combination of Conditions A & B is met

Warrant No. 2 - Four Hour Vehicular Volume is met

Hourly percent of warrant

	7:00 - 8:00	8:00 - 9:00	9:00 - 10:00	10:00 - 11:00	11:00 - 12:00	12:00 - 13:00	13:00 - 14:00	14:00 - 15:00	15:00 - 16:00	16:00 - 17:00	17:00 - 18:00	18:00 - 19:00
Minor St.	365%	338%	373%	448%	526%	538%	424%	546%	760%	963%	809%	343%

Warrant No. 3 - Peak Hour is met

Percent of warrant
Overall Peak Hour: 16:30 - 17:30
Minor St. 777%

Percent of warrant
Higher Volume Side Street Peak Hour: 16:15 - 17:15
Minor St. 789%

Warrant No. 4 - Pedestrian Volume. Pedestrian volume shown are minumum volumes assuming heavy major street traffic. If these volumes are met, warrant 4 requires further engineering analysis

S

Minimum 4 hour ped. volume crossing major street: 107

Minimum peak hour ped. volume crossing major street: 133

Number of pedestrians crossing major street

	7:00 - 8:00	8:00 - 9:00	9:00 - 10:00	10:00 - 11:00	11:00 - 12:00	12:00 - 13:00	13:00 - 14:00	14:00 - 15:00	15:00 - 16:00	16:00 - 17:00	17:00 - 18:00	18:00 - 19:00
Major t.	0	2	1	0	2	4	0	0	0	0	0	1

Warrant No. 7 - Crash Experience (Requires 3 criteria analysis by engineering)

Total Number: 0 From: 1/1/2005 to 1/1/2008
Accident Rate: 0.00 per million entering vehicles

Types of Accidents	No.	/	Avg.		No.	/	Avg.
Right Angle	0	/	0.0	Rear End	0	/	0.0
Lost Control	0	/	0.0	Side Swipe	0	/	0.0
Left Turn	0	/	0.0	Other	0	/	0.0

SOUTH CAROLINA DEPARTMENT OF TRANSPORTATION
DISTRICT 1
TRAFFIC ENGINEERING

County: Richland City: Columbia Date: 12/1/2016

Major Rt: Sunset Blvd * Not on State System Minor Rt: E. Hospital Dr-Harbor Dr Clear

Day of Week: Thursday Weather: Clear Office: Short Counts JMS

Type of Control: Signal Speed Limit (major st) 40

Direction of Minor Street: N-S Intersection ADT - 40930 (Calc)

Number of Lanes (major st)* 2 Number of Lanes (minor st)* 1

* Each Direction

INTERSECTION VOLUME SUMMARY

	From N E. Hospital Dr-Har				From S E. Hospital Dr-Har				From E Sunset Blvd				From W Sunset Blvd				Total	Total
	LT	STR	RT	TOT	LT	STR	RT	TOT	LT	STR	RT	TOT	LT	STR	RT	TOT	Vol	Peds
7:00 - 7:15	23	0	9	32	6	12	26	44	19	229	89	337	21	329	10	360	773	0
7:15 - 7:30	37	2	8	47	17	9	39	65	15	317	84	416	25	414	18	457	985	0
7:30 - 7:45	52	3	10	65	8	9	44	61	26	341	86	453	28	423	21	472	1051	0
7:45 - 8:00	39	2	6	47	13	9	57	79	26	347	89	462	17	430	19	466	1054	0
8:00 - 8:15	43	4	18	65	17	6	53	76	29	301	74	404	40	352	13	405	950	1
8:15 - 8:30	31	2	0	33	11	7	55	73	28	343	79	450	37	438	7	482	1038	0
8:30 - 8:45	31	3	18	52	12	6	29	47	23	279	98	400	30	339	17	386	885	0
8:45 - 9:00	38	1	17	56	5	5	27	37	23	273	70	366	31	333	18	382	841	0
9:00 - 9:15	44	4	13	61	13	4	17	34	29	234	65	328	23	287	16	326	749	0
9:15 - 9:30	41	4	21	66	10	3	30	43	20	247	67	334	34	304	18	356	799	0
9:30 - 9:45	30	7	16	53	16	4	27	47	15	247	71	333	35	290	12	337	770	0
9:45 - 10:00	56	6	31	93	18	2	32	52	23	247	72	342	19	292	16	327	814	0
10:00 - 10:15	51	2	28	81	0	5	0	5	17	223	55	295	25	283	15	323	704	4
10:15 - 10:30	54	1	13	68	13	6	21	40	18	260	74	352	31	298	17	346	806	2
10:30 - 10:45	48	2	30	80	16	11	44	71	21	277	50	348	26	286	21	333	832	0
10:45 - 11:00	48	8	27	83	10	3	17	30	20	259	71	350	36	304	18	358	821	3
11:00 - 11:15	54	4	34	92	13	5	26	44	18	291	55	364	19	318	16	353	853	2
11:15 - 11:30	40	7	26	73	14	3	20	37	18	256	63	337	13	303	15	331	778	2
11:30 - 11:45	71	2	44	117	17	5	24	46	27	278	42	347	21	340	17	378	888	1
11:45 - 12:00	78	1	40	119	12	8	25	45	23	254	58	335	13	344	17	374	873	2
12:00 - 12:15	76	1	31	108	18	3	27	48	20	297	48	365	20	353	16	389	910	0
12:15 - 12:30	61	6	22	89	23	7	28	58	14	309	68	391	27	347	22	396	934	7
12:30 - 12:45	65	2	28	95	16	4	22	42	28	330	64	422	18	346	14	378	937	0
12:45 - 13:00	47	4	21	72	14	5	23	42	35	342	69	446	29	295	19	343	903	0
13:00 - 13:15	36	4	25	65	13	5	28	46	23	342	73	438	34	297	23	354	903	0
13:15 - 13:30	44	4	37	85	14	6	16	36	22	330	75	427	31	315	10	356	904	0
13:30 - 13:45	68	2	33	103	12	9	29	50	12	330	57	399	26	288	16	330	882	0
13:45 - 14:00	50	1	27	78	16	8	24	48	30	348	75	453	21	283	16	320	899	6
14:00 - 14:15	61	4	34	99	16	5	34	55	20	356	72	448	16	332	14	362	964	0
14:15 - 14:30	68	4	34	106	6	3	30	39	27	321	52	400	26	269	23	318	863	1
14:30 - 14:45	69	3	40	112	17	5	27	49	19	331	53	403	20	308	15	343	907	0
14:45 - 15:00	75	3	28	106	22	2	30	54	17	329	55	401	26	321	14	361	922	0
15:00 - 15:15	81	6	28	115	11	1	35	47	34	336	53	423	10	340	12	362	947	1
15:15 - 15:30	84	0	27	111	13	3	25	41	36	321	65	422	16	324	9	349	923	0
15:30 - 15:45	81	2	28	111	18	3	33	54	28	357	48	433	9	358	19	386	984	0
15:45 - 16:00	75	5	35	115	23	4	28	55	26	345	38	409	17	339	18	374	953	0
16:00 - 16:15	72	14	31	117	14	4	36	54	17	342	41	400	9	335	12	356	927	1
16:15 - 16:30	74	9	38	121	16	2	28	46	23	379	43	445	18	348	14	380	992	0
16:30 - 16:45	81	3	33	117	9	1	28	38	25	347	39	411	12	368	15	395	961	0
16:45 - 17:00	70	8	33	111	8	3	41	52	33	402	38	473	10	380	19	409	1045	0
17:00 - 17:15	86	4	21	111	18	2	23	43	25	350	36	411	8	405	25	438	1003	0
17:15 - 17:30	72	9	20	101	16	3	23	42	43	379	30	452	11	426	22	459	1054	0
17:30 - 17:45	63	6	20	89	12	2	24	38	43	362	39	444	7	393	17	417	988	0
17:45 - 18:00	31	2	9	42	10	4	19	33	31	358	42	431	10	346	19	375	881	0
18:00 - 18:15	43	8	15	66	14	5	20	39	30	303	57	390	7	301	17	325	820	0
18:15 - 18:30	43	0	18	61	14	6	30	50	33	326	36	395	12	274	15	301	807	1
18:30 - 18:45	44	1	14	59	12	2	16	30	23	292	56	371	14	218	9	241	701	2
18:45 - 19:00	33	0	17	50	9	5	20	34	14	239	41	294	8	172	4	184	562	0
TOTAL	2662	180	1156	3998	645	234	1360	2239	1169	14906	2875	18950	996	15788	769	17553	42740	36
Trucks	19	4	19	42	19	2	55	76	47	493	16	556	14	500	21	535	1209	2.8%
School Buses	2	0	0	2	2	0	15	17	9	24	1	34	0	27	3	30	83	0.2%

TOTAL AND PEAK HOUR VOLUME DIAGRAMS

Sunset Blvd AT E. Hospital Dr-Harbor Dr Date: 12/1/2016

12.0 HOUR TOTAL VOLUME
FROM 7:00 TO 15:00

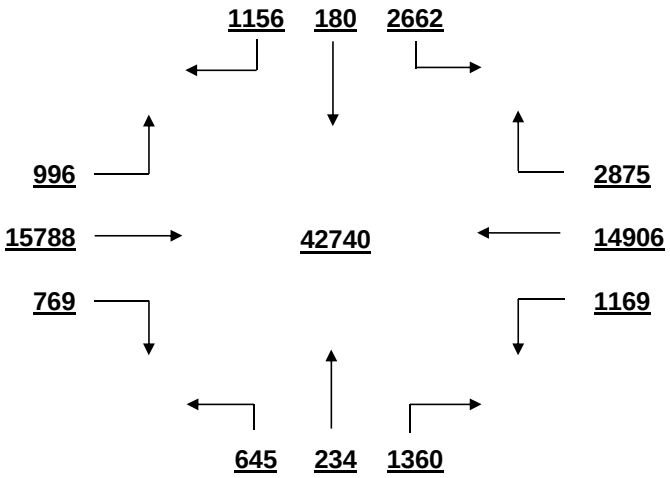

OVERALL PEAK HOUR VOLUME
FROM 7:30 TO 8:30

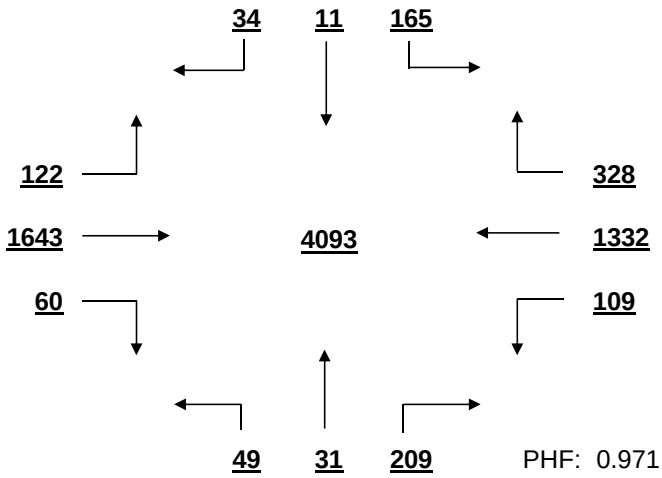

PHF: 0.971

AM PEAK HOUR VOLUME (0:00-10:45)
FROM 7:30 TO 8:30

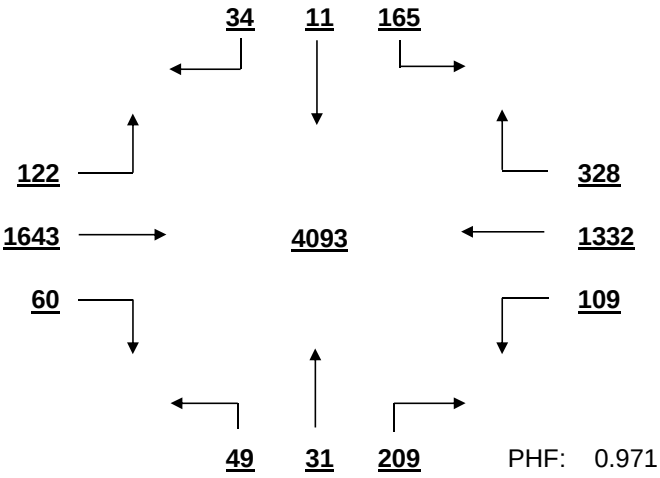

PHF: 0.971

PM PEAK HOUR VOLUME (14:15-23:45)
FROM 16:45 TO 17:45

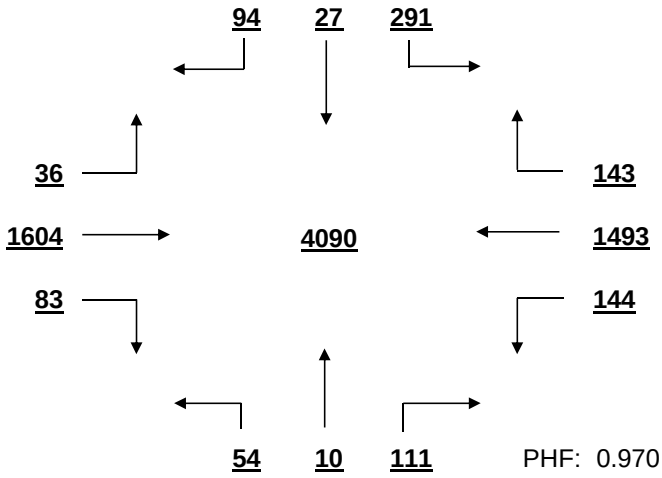

PHF: 0.970

MID-DAY PEAK HOUR VOLUME (11:00-14:00)
FROM 12:00 TO 13:00

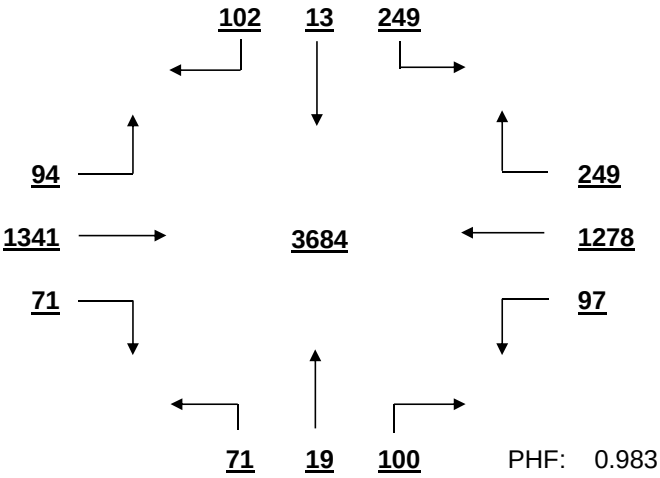

PHF: 0.983

OTHER HOUR VOLUME
FROM 7:00 TO 8:00

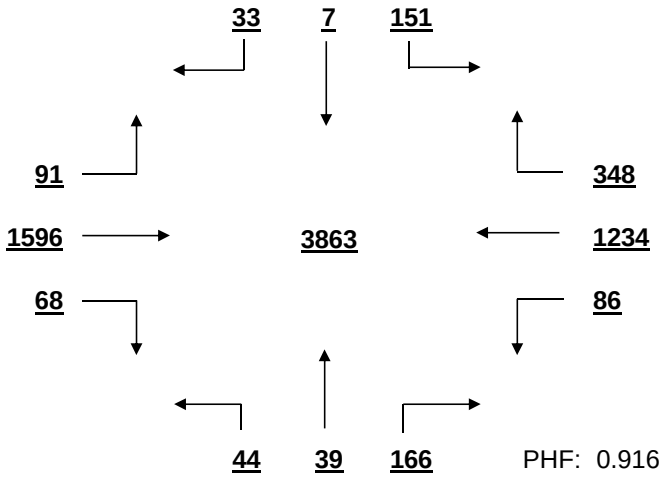

PHF: 0.916

SIGNAL WARRANT ANALYSIS

Sunset Blvd AT E. Hospital Dr-Harbor Dr Date: 12/1/2016

Minor Street Volume, percent of total = 14.6%
Percent of Left Turns from Minor Street = = 53.0%
Percent of Right Turns from Minor Street = 40.3%
Percent of Minor Street Right Turns to Remove from Warrant Analysis = 0%
WARRANT BASIS = **100%**

Warrant No. 1 - Vehicular Volume is met

Condition A - Minimum Vehicular Volume is met

Average Major Street % of Warrant				Average Minor Street % of Warrant			
3041.9	/ 600	=	507%	333.2	/ 150	=	222%

Hourly percent of warrant

	7:00-8:00	8:00-9:00	9:00-10:00	10:00-11:00	11:00-12:00	12:00-13:00	13:00-14:00	14:00-15:00	15:00-16:00	16:00-17:00	17:00-18:00	18:00-19:00
Major St.	571%	546%	447%	451%	470%	522%	513%	506%	526%	545%	571%	417%
Minor St.	166%	155%	182%	208%	267%	243%	221%	282%	301%	311%	229%	157%

Condition B - Interruption to Continuous Traffic is met

Average Major Street % of Warrant				Average Minor Street % of Warrant			
3041.9	/ 900	=	338%	333.2	/ 75	=	444%

Hourly percent of warrant

	7:00-8:00	8:00-9:00	9:00-10:00	10:00-11:00	11:00-12:00	12:00-13:00	13:00-14:00	14:00-15:00	15:00-16:00	16:00-17:00	17:00-18:00	18:00-19:00
Major St.	380%	364%	298%	301%	313%	348%	342%	337%	351%	363%	381%	278%
Minor St.	332%	311%	364%	416%	535%	485%	441%	564%	603%	621%	457%	315%

80% Combination of Conditions A & B is met

Warrant No. 2 - Four Hour Vehicular Volume is met

Hourly percent of warrant

	7:00-8:00	8:00-9:00	9:00-10:00	10:00-11:00	11:00-12:00	12:00-13:00	13:00-14:00	14:00-15:00	15:00-16:00	16:00-17:00	17:00-18:00	18:00-19:00
Minor St.	311%	291%	341%	390%	501%	455%	414%	529%	565%	583%	429%	295%

Warrant No. 3 - Peak Hour is met

		Percent of warrant			Percent of warrant
Overall Peak Hour:	7:30-8:30		Higher Volume Side Street Peak Hour:	15:45-16:45	
Minor St.		289%	Minor St.		470%

Warrant No. 4 - Pedestrian Volume. Pedestrian volume shown are minumum volumes assuming heavy major street traffic. If these volumes are met, warrant 4 requires further engineering analysis

S

Minimum 4 hour ped. volume crossing major street: 107

Minimum peak hour ped. volume crossing major street: 133

Number of pedestrians crossing major street

	7:00-8:00	8:00-9:00	9:00-10:00	10:00-11:00	11:00-12:00	12:00-13:00	13:00-14:00	14:00-15:00	15:00-16:00	16:00-17:00	17:00-18:00	18:00-19:00
Major t.	0	0	0	5	4	4	3	0	0	0	0	1

Warrant No. 7 - Crash Experience (Requires 3 criteria analysis by engineering)

Total Number: 0 From: 1/1/2005 to 1/1/2008

Accident Rate: 0.00 per million entering vehicles

Types of Accidents	No.	/	Avg.		No.	/	Avg.
Right Angle	0	/	0.0	Rear End	0	/	0.0
Lost Control	0	/	0.0	Side Swipe	0	/	0.0
Left Turn	0	/	0.0	Other	0	/	0.0

SOUTH CAROLINA DEPARTMENT OF TRANSPORTATION
DISTRICT 1
TRAFFIC ENGINEERING

County: Richland City: Columbia Date: 12/1/2016

Major Rt: Sunset Blvd * Not on State System Minor Rt: McSwain Dr-Chris Dr Clear

Day of Week: Thursday Weather: Clear Office: Short Counts JMS

Type of Control: Signal Speed Limit (major st) 40

Direction of Minor Street: N-S Intersection ADT - 34870 (Calc)

Number of Lanes (major st)* 2 Number of Lanes (minor st)* 1

* Each Direction

INTERSECTION VOLUME SUMMARY

	From N McSwain Dr-Chris D				From S McSwain Dr-Chris D				From E Sunset Blvd				From W Sunset Blvd				Total	Total
	LT	STR	RT	TOT	LT	STR	RT	TOT	LT	STR	RT	TOT	LT	STR	RT	TOT	Vol	Peds
7:00 - 7:15	12	7	23	42	42	2	13	57	15	146	3	164	13	280	24	317	580	2
7:15 - 7:30	6	7	21	34	30	3	12	45	13	220	2	235	18	350	0	368	682	0
7:30 - 7:45	13	2	28	43	48	4	21	73	20	250	7	277	14	416	42	472	865	1
7:45 - 8:00	9	3	22	34	45	6	19	70	14	264	6	284	31	0	49	80	468	0
8:00 - 8:15	7	4	14	25	41	8	16	65	17	218	4	239	33	371	35	439	768	1
8:15 - 8:30	7	6	0	13	53	3	13	69	8	246	8	262	28	372	52	452	796	0
8:30 - 8:45	5	1	32	38	39	3	17	59	5	210	6	221	37	320	44	401	719	3
8:45 - 9:00	5	0	26	31	46	4	15	65	13	168	9	190	22	297	48	367	653	1
9:00 - 9:15	5	3	19	27	41	2	11	54	9	176	4	189	25	239	39	303	573	2
9:15 - 9:30	5	3	18	26	49	6	18	73	15	183	4	202	14	250	36	300	601	0
9:30 - 9:45	9	5	15	29	43	2	14	59	11	234	5	250	10	244	36	290	628	0
9:45 - 10:00	2	2	10	14	48	2	12	62	13	188	5	206	18	269	29	316	598	3
10:00 - 10:15	4	6	12	22	0	5	0	5	14	192	8	214	16	214	30	260	501	0
10:15 - 10:30	8	3	14	25	45	1	11	57	12	211	10	233	22	258	44	324	639	0
10:30 - 10:45	12	5	20	37	66	8	16	90	17	229	8	254	20	241	27	288	669	1
10:45 - 11:00	12	3	19	34	40	4	20	64	9	212	7	228	12	255	33	300	626	2
11:00 - 11:15	14	5	44	63	30	3	23	56	10	213	3	226	14	258	34	306	651	1
11:15 - 11:30	8	4	22	34	29	1	24	54	14	272	6	292	18	299	36	353	733	1
11:30 - 11:45	7	6	15	28	42	4	20	66	6	269	5	280	19	313	36	368	742	0
11:45 - 12:00	14	3	21	38	47	4	19	70	14	239	2	255	20	312	40	372	735	1
12:00 - 12:15	8	3	19	30	45	4	21	70	14	296	6	316	26	358	38	422	838	3
12:15 - 12:30	9	2	17	28	37	6	15	58	13	292	7	312	20	0	28	48	446	0
12:30 - 12:45	14	6	15	35	56	1	31	88	18	348	5	371	25	359	30	414	908	2
12:45 - 13:00	7	7	20	34	58	6	38	102	18	345	6	369	19	295	41	355	860	7
13:00 - 13:15	6	4	16	26	49	4	25	78	32	313	5	350	24	288	42	354	808	1
13:15 - 13:30	6	3	17	26	47	5	19	71	20	337	11	368	25	281	41	347	812	2
13:30 - 13:45	3	9	18	30	44	1	13	58	22	322	15	359	24	252	35	311	758	3
13:45 - 14:00	8	2	19	29	49	6	14	69	16	320	13	349	27	253	32	312	759	0
14:00 - 14:15	6	2	22	30	44	6	17	67	17	298	6	321	19	297	39	355	773	0
14:15 - 14:30	6	2	19	27	38	2	13	53	18	305	5	328	27	263	0	290	698	1
14:30 - 14:45	3	4	16	23	37	5	17	59	16	300	3	319	21	249	41	311	712	0
14:45 - 15:00	7	7	18	32	46	3	30	79	22	339	4	365	20	287	31	338	814	3
15:00 - 15:15	9	5	33	47	40	4	9	53	12	322	9	343	20	287	35	342	785	0
15:15 - 15:30	11	0	15	26	39	5	23	67	18	305	7	330	23	300	29	352	775	0
15:30 - 15:45	11	3	20	34	36	5	14	55	12	340	8	360	24	320	33	377	826	1
15:45 - 16:00	6	3	21	30	38	9	20	67	16	322	8	346	18	332	27	377	820	1
16:00 - 16:15	9	4	35	48	43	2	16	61	13	363	5	381	25	267	34	326	816	1
16:15 - 16:30	12	4	31	47	31	4	15	50	13	354	3	370	16	312	26	354	821	3
16:30 - 16:45	2	3	22	27	55	4	32	91	16	356	10	382	17	291	31	339	839	0
16:45 - 17:00	7	6	29	42	35	1	18	54	18	366	9	393	20	330	32	382	871	0
17:00 - 17:15	12	8	38	58	60	4	23	87	15	368	7	390	31	308	23	362	897	2
17:15 - 17:30	13	5	21	39	35	5	24	64	20	360	8	388	24	333	32	389	880	6
17:30 - 17:45	8	3	19	30	36	0	26	62	17	333	5	355	10	307	28	345	792	1
17:45 - 18:00	4	8	18	30	29	1	20	50	15	302	7	324	17	321	21	359	763	1
18:00 - 18:15	3	2	17	22	45	3	20	68	11	310	8	329	18	290	25	333	752	0
18:15 - 18:30	6	0	11	17	18	3	19	40	16	295	4	315	17	273	13	303	675	3
18:30 - 18:45	3	3	13	19	29	6	11	46	15	263	3	281	12	221	16	249	595	6
18:45 - 19:00	7	0	8	15	21	0	16	37	12	230	7	249	15	198	17	230	531	11
TOTAL	370	186	962	1518	1964	180	873	3017	714	13344	306	14364	988	13430	1534	15952	34851	77
Trucks	3	1	14	18	105	1	23	129	11	278	5	294	9	252	125	386	827	2.4%
School Buses	0	1	1	2	0	1	1	2	0	22	2	24	0	25	3	28	56	0.2%

TOTAL AND PEAK HOUR VOLUME DIAGRAMS

Sunset Blvd AT McSwain Dr-Chris Dr Date: 12/1/2016

12.0 HOUR TOTAL VOLUME
FROM 7:00 TO 15:00

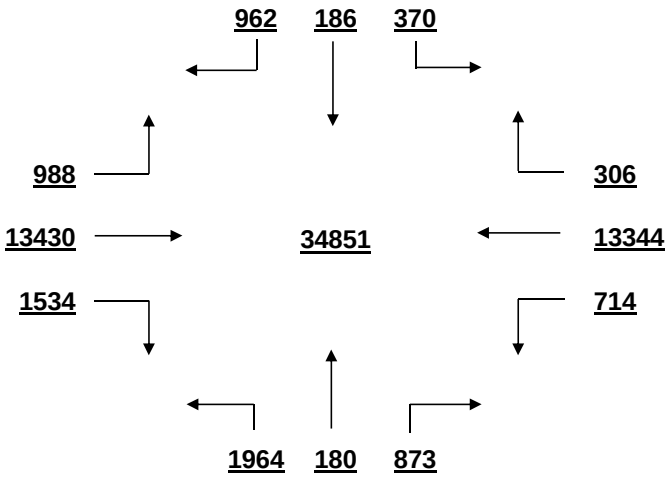

OVERALL PEAK HOUR VOLUME
FROM 16:30 TO 17:30

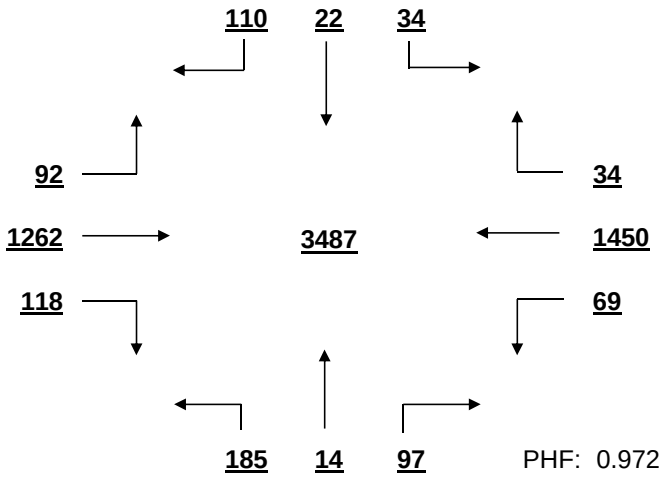

PHF: 0.972

AM PEAK HOUR VOLUME (0:00-10:45)
FROM 8:00 TO 9:00

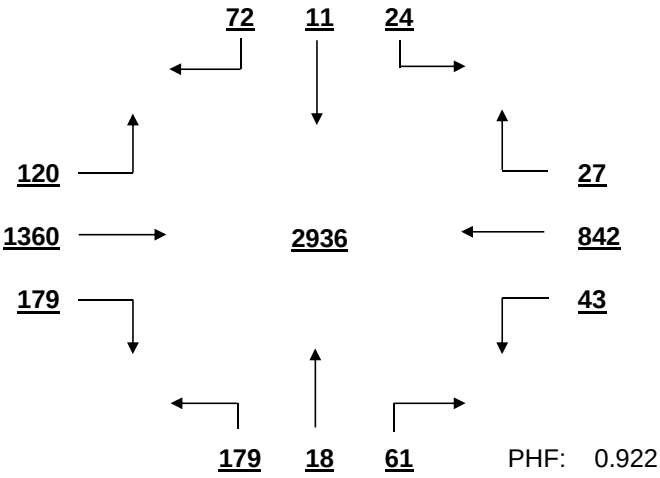

PHF: 0.922

PM PEAK HOUR VOLUME (14:15-23:45)
FROM 16:30 TO 17:30

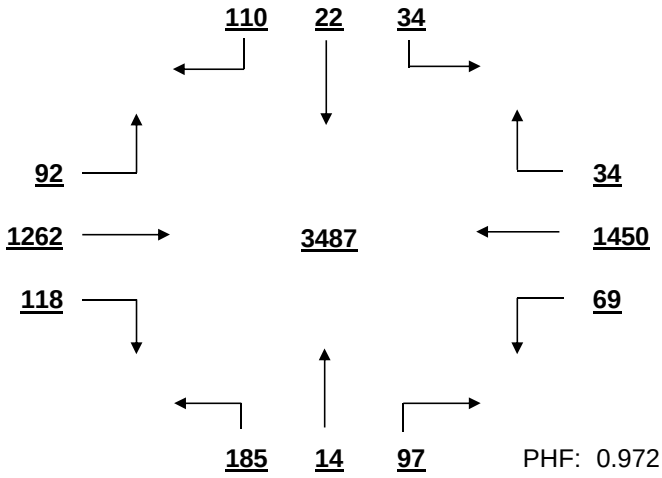

PHF: 0.972

MID-DAY PEAK HOUR VOLUME (11:00-14:00)
FROM 12:30 TO 13:30

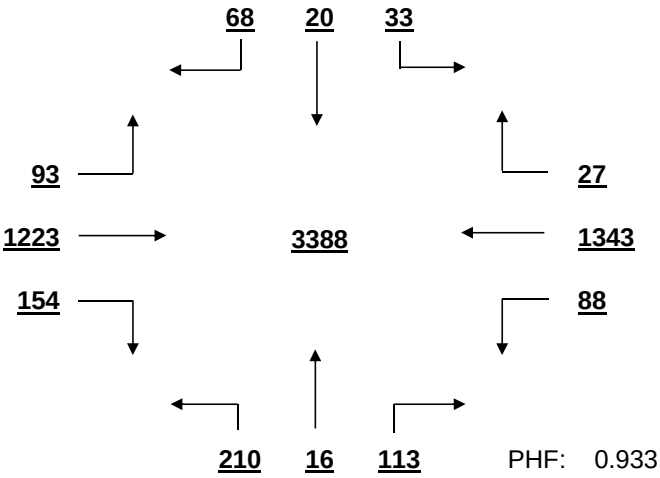

PHF: 0.933

OTHER HOUR VOLUME
FROM 7:00 TO 8:00

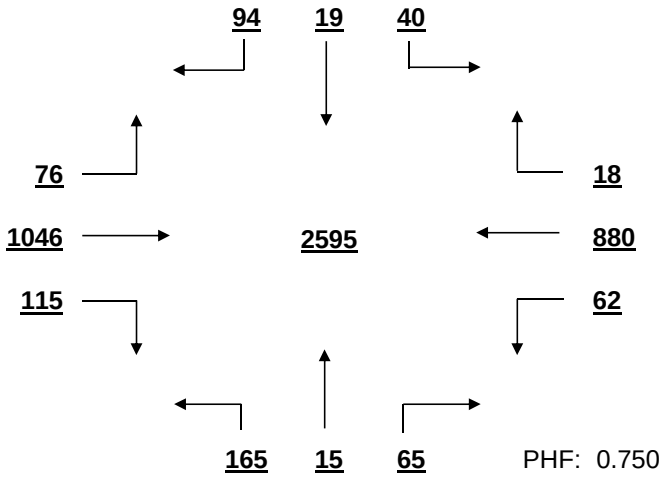

PHF: 0.750

SIGNAL WARRANT ANALYSIS

Sunset Blvd AT McSwain Dr-Chris Dr Date: 12/1/2016

Minor Street Volume, percent of total = 13.0%
Percent of Left Turns from Minor Street = 51.5%
Percent of Right Turns from Minor Street = 40.5%
Percent of Minor Street Right Turns to Remove from Warrant Analysis = 0%
WARRANT BASIS = **100%**

Warrant No. 1 - Vehicular Volume is met

Condition A - Minimum Vehicular Volume is met

Average Major Street % of Warrant				Average Minor Street % of Warrant			
2526.3	/ 600	=	421%	251.4	/ 150	=	168%

Hourly percent of warrant

	7:00 - 8:00	8:00 - 9:00	9:00 - 10:00	10:00 - 11:00	11:00 - 12:00	12:00 - 13:00	13:00 - 14:00	14:00 - 15:00	15:00 - 16:00	16:00 - 17:00	17:00 - 18:00	18:00 - 19:00
Major St.	366%	429%	343%	350%	409%	435%	458%	438%	471%	488%	485%	382%
Minor St.	163%	172%	165%	144%	164%	212%	184%	172%	161%	171%	175%	127%

Condition B - Interruption to Continuous Traffic is met

Average Major Street % of Warrant				Average Minor Street % of Warrant			
2526.3	/ 900	=	281%	251.4	/ 75	=	335%

Hourly percent of warrant

	7:00 - 8:00	8:00 - 9:00	9:00 - 10:00	10:00 - 11:00	11:00 - 12:00	12:00 - 13:00	13:00 - 14:00	14:00 - 15:00	15:00 - 16:00	16:00 - 17:00	17:00 - 18:00	18:00 - 19:00
Major St.	244%	286%	228%	233%	272%	290%	306%	292%	314%	325%	324%	254%
Minor St.	327%	344%	331%	288%	328%	424%	368%	344%	323%	341%	351%	255%

80% Combination of Conditions A & B is met

Warrant No. 2 - Four Hour Vehicular Volume is met

Hourly percent of warrant

	7:00 - 8:00	8:00 - 9:00	9:00 - 10:00	10:00 - 11:00	11:00 - 12:00	12:00 - 13:00	13:00 - 14:00	14:00 - 15:00	15:00 - 16:00	16:00 - 17:00	17:00 - 18:00	18:00 - 19:00
Minor St.	306%	323%	310%	270%	308%	398%	345%	323%	303%	320%	329%	239%

Warrant No. 3 - Peak Hour is met

Overall Peak Hour: 16:30 - 17:30 — Percent of warrant
Minor St. 296%

Higher Volume Side Street Peak Hour: 12:30 - 13:30 — Percent of warrant
Minor St. 339%

Warrant No. 4 - Pedestrian Volume. Pedestrian volume shown are minumum volumes assuming heavy major street traffic. If these volumes are met, warrant 4 requires further engineering analysis

S

Minimum 4 hour ped. volume crossing major street: 107

Minimum peak hour ped. volume crossing major street: 133

Number of pedestrians crossing major street

	7:00 - 8:00	8:00 - 9:00	9:00 - 10:00	10:00 - 11:00	11:00 - 12:00	12:00 - 13:00	13:00 - 14:00	14:00 - 15:00	15:00 - 16:00	16:00 - 17:00	17:00 - 18:00	18:00 - 19:00
Major t.	1	3	3	1	0	4	2	1	0	0	5	6

Warrant No. 7 - Crash Experience (Requires 3 criteria analysis by engineering)

Total Number: 0 From: 1/1/2005 to 1/1/2008
Accident Rate: 0.00 per million entering vehicles

Types of Accidents	No.	/	Avg.		No.	/	Avg.
Right Angle	0	/	0.0	Rear End	0	/	0.0
Lost Control	0	/	0.0	Side Swipe	0	/	0.0
Left Turn	0	/	0.0	Other	0	/	0.0

SOUTH CAROLINA DEPARTMENT OF TRANSPORTATION
DISTRICT 1
TRAFFIC ENGINEERING

County: Richland City: Columbia Date: 12/1/2016

Major Rt: Sunset Blvd * Not on State System Minor Rt: Whippoorwill Dr-Kleckley Dr Clear

Day of Week: Thursday Weather: Clear Office: Short Counts JMS

Type of Control: Signal Speed Limit (major st) 40

Direction of Minor Street: N-S Intersection ADT - 30760 (Calc)

Number of Lanes (major st)* 2 Number of Lanes (minor st)* 1

* Each Direction

INTERSECTION VOLUME SUMMARY

	From N Whippoorwill Dr-Kl				From S Whippoorwill Dr-Kl				From E Sunset Blvd				From W Sunset Blvd				Total	Total
	LT	STR	RT	TOT	LT	STR	RT	TOT	LT	STR	RT	TOT	LT	STR	RT	TOT	Vol	Peds
7:00 - 7:15	5	0	23	28	0	0	0	0	0	140	0	140	11	285	0	296	464	1
7:15 - 7:30	6	0	25	31	0	0	1	1	1	191	4	196	4	342	0	346	574	2
7:30 - 7:45	13	0	28	41	1	0	0	1	1	232	6	239	11	405	0	416	697	0
7:45 - 8:00	9	0	23	32	0	0	0	0	1	283	6	290	10	0	2	12	334	0
8:00 - 8:15	4	0	24	28	3	0	1	4	1	223	3	227	12	390	1	403	662	0
8:15 - 8:30	11	0	0	11	5	0	1	6	1	224	6	231	5	366	2	373	621	0
8:30 - 8:45	10	0	6	16	1	0	1	2	2	227	5	234	13	301	1	315	567	0
8:45 - 9:00	7	0	13	20	1	0	4	5	2	168	6	176	15	300	1	316	517	2
9:00 - 9:15	8	0	14	22	5	0	2	7	2	182	2	186	9	228	2	239	454	0
9:15 - 9:30	13	0	17	30	5	0	2	7	1	187	4	192	16	242	2	260	489	0
9:30 - 9:45	3	1	22	26	9	0	3	12	2	205	6	213	9	268	0	277	528	0
9:45 - 10:00	10	2	22	34	3	0	1	4	3	180	8	191	11	258	1	270	499	3
10:00 - 10:15	12	1	19	32	0	1	0	1	7	176	8	191	14	206	2	222	446	0
10:15 - 10:30	5	1	20	26	6	0	2	8	1	189	7	197	13	257	1	271	502	0
10:30 - 10:45	10	0	26	36	4	0	3	7	1	224	3	228	20	239	0	259	530	2
10:45 - 11:00	7	1	15	23	5	0	3	8	9	202	4	215	22	268	3	293	539	3
11:00 - 11:15	12	2	15	29	9	0	12	21	1	226	6	233	14	271	2	287	570	0
11:15 - 11:30	9	0	20	29	7	1	10	18	3	260	12	275	22	278	0	300	622	0
11:30 - 11:45	10	2	23	35	10	1	4	15	4	238	9	251	21	311	1	333	634	2
11:45 - 12:00	6	3	31	40	3	1	1	5	0	208	10	218	25	302	1	328	591	0
12:00 - 12:15	12	1	27	40	6	4	5	15	3	261	10	274	38	329	1	368	697	2
12:15 - 12:30	17	0	30	47	2	1	4	7	4	293	7	304	27	0	3	30	388	0
12:30 - 12:45	21	0	27	48	5	2	8	15	3	333	10	346	36	359	2	397	806	0
12:45 - 13:00	21	1	37	59	9	2	6	17	5	313	15	333	25	291	0	316	725	0
13:00 - 13:15	18	0	31	49	8	2	3	13	3	315	11	329	28	287	0	315	706	0
13:15 - 13:30	14	0	29	43	6	1	7	14	4	306	10	320	25	269	2	296	673	1
13:30 - 13:45	25	3	44	72	9	1	8	18	2	313	15	330	21	236	3	260	680	0
13:45 - 14:00	14	5	28	47	7	2	5	14	6	309	19	334	15	236	2	253	648	0
14:00 - 14:15	21	0	37	58	7	1	8	16	5	294	10	309	20	280	3	303	686	2
14:15 - 14:30	7	0	16	23	6	4	3	13	4	277	19	300	25	245	0	270	606	2
14:30 - 14:45	16	0	26	42	2	0	7	9	3	290	8	301	21	232	0	253	605	0
14:45 - 15:00	10	1	44	55	5	2	10	17	6	280	9	295	22	283	0	305	672	2
15:00 - 15:15	10	0	19	29	5	1	3	9	2	342	13	357	28	267	0	295	690	2
15:15 - 15:30	12	0	19	31	7	4	6	17	2	288	14	304	26	299	2	327	679	1
15:30 - 15:45	10	0	25	35	3	0	7	10	7	339	14	360	15	308	1	324	729	2
15:45 - 16:00	9	1	31	41	7	1	5	13	5	294	12	311	29	322	0	351	716	1
16:00 - 16:15	18	1	23	42	6	4	8	18	7	358	12	377	21	259	2	282	719	0
16:15 - 16:30	13	0	24	37	5	1	7	13	4	321	9	334	33	290	0	323	707	1
16:30 - 16:45	8	0	27	35	5	0	5	10	8	342	9	359	28	288	1	317	721	4
16:45 - 17:00	18	1	28	47	12	3	10	25	5	352	12	369	32	317	1	350	791	0
17:00 - 17:15	13	1	18	32	6	1	12	19	7	355	12	374	24	328	1	353	778	3
17:15 - 17:30	15	1	17	33	11	2	7	20	3	364	12	379	25	319	2	346	778	0
17:30 - 17:45	12	2	19	33	7	3	4	14	5	326	15	346	36	300	0	336	729	1
17:45 - 18:00	16	2	26	44	3	3	4	10	4	286	11	301	22	314	3	339	694	2
18:00 - 18:15	10	2	13	25	9	4	8	21	8	302	15	325	26	295	0	321	692	4
18:15 - 18:30	11	0	22	33	7	2	7	16	4	289	5	298	25	253	0	278	625	1
18:30 - 18:45	9	3	18	30	11	0	3	14	5	257	12	274	16	229	2	247	565	1
18:45 - 19:00	4	1	12	17	2	1	2	5	2	218	15	235	19	185	1	205	462	3
TOTAL	554	39	1103	1696	255	56	223	534	169	12782	450	13401	985	13137	54	14176	29807	50
Trucks	3	0	16	19	0	0	3	3	1	270	7	278	12	259	1	272	572	1.9%
School Buses	0	0	2	2	0	0	0	0	0	60	1	61	2	51	0	53	116	0.4%

TOTAL AND PEAK HOUR VOLUME DIAGRAMS

Sunset Blvd AT Whippoorwill Dr-Kleckley Dr Date: 12/1/2016

12.0 HOUR TOTAL VOLUME
FROM 7:00 TO 15:00

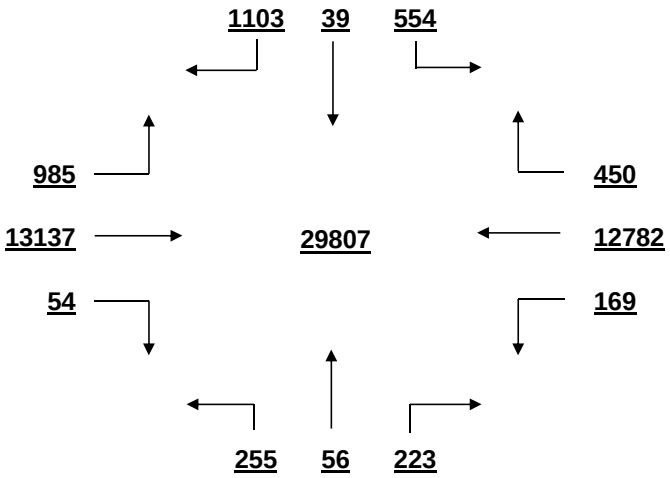

OVERALL PEAK HOUR VOLUME
FROM 16:45 TO 17:45

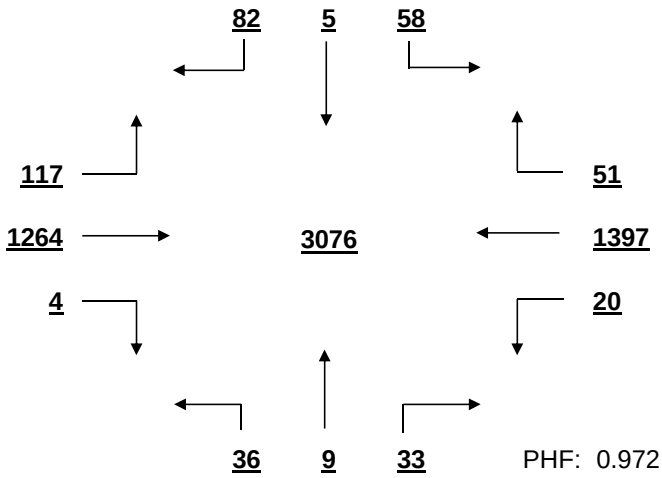

PHF: 0.972

AM PEAK HOUR VOLUME (0:00-10:45)
FROM 8:00 TO 9:00

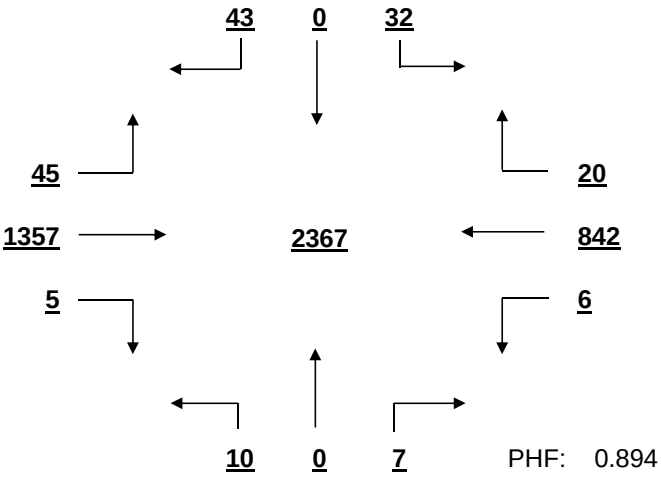

PHF: 0.894

PM PEAK HOUR VOLUME (14:15-23:45)
FROM 16:45 TO 17:45

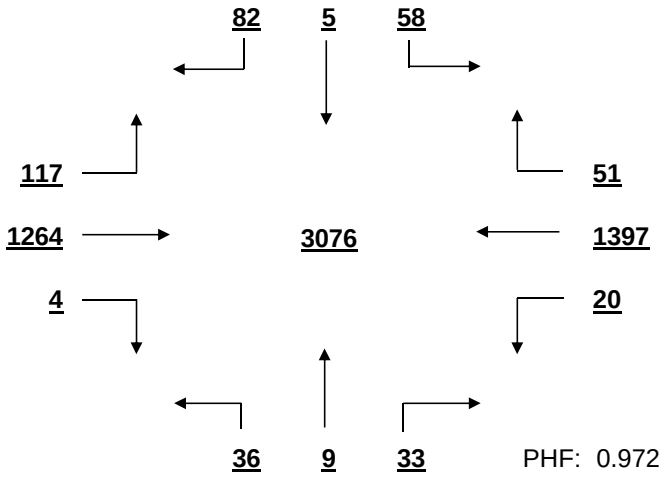

PHF: 0.972

MID-DAY PEAK HOUR VOLUME (11:00-14:00)
FROM 12:30 TO 13:30

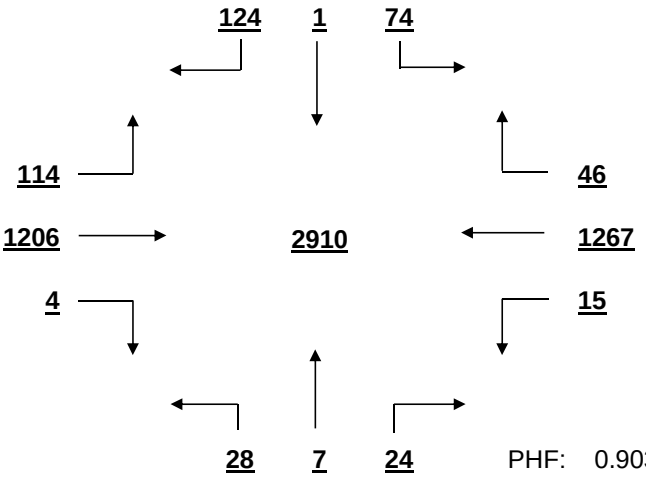

PHF: 0.903

OTHER HOUR VOLUME
FROM 7:00 TO 8:00

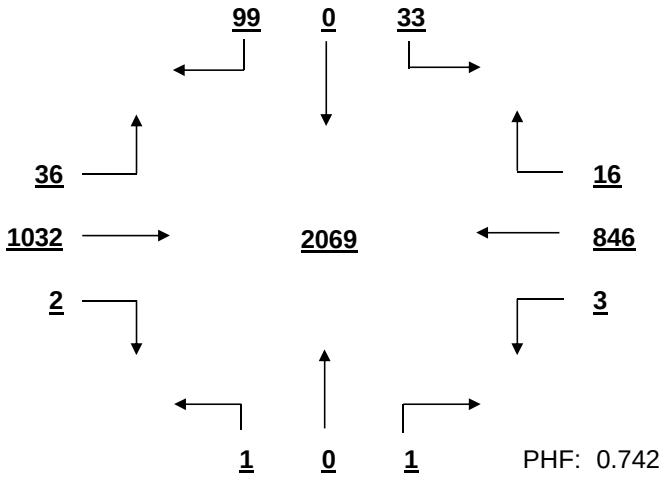

PHF: 0.742

SIGNAL WARRANT ANALYSIS

Sunset Blvd AT Whippoorwill Dr-Kleckley Dr Date: 12/1/2016

Minor Street Volume, percent of total = 7.5%
Percent of Left Turns from Minor Street = 36.3%
Percent of Right Turns from Minor Street = 59.5%
Percent of Minor Street Right Turns to Remove from Warrant Analysis = 0%
WARRANT BASIS = **100%**

Warrant No. 1 - Vehicular Volume is met

Condition A - Minimum Vehicular Volume is not met

Average Major Street % of Warrant				Average Minor Street % of Warrant			
2298.1	/ 600	=	383%	141.3	/ 150	=	94%

Hourly percent of warrant

	7:00 - 8:00	8:00 - 9:00	9:00 - 10:00	10:00 - 11:00	11:00 - 12:00	12:00 - 13:00	13:00 - 14:00	14:00 - 15:00	15:00 - 16:00	16:00 - 17:00	17:00 - 18:00	18:00 - 19:00
Major St.	323%	379%	305%	313%	371%	395%	406%	389%	438%	452%	462%	364%
Minor St.	88%	50%	75%	78%	89%	129%	141%	119%	91%	107%	95%	70%

Condition B - Interruption to Continuous Traffic is met

Average Major Street % of Warrant				Average Minor Street % of Warrant			
2298.1	/ 900	=	255%	141.3	/ 75	=	188%

Hourly percent of warrant

	7:00 - 8:00	8:00 - 9:00	9:00 - 10:00	10:00 - 11:00	11:00 - 12:00	12:00 - 13:00	13:00 - 14:00	14:00 - 15:00	15:00 - 16:00	16:00 - 17:00	17:00 - 18:00	18:00 - 19:00
Major St.	215%	253%	203%	208%	247%	263%	271%	260%	292%	301%	308%	243%
Minor St.	176%	100%	149%	156%	177%	259%	281%	237%	181%	215%	189%	140%

80% Combination of Conditions A & B is met

Warrant No. 2 - Four Hour Vehicular Volume is met

Hourly percent of warrant

	7:00 - 8:00	8:00 - 9:00	9:00 - 10:00	10:00 - 11:00	11:00 - 12:00	12:00 - 13:00	13:00 - 14:00	14:00 - 15:00	15:00 - 16:00	16:00 - 17:00	17:00 - 18:00	18:00 - 19:00
Minor St.	165%	94%	140%	146%	166%	243%	264%	223%	170%	201%	178%	131%

Warrant No. 3 - Peak Hour is met

Percent of warrant
Overall Peak Hour: 16:45 - 17:45
Minor St. 145%

Percent of warrant
Higher Volume Side Street Peak Hour: 12:45 - 13:45
Minor St. 223%

Warrant No. 4 - Pedestrian Volume. Pedestrian volume shown are minumum volumes assuming heavy major street traffic. If these volumes are met, warrant 4 requires further engineering analysis

S

Minimum 4 hour ped. volume crossing major street: 107

Minimum peak hour ped. volume crossing major street: 133

Number of pedestrians crossing major street

	7:00 - 8:00	8:00 - 9:00	9:00 - 10:00	10:00 - 11:00	11:00 - 12:00	12:00 - 13:00	13:00 - 14:00	14:00 - 15:00	15:00 - 16:00	16:00 - 17:00	17:00 - 18:00	18:00 - 19:00
Major t.	0	1	0	1	0	1	0	1	0	1	0	1

Warrant No. 7 - Crash Experience (Requires 3 criteria analysis by engineering)

Total Number: 0 From: 1/1/2005 to 1/1/2008
Accident Rate: 0.00 per million entering vehicles

Types of Accidents	No.	/	Avg.		No.	/	Avg.
Right Angle	0	/	0.0	Rear End	0	/	0.0
Lost Control	0	/	0.0	Side Swipe	0	/	0.0
Left Turn	0	/	0.0	Other	0	/	0.0

SOUTH CAROLINA DEPARTMENT OF TRANSPORTATION
DISTRICT 1
TRAFFIC ENGINEERING

County: Richland City: Columbia Date: 12/1/2016

Major Rt: Broad River Rd * Not on State System Minor Rt: Marley Dr-Menlo (Briarsgate) Dr

Day of Week: Thursday Weather: Clear Office: Short Counts JMS

Type of Control: Signal Speed Limit (major st) 40

Direction of Minor Street: E-W Intersection ADT - 34950 (Calc)

Number of Lanes (major st)* 2 Number of Lanes (minor st)* 1

* Each Direction

INTERSECTION VOLUME SUMMARY

	From N Broad River Rd				From S Broad River Rd				From E Marley Dr-Menlo (B				From W Marley Dr-Menlo (B				Total	Total
	LT	STR	RT	TOT	LT	STR	RT	TOT	LT	STR	RT	TOT	LT	STR	RT	TOT	Vol	Peds
7:00 - 7:15	6	344	8	358	5	246	4	255	7	0	8	15	12	0	11	23	651	4
7:15 - 7:30	4	454	10	468	9	299	4	312	10	0	7	17	22	1	0	23	820	0
7:30 - 7:45	11	352	5	368	14	312	4	330	13	0	6	19	14	2	31	47	764	0
7:45 - 8:00	11	328	4	343	21	359	2	382	16	0	10	26	21	0	24	45	796	3
8:00 - 8:15	9	348	12	369	11	254	4	269	13	0	7	20	12	1	19	32	690	4
8:15 - 8:30	8	371	0	379	8	296	9	313	15	0	5	20	13	1	10	24	736	1
8:30 - 8:45	9	359	10	378	9	244	7	260	8	3	4	15	15	4	27	46	699	2
8:45 - 9:00	12	328	12	352	14	263	8	285	10	0	11	21	12	1	21	34	692	3
9:00 - 9:15	11	245	6	262	8	224	5	237	10	0	6	16	14	0	16	30	545	3
9:15 - 9:30	15	234	13	262	6	248	4	258	7	0	6	13	13	1	18	32	565	0
9:30 - 9:45	15	223	13	251	5	218	2	225	8	1	8	17	14	1	10	25	518	6
9:45 - 10:00	18	240	6	264	4	245	3	252	5	0	6	11	15	2	7	24	551	4
10:00 - 10:15	9	230	7	246	0	237	0	237	10	1	10	21	13	0	7	20	524	2
10:15 - 10:30	14	229	14	257	9	244	4	257	8	1	10	19	21	1	15	37	570	3
10:30 - 10:45	10	243	17	270	4	236	6	246	8	0	5	13	17	1	13	31	560	2
10:45 - 11:00	13	245	18	276	8	258	10	276	11	1	10	22	16	3	8	27	601	0
11:00 - 11:15	7	268	10	285	5	243	6	254	13	0	7	20	16	2	6	24	583	3
11:15 - 11:30	7	224	6	237	6	246	2	254	9	2	6	17	27	4	11	42	550	1
11:30 - 11:45	8	291	9	308	13	240	9	262	7	3	11	21	27	1	18	46	637	1
11:45 - 12:00	10	278	7	295	6	273	5	284	10	1	5	16	13	0	13	26	621	2
12:00 - 12:15	7	269	14	290	9	277	12	298	21	2	6	29	20	0	14	34	651	2
12:15 - 12:30	18	308	9	335	13	301	4	318	9	0	8	17	21	0	13	34	704	1
12:30 - 12:45	9	266	19	294	10	282	8	300	17	0	8	25	13	3	15	31	650	3
12:45 - 13:00	8	275	15	298	6	307	9	322	10	1	10	21	19	1	22	42	683	0
13:00 - 13:15	8	258	15	281	8	283	9	300	14	2	10	26	16	4	15	35	642	0
13:15 - 13:30	9	300	13	322	15	338	6	359	12	1	10	23	24	1	21	46	750	3
13:30 - 13:45	15	307	17	339	12	346	5	363	10	1	8	19	21	1	11	33	754	3
13:45 - 14:00	11	304	5	320	8	300	7	315	13	1	11	25	20	0	11	31	691	3
14:00 - 14:15	2	324	20	346	14	314	7	335	8	0	6	14	14	0	11	25	720	7
14:15 - 14:30	14	295	13	322	6	312	13	331	13	0	7	20	20	1	0	21	694	2
14:30 - 14:45	8	322	17	347	14	344	13	371	16	0	14	30	21	0	14	35	783	0
14:45 - 15:00	19	284	20	323	15	361	10	386	19	2	10	31	22	2	18	42	782	6
15:00 - 15:15	8	315	11	334	8	322	8	338	15	0	15	30	16	0	9	25	727	5
15:15 - 15:30	17	0	14	31	10	315	15	340	14	4	18	36	14	1	23	38	445	5
15:30 - 15:45	11	326	12	349	19	341	7	367	40	0	16	56	16	3	16	35	807	1
15:45 - 16:00	11	283	11	305	8	379	12	399	22	2	11	35	11	2	14	27	766	2
16:00 - 16:15	11	334	14	359	12	399	12	423	19	1	13	33	22	0	8	30	845	1
16:15 - 16:30	8	320	9	337	18	436	15	469	19	1	8	28	20	0	13	33	867	1
16:30 - 16:45	8	319	15	342	13	446	12	471	44	1	10	55	17	1	16	34	902	3
16:45 - 17:00	12	301	15	328	11	424	16	451	22	0	9	31	16	0	14	30	840	3
17:00 - 17:15	7	285	5	297	12	492	14	518	26	1	8	35	17	0	13	30	880	6
17:15 - 17:30	12	322	15	349	14	435	16	465	15	0	7	22	22	0	15	37	873	4
17:30 - 17:45	10	276	4	290	12	499	8	519	27	1	14	42	20	1	12	33	884	2
17:45 - 18:00	12	291	12	315	13	461	12	486	12	0	12	24	17	1	9	27	852	1
18:00 - 18:15	10	283	5	298	18	446	12	476	27	0	18	45	20	1	14	35	854	1
18:15 - 18:30	9	0	14	23	14	504	10	528	12	2	7	21	13	0	11	24	596	0
18:30 - 18:45	13	243	10	266	10	385	8	403	28	0	21	49	9	1	11	21	739	7
18:45 - 19:00	9	228	7	244	4	172	4	180	15	0	7	22	11	3	7	21	467	1
TOTAL	503	13472	537	14512	491	15406	382	16279	717	36	450	1203	819	53	655	1527	33521	117
Trucks	5	198	7	210	13	172	3	188	7	3	2	12	12	0	14	26	436	1.3%
School Buses	2	86	4	92	2	68	3	73	1	0	5	6	2	4	3	9	180	0.5%

TOTAL AND PEAK HOUR VOLUME DIAGRAMS

Broad River Rd AT Marley Dr-Menlo (Briarsgate) Dr Date: 12/1/2016

12.0 HOUR TOTAL VOLUME
FROM 7:00 TO 15:00

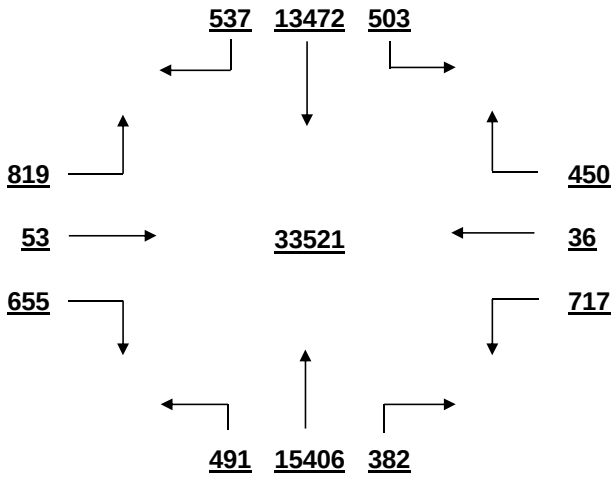

OVERALL PEAK HOUR VOLUME
FROM 16:30 TO 17:30

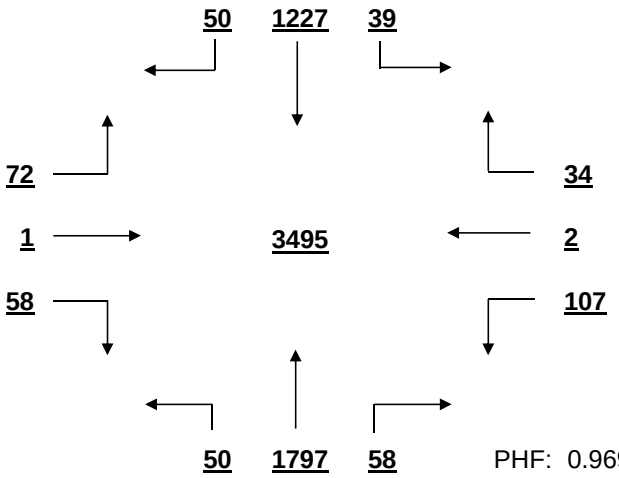

PHF: 0.969

AM PEAK HOUR VOLUME (0:00-10:45)
FROM 7:15 TO 8:15

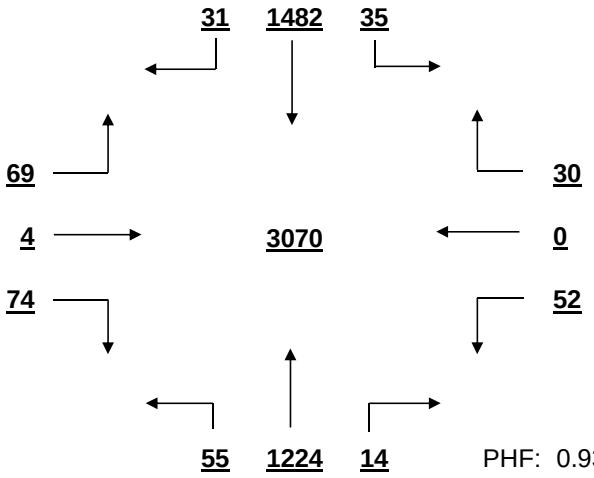

PHF: 0.936

PM PEAK HOUR VOLUME (14:15-23:45)
FROM 16:30 TO 17:30

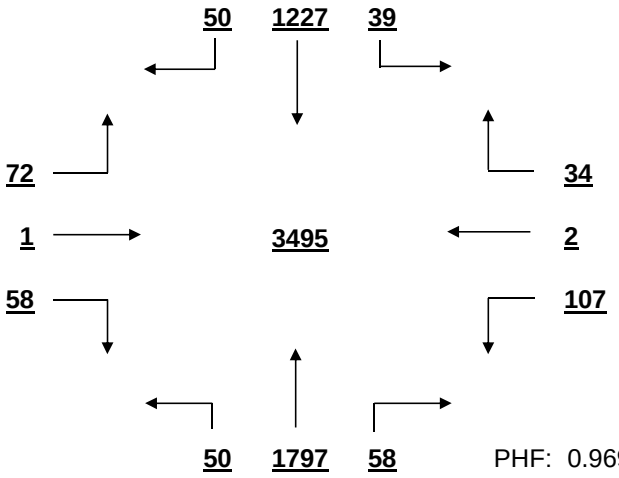

PHF: 0.969

MID-DAY PEAK HOUR VOLUME (11:00-14:00)
FROM 13:00 TO 14:00

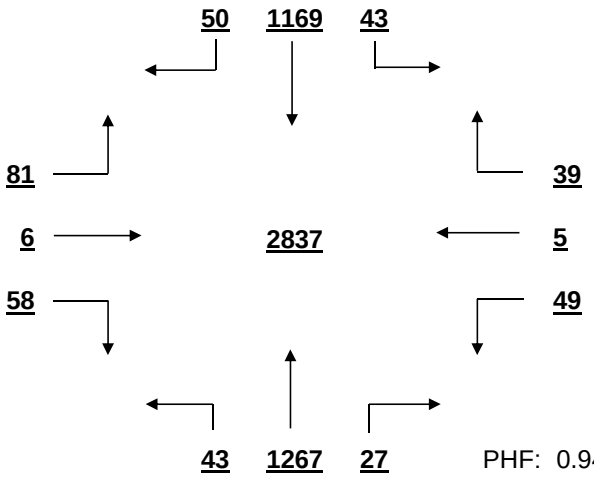

PHF: 0.941

OTHER HOUR VOLUME
FROM 7:00 TO 8:00

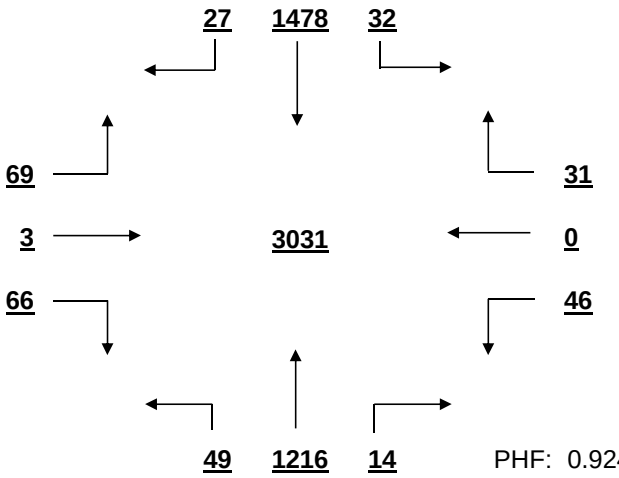

PHF: 0.924

SIGNAL WARRANT ANALYSIS

Broad River Rd AT Marley Dr-Menlo (Briarsgate) Dr Date: 12/1/2016

Minor Street Volume, percent of total = 8.1%
Percent of Left Turns from Minor Street = 56.3%
Percent of Right Turns from Minor Street = 40.5%
Percent of Minor Street Right Turns to Remove from Warrant Analysis = 0%
WARRANT BASIS = **100%**

Warrant No. 1 - Vehicular Volume is met

Condition A - Minimum Vehicular Volume is not met

Average Major Street % of Warrant				Average Minor Street % of Warrant			
2565.9	/ 600	=	428%	127.3	/ 150	=	85%

Hourly percent of warrant

	7:00 - 8:00	8:00 - 9:00	9:00 - 10:00	10:00 - 11:00	11:00 - 12:00	12:00 - 13:00	13:00 - 14:00	14:00 - 15:00	15:00 - 16:00	16:00 - 17:00	17:00 - 18:00	18:00 - 19:00
Major St.	469%	434%	335%	344%	363%	409%	433%	460%	411%	530%	540%	403%
Minor St.	92%	91%	74%	77%	92%	94%	97%	82%	105%	98%	85%	91%

Condition B - Interruption to Continuous Traffic is met

Average Major Street % of Warrant				Average Minor Street % of Warrant			
2565.9	/ 900	=	285%	127.3	/ 75	=	170%

Hourly percent of warrant

	7:00 - 8:00	8:00 - 9:00	9:00 - 10:00	10:00 - 11:00	11:00 - 12:00	12:00 - 13:00	13:00 - 14:00	14:00 - 15:00	15:00 - 16:00	16:00 - 17:00	17:00 - 18:00	18:00 - 19:00
Major St.	313%	289%	223%	229%	242%	273%	289%	307%	274%	353%	360%	269%
Minor St.	184%	181%	148%	153%	184%	188%	193%	164%	209%	196%	169%	183%

80% Combination of Conditions A & B is met

Warrant No. 2 - Four Hour Vehicular Volume is met

Hourly percent of warrant

	7:00 - 8:00	8:00 - 9:00	9:00 - 10:00	10:00 - 11:00	11:00 - 12:00	12:00 - 13:00	13:00 - 14:00	14:00 - 15:00	15:00 - 16:00	16:00 - 17:00	17:00 - 18:00	18:00 - 19:00
Minor St.	173%	170%	139%	144%	173%	176%	181%	154%	196%	184%	159%	171%

Warrant No. 3 - Peak Hour is met

Overall Peak Hour: 16:30 - 17:30 — Percent of warrant — Minor St. 143%

Higher Volume Side Street Peak Hour: 15:15 - 16:15 — Percent of warrant — Minor St. 160%

Warrant No. 4 - Pedestrian Volume. Pedestrian volume shown are minumum volumes assuming heavy major street traffic. If these volumes are met, warrant 4 requires further engineering analysis

S

Minimum 4 hour ped. volume crossing major street: 107

Minimum peak hour ped. volume crossing major street: 133

Number of pedestrians crossing major street

	7:00 - 8:00	8:00 - 9:00	9:00 - 10:00	10:00 - 11:00	11:00 - 12:00	12:00 - 13:00	13:00 - 14:00	14:00 - 15:00	15:00 - 16:00	16:00 - 17:00	17:00 - 18:00	18:00 - 19:00
Major t.	1	1	2	1	0	1	3	2	2	0	3	0

Warrant No. 7 - Crash Experience (Requires 3 criteria analysis by engineering)

Total Number: 0 From: 1/1/2005 to 1/1/2008

Accident Rate: 0.00 per million entering vehicles

Types of Accidents	No.	/	Avg.		No.	/	Avg.
Right Angle	0	/	0.0	Rear End	0	/	0.0
Lost Control	0	/	0.0	Side Swipe	0	/	0.0
Left Turn	0	/	0.0	Other	0	/	0.0

SOUTH CAROLINA DEPARTMENT OF TRANSPORTATION
DISTRICT 1
TRAFFIC ENGINEERING

County: Richland City: Columbia Date: 12/2/2016

Major Rt: I-20 EB On-Ramp Minor Rt: Garner Ln
Clear

Day of Week: Friday Weather: Clear Office: Short Counts JMS

Type of Control: Stop Sign Speed Limit (major st) NPSL

Direction of Minor Street: E-W Intersection ADT - 11070 (Calc)

Number of Lanes (major st)* 1 Number of Lanes (minor st)* 1
* Each Direction

INTERSECTION VOLUME SUMMARY

	From N I-20 EB On-Ramp				From S I-20 EB On-Ramp				From E Garner Ln				From W Garner Ln				Total	Total
	LT	STR	RT	TOT	LT	STR	RT	TOT	LT	STR	RT	TOT	LT	STR	RT	TOT	Vol	Peds
7:00 - 7:15	0	0	0	0	0	175	7	182	4	0	1	5	0	0	0	0	187	1
7:15 - 7:30	0	0	0	0	0	237	5	242	7	0	5	12	0	0	0	0	254	1
7:30 - 7:45	0	0	0	0	0	249	22	271	6	0	3	9	0	0	0	0	280	0
7:45 - 8:00	0	0	0	0	0	169	43	212	8	0	11	19	0	0	0	0	231	1
8:00 - 8:15	0	0	0	0	0	163	23	186	4	0	2	6	0	0	0	0	192	0
8:15 - 8:30	0	0	0	0	0	140	18	158	6	0	5	11	0	0	0	0	169	1
8:30 - 8:45	0	0	0	0	0	194	16	210	3	0	5	8	0	0	0	0	218	0
8:45 - 9:00	0	0	0	0	0	149	9	158	4	0	0	4	0	0	0	0	162	0
9:00 - 9:15	0	0	0	0	0	154	16	170	3	0	2	5	0	0	0	0	175	1
9:15 - 9:30	0	0	0	0	0	159	14	173	7	0	7	14	0	0	0	0	187	0
9:30 - 9:45	0	0	0	0	0	138	12	150	10	0	3	13	0	0	0	0	163	1
9:45 - 10:00	0	0	0	0	0	133	13	146	8	0	1	9	0	0	0	0	155	1
10:00 - 10:15	0	0	0	0	0	126	0	126	16	0	2	18	0	0	0	0	144	2
10:15 - 10:30	0	0	0	0	0	127	15	142	13	0	2	15	0	0	0	0	157	0
10:30 - 10:45	0	0	0	0	0	133	20	153	9	0	2	11	0	0	0	0	164	1
10:45 - 11:00	0	0	0	0	0	153	17	170	12	0	4	16	0	0	0	0	186	0
11:00 - 11:15	0	0	0	0	0	151	21	172	9	0	5	14	0	0	0	0	186	0
11:15 - 11:30	0	0	0	0	0	169	16	185	10	0	2	12	0	0	0	0	197	1
11:30 - 11:45	0	0	0	0	0	177	9	186	10	0	4	14	0	0	0	0	200	0
11:45 - 12:00	0	0	0	0	0	165	21	186	15	0	9	24	0	0	0	0	210	0
12:00 - 12:15	0	0	0	0	0	203	7	210	27	0	1	28	0	0	0	0	238	1
12:15 - 12:30	0	0	0	0	0	168	21	189	9	0	3	12	0	0	0	0	201	0
12:30 - 12:45	0	0	0	0	0	170	15	185	12	0	7	19	0	0	0	0	204	0
12:45 - 13:00	0	0	0	0	0	192	14	206	8	0	10	18	0	0	0	0	224	0
13:00 - 13:15	0	0	0	0	0	164	15	179	20	0	7	27	0	0	0	0	206	0
13:15 - 13:30	0	0	0	0	0	166	15	181	12	0	6	18	0	0	0	0	199	0
13:30 - 13:45	0	0	0	0	0	181	17	198	15	0	6	21	0	0	0	0	219	1
13:45 - 14:00	0	0	0	0	0	199	24	223	16	0	2	18	0	0	0	0	241	1
14:00 - 14:15	0	0	0	0	0	200	16	216	12	0	1	13	0	0	0	0	229	2
14:15 - 14:30	0	0	0	0	0	209	15	224	12	0	2	14	0	0	0	0	238	0
14:30 - 14:45	0	0	0	0	0	196	11	207	9	0	7	16	0	0	0	0	223	0
14:45 - 15:00	0	0	0	0	0	200	16	216	9	0	6	15	0	0	0	0	231	0
15:00 - 15:15	0	0	0	0	0	209	10	219	17	0	2	19	0	0	0	0	238	0
15:15 - 15:30	0	0	0	0	0	243	13	256	7	0	5	12	0	0	0	0	268	0
15:30 - 15:45	0	0	0	0	0	213	12	225	11	0	4	15	0	0	0	0	240	5
15:45 - 16:00	0	0	0	0	0	241	9	250	12	0	4	16	0	0	0	0	266	3
16:00 - 16:15	0	0	0	0	0	239	12	251	9	0	5	14	0	0	0	0	265	0
16:15 - 16:30	0	0	0	0	0	238	8	246	4	0	8	12	0	0	0	0	258	1
16:30 - 16:45	0	0	0	0	0	238	10	248	7	0	4	11	0	0	0	0	259	0
16:45 - 17:00	0	0	0	0	0	230	13	243	10	0	5	15	0	0	0	0	258	2
17:00 - 17:15	0	0	0	0	0	267	13	280	31	0	19	50	0	0	0	0	330	0
17:15 - 17:30	0	0	0	0	0	233	12	245	7	0	8	15	0	0	0	0	260	0
17:30 - 17:45	0	0	0	0	0	192	15	207	11	0	12	23	0	0	0	0	230	0
17:45 - 18:00	0	0	0	0	0	216	10	226	12	0	4	16	0	0	0	0	242	0
18:00 - 18:15	0	0	0	0	0	164	12	176	16	0	9	25	0	0	0	0	201	0
18:15 - 18:30	0	0	0	0	0	194	8	202	8	0	5	13	0	0	0	0	215	5
18:30 - 18:45	0	0	0	0	0	216	9	225	15	0	5	20	0	0	0	0	245	2
18:45 - 19:00	0	0	0	0	0	171	9	180	13	0	2	15	0	0	0	0	195	0
TOTAL	0	0	0	0	0	9013	678	9691	515	0	234	749	0	0	0	0	10440	34
Trucks	0	0	0	0	0	103	6	109	5	0	2	7	0	0	0	0	116	1.1%
School Buses	0	0	0	0	0	56	0	56	1	0	0	1	0	0	0	0	57	0.5%

TOTAL AND PEAK HOUR VOLUME DIAGRAMS

I-20 EB On-Ramp AT Garner Ln Date: 12/2/2016

12.0 HOUR TOTAL VOLUME
FROM 7:00 TO 15:00

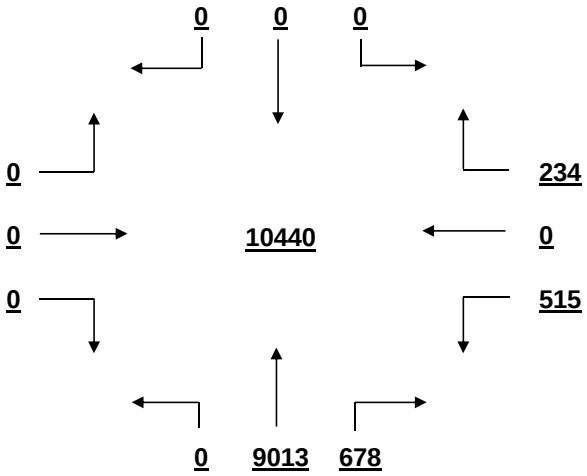

OVERALL PEAK HOUR VOLUME
FROM 16:30 TO 17:30

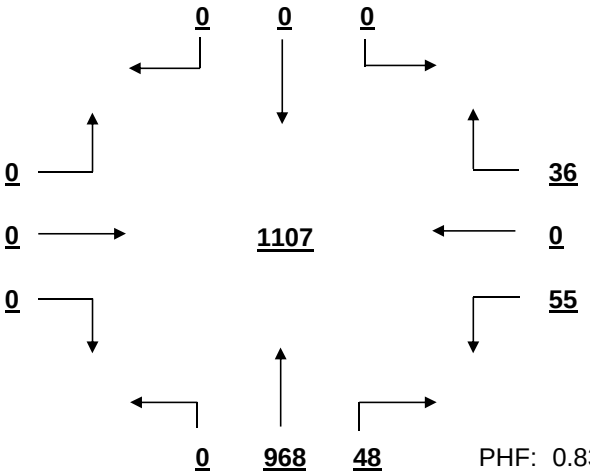

PHF: 0.839

AM PEAK HOUR VOLUME (0:00-10:45)
FROM 7:15 TO 8:15

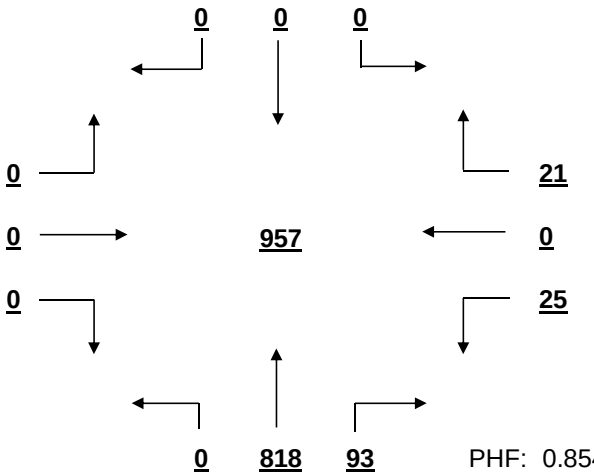

PHF: 0.854

PM PEAK HOUR VOLUME (14:15-23:45)
FROM 16:30 TO 17:30

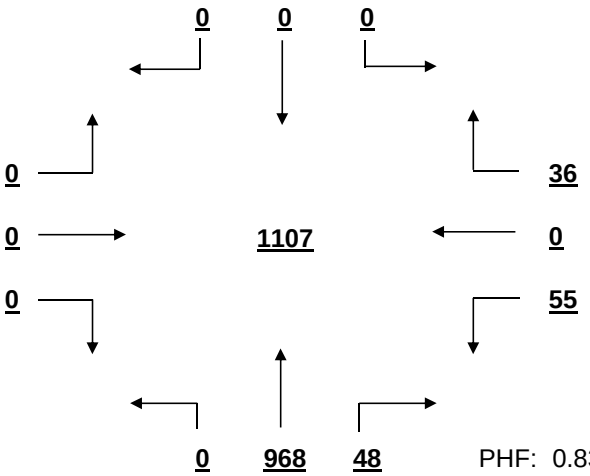

PHF: 0.839

MID-DAY PEAK HOUR VOLUME (11:00-14:00)
FROM 12:00 TO 13:00

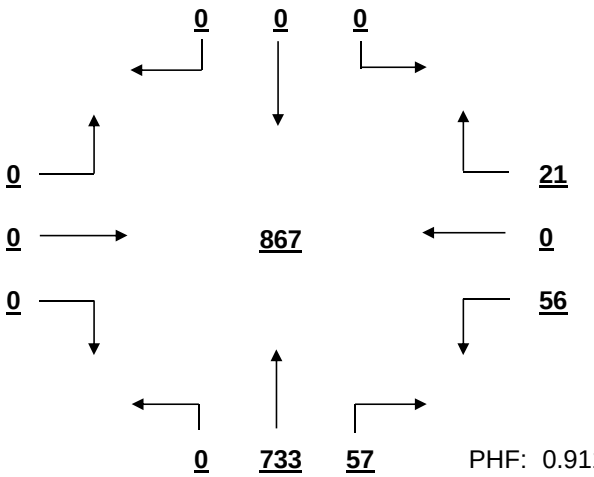

PHF: 0.911

OTHER HOUR VOLUME
FROM 7:00 TO 8:00

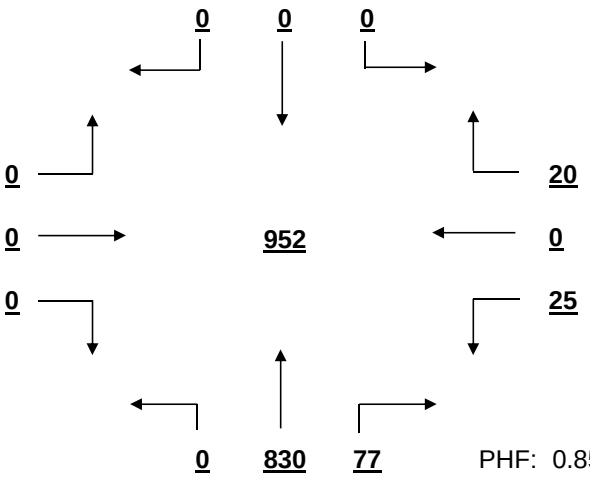

PHF: 0.850

SIGNAL WARRANT ANALYSIS

I-20 EB On-Ramp AT Garner Ln Date: 12/2/2016

Minor Street Volume, percent of total = 7.2%
Percent of Left Turns from Minor Street = 68.8%
Percent of Right Turns from Minor Street = 31.2%
Percent of Minor Street Right Turns to Remove from Warrant Analysis = 0%
WARRANT BASIS = **70%**

Warrant No. 1 - Vehicular Volume is met

Condition A - Minimum Vehicular Volume is not met

Average Major Street % of Warrant				Average Minor Street % of Warrant			
807.6	/ 350	=	231%	62.4	/ 105	=	59%

Hourly percent of warrant

	7:00 - 8:00	8:00 - 9:00	9:00 - 10:00	10:00 - 11:00	11:00 - 12:00	12:00 - 13:00	13:00 - 14:00	14:00 - 15:00	15:00 - 16:00	16:00 - 17:00	17:00 - 18:00	18:00 - 19:00
Major St.	259%	203%	183%	169%	208%	226%	223%	247%	271%	282%	274%	224%
Minor St.	43%	28%	39%	57%	61%	73%	80%	55%	59%	50%	99%	70%

Condition B - Interruption to Continuous Traffic is met

Average Major Street % of Warrant				Average Minor Street % of Warrant			
807.6	/ 525	=	154%	62.4	/ 53	=	119%

Hourly percent of warrant

	7:00 - 8:00	8:00 - 9:00	9:00 - 10:00	10:00 - 11:00	11:00 - 12:00	12:00 - 13:00	13:00 - 14:00	14:00 - 15:00	15:00 - 16:00	16:00 - 17:00	17:00 - 18:00	18:00 - 19:00
Major St.	173%	136%	122%	113%	139%	150%	149%	164%	181%	188%	182%	149%
Minor St.	86%	55%	78%	114%	122%	147%	160%	110%	118%	99%	198%	139%

80% Combination of Conditions A & B is not applicable

Warrant No. 2 - Four Hour Vehicular Volume is met

Hourly percent of warrant

	7:00 - 8:00	8:00 - 9:00	9:00 - 10:00	10:00 - 11:00	11:00 - 12:00	12:00 - 13:00	13:00 - 14:00	14:00 - 15:00	15:00 - 16:00	16:00 - 17:00	17:00 - 18:00	18:00 - 19:00
Minor St.	75%	43%	49%	62%	101%	147%	156%	97%	103%	87%	173%	137%

Warrant No. 3 - Peak Hour is met

Overall Peak Hour: 16:30 - 17:30 — Percent of warrant
Minor St. 119%

Higher Volume Side Street Peak Hour: 17:00 - 18:00 — Percent of warrant
Minor St. 125%

Warrant No. 4 - Pedestrian Volume. Pedestrian volume shown are minumum volumes assuming heavy major street traffic. If these volumes are met, warrant 4 requires further engineering analysis

S

Minimum 4 hour ped. volume crossing major street: 75

Minimum peak hour ped. volume crossing major street: 93

Number of pedestrians crossing major street

	7:00 - 8:00	8:00 - 9:00	9:00 - 10:00	10:00 - 11:00	11:00 - 12:00	12:00 - 13:00	13:00 - 14:00	14:00 - 15:00	15:00 - 16:00	16:00 - 17:00	17:00 - 18:00	18:00 - 19:00
Major t.	3	1	3	3	1	1	2	2	8	3	0	7

Warrant No. 7 - Crash Experience (Requires 3 criteria analysis by engineering)

Total Number: 0 From: 1/1/2005 to 1/1/2008
Accident Rate: 0.00 per million entering vehicles

Types of Accidents	No.	/	Avg.		No.	/	Avg.
Right Angle	0	/	0.0	Rear End	0	/	0.0
Lost Control	0	/	0.0	Side Swipe	0	/	0.0
Left Turn	0	/	0.0	Other	0	/	0.0

SOUTH CAROLINA DEPARTMENT OF TRANSPORTATION
DISTRICT 1
TRAFFIC ENGINEERING

County: Richland City: Columbia Date: 12/1/2016

Major Rt: Broad River Rd * Not on State System Minor Rt: Longcreek Dr Clear

Day of Week: Thursday Weather: Clear Office: Short Counts JMS

Type of Control: Signal Speed Limit (major st) 40

Direction of Minor Street: E-W Intersection ADT - 30830 (Calc)

Number of Lanes (major st)* 2 Number of Lanes (minor st)* 1

* Each Direction

INTERSECTION VOLUME SUMMARY

	From N Broad River Rd				From S Broad River Rd				From E Longcreek Dr				From W Longcreek Dr				Total	Total
	LT	STR	RT	TOT	LT	STR	RT	TOT	LT	STR	RT	TOT	LT	STR	RT	TOT	Vol	Peds
7:00 - 7:15	7	258	1	266	0	153	10	163	32	0	37	69	0	0	0	0	498	1
7:15 - 7:30	22	357	3	382	0	175	26	201	42	0	36	78	0	0	0	0	661	0
7:30 - 7:45	31	331	0	362	0	221	26	247	33	0	56	89	0	0	0	0	698	0
7:45 - 8:00	21	355	0	376	0	215	18	233	34	0	56	90	0	0	0	0	699	0
8:00 - 8:15	18	364	1	383	0	171	14	185	39	0	31	70	0	0	0	0	638	0
8:15 - 8:30	21	354	0	375	1	188	17	206	26	0	27	53	0	0	0	0	634	3
8:30 - 8:45	12	395	2	409	0	192	18	210	27	0	29	56	0	0	0	0	675	3
8:45 - 9:00	23	339	2	364	0	190	21	211	31	0	25	56	0	0	0	0	631	1
9:00 - 9:15	21	260	1	282	1	185	8	194	17	0	32	49	0	0	0	0	525	0
9:15 - 9:30	14	232	1	247	0	182	14	196	29	0	26	55	0	0	0	0	498	3
9:30 - 9:45	15	224	1	240	0	176	14	190	15	0	22	37	0	0	0	0	467	1
9:45 - 10:00	19	244	2	265	0	182	11	193	20	1	33	54	0	0	0	0	512	0
10:00 - 10:15	24	226	1	251	0	207	0	207	25	0	25	50	0	0	0	0	508	1
10:15 - 10:30	27	238	0	265	1	176	14	191	17	0	35	52	0	0	0	0	508	2
10:30 - 10:45	23	223	1	247	0	206	16	222	15	0	16	31	0	0	0	0	500	0
10:45 - 11:00	21	238	6	265	1	212	16	229	21	1	33	55	0	0	0	0	549	3
11:00 - 11:15	23	242	4	269	2	222	21	245	30	0	21	51	0	0	0	0	565	1
11:15 - 11:30	26	211	1	238	2	207	18	227	24	0	32	56	0	0	0	0	521	1
11:30 - 11:45	21	271	1	293	4	228	29	261	24	0	25	49	0	0	0	0	603	0
11:45 - 12:00	22	246	16	284	5	248	26	279	21	0	18	39	0	0	0	0	602	0
12:00 - 12:15	33	280	3	316	8	259	34	301	38	0	33	71	0	0	0	0	688	0
12:15 - 12:30	32	262	11	305	8	286	27	321	32	0	31	63	0	0	0	0	689	2
12:30 - 12:45	31	287	9	327	4	281	26	311	31	0	31	62	0	0	0	0	700	0
12:45 - 13:00	21	246	7	274	2	254	17	273	41	0	26	67	0	0	0	0	614	4
13:00 - 13:15	38	286	8	332	8	276	34	318	35	0	36	71	0	0	0	0	721	2
13:15 - 13:30	32	271	4	307	6	286	39	331	27	0	26	53	0	0	0	0	691	2
13:30 - 13:45	38	273	6	317	4	319	27	350	34	0	30	64	0	0	0	0	731	0
13:45 - 14:00	36	238	5	279	4	295	30	329	30	0	31	61	0	0	0	0	669	2
14:00 - 14:15	33	274	8	315	8	274	32	314	35	0	40	75	0	0	0	0	704	2
14:15 - 14:30	39	255	3	297	2	306	36	344	26	0	47	73	0	0	0	0	714	1
14:30 - 14:45	24	249	4	277	0	271	25	296	20	0	42	62	0	0	0	0	635	0
14:45 - 15:00	44	277	5	326	1	294	32	327	35	0	29	64	0	0	0	0	717	2
15:00 - 15:15	50	266	3	319	0	288	35	323	36	0	30	66	0	0	0	0	708	1
15:15 - 15:30	32	0	3	35	4	293	29	326	31	1	49	81	0	0	0	0	442	3
15:30 - 15:45	43	290	4	337	2	277	43	322	28	0	26	54	0	0	0	0	713	0
15:45 - 16:00	42	259	7	308	2	281	36	319	29	0	45	74	0	0	0	0	701	0
16:00 - 16:15	36	262	4	302	3	328	21	352	22	1	32	55	0	0	0	0	709	2
16:15 - 16:30	56	286	7	349	5	308	37	350	28	0	27	55	0	0	0	0	754	0
16:30 - 16:45	37	256	0	293	1	371	36	408	31	0	46	77	0	0	0	0	778	1
16:45 - 17:00	47	233	2	282	1	388	22	411	22	0	26	48	0	0	0	0	741	2
17:00 - 17:15	41	219	1	261	1	398	33	432	37	0	36	73	0	0	0	0	766	0
17:15 - 17:30	37	259	0	296	1	394	36	431	43	0	28	71	0	0	0	0	798	1
17:30 - 17:45	52	235	5	292	2	349	39	390	37	0	38	75	0	0	0	0	757	2
17:45 - 18:00	60	205	2	267	2	291	54	347	48	0	54	102	0	0	0	0	716	3
18:00 - 18:15	40	247	3	290	2	320	32	354	27	0	29	56	0	0	0	0	700	1
18:15 - 18:30	59	0	7	66	1	303	35	339	39	0	41	80	0	0	0	0	485	3
18:30 - 18:45	53	225	6	284	1	284	36	321	39	0	31	70	0	0	0	0	675	0
18:45 - 19:00	51	175	5	231	1	236	46	283	20	0	37	57	0	0	0	0	571	0
TOTAL	1548	12223	176	13947	101	12446	1266	13813	1423	4	1592	3019	0	0	0	0	30779	56
Trucks	22	137	2	161	0	118	11	129	10	0	16	26	0	0	0	0	316	1.0%
School Buses	6	75	0	81	0	72	9	81	4	0	9	13	0	0	0	0	175	0.6%

TOTAL AND PEAK HOUR VOLUME DIAGRAMS

Broad River Rd AT Longcreek Dr Date: 12/1/2016

12.0 HOUR TOTAL VOLUME
FROM 7:00 TO 15:00

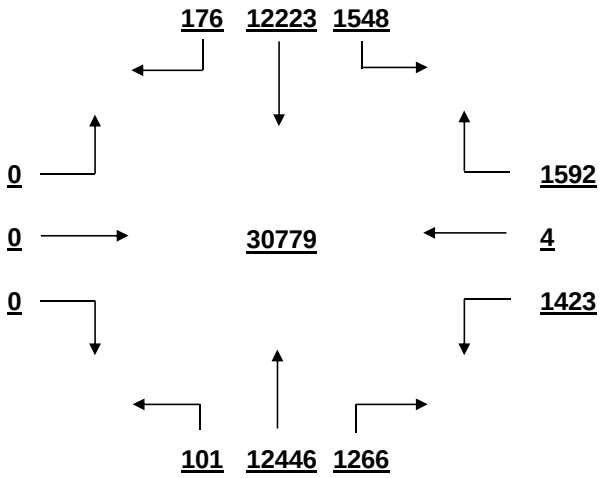

OVERALL PEAK HOUR VOLUME
FROM 16:30 TO 17:30

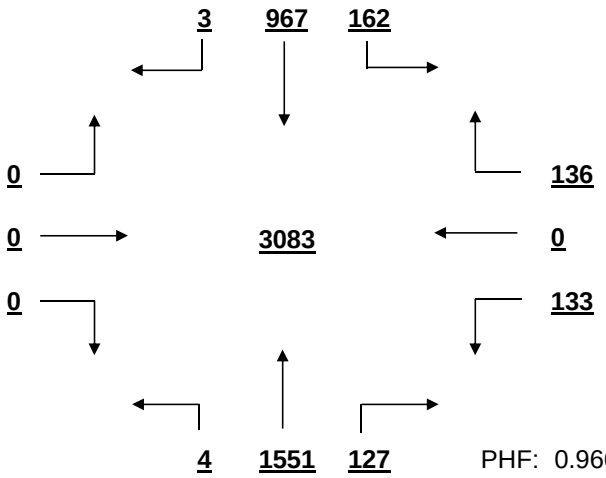

PHF: 0.966

AM PEAK HOUR VOLUME (0:00-10:45)
FROM 7:15 TO 8:15

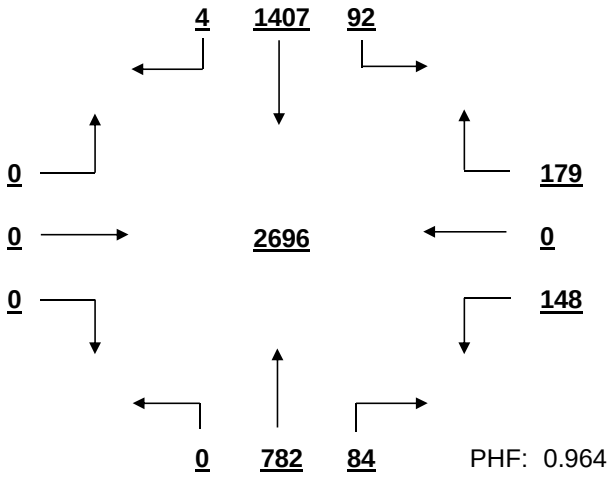

PHF: 0.964

PM PEAK HOUR VOLUME (14:15-23:45)
FROM 16:30 TO 17:30

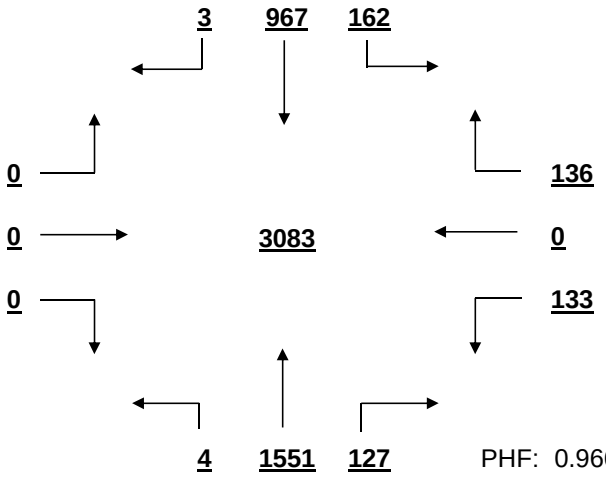

PHF: 0.966

MID-DAY PEAK HOUR VOLUME (11:00-14:00)
FROM 13:00 TO 14:00

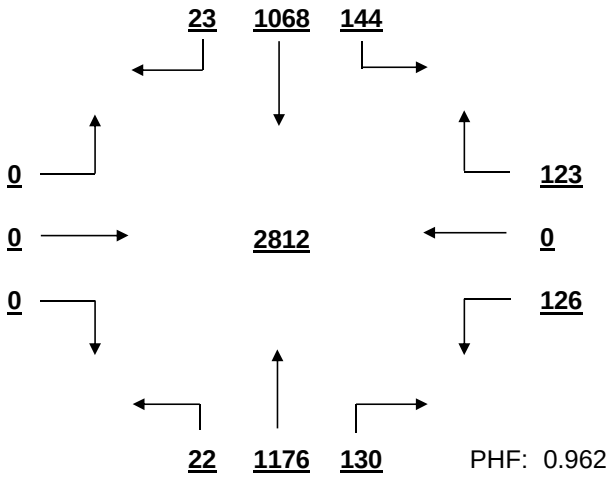

PHF: 0.962

OTHER HOUR VOLUME
FROM 7:00 TO 8:00

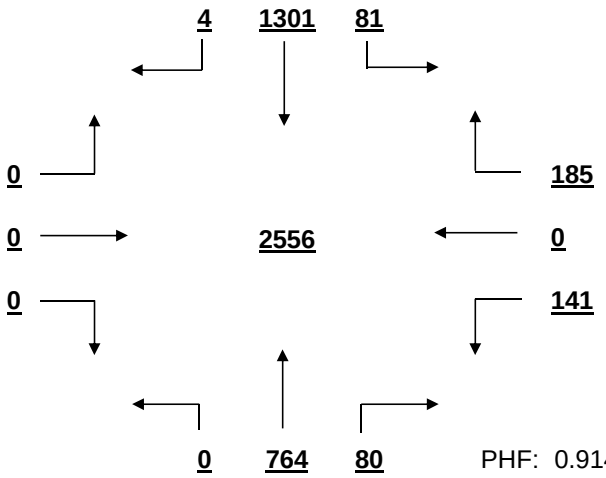

PHF: 0.914

SIGNAL WARRANT ANALYSIS

Broad River Rd AT Longcreek Dr Date: 12/1/2016

Minor Street Volume, percent of total = 9.8%
Percent of Left Turns from Minor Street = 47.1%
Percent of Right Turns from Minor Street = 52.7%
Percent of Minor Street Right Turns to Remove from Warrant Analysis = 0%
WARRANT BASIS = **100%**

Warrant No. 1 - Vehicular Volume is met

Condition A - Minimum Vehicular Volume is met

Average Major Street % of Warrant				Average Minor Street % of Warrant			
2313.3	/ 600	=	386%	251.6	/ 150	=	168%

Hourly percent of warrant

	7:00 - 8:00	8:00 - 9:00	9:00 - 10:00	10:00 - 11:00	11:00 - 12:00	12:00 - 13:00	13:00 - 14:00	14:00 - 15:00	15:00 - 16:00	16:00 - 17:00	17:00 - 18:00	18:00 - 19:00
Major St.	372%	391%	301%	313%	349%	405%	427%	416%	382%	458%	453%	361%
Minor St.	217%	157%	130%	125%	130%	175%	166%	183%	183%	157%	214%	175%

Condition B - Interruption to Continuous Traffic is met

Average Major Street % of Warrant				Average Minor Street % of Warrant			
2313.3	/ 900	=	257%	251.6	/ 75	=	335%

Hourly percent of warrant

	7:00 - 8:00	8:00 - 9:00	9:00 - 10:00	10:00 - 11:00	11:00 - 12:00	12:00 - 13:00	13:00 - 14:00	14:00 - 15:00	15:00 - 16:00	16:00 - 17:00	17:00 - 18:00	18:00 - 19:00
Major St.	248%	260%	201%	209%	233%	270%	285%	277%	254%	305%	302%	241%
Minor St.	435%	313%	260%	251%	260%	351%	332%	365%	367%	313%	428%	351%

80% Combination of Conditions A & B is met

Warrant No. 2 - Four Hour Vehicular Volume is met

Hourly percent of warrant

	7:00 - 8:00	8:00 - 9:00	9:00 - 10:00	10:00 - 11:00	11:00 - 12:00	12:00 - 13:00	13:00 - 14:00	14:00 - 15:00	15:00 - 16:00	16:00 - 17:00	17:00 - 18:00	18:00 - 19:00
Minor St.	408%	294%	244%	235%	244%	329%	311%	343%	344%	294%	401%	329%

Warrant No. 3 - Peak Hour is met

Overall Peak Hour: 16:30 - 17:30 — Percent of warrant
Minor St. 269%

Higher Volume Side Street Peak Hour: 7:15 - 8:15 — Percent of warrant
Minor St. 327%

Warrant No. 4 - Pedestrian Volume. Pedestrian volume shown are minumum volumes assuming heavy major street traffic. If these volumes are met, warrant 4 requires further engineering analysis

S

Minimum 4 hour ped. volume crossing major street: 107

Minimum peak hour ped. volume crossing major street: 133

Number of pedestrians crossing major street

	7:00 - 8:00	8:00 - 9:00	9:00 - 10:00	10:00 - 11:00	11:00 - 12:00	12:00 - 13:00	13:00 - 14:00	14:00 - 15:00	15:00 - 16:00	16:00 - 17:00	17:00 - 18:00	18:00 - 19:00
Major t.	1	4	1	2	0	4	4	3	2	1	3	3

Warrant No. 7 - Crash Experience (Requires 3 criteria analysis by engineering)

Total Number: 0 From: 1/1/2005 to 1/1/2008
Accident Rate: 0.00 per million entering vehicles

Types of Accidents	No.	/	Avg.		No.	/	Avg.
Right Angle	0	/	0.0	Rear End	0	/	0.0
Lost Control	0	/	0.0	Side Swipe	0	/	0.0
Left Turn	0	/	0.0	Other	0	/	0.0

SOUTH CAROLINA DEPARTMENT OF TRANSPORTATION
DISTRICT 1
TRAFFIC ENGINEERING

County: Richland City: Columbia Date: 11/28/2016

Major Rt: Broad River Rd * Not on State System Minor Rt: Dutch Square Blvd * Not on State System

Day of Week: Monday Weather: Clear Office: Short Counts JMS

Type of Control: Signal Speed Limit (major st) 40

Direction of Minor Street: E-W Intersection ADT - 25260 (Calc)

Number of Lanes (major st)* 2 Number of Lanes (minor st)* 1
* Each Direction

INTERSECTION VOLUME SUMMARY

	From N Broad River Rd				From S Broad River Rd				From E Dutch Square Blvd				From W Dutch Square Blvd				Total	Total
	LT	STR	RT	TOT	LT	STR	RT	TOT	LT	STR	RT	TOT	LT	STR	RT	TOT	Vol	Peds
7:00 - 7:15	0	178	28	206	1	99	0	100	0	0	0	0	33	0	2	35	341	1
7:15 - 7:30	0	311	38	349	3	139	0	142	0	0	0	0	40	0	3	43	534	0
7:30 - 7:45	0	168	23	191	5	105	0	110	0	0	0	0	42	0	7	49	350	0
7:45 - 8:00	0	256	39	295	4	146	0	150	0	0	0	0	44	0	16	60	505	0
8:00 - 8:15	0	246	31	277	4	134	0	138	0	0	0	0	38	0	5	43	458	0
8:15 - 8:30	0	267	35	302	0	102	0	102	0	0	0	0	32	0	7	39	443	0
8:30 - 8:45	0	322	41	363	11	148	0	159	0	0	0	0	40	0	13	53	575	0
8:45 - 9:00	0	309	50	359	15	158	0	173	0	0	0	0	42	0	8	50	582	0
9:00 - 9:15	0	218	54	272	7	157	0	164	0	0	0	0	20	0	11	31	467	0
9:15 - 9:30	0	197	57	254	8	121	0	129	0	0	0	0	48	0	19	67	450	0
9:30 - 9:45	0	188	53	241	11	117	0	128	0	0	0	0	60	0	22	82	451	0
9:45 - 10:00	0	195	57	252	18	143	0	161	0	0	0	0	36	0	14	50	463	0
10:00 - 10:15	0	189	41	230	15	157	0	172	0	0	0	0	50	0	14	64	466	0
10:15 - 10:30	0	163	48	211	13	123	0	136	0	0	0	0	35	0	12	47	394	0
10:30 - 10:45	0	171	51	222	17	136	0	153	0	0	0	0	52	0	25	77	452	0
10:45 - 11:00	0	191	59	250	10	138	0	148	0	0	0	0	42	0	18	60	458	0
11:00 - 11:15	0	162	54	216	7	127	0	134	0	0	0	0	54	0	17	71	421	0
11:15 - 11:30	0	161	62	223	13	164	0	177	0	0	0	0	61	0	26	87	487	0
11:30 - 11:45	0	200	67	267	12	187	0	199	0	0	0	0	49	0	17	66	532	0
11:45 - 12:00	0	201	47	248	6	182	0	188	0	0	0	0	80	0	15	95	531	0
12:00 - 12:15	0	194	64	258	16	209	0	225	0	0	0	0	64	0	24	88	571	0
12:15 - 12:30	0	181	60	241	14	157	0	171	0	0	0	0	102	0	22	124	536	1
12:30 - 12:45	0	238	72	310	13	195	0	208	0	0	0	0	74	0	40	114	632	0
12:45 - 13:00	0	202	66	268	12	156	0	168	0	0	0	0	77	0	16	93	529	0
13:00 - 13:15	0	211	71	282	9	147	0	156	0	0	0	0	81	0	11	92	530	0
13:15 - 13:30	0	202	66	268	9	183	0	192	0	0	0	0	79	0	8	87	547	0
13:30 - 13:45	0	145	35	180	5	109	0	114	0	0	0	0	59	0	4	63	357	2
13:45 - 14:00	0	181	53	234	12	181	0	193	0	0	0	0	84	0	13	97	524	2
14:00 - 14:15	0	206	56	262	18	170	0	188	0	0	0	0	82	0	11	93	543	0
14:15 - 14:30	0	185	71	256	6	199	0	205	0	0	0	0	73	0	17	90	551	2
14:30 - 14:45	0	200	55	255	9	208	0	217	0	0	0	0	43	0	17	60	532	0
14:45 - 15:00	0	132	37	169	5	88	0	93	0	0	0	0	54	0	7	61	323	0
15:00 - 15:15	0	208	64	272	10	186	0	196	0	0	0	0	65	0	12	77	545	0
15:15 - 15:30	0	252	76	328	17	235	0	252	0	0	0	0	68	0	15	83	663	1
15:30 - 15:45	0	242	55	297	7	197	0	204	0	0	0	0	61	0	13	74	575	0
15:45 - 16:00	0	163	50	213	12	175	0	187	0	0	0	0	58	0	11	69	469	0
16:00 - 16:15	0	175	45	220	14	182	0	196	0	0	0	0	79	0	8	87	503	0
16:15 - 16:30	0	228	57	285	16	223	0	239	0	0	0	0	63	0	14	77	601	0
16:30 - 16:45	0	204	55	259	12	251	0	263	0	0	0	0	94	0	15	109	631	0
16:45 - 17:00	0	165	47	212	15	263	0	278	0	0	0	0	87	0	11	98	588	0
17:00 - 17:15	0	178	50	228	8	285	0	293	0	0	0	0	120	0	21	141	662	1
17:15 - 17:30	0	200	51	251	17	254	0	271	0	0	0	0	105	0	18	123	645	0
17:30 - 17:45	0	200	51	251	20	255	0	275	0	0	0	0	75	0	15	90	616	0
17:45 - 18:00	0	153	43	196	14	213	0	227	0	0	0	0	84	0	8	92	515	0
18:00 - 18:15	0	155	38	193	12	245	0	257	0	0	0	0	54	0	9	63	513	0
18:15 - 18:30	0	147	30	177	10	159	0	169	0	0	0	0	47	0	6	53	399	0
18:30 - 18:45	0	147	42	189	8	155	0	163	0	0	0	0	66	0	11	77	429	1
18:45 - 19:00	0	128	37	165	9	144	0	153	0	0	0	0	58	0	12	70	388	0
TOTAL	0	9515	2432	11947	509	8207	0	8716	0	0	0	0	2954	0	660	3614	24277	11
Trucks	0	34	9	43	2	31	0	33	0	0	0	0	7	0	3	10	86	0.4%
School Buses	0	38	25	63	0	43	0	43	0	0	0	0	19	0	6	25	131	0.5%

TOTAL AND PEAK HOUR VOLUME DIAGRAMS

Broad River Rd AT Dutch Square Blvd Date: 11/28/2016

12.0 HOUR TOTAL VOLUME
FROM 7:00 TO 15:00

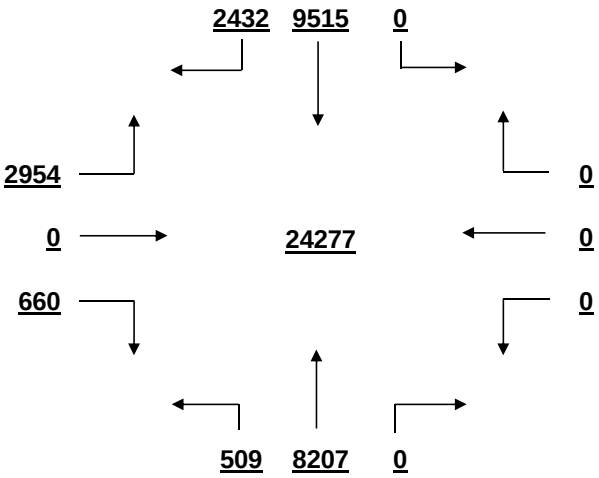

OVERALL PEAK HOUR VOLUME
FROM 16:30 TO 17:30

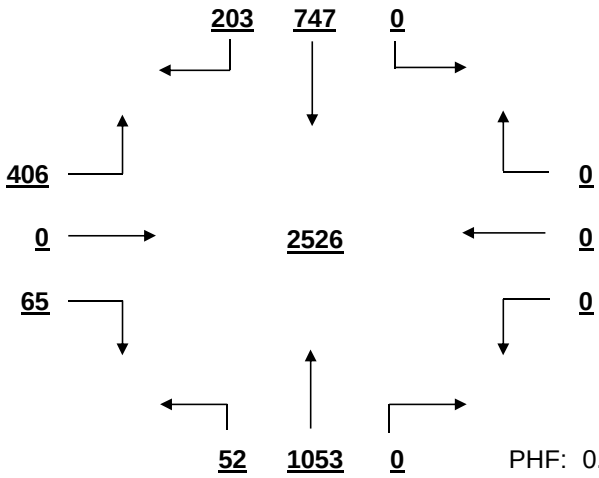

PHF: 0.954

AM PEAK HOUR VOLUME (0:00-10:45)
FROM 8:30 TO 9:30

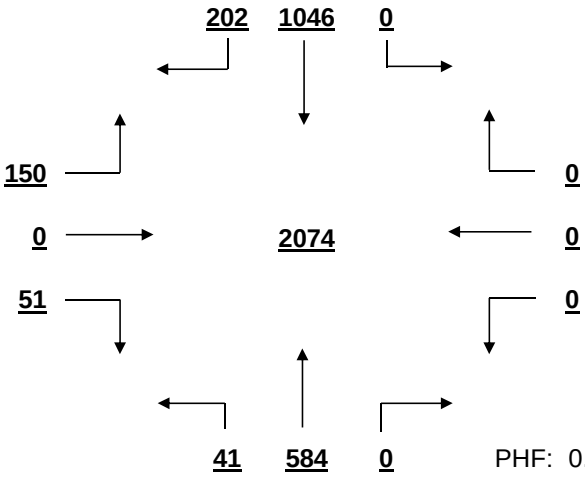

PHF: 0.891

PM PEAK HOUR VOLUME (14:15-23:45)
FROM 16:30 TO 17:30

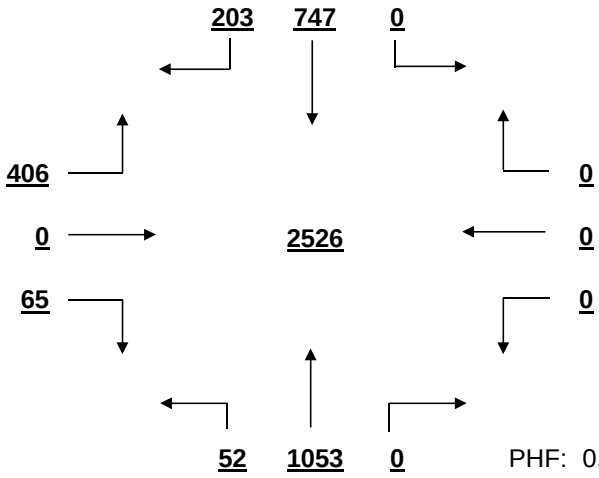

PHF: 0.954

MID-DAY PEAK HOUR VOLUME (11:00-14:00)
FROM 11:45 TO 12:45

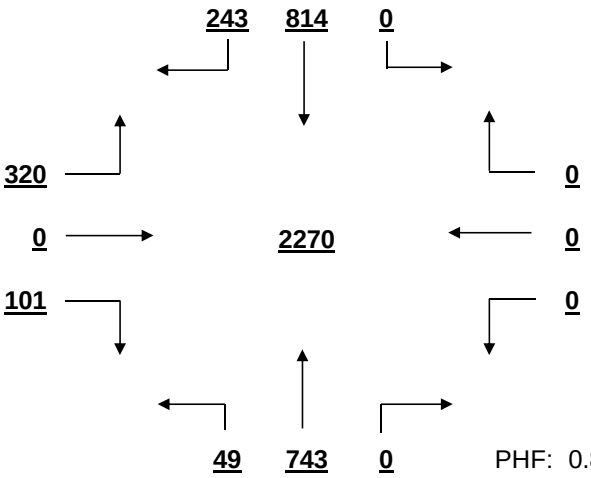

PHF: 0.898

OTHER HOUR VOLUME
FROM 7:00 TO 8:00

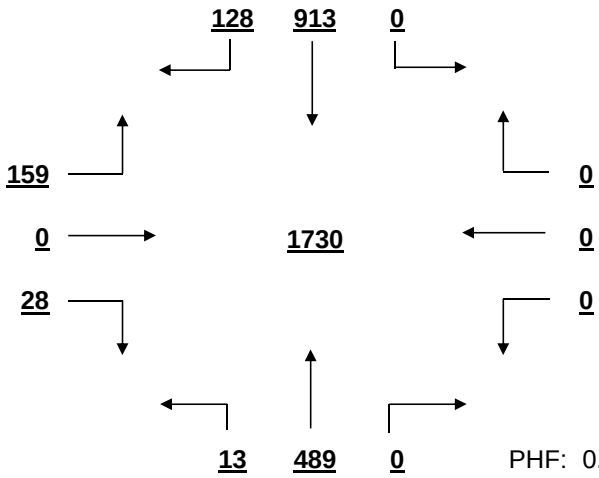

PHF: 0.810

SIGNAL WARRANT ANALYSIS

Broad River Rd AT Dutch Square Blvd Date: 11/28/2016

Minor Street Volume, percent of total = 14.9%
Percent of Left Turns from Minor Street = 81.7%
Percent of Right Turns from Minor Street = 18.3%
Percent of Minor Street Right Turns to Remove from Warrant Analysis = 0%
WARRANT BASIS = **100%**

Warrant No. 1 - Vehicular Volume is met

Condition A - Minimum Vehicular Volume is met

Average Major Street % of Warrant				Average Minor Street % of Warrant			
1721.9	/ 600	=	287%	301.2	/ 150	=	201%

Hourly percent of warrant

	7:00-8:00	8:00-9:00	9:00-10:00	10:00-11:00	11:00-12:00	12:00-13:00	13:00-14:00	14:00-15:00	15:00-16:00	16:00-17:00	17:00-18:00	18:00-19:00
Major St.	257%	312%	267%	254%	275%	308%	270%	274%	325%	325%	332%	244%
Minor St.	125%	123%	153%	165%	213%	279%	226%	203%	202%	247%	297%	175%

Condition B - Interruption to Continuous Traffic is met

Average Major Street % of Warrant				Average Minor Street % of Warrant			
1721.9	/ 900	=	191%	301.2	/ 75	=	402%

Hourly percent of warrant

	7:00-8:00	8:00-9:00	9:00-10:00	10:00-11:00	11:00-12:00	12:00-13:00	13:00-14:00	14:00-15:00	15:00-16:00	16:00-17:00	17:00-18:00	18:00-19:00
Major St.	171%	208%	178%	169%	184%	205%	180%	183%	217%	217%	221%	163%
Minor St.	249%	247%	307%	331%	425%	559%	452%	405%	404%	495%	595%	351%

80% Combination of Conditions A & B is met

Warrant No. 2 - Four Hour Vehicular Volume is met

Hourly percent of warrant

	7:00-8:00	8:00-9:00	9:00-10:00	10:00-11:00	11:00-12:00	12:00-13:00	13:00-14:00	14:00-15:00	15:00-16:00	16:00-17:00	17:00-18:00	18:00-19:00
Minor St.	234%	231%	288%	310%	399%	524%	424%	380%	379%	464%	558%	329%

Warrant No. 3 - Peak Hour is met

Percent of warrant
Overall Peak Hour: 16:30-17:30
Minor St. 471%

Percent of warrant
Higher Volume Side Street Peak Hour: 16:30-17:30
Minor St. 471%

Warrant No. 4 - Pedestrian Volume. Pedestrian volume shown are minumum volumes assuming heavy major street traffic. If these volumes are met, warrant 4 requires further engineering analysis

S

Minimum 4 hour ped. volume crossing major street: 107

Minimum peak hour ped. volume crossing major street: 133

Number of pedestrians crossing major street

	7:00-8:00	8:00-9:00	9:00-10:00	10:00-11:00	11:00-12:00	12:00-13:00	13:00-14:00	14:00-15:00	15:00-16:00	16:00-17:00	17:00-18:00	18:00-19:00
Major t.	0	0	0	0	0	0	0	0	0	0	0	0

Warrant No. 7 - Crash Experience (Requires 3 criteria analysis by engineering)

Total Number: 0 From: 1/1/2005 to 1/1/2008
Accident Rate: 0.00 per million entering vehicles

Types of Accidents	No.	/	Avg.		No.	/	Avg.
Right Angle	0	/	0.0	Rear End	0	/	0.0
Lost Control	0	/	0.0	Side Swipe	0	/	0.0
Left Turn	0	/	0.0	Other	0	/	0.0

SOUTH CAROLINA DEPARTMENT OF TRANSPORTATION
DISTRICT 1
TRAFFIC ENGINEERING

County: Richland City: Columbia Date: 12/2/2016

Major Rt: Broad River Rd * Not on State System Minor Rt: Omarest Dr-Private Dr Clear

Day of Week: Friday Weather: Clear Office: Short Counts JMS

Type of Control: Signal Speed Limit (major st) 40

Direction of Minor Street: E-W Intersection ADT - 24170 (Calc)

Number of Lanes (major st)* 2 Number of Lanes (minor st)* 1 * Each Direction

INTERSECTION VOLUME SUMMARY

	From N Broad River Rd				From S Broad River Rd				From E Omarest Dr-Private				From W Omarest Dr-Private				Total	Total
	LT	STR	RT	TOT	LT	STR	RT	TOT	LT	STR	RT	TOT	LT	STR	RT	TOT	Vol	Peds
7:00 - 7:15	5	262	0	267	0	140	5	145	23	0	8	31	0	0	0	0	443	1
7:15 - 7:30	5	321	0	326	1	156	10	167	24	0	8	32	0	0	0	0	525	0
7:30 - 7:45	5	309	3	317	0	198	14	212	17	0	5	22	0	0	2	2	553	1
7:45 - 8:00	9	259	2	270	2	183	8	193	26	0	10	36	0	0	3	3	502	2
8:00 - 8:15	8	246	0	254	1	149	9	159	14	0	10	24	0	0	1	1	438	3
8:15 - 8:30	4	261	0	265	2	154	8	164	16	0	5	21	0	0	1	1	451	0
8:30 - 8:45	7	245	0	252	3	170	7	180	7	0	7	14	1	0	1	2	448	4
8:45 - 9:00	6	204	0	210	5	170	7	182	23	0	8	31	1	0	2	3	426	3
9:00 - 9:15	9	222	1	232	2	162	8	172	10	0	8	18	0	1	3	4	426	2
9:15 - 9:30	5	194	1	200	4	165	7	176	19	0	10	29	0	0	5	5	410	4
9:30 - 9:45	4	224	1	229	3	192	8	203	10	0	5	15	1	0	7	8	455	3
9:45 - 10:00	4	197	2	203	7	187	13	207	8	0	8	16	1	0	5	6	432	4
10:00 - 10:15	4	208	2	214	0	183	0	183	10	0	6	16	0	0	6	6	419	6
10:15 - 10:30	8	197	1	206	7	173	10	190	9	0	7	16	0	0	7	7	419	7
10:30 - 10:45	12	215	1	228	3	187	8	198	11	0	5	16	0	0	1	1	443	5
10:45 - 11:00	7	188	3	198	3	203	10	216	12	1	6	19	1	0	0	1	434	2
11:00 - 11:15	7	212	0	219	0	204	9	213	8	0	10	18	0	0	2	2	452	0
11:15 - 11:30	4	196	2	202	8	216	12	236	13	0	7	20	1	0	3	4	462	3
11:30 - 11:45	6	207	0	213	2	257	14	273	15	0	7	22	0	0	4	4	512	2
11:45 - 12:00	3	231	2	236	7	221	14	242	15	1	4	20	0	0	3	3	501	0
12:00 - 12:15	6	213	2	221	3	270	14	287	12	1	5	18	0	0	3	3	529	5
12:15 - 12:30	5	257	2	264	5	269	11	285	17	2	5	24	0	0	6	6	579	8
12:30 - 12:45	7	254	2	263	7	247	8	262	14	0	7	21	0	0	5	5	551	0
12:45 - 13:00	4	222	3	229	6	273	13	292	4	1	3	8	0	1	3	4	533	2
13:00 - 13:15	8	271	0	279	4	267	10	281	11	1	12	24	0	1	10	11	595	2
13:15 - 13:30	8	265	2	275	6	221	17	244	10	0	9	19	0	1	5	6	544	3
13:30 - 13:45	12	259	0	271	2	286	10	298	14	0	12	26	1	0	11	12	607	2
13:45 - 14:00	9	239	1	249	3	276	17	296	17	0	12	29	0	0	6	6	580	4
14:00 - 14:15	7	244	0	251	4	278	18	300	11	1	8	20	0	0	7	7	578	2
14:15 - 14:30	10	265	1	276	3	232	8	243	14	0	8	22	0	0	0	0	541	4
14:30 - 14:45	10	230	3	243	2	262	15	279	12	1	7	20	0	0	4	4	546	2
14:45 - 15:00	11	249	2	262	6	275	17	298	8	0	10	18	0	0	6	6	584	2
15:00 - 15:15	11	220	0	231	4	259	18	281	21	4	10	35	1	1	3	5	552	5
15:15 - 15:30	9	0	0	9	4	280	25	309	16	0	7	23	0	0	4	4	345	1
15:30 - 15:45	16	210	3	229	3	281	19	303	7	1	6	14	0	0	9	9	555	6
15:45 - 16:00	10	206	0	216	6	289	24	319	18	2	7	27	1	0	5	6	568	5
16:00 - 16:15	10	219	0	229	1	299	23	323	12	0	4	16	2	1	9	12	580	12
16:15 - 16:30	7	223	1	231	2	321	24	347	13	0	7	20	0	0	5	5	603	13
16:30 - 16:45	8	187	1	196	8	315	20	343	16	3	2	21	0	0	6	6	566	11
16:45 - 17:00	14	213	1	228	5	334	36	375	11	2	8	21	0	1	9	10	634	6
17:00 - 17:15	14	210	4	228	9	316	27	352	17	1	9	27	0	2	5	7	614	10
17:15 - 17:30	10	194	2	206	13	295	23	331	16	2	5	23	1	0	5	6	566	0
17:30 - 17:45	13	184	0	197	5	275	21	301	12	0	13	25	0	0	5	5	528	4
17:45 - 18:00	11	186	3	200	9	300	38	347	16	0	9	25	0	1	6	7	579	0
18:00 - 18:15	8	183	0	191	7	290	39	336	19	1	13	33	0	1	4	5	565	2
18:15 - 18:30	5	0	1	6	4	252	17	273	15	0	8	23	0	0	3	3	305	0
18:30 - 18:45	13	173	1	187	6	229	14	249	18	2	9	29	0	1	6	7	472	0
18:45 - 19:00	11	203	1	215	0	187	12	199	13	0	4	17	0	0	3	3	434	1
TOTAL	389	10377	57	10823	197	11348	719	12264	674	27	363	1064	12	12	209	233	24384	164
Trucks	3	103	1	107	3	122	1	126	5	1	8	14	0	1	3	4	251	1.0%
School Buses	2	53	1	56	2	61	4	67	3	0	0	3	0	1	0	1	127	0.5%

TOTAL AND PEAK HOUR VOLUME DIAGRAMS

Broad River Rd AT Omarest Dr-Private Dr Date: 12/2/2016

12.0 HOUR TOTAL VOLUME
FROM 7:00 TO 15:00

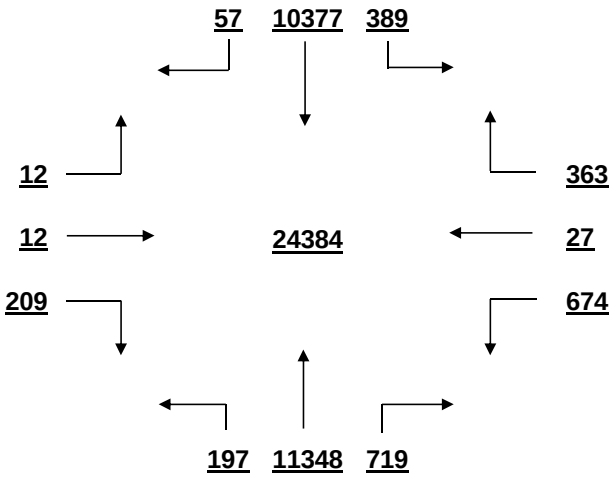

OVERALL PEAK HOUR VOLUME
FROM 16:15 TO 17:15

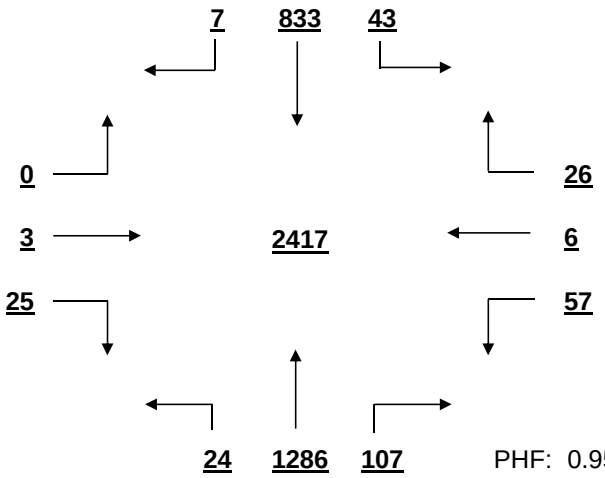

PHF: 0.953

AM PEAK HOUR VOLUME (0:00-10:45)
FROM 7:00 TO 8:00

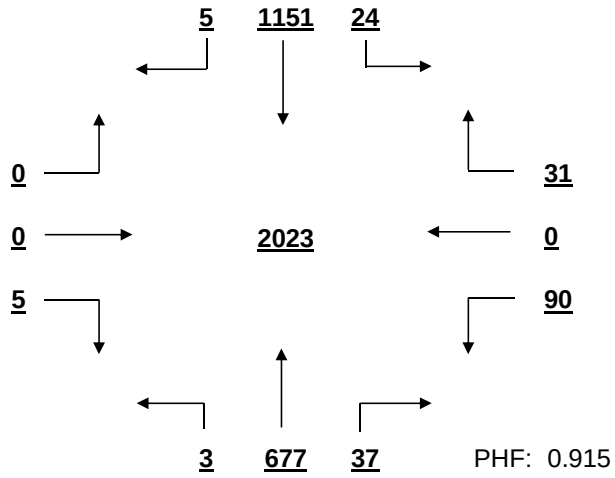

PHF: 0.915

PM PEAK HOUR VOLUME (14:15-23:45)
FROM 16:15 TO 17:15

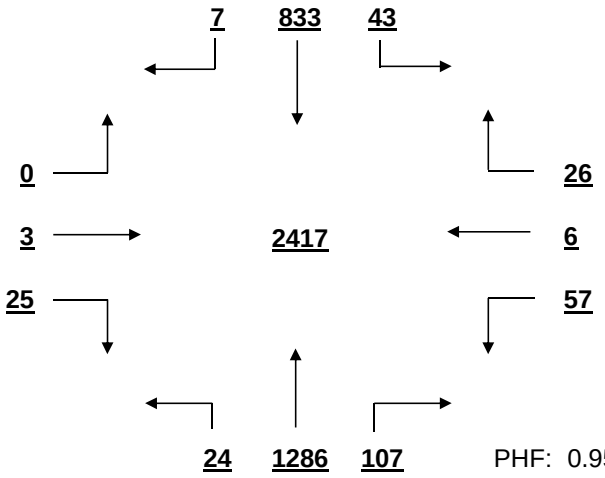

PHF: 0.953

MID-DAY PEAK HOUR VOLUME (11:00-14:00)
FROM 13:00 TO 14:00

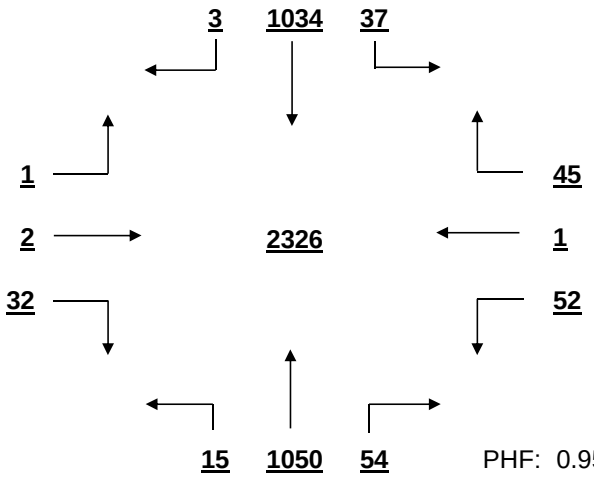

PHF: 0.958

OTHER HOUR VOLUME
FROM 7:00 TO 8:00

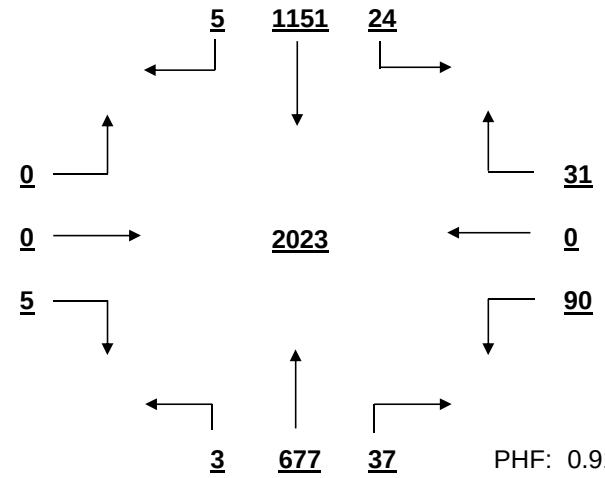

PHF: 0.915

SIGNAL WARRANT ANALYSIS

Broad River Rd AT Omarest Dr-Private Dr Date: 12/2/2016

Minor Street Volume, percent of total = 5.3%
Percent of Left Turns from Minor Street = 52.9%
Percent of Right Turns from Minor Street = 44.1%
Percent of Minor Street Right Turns to Remove from Warrant Analysis = 0%
WARRANT BASIS = **100%**

Warrant No. 1 - Vehicular Volume is met

Condition A - Minimum Vehicular Volume is not met

Average Major Street % of Warrant				Average Minor Street % of Warrant			
1923.9	/ 600	=	321%	88.7	/ 150	=	59%

Hourly percent of warrant

	7:00 - 8:00	8:00 - 9:00	9:00 - 10:00	10:00 - 11:00	11:00 - 12:00	12:00 - 13:00	13:00 - 14:00	14:00 - 15:00	15:00 - 16:00	16:00 - 17:00	17:00 - 18:00	18:00 - 19:00
Major St.	316%	278%	270%	272%	306%	351%	366%	359%	316%	379%	360%	276%
Minor St.	81%	60%	52%	45%	53%	47%	65%	53%	66%	52%	67%	68%

Condition B - Interruption to Continuous Traffic is met

Average Major Street % of Warrant				Average Minor Street % of Warrant			
1923.9	/ 900	=	214%	88.7	/ 75	=	118%

Hourly percent of warrant

	7:00 - 8:00	8:00 - 9:00	9:00 - 10:00	10:00 - 11:00	11:00 - 12:00	12:00 - 13:00	13:00 - 14:00	14:00 - 15:00	15:00 - 16:00	16:00 - 17:00	17:00 - 18:00	18:00 - 19:00
Major St.	211%	185%	180%	181%	204%	234%	244%	239%	211%	252%	240%	184%
Minor St.	161%	120%	104%	89%	107%	95%	131%	107%	132%	104%	133%	136%

80% Combination of Conditions A & B is not met

Warrant No. 2 - Four Hour Vehicular Volume is met

Hourly percent of warrant

	7:00 - 8:00	8:00 - 9:00	9:00 - 10:00	10:00 - 11:00	11:00 - 12:00	12:00 - 13:00	13:00 - 14:00	14:00 - 15:00	15:00 - 16:00	16:00 - 17:00	17:00 - 18:00	18:00 - 19:00
Minor St.	151%	113%	98%	84%	100%	89%	123%	100%	124%	98%	125%	128%

Warrant No. 3 - Peak Hour is met

		Percent of warrant			Percent of warrant
Overall Peak Hour:	16:15 - 17:15		Higher Volume Side Street Peak Hour:	7:00 - 8:00	
Minor St.		89%	Minor St.		121%

Warrant No. 4 - Pedestrian Volume. Pedestrian volume shown are minumum volumes assuming heavy major street traffic. If these volumes are met, warrant 4 requires further engineering analysis

S

Minimum 4 hour ped. volume crossing major street: 107

Minimum peak hour ped. volume crossing major street: 133

Number of pedestrians crossing major street

	7:00 - 8:00	8:00 - 9:00	9:00 - 10:00	10:00 - 11:00	11:00 - 12:00	12:00 - 13:00	13:00 - 14:00	14:00 - 15:00	15:00 - 16:00	16:00 - 17:00	17:00 - 18:00	18:00 - 19:00
Major t.	1	1	2	2	0	3	0	3	4	16	3	1

Warrant No. 7 - Crash Experience (Requires 3 criteria analysis by engineering)

Total Number: 0 From: 1/1/2005 to 1/1/2008

Accident Rate: 0.00 per million entering vehicles

Types of Accidents	No.	/	Avg.		No.	/	Avg.
Right Angle	0	/	0.0	Rear End	0	/	0.0
Lost Control	0	/	0.0	Side Swipe	0	/	0.0
Left Turn	0	/	0.0	Other	0	/	0.0

Appendix B—2040 Peak Hour Volumes

TransModeler 2040 No-Build
Peak Hour Volumes

Carolina Crossroads
2040 No-Build Interchange Volumes

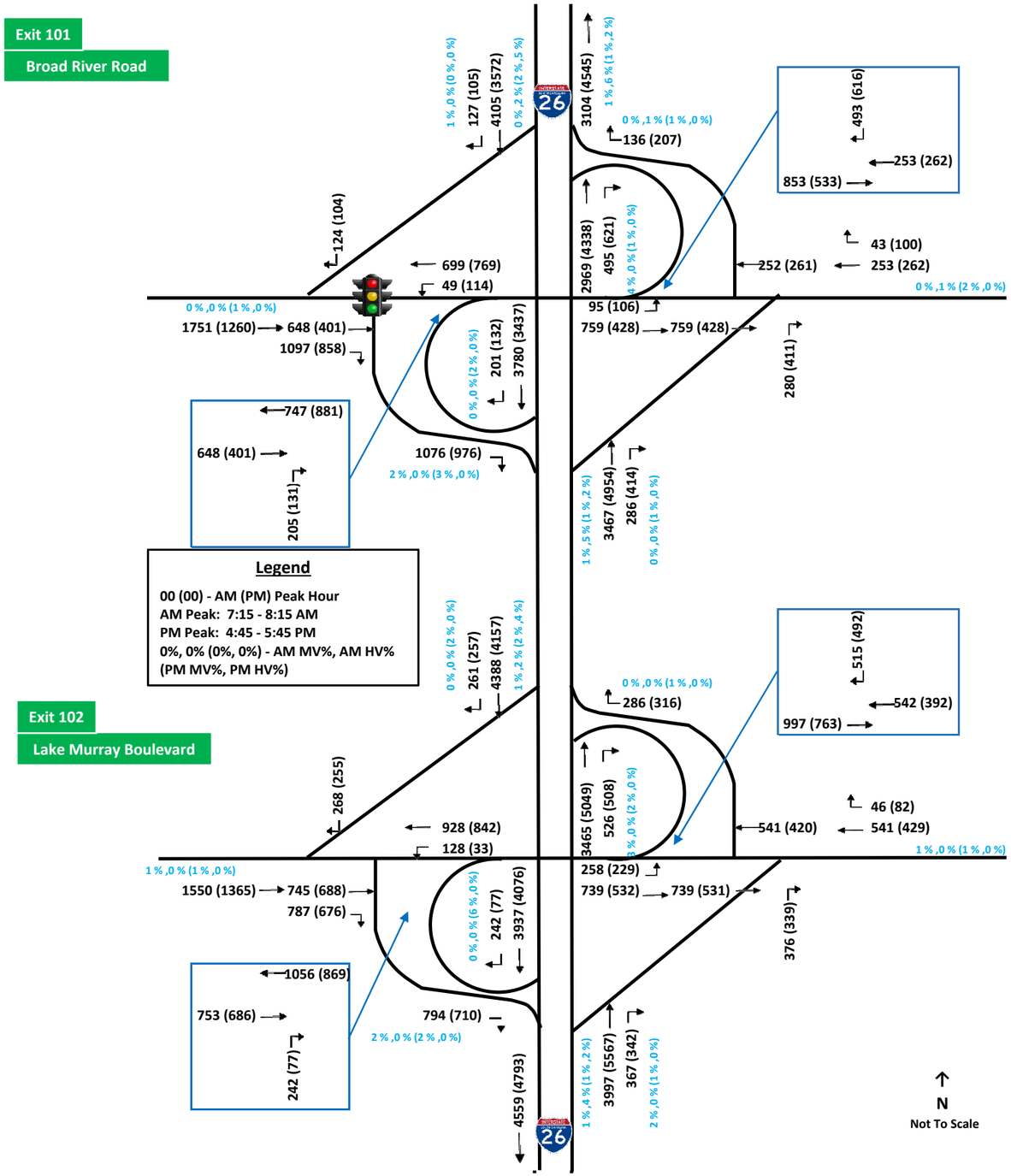

Carolina Crossroads
2040 No-Build Interchange Volumes

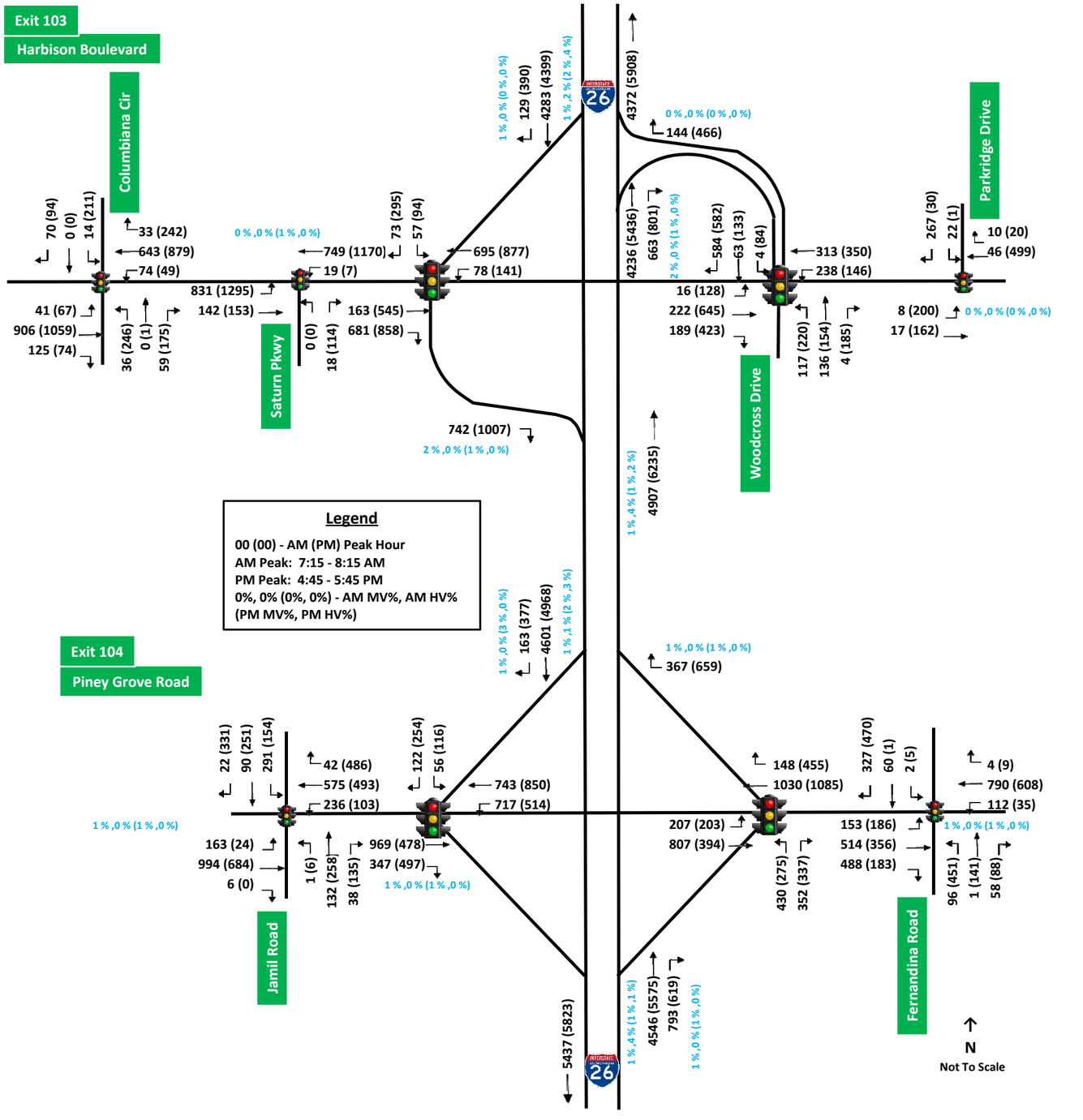

Carolina Crossroads
2040 No-Build Interchange Volumes

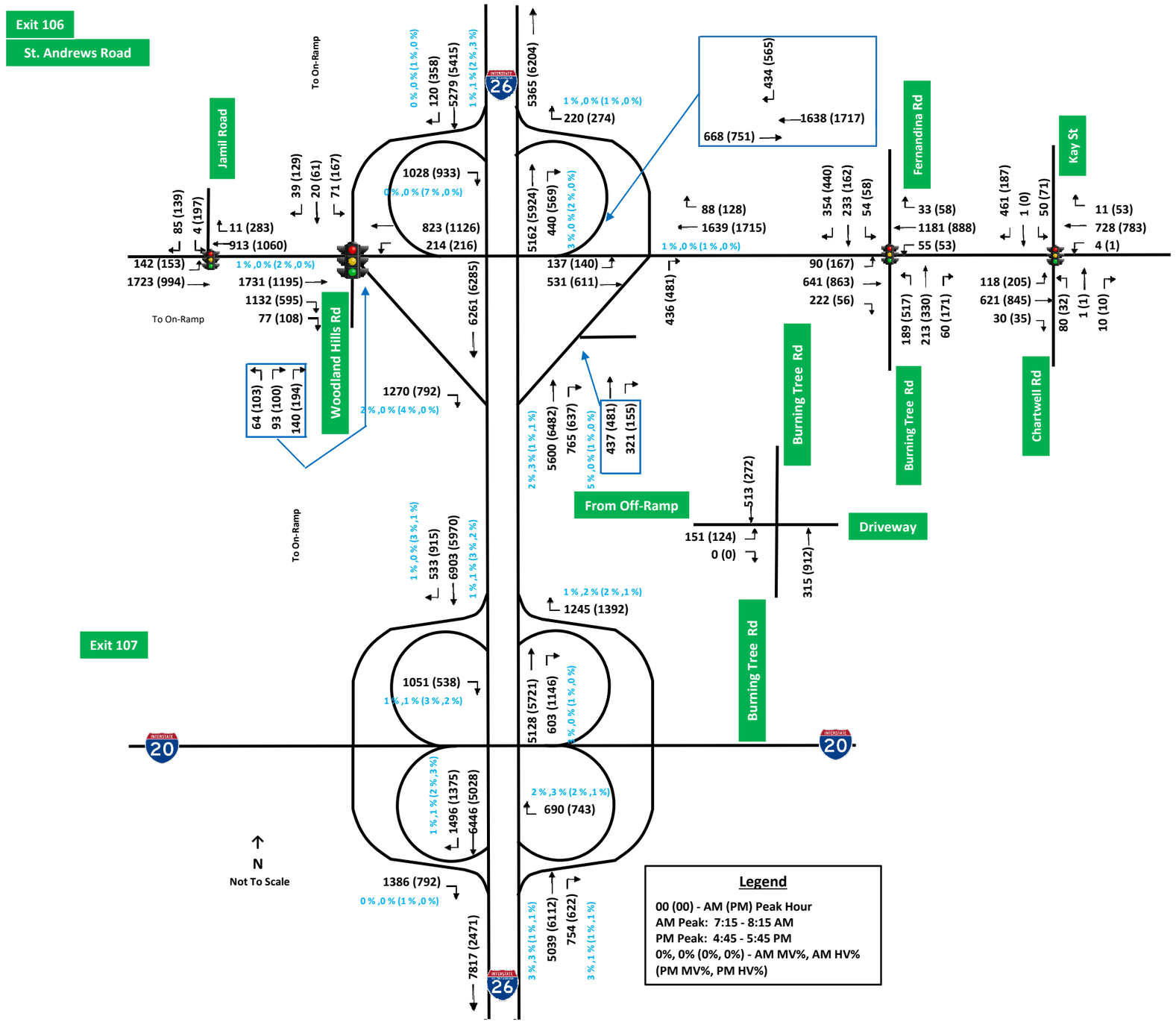

Carolina Crossroads
2040 No-Build Interchange Volumes

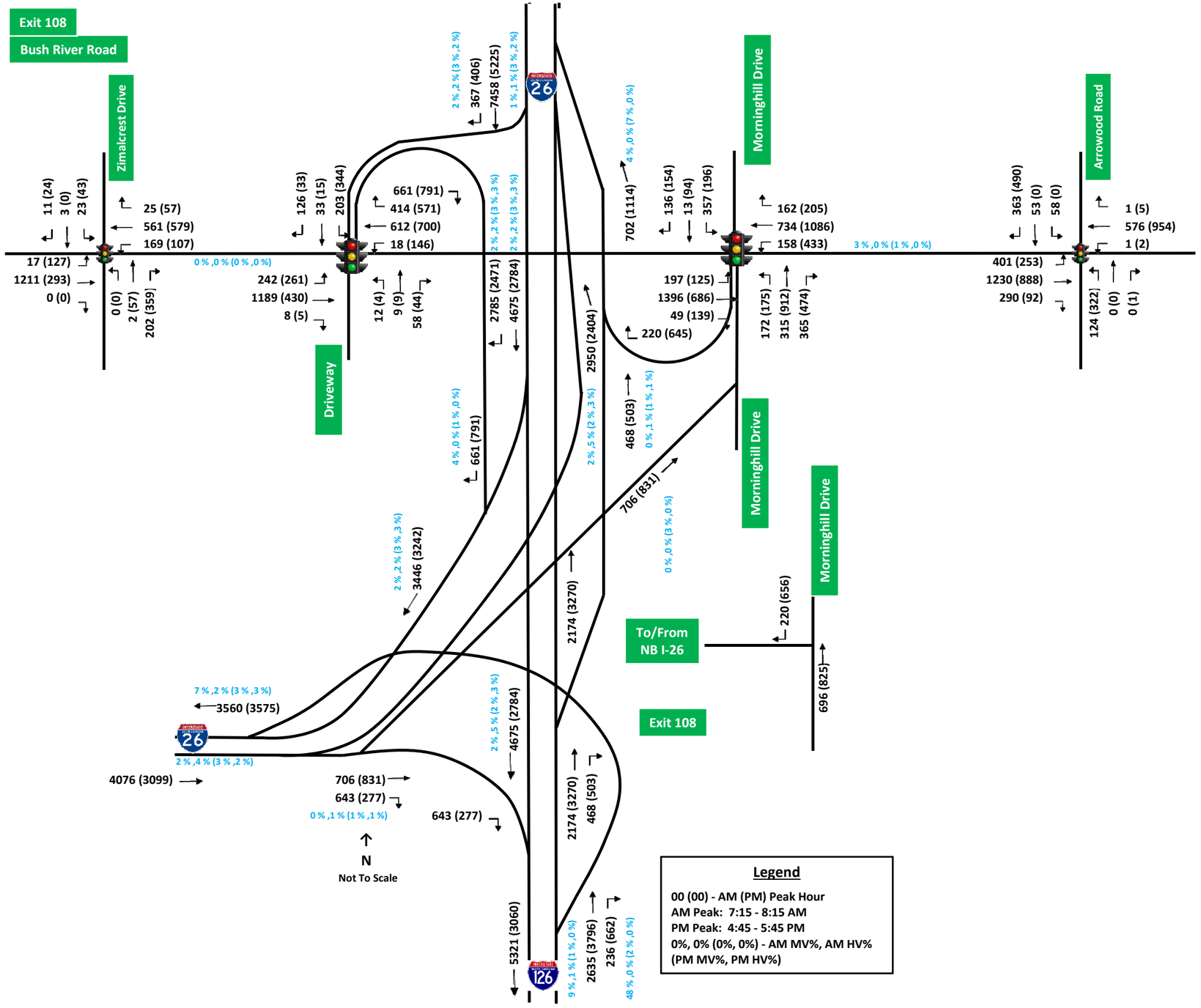

Legend

00 (00) - AM (PM) Peak Hour
AM Peak: 7:15 - 8:15 AM
PM Peak: 4:45 - 5:45 PM
0%, 0% (0%, 0%) - AM MV%, AM HV%
(PM MV%, PM HV%)

Carolina Crossroads
2040 No-Build Interchange Volumes

Exit 110
Sunset Boulevard

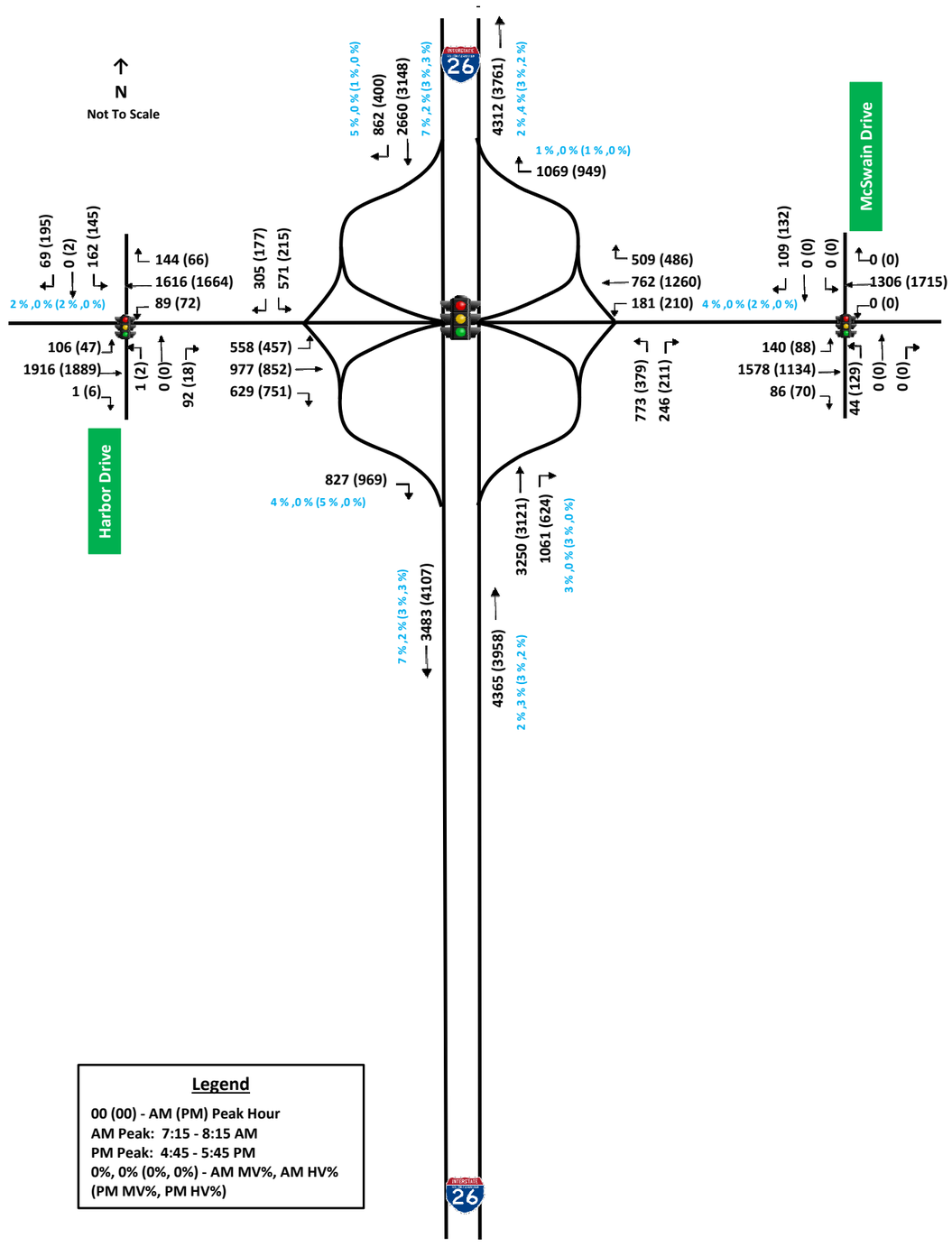

Legend

00 (00) - AM (PM) Peak Hour
AM Peak: 7:15 - 8:15 AM
PM Peak: 4:45 - 5:45 PM
0%, 0% (0%, 0%) - AM MV%, AM HV%
(PM MV%, PM HV%)

Carolina Crossroads
2040 No-Build Interchange Volumes

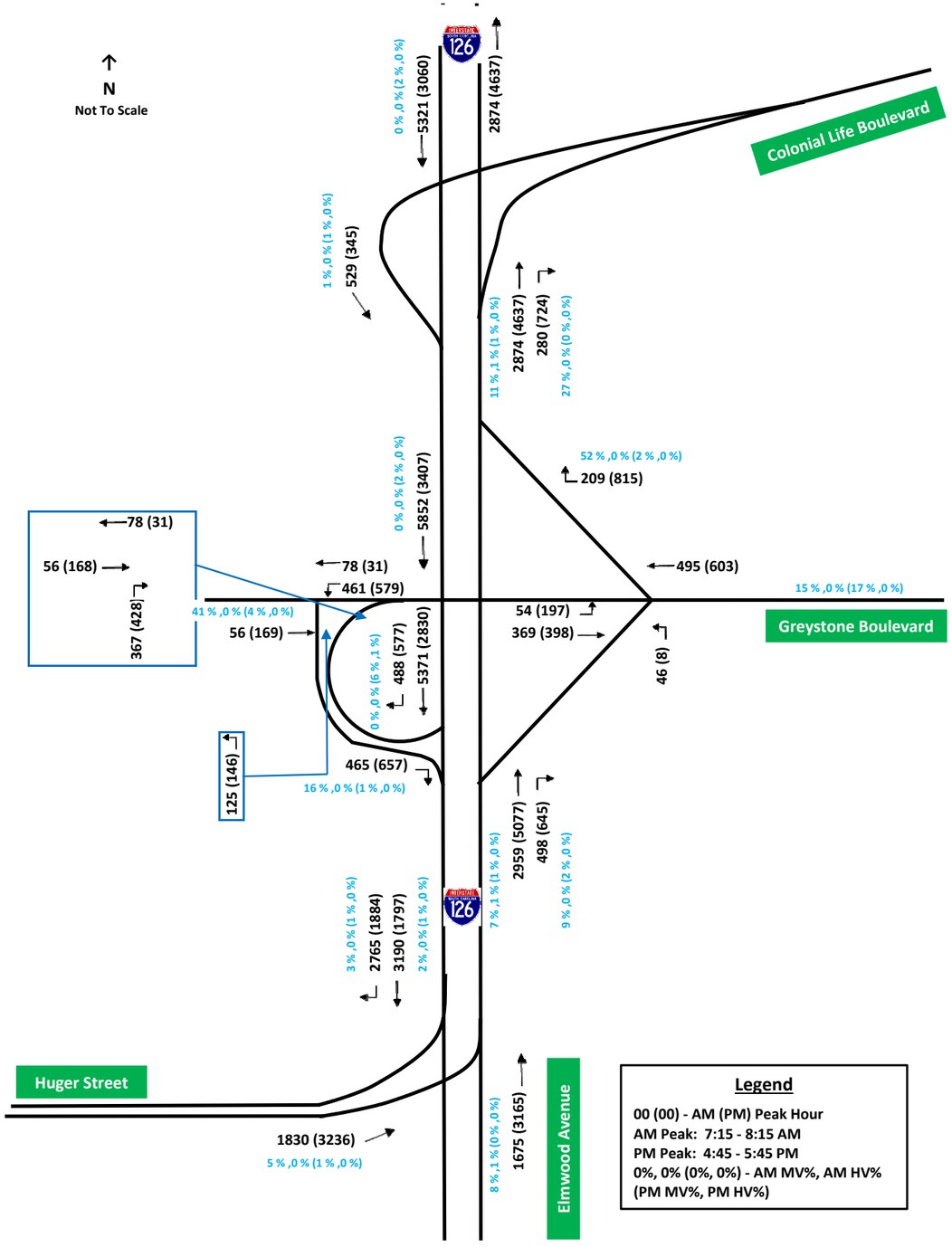

Carolina Crossroads
2040 No-Build Interchange Volumes

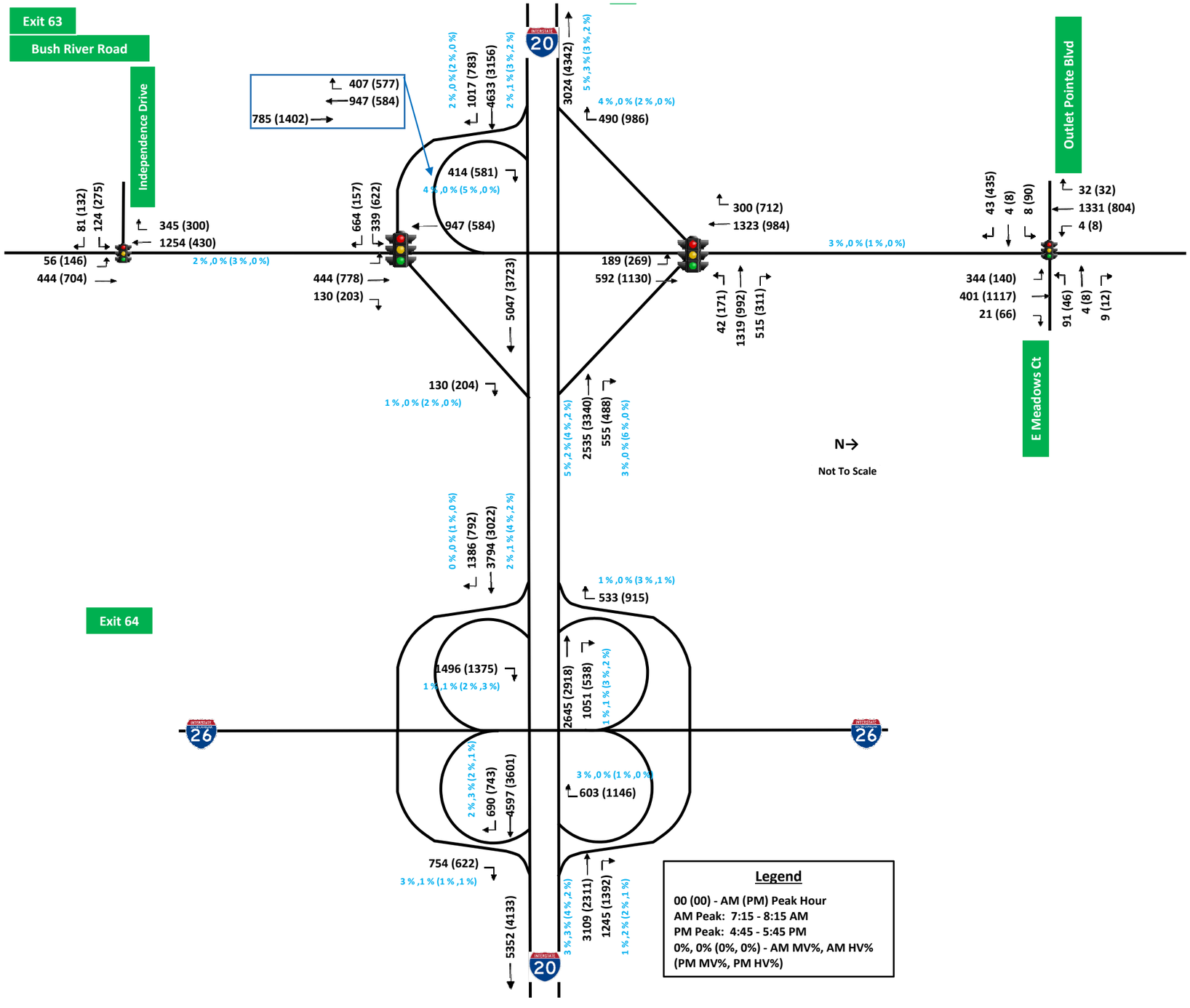

Carolina Crossroads
2040 No-Build Interchange Volumes

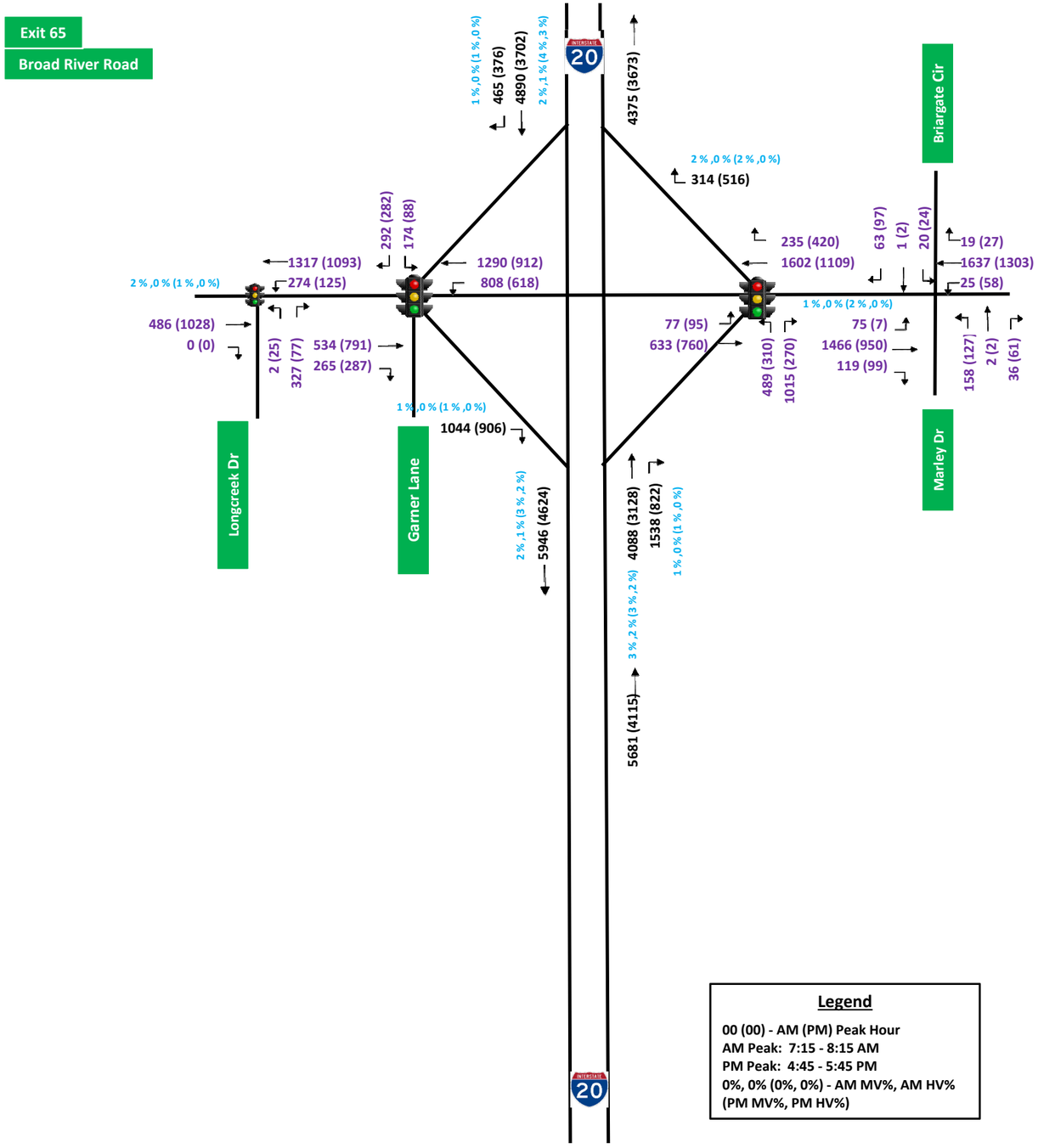

Legend

00 (00) - AM (PM) Peak Hour
AM Peak: 7:15 - 8:15 AM
PM Peak: 4:45 - 5:45 PM
0%, 0% (0%, 0%) - AM MV%, AM HV%
(PM MV%, PM HV%)

TransModeler 2040 Build RRPA
Peak Hour Volumes

Carolina Crossroads
2040 RRPA Interchange Volumes

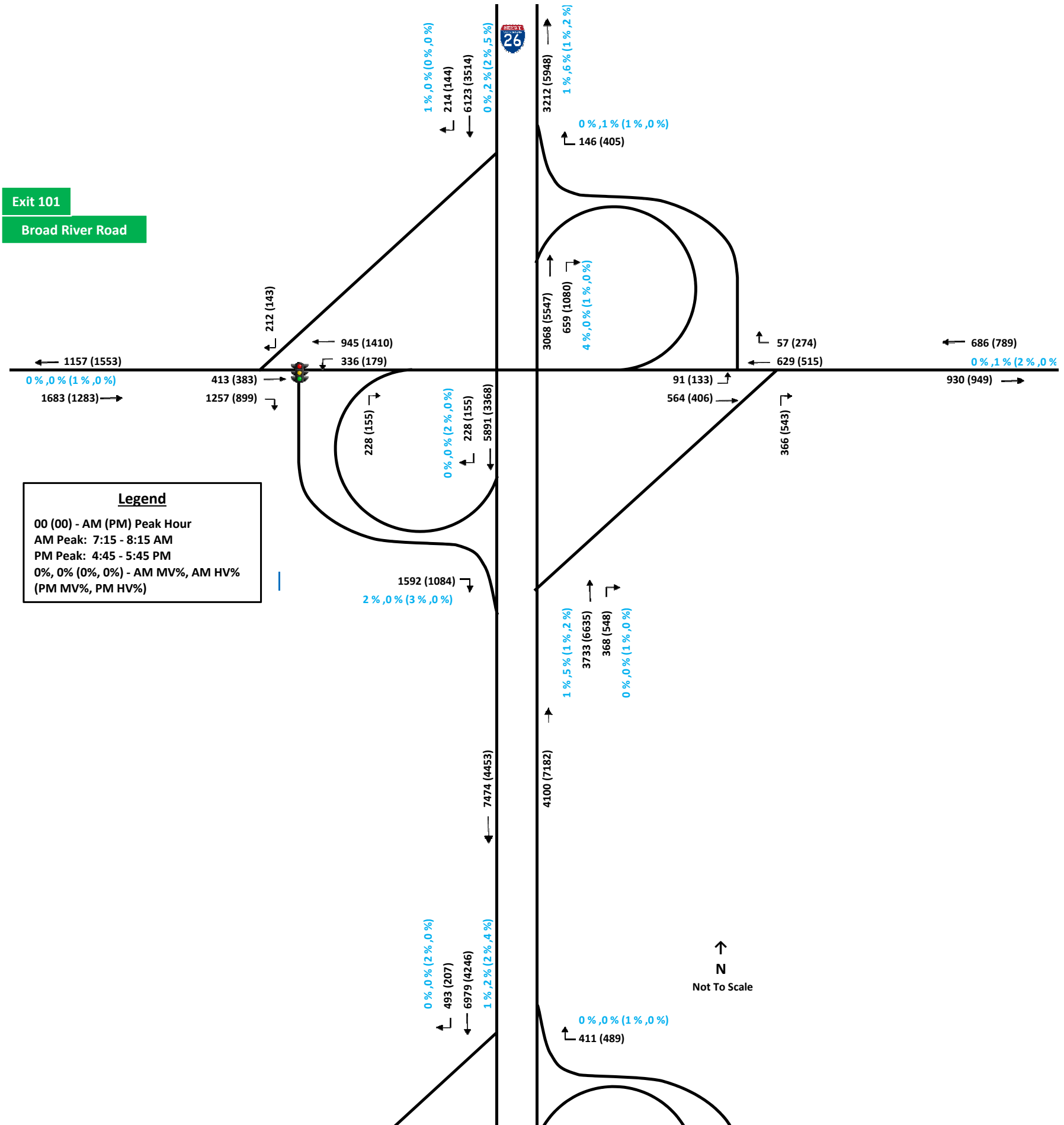

Carolina Crossroads
2040 RRPA Interchange Volumes

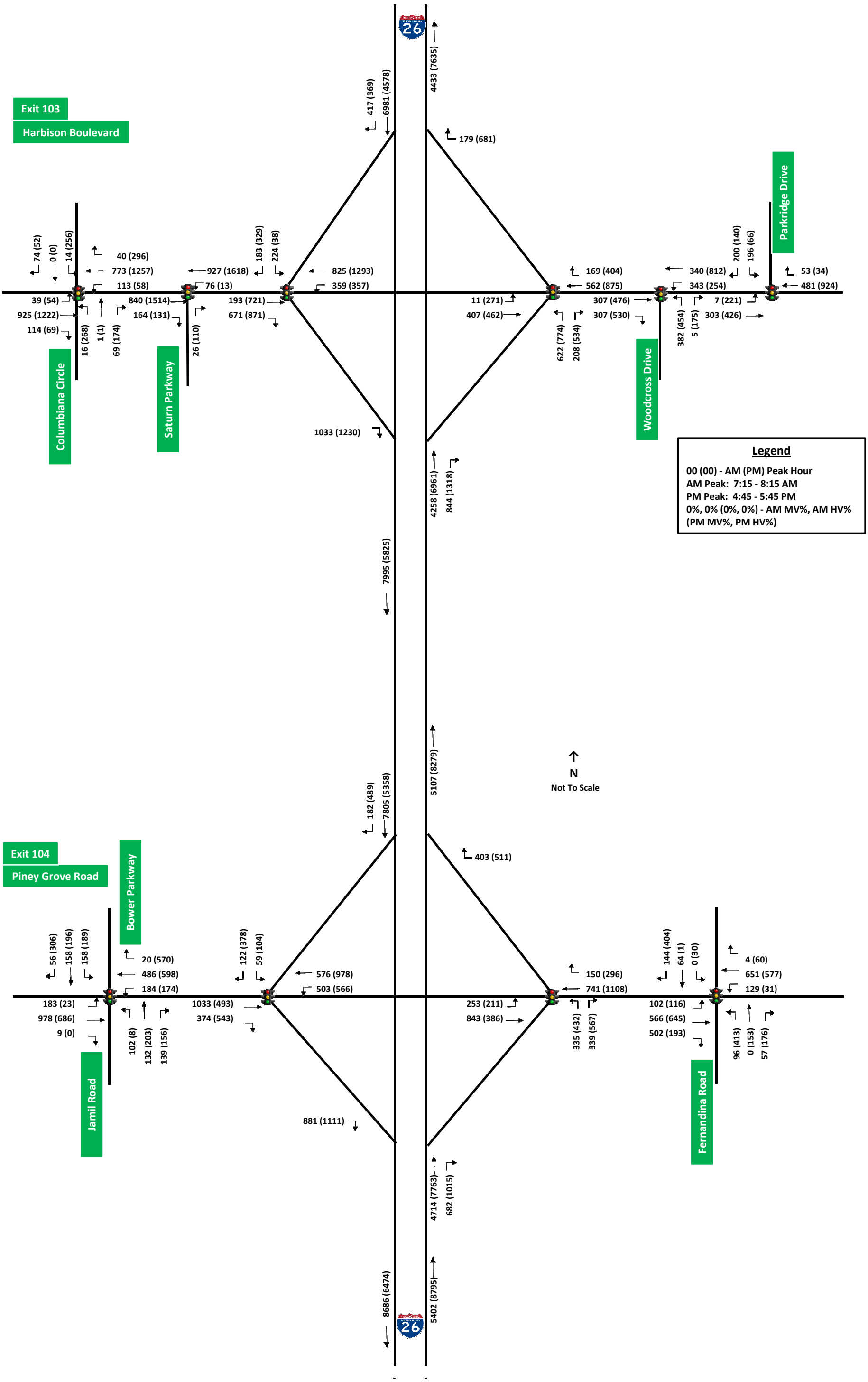

Legend

00 (00) - AM (PM) Peak Hour
AM Peak: 7:15 - 8:15 AM
PM Peak: 4:45 - 5:45 PM
0%, 0% (0%, 0%) - AM MV%, AM HV%
(PM MV%, PM HV%)

Carolina Crossroads
2040 RRPA Interchange Volumes

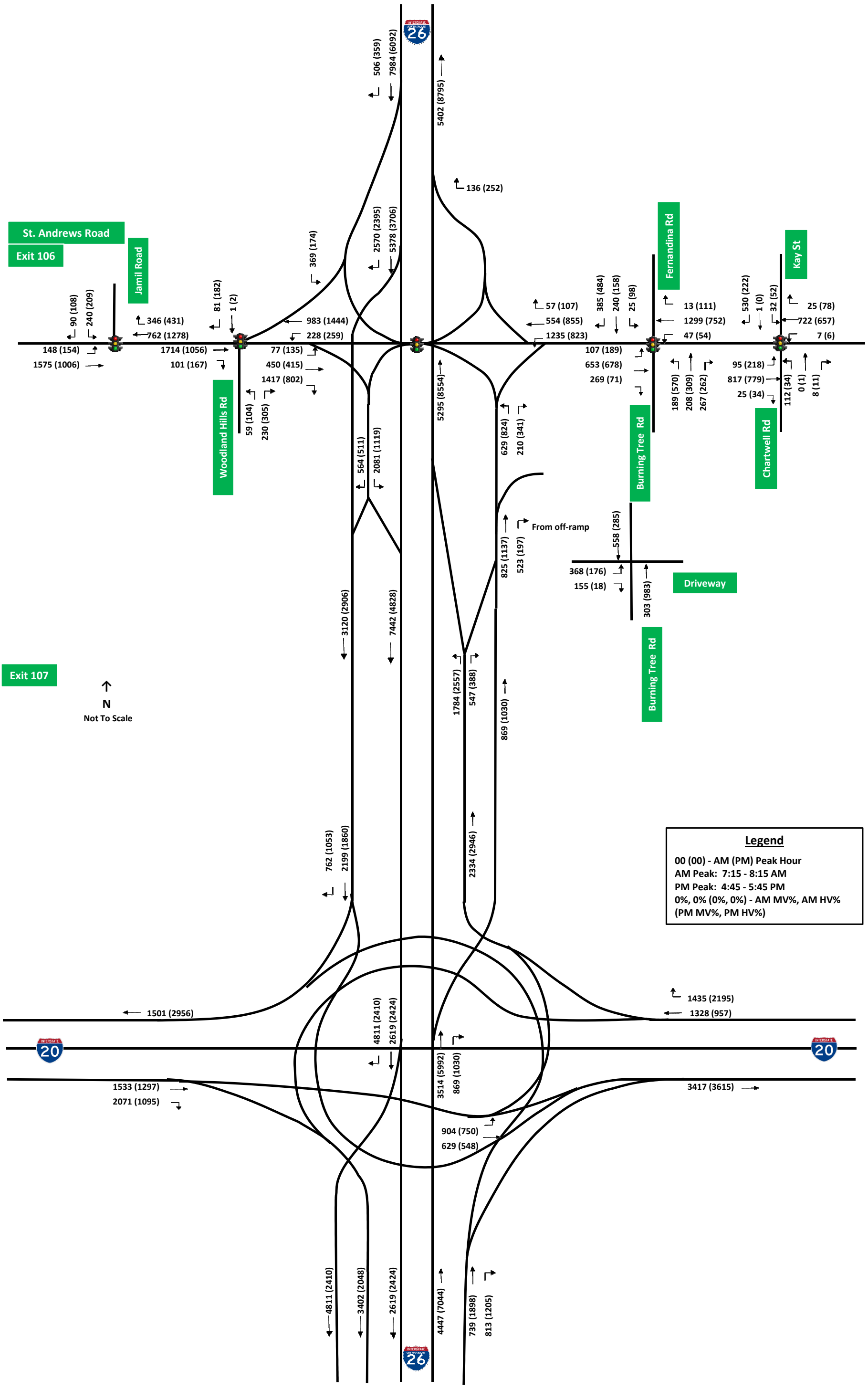

Legend

00 (00) - AM (PM) Peak Hour
AM Peak: 7:15 - 8:15 AM
PM Peak: 4:45 - 5:45 PM
0%, 0% (0%, 0%) - AM MV%, AM HV%
(PM MV%, PM HV%)

Carolina Crossroads
2040 RRPA Interchange Volumes

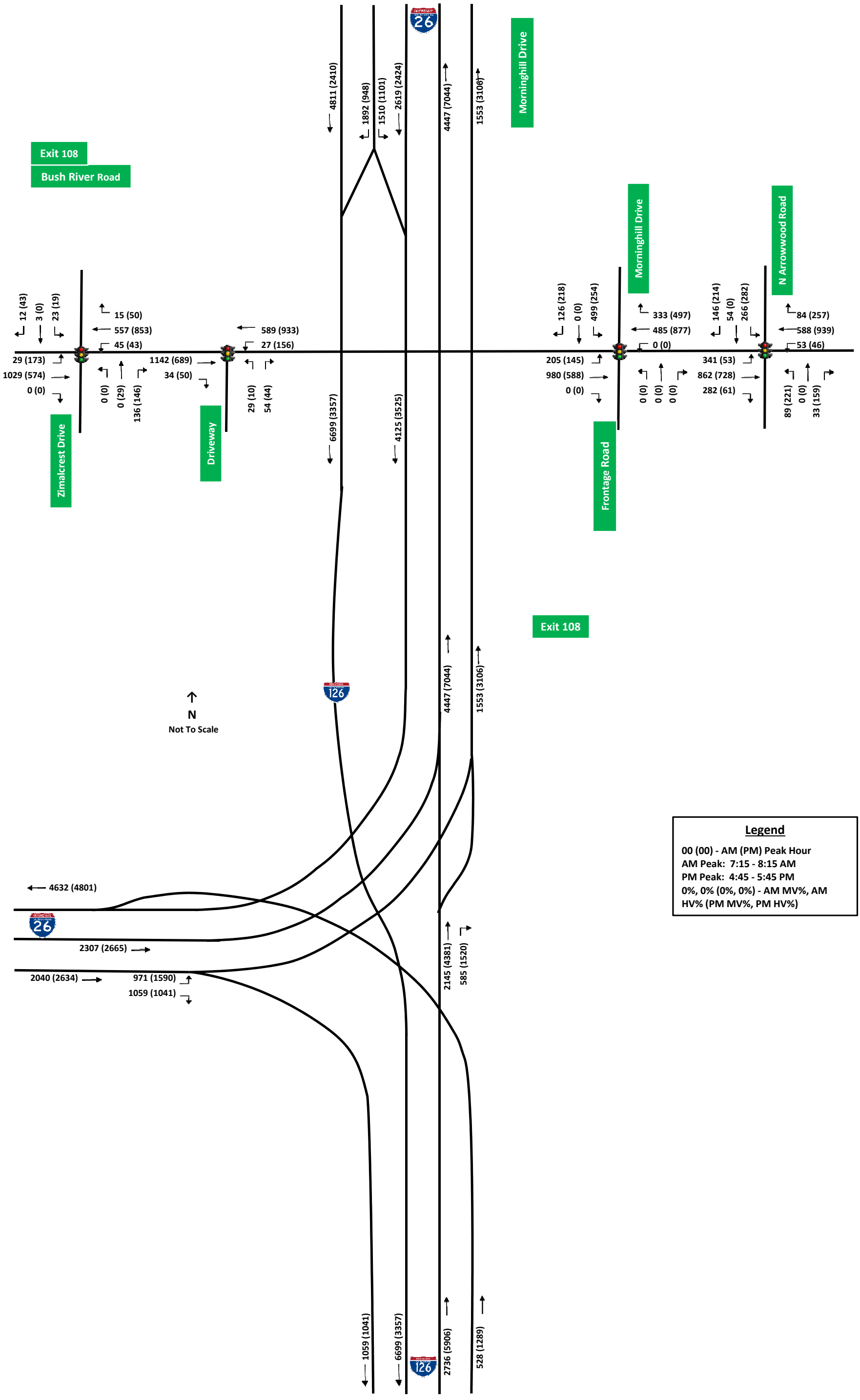

Legend

00 (00) - AM (PM) Peak Hour
AM Peak: 7:15 - 8:15 AM
PM Peak: 4:45 - 5:45 PM
0%, 0% (0%, 0%) - AM MV%, AM HV% (PM MV%, PM HV%)

Carolina Crossroads
2040 RRPA Interchange Volumes

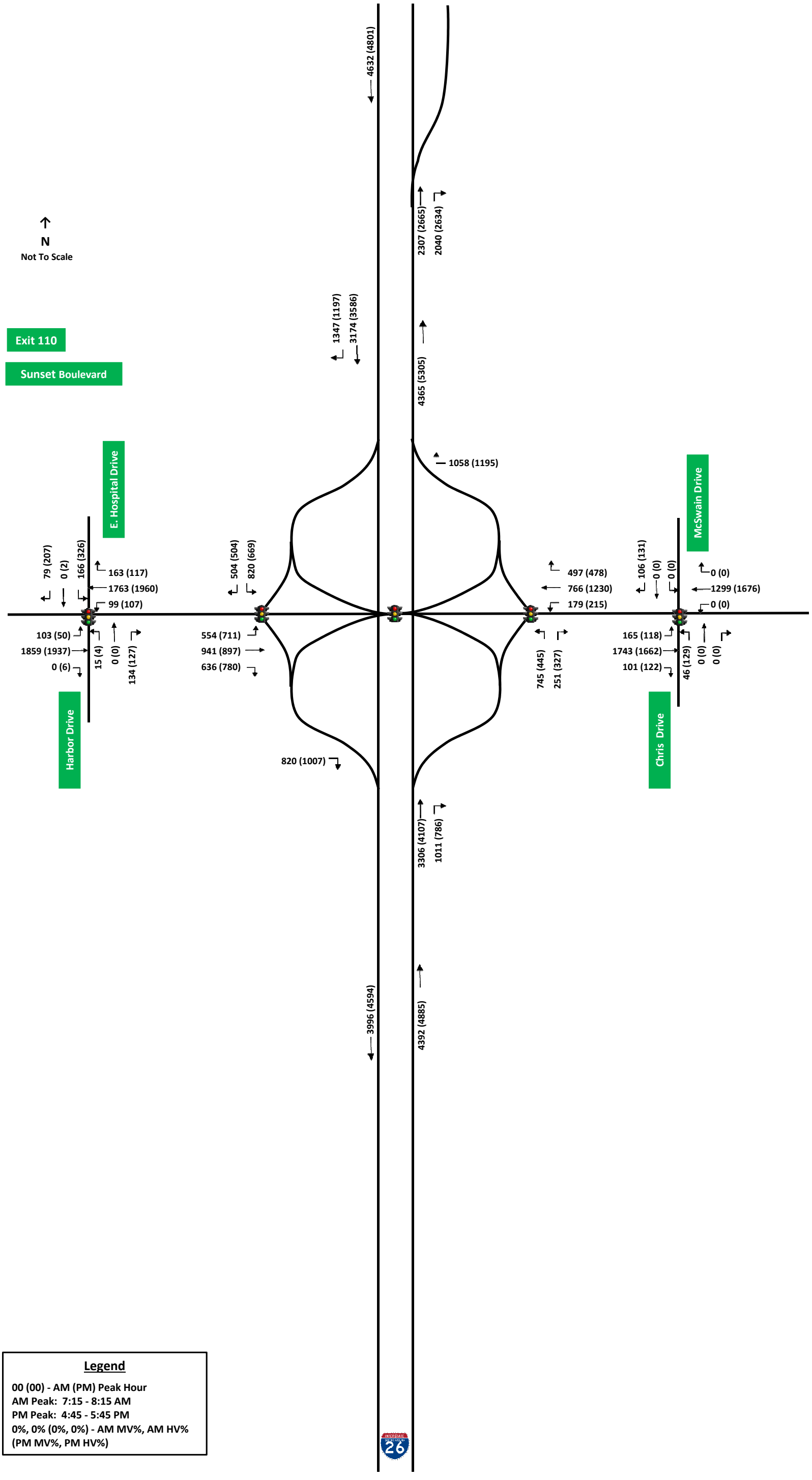

Legend

00 (00) - AM (PM) Peak Hour
AM Peak: 7:15 - 8:15 AM
PM Peak: 4:45 - 5:45 PM
0%, 0% (0%, 0%) - AM MV%, AM HV%
(PM MV%, PM HV%)

Carolina Crossroads
2040 RRPA Interchange Volumes

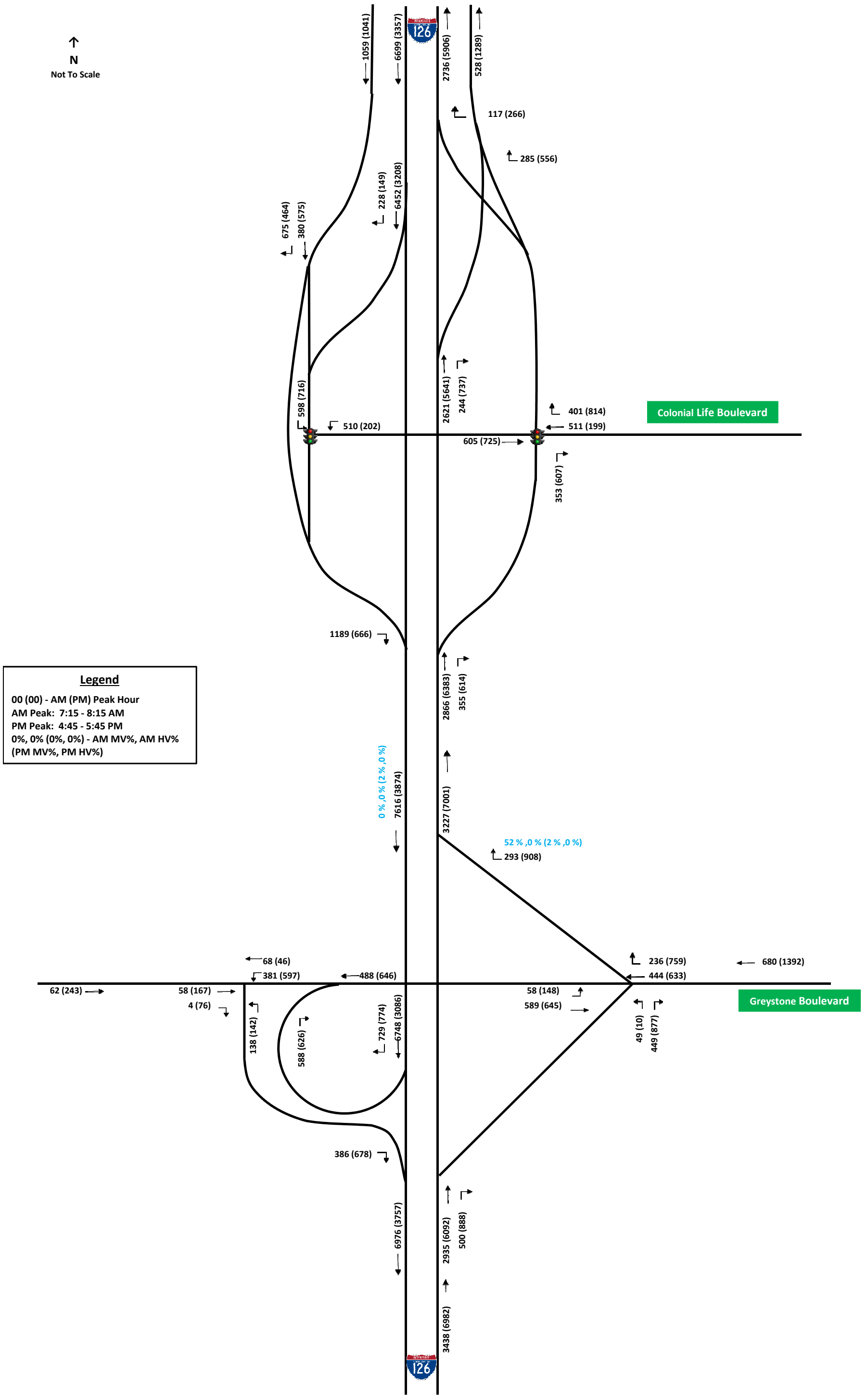

Carolina Crossroads
2040 RRPA Interchange Volumes

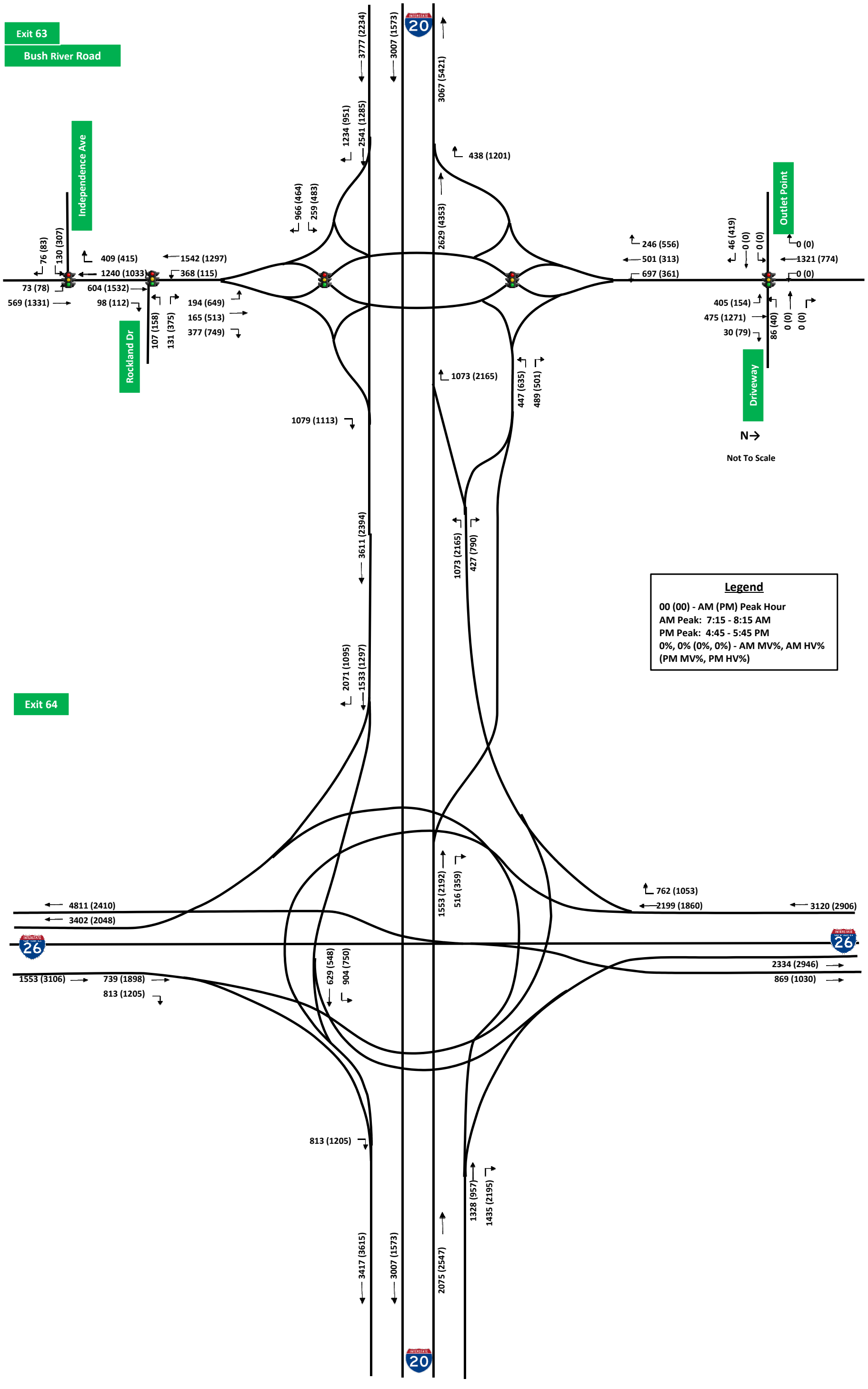

Carolina Crossroads
2040 RRPA Interchange Volumes

Exit 65

Broad River Road

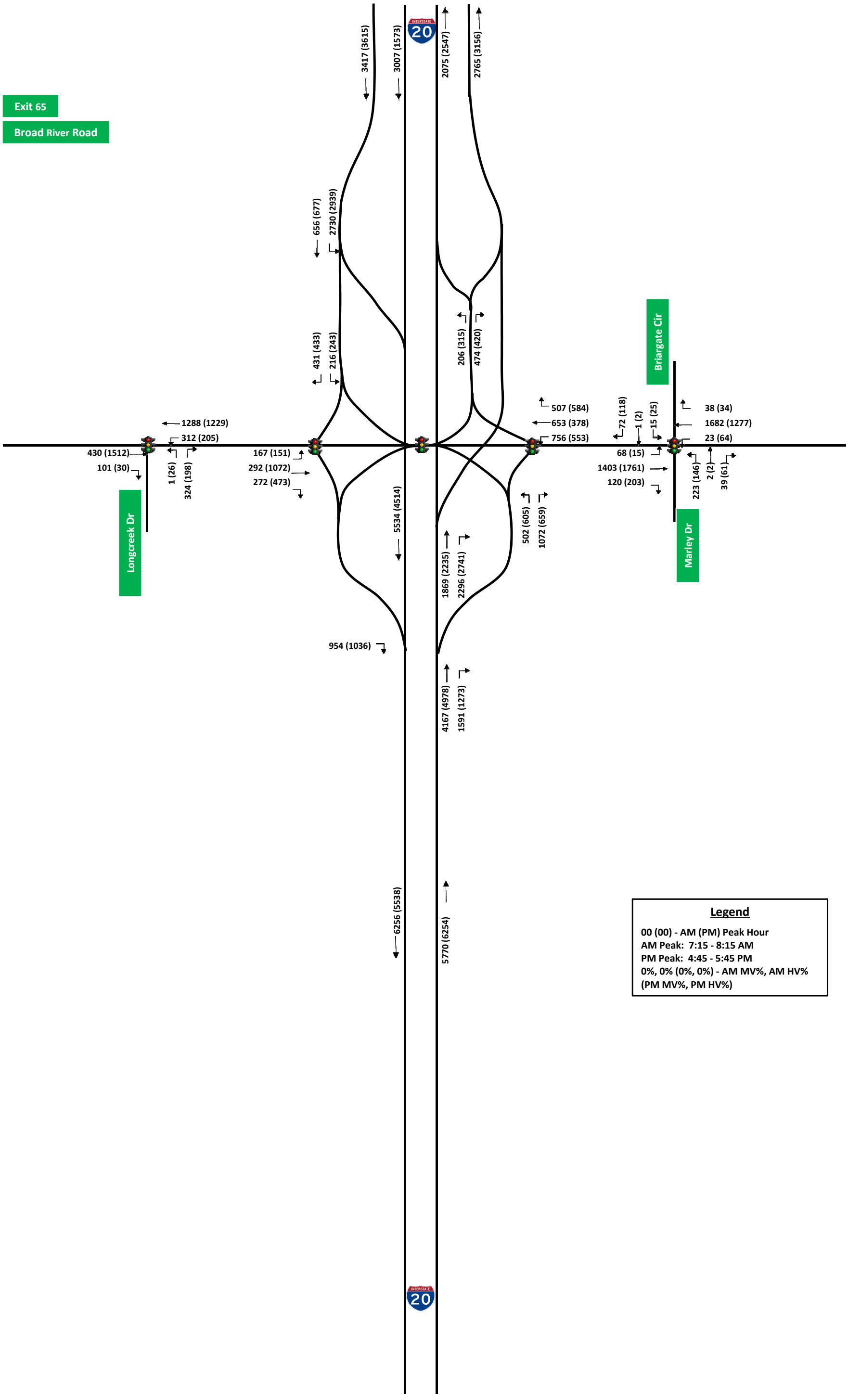

Legend

00 (00) - AM (PM) Peak Hour
AM Peak: 7:15 - 8:15 AM
PM Peak: 4:45 - 5:45 PM
0%, 0% (0%, 0%) - AM MV%, AM HV%
(PM MV%, PM HV%)

Appendix C— TransModeler Density Outputs

Existing AM

ID	Run	Density	Name (Type)	Direction
2466	1	32.864322	I-20 EB (Weaving Analysis)	E
2466	2	34.265022	I-20 EB (Weaving Analysis)	E
2466	3	31.880658	I-20 EB (Weaving Analysis)	E
2466	4	34.999369	I-20 EB (Weaving Analysis)	E
2466	5	35.080963	I-20 EB (Weaving Analysis)	E
2466	6	31.608678	I-20 EB (Weaving Analysis)	E
2466	7	33.603202	I-20 EB (Weaving Analysis)	E
2466	8	32.846189	I-20 EB (Weaving Analysis)	E
2466	9	33.557872	I-20 EB (Weaving Analysis)	E
2466	10	31.576947	I-20 EB (Weaving Analysis)	E
2467	1	19.6053	I-20 WB (Weaving Analysis)	W
2467	2	19.15774	I-20 WB (Weaving Analysis)	W
2467	3	19.894576	I-20 WB (Weaving Analysis)	W
2467	4	17.886015	I-20 WB (Weaving Analysis)	W
2467	5	22.028672	I-20 WB (Weaving Analysis)	W
2467	6	19.108618	I-20 WB (Weaving Analysis)	W
2467	7	18.699264	I-20 WB (Weaving Analysis)	W
2467	8	19.528887	I-20 WB (Weaving Analysis)	W
2467	9	20.707825	I-20 WB (Weaving Analysis)	W
2467	10	18.355407	I-20 WB (Weaving Analysis)	W
2806	1	43.533556	I-20 EB (Basic Analysis)	NE
2806	2	43.678865	I-20 EB (Basic Analysis)	NE
2806	3	43.307263	I-20 EB (Basic Analysis)	NE
2806	4	43.59055	I-20 EB (Basic Analysis)	NE
2806	5	43.666997	I-20 EB (Basic Analysis)	NE
2806	6	44.127079	I-20 EB (Basic Analysis)	NE
2806	7	43.881854	I-20 EB (Basic Analysis)	NE
2806	8	43.895512	I-20 EB (Basic Analysis)	NE
2806	9	43.292905	I-20 EB (Basic Analysis)	NE
2806	10	43.405572	I-20 EB (Basic Analysis)	NE
2807	1	43.533556	I-20 EB (Basic Analysis)	NE
2807	2	43.678865	I-20 EB (Basic Analysis)	NE
2807	3	43.307263	I-20 EB (Basic Analysis)	NE
2807	4	43.59055	I-20 EB (Basic Analysis)	NE
2807	5	43.666997	I-20 EB (Basic Analysis)	NE
2807	6	44.127079	I-20 EB (Basic Analysis)	NE
2807	7	43.881854	I-20 EB (Basic Analysis)	NE
2807	8	43.895512	I-20 EB (Basic Analysis)	NE
2807	9	43.292905	I-20 EB (Basic Analysis)	NE
2807	10	43.405572	I-20 EB (Basic Analysis)	NE
2808	1	35.977092	I-20 EB (Diverge Analysis)	NE
2808	2	37.407976	I-20 EB (Diverge Analysis)	NE
2808	3	36.211752	I-20 EB (Diverge Analysis)	NE
2808	4	36.114651	I-20 EB (Diverge Analysis)	NE
2808	5	36.423485	I-20 EB (Diverge Analysis)	NE
2808	6	38.130836	I-20 EB (Diverge Analysis)	NE
2808	7	37.131509	I-20 EB (Diverge Analysis)	NE
2808	8	37.039803	I-20 EB (Diverge Analysis)	NE
2808	9	35.456526	I-20 EB (Diverge Analysis)	NE
2808	10	36.869878	I-20 EB (Diverge Analysis)	NE
2813	1	12.106883	I-20 WB (Merge Analysis)	S
2813	2	11.252617	I-20 WB (Merge Analysis)	S
2813	3	11.504532	I-20 WB (Merge Analysis)	S
2813	4	13.004798	I-20 WB (Merge Analysis)	S
2813	5	12.589512	I-20 WB (Merge Analysis)	S
2813	6	12.22037	I-20 WB (Merge Analysis)	S
2813	7	11.840003	I-20 WB (Merge Analysis)	S
2813	8	13.57223	I-20 WB (Merge Analysis)	S
2813	9	13.11579	I-20 WB (Merge Analysis)	S
2813	10	12.328868	I-20 WB (Merge Analysis)	S
2814	1	15.367391	I-20 WB (Basic Analysis)	S
2814	2	15.657885	I-20 WB (Basic Analysis)	S
2814	3	15.07052	I-20 WB (Basic Analysis)	S
2814	4	15.575541	I-20 WB (Basic Analysis)	S

Existing AM

ID	Run	Density	Name (Type)	Direction
2814	5	16.153315	I-20 WB (Basic Analysis)	S
2814	6	15.595604	I-20 WB (Basic Analysis)	S
2814	7	15.212511	I-20 WB (Basic Analysis)	S
2814	8	15.53972	I-20 WB (Basic Analysis)	S
2814	9	15.48028	I-20 WB (Basic Analysis)	S
2814	10	15.540299	I-20 WB (Basic Analysis)	S
2815	1	15.367391	I-20 WB (Basic Analysis)	S
2815	2	15.657885	I-20 WB (Basic Analysis)	S
2815	3	15.07052	I-20 WB (Basic Analysis)	S
2815	4	15.575541	I-20 WB (Basic Analysis)	S
2815	5	16.153315	I-20 WB (Basic Analysis)	S
2815	6	15.595604	I-20 WB (Basic Analysis)	S
2815	7	15.212511	I-20 WB (Basic Analysis)	S
2815	8	15.53972	I-20 WB (Basic Analysis)	S
2815	9	15.48028	I-20 WB (Basic Analysis)	S
2815	10	15.540299	I-20 WB (Basic Analysis)	S
2822	1	7.25058	I-20 WB (Merge Analysis)	SW
2822	2	7.44819	I-20 WB (Merge Analysis)	SW
2822	3	6.909032	I-20 WB (Merge Analysis)	SW
2822	4	10.095188	I-20 WB (Merge Analysis)	SW
2822	5	6.450381	I-20 WB (Merge Analysis)	SW
2822	6	7.348165	I-20 WB (Merge Analysis)	SW
2822	7	8.738754	I-20 WB (Merge Analysis)	SW
2822	8	8.075175	I-20 WB (Merge Analysis)	SW
2822	9	8.409404	I-20 WB (Merge Analysis)	SW
2822	10	7.340846	I-20 WB (Merge Analysis)	SW
2823	1	474.487431	I-20 WB (Basic Analysis)	SW
2823	2	139.555127	I-20 WB (Basic Analysis)	SW
2823	3	358.191492	I-20 WB (Basic Analysis)	SW
2823	4	297.717603	I-20 WB (Basic Analysis)	SW
2823	5	302.369442	I-20 WB (Basic Analysis)	SW
2823	6	139.555127	I-20 WB (Basic Analysis)	SW
2823	7	576.827856	I-20 WB (Basic Analysis)	SW
2823	8	395.406193	I-20 WB (Basic Analysis)	SW
2823	9	441.924569	I-20 WB (Basic Analysis)	SW
2823	10	325.62863	I-20 WB (Basic Analysis)	SW
2826	1	21.899824	I-20 EB (Basic Analysis)	NE
2826	2	20.825607	I-20 EB (Basic Analysis)	NE
2826	3	21.910758	I-20 EB (Basic Analysis)	NE
2826	4	21.511685	I-20 EB (Basic Analysis)	NE
2826	5	23.733921	I-20 EB (Basic Analysis)	NE
2826	6	21.027877	I-20 EB (Basic Analysis)	NE
2826	7	22.233296	I-20 EB (Basic Analysis)	NE
2826	8	21.897091	I-20 EB (Basic Analysis)	NE
2826	9	19.901725	I-20 EB (Basic Analysis)	NE
2826	10	21.243814	I-20 EB (Basic Analysis)	NE
2829	1	24.283208	I-20 EB (Merge Analysis)	NE
2829	2	25.865062	I-20 EB (Merge Analysis)	NE
2829	3	26.013826	I-20 EB (Merge Analysis)	NE
2829	4	23.938572	I-20 EB (Merge Analysis)	NE
2829	5	26.232013	I-20 EB (Merge Analysis)	NE
2829	6	25.825392	I-20 EB (Merge Analysis)	NE
2829	7	25.150996	I-20 EB (Merge Analysis)	NE
2829	8	24.317919	I-20 EB (Merge Analysis)	NE
2829	9	25.5477	I-20 EB (Merge Analysis)	NE
2829	10	24.68487	I-20 EB (Merge Analysis)	NE
2830	1	29.810077	I-20 EB (Basic Analysis)	NE
2830	2	32.752816	I-20 EB (Basic Analysis)	NE
2830	3	31.433202	I-20 EB (Basic Analysis)	NE
2830	4	31.98744	I-20 EB (Basic Analysis)	NE
2830	5	31.604752	I-20 EB (Basic Analysis)	NE
2830	6	32.97715	I-20 EB (Basic Analysis)	NE
2830	7	30.971337	I-20 EB (Basic Analysis)	NE
2830	8	29.335016	I-20 EB (Basic Analysis)	NE

Existing AM

ID	Run	Density	Name (Type)	Direction
2830	9	33.029935	I-20 EB (Basic Analysis)	NE
2830	10	31.142887	I-20 EB (Basic Analysis)	NE
2831	1	10.209618	I-20 WB (Basic Analysis)	SW
2831	2	8.355973	I-20 WB (Basic Analysis)	SW
2831	3	9.519264	I-20 WB (Basic Analysis)	SW
2831	4	9.821854	I-20 WB (Basic Analysis)	SW
2831	5	9.440815	I-20 WB (Basic Analysis)	SW
2831	6	8.936498	I-20 WB (Basic Analysis)	SW
2831	7	9.156156	I-20 WB (Basic Analysis)	SW
2831	8	9.826337	I-20 WB (Basic Analysis)	SW
2831	9	9.965305	I-20 WB (Basic Analysis)	SW
2831	10	9.55961	I-20 WB (Basic Analysis)	SW
2837	1	12.732043	I-20 WB (Merge Analysis)	SW
2837	2	11.780769	I-20 WB (Merge Analysis)	SW
2837	3	11.743219	I-20 WB (Merge Analysis)	SW
2837	4	12.451667	I-20 WB (Merge Analysis)	SW
2837	5	11.966017	I-20 WB (Merge Analysis)	SW
2837	6	11.8033	I-20 WB (Merge Analysis)	SW
2837	7	13.377907	I-20 WB (Merge Analysis)	SW
2837	8	13.337854	I-20 WB (Merge Analysis)	SW
2837	9	12.699499	I-20 WB (Merge Analysis)	SW
2837	10	11.067314	I-20 WB (Merge Analysis)	SW
2838	1	18.460258	I-20 WB (Basic Analysis)	SW
2838	2	16.948981	I-20 WB (Basic Analysis)	SW
2838	3	16.951005	I-20 WB (Basic Analysis)	SW
2838	4	18.354985	I-20 WB (Basic Analysis)	SW
2838	5	16.814353	I-20 WB (Basic Analysis)	SW
2838	6	17.003642	I-20 WB (Basic Analysis)	SW
2838	7	17.477371	I-20 WB (Basic Analysis)	SW
2838	8	18.422805	I-20 WB (Basic Analysis)	SW
2838	9	18.613107	I-20 WB (Basic Analysis)	SW
2838	10	17.70715	I-20 WB (Basic Analysis)	SW
2839	1	19.738436	I-20 WB (Diverge Analysis)	SW
2839	2	19.536715	I-20 WB (Diverge Analysis)	SW
2839	3	18.825647	I-20 WB (Diverge Analysis)	SW
2839	4	18.934072	I-20 WB (Diverge Analysis)	SW
2839	5	20.678962	I-20 WB (Diverge Analysis)	SW
2839	6	19.972938	I-20 WB (Diverge Analysis)	SW
2839	7	19.269434	I-20 WB (Diverge Analysis)	SW
2839	8	19.211439	I-20 WB (Diverge Analysis)	SW
2839	9	21.750607	I-20 WB (Diverge Analysis)	SW
2839	10	19.198832	I-20 WB (Diverge Analysis)	SW
2840	1	19.738436	I-20 WB (Diverge Analysis)	SW
2840	2	19.536715	I-20 WB (Diverge Analysis)	SW
2840	3	18.825647	I-20 WB (Diverge Analysis)	SW
2840	4	18.934072	I-20 WB (Diverge Analysis)	SW
2840	5	20.678962	I-20 WB (Diverge Analysis)	SW
2840	6	19.972938	I-20 WB (Diverge Analysis)	SW
2840	7	19.269434	I-20 WB (Diverge Analysis)	SW
2840	8	19.211439	I-20 WB (Diverge Analysis)	SW
2840	9	21.750607	I-20 WB (Diverge Analysis)	SW
2840	10	19.198832	I-20 WB (Diverge Analysis)	SW
2843	1	29.17255	I-20 EB (Merge Analysis)	NE
2843	2	29.315891	I-20 EB (Merge Analysis)	NE
2843	3	27.962115	I-20 EB (Merge Analysis)	NE
2843	4	31.230644	I-20 EB (Merge Analysis)	NE
2843	5	30.31043	I-20 EB (Merge Analysis)	NE
2843	6	29.800774	I-20 EB (Merge Analysis)	NE
2843	7	28.537249	I-20 EB (Merge Analysis)	NE
2843	8	28.002817	I-20 EB (Merge Analysis)	NE
2843	9	28.301886	I-20 EB (Merge Analysis)	NE
2843	10	27.418835	I-20 EB (Merge Analysis)	NE
2844	1	29.17255	I-20 EB (Merge Analysis)	NE
2844	2	29.315891	I-20 EB (Merge Analysis)	NE

Existing AM

ID	Run	Density	Name (Type)	Direction
2844	3	27.962115	I-20 EB (Merge Analysis)	NE
2844	4	31.230644	I-20 EB (Merge Analysis)	NE
2844	5	30.31043	I-20 EB (Merge Analysis)	NE
2844	6	29.800774	I-20 EB (Merge Analysis)	NE
2844	7	28.537249	I-20 EB (Merge Analysis)	NE
2844	8	28.002817	I-20 EB (Merge Analysis)	NE
2844	9	28.301886	I-20 EB (Merge Analysis)	NE
2844	10	27.418835	I-20 EB (Merge Analysis)	NE
2848	1	27.373298	I-20 EB (Basic Analysis)	NE
2848	2	28.291444	I-20 EB (Basic Analysis)	NE
2848	3	27.847529	I-20 EB (Basic Analysis)	NE
2848	4	28.516649	I-20 EB (Basic Analysis)	NE
2848	5	30.708072	I-20 EB (Basic Analysis)	NE
2848	6	28.741855	I-20 EB (Basic Analysis)	NE
2848	7	27.637481	I-20 EB (Basic Analysis)	NE
2848	8	28.202661	I-20 EB (Basic Analysis)	NE
2848	9	27.682956	I-20 EB (Basic Analysis)	NE
2848	10	28.737524	I-20 EB (Basic Analysis)	NE
2852	1	12.932373	I-20 WB (Basic Analysis)	SW
2852	2	13.009227	I-20 WB (Basic Analysis)	SW
2852	3	12.623561	I-20 WB (Basic Analysis)	SW
2852	4	13.596109	I-20 WB (Basic Analysis)	SW
2852	5	13.081888	I-20 WB (Basic Analysis)	SW
2852	6	12.788447	I-20 WB (Basic Analysis)	SW
2852	7	12.170823	I-20 WB (Basic Analysis)	SW
2852	8	12.862506	I-20 WB (Basic Analysis)	SW
2852	9	12.549502	I-20 WB (Basic Analysis)	SW
2852	10	13.551394	I-20 WB (Basic Analysis)	SW
2856	1	21.534431	I-20 EB (Basic Analysis)	NE
2856	2	21.586433	I-20 EB (Basic Analysis)	NE
2856	3	21.580655	I-20 EB (Basic Analysis)	NE
2856	4	21.555617	I-20 EB (Basic Analysis)	NE
2856	5	22.437717	I-20 EB (Basic Analysis)	NE
2856	6	22.094892	I-20 EB (Basic Analysis)	NE
2856	7	21.545987	I-20 EB (Basic Analysis)	NE
2856	8	21.307165	I-20 EB (Basic Analysis)	NE
2856	9	21.651916	I-20 EB (Basic Analysis)	NE
2856	10	21.183902	I-20 EB (Basic Analysis)	NE
2859	1	13.344386	I-20 WB (Weaving Analysis)	SW
2859	2	13.35285	I-20 WB (Weaving Analysis)	SW
2859	3	13.879769	I-20 WB (Weaving Analysis)	SW
2859	4	12.356148	I-20 WB (Weaving Analysis)	SW
2859	5	27.556389	I-20 WB (Weaving Analysis)	SW
2859	6	13.600439	I-20 WB (Weaving Analysis)	SW
2859	7	13.274553	I-20 WB (Weaving Analysis)	SW
2859	8	12.474652	I-20 WB (Weaving Analysis)	SW
2859	9	13.001571	I-20 WB (Weaving Analysis)	SW
2859	10	22.257572	I-20 WB (Weaving Analysis)	SW
2863	1	19.541484	I-20 EB (Merge Analysis)	E
2863	2	17.891811	I-20 EB (Merge Analysis)	E
2863	3	18.956954	I-20 EB (Merge Analysis)	E
2863	4	18.717946	I-20 EB (Merge Analysis)	E
2863	5	19.133612	I-20 EB (Merge Analysis)	E
2863	6	18.917985	I-20 EB (Merge Analysis)	E
2863	7	19.094643	I-20 EB (Merge Analysis)	E
2863	8	19.105035	I-20 EB (Merge Analysis)	E
2863	9	19.647998	I-20 EB (Merge Analysis)	E
2863	10	18.842646	I-20 EB (Merge Analysis)	E
4563	1	18.796794	I-126 SB (Merge Analysis)	E
4563	2	18.717594	I-126 SB (Merge Analysis)	E
4563	3	18.283461	I-126 SB (Merge Analysis)	E
4563	4	19.395194	I-126 SB (Merge Analysis)	E
4563	5	19.359994	I-126 SB (Merge Analysis)	E
4563	6	15.628795	I-126 SB (Merge Analysis)	E

Existing AM

ID	Run	Density	Name (Type)	Direction
4563	7	20.049327	I-126 SB (Merge Analysis)	E
4563	8	18.664794	I-126 SB (Merge Analysis)	E
4563	9	18.298128	I-126 SB (Merge Analysis)	E
4563	10	20.706394	I-126 SB (Merge Analysis)	E
4566	1	14.441357	I-126 NB (Basic Analysis)	W
4566	2	14.413461	I-126 NB (Basic Analysis)	W
4566	3	13.755807	I-126 NB (Basic Analysis)	W
4566	4	13.57829	I-126 NB (Basic Analysis)	W
4566	5	14.133662	I-126 NB (Basic Analysis)	W
4566	6	14.233409	I-126 NB (Basic Analysis)	W
4566	7	13.557158	I-126 NB (Basic Analysis)	W
4566	8	12.984879	I-126 NB (Basic Analysis)	W
4566	9	13.716077	I-126 NB (Basic Analysis)	W
4566	10	12.992487	I-126 NB (Basic Analysis)	W
4570	1	11.556613	I-126 NB (Basic Analysis)	NW
4570	2	10.828516	I-126 NB (Basic Analysis)	NW
4570	3	11.930791	I-126 NB (Basic Analysis)	NW
4570	4	10.774892	I-126 NB (Basic Analysis)	NW
4570	5	11.653137	I-126 NB (Basic Analysis)	NW
4570	6	11.617388	I-126 NB (Basic Analysis)	NW
4570	7	11.957008	I-126 NB (Basic Analysis)	NW
4570	8	10.220775	I-126 NB (Basic Analysis)	NW
4570	9	10.964364	I-126 NB (Basic Analysis)	NW
4570	10	11.752044	I-126 NB (Basic Analysis)	NW
4573	1	25.553797	I-126 SB (Basic Analysis)	E
4573	2	24.932834	I-126 SB (Basic Analysis)	E
4573	3	22.724093	I-126 SB (Basic Analysis)	E
4573	4	22.773875	I-126 SB (Basic Analysis)	E
4573	5	25.388731	I-126 SB (Basic Analysis)	E
4573	6	25.417552	I-126 SB (Basic Analysis)	E
4573	7	24.676065	I-126 SB (Basic Analysis)	E
4573	8	25.07956	I-126 SB (Basic Analysis)	E
4573	9	24.482178	I-126 SB (Basic Analysis)	E
4573	10	26.45773	I-126 SB (Basic Analysis)	E
4578	1	24.825253	I-126 SB (Basic Analysis)	E
4578	2	25.442166	I-126 SB (Basic Analysis)	E
4578	3	24.588629	I-126 SB (Basic Analysis)	E
4578	4	25.596816	I-126 SB (Basic Analysis)	E
4578	5	25.748087	I-126 SB (Basic Analysis)	E
4578	6	23.567764	I-126 SB (Basic Analysis)	E
4578	7	24.908071	I-126 SB (Basic Analysis)	E
4578	8	25.071173	I-126 SB (Basic Analysis)	E
4578	9	24.586938	I-126 SB (Basic Analysis)	E
4578	10	25.131174	I-126 SB (Basic Analysis)	E
4579	1	15.935704	I-126 SB (Diverge Analysis)	E
4579	2	16.262577	I-126 SB (Diverge Analysis)	E
4579	3	15.266268	I-126 SB (Diverge Analysis)	E
4579	4	15.577451	I-126 SB (Diverge Analysis)	E
4579	5	14.98908	I-126 SB (Diverge Analysis)	E
4579	6	16.762038	I-126 SB (Diverge Analysis)	E
4579	7	15.177359	I-126 SB (Diverge Analysis)	E
4579	8	16.239042	I-126 SB (Diverge Analysis)	E
4579	9	14.445164	I-126 SB (Diverge Analysis)	E
4579	10	15.394402	I-126 SB (Diverge Analysis)	E
4586	1	12.384687	I-126 NB (Merge Analysis)	NW
4586	2	12.657024	I-126 NB (Merge Analysis)	NW
4586	3	13.241443	I-126 NB (Merge Analysis)	NW
4586	4	12.926416	I-126 NB (Merge Analysis)	NW
4586	5	13.048599	I-126 NB (Merge Analysis)	NW
4586	6	12.639359	I-126 NB (Merge Analysis)	NW
4586	7	12.780679	I-126 NB (Merge Analysis)	NW
4586	8	12.517175	I-126 NB (Merge Analysis)	NW
4586	9	12.261032	I-126 NB (Merge Analysis)	NW
4586	10	13.12662	I-126 NB (Merge Analysis)	NW

Existing AM

ID	Run	Density	Name (Type)	Direction
4587	1	14.741533	I-126 NB (Basic Analysis)	NW
4587	2	14.791134	I-126 NB (Basic Analysis)	NW
4587	3	12.053137	I-126 NB (Basic Analysis)	NW
4587	4	15.55698	I-126 NB (Basic Analysis)	NW
4587	5	15.239531	I-126 NB (Basic Analysis)	NW
4587	6	14.239567	I-126 NB (Basic Analysis)	NW
4587	7	13.949894	I-126 NB (Basic Analysis)	NW
4587	8	13.541179	I-126 NB (Basic Analysis)	NW
4587	9	14.703836	I-126 NB (Basic Analysis)	NW
4587	10	14.99946	I-126 NB (Basic Analysis)	NW
4588	1	11.72512	I-126 NB (Diverge Analysis)	NW
4588	2	12.229884	I-126 NB (Diverge Analysis)	NW
4588	3	12.067589	I-126 NB (Diverge Analysis)	NW
4588	4	12.610217	I-126 NB (Diverge Analysis)	NW
4588	5	12.512403	I-126 NB (Diverge Analysis)	NW
4588	6	11.937864	I-126 NB (Diverge Analysis)	NW
4588	7	11.829649	I-126 NB (Diverge Analysis)	NW
4588	8	11.796201	I-126 NB (Diverge Analysis)	NW
4588	9	12.189738	I-126 NB (Diverge Analysis)	NW
4588	10	13.475979	I-126 NB (Diverge Analysis)	NW
4589	1	11.72512	I-126 NB (Diverge Analysis)	NW
4589	2	12.229884	I-126 NB (Diverge Analysis)	NW
4589	3	12.067589	I-126 NB (Diverge Analysis)	NW
4589	4	12.610217	I-126 NB (Diverge Analysis)	NW
4589	5	12.512403	I-126 NB (Diverge Analysis)	NW
4589	6	11.937864	I-126 NB (Diverge Analysis)	NW
4589	7	11.829649	I-126 NB (Diverge Analysis)	NW
4589	8	11.796201	I-126 NB (Diverge Analysis)	NW
4589	9	12.189738	I-126 NB (Diverge Analysis)	NW
4589	10	13.475979	I-126 NB (Diverge Analysis)	NW
4593	1	25.895332	I-126 SB (Merge Analysis)	SE
4593	2	26.157477	I-126 SB (Merge Analysis)	SE
4593	3	24.942782	I-126 SB (Merge Analysis)	SE
4593	4	25.020647	I-126 SB (Merge Analysis)	SE
4593	5	25.713646	I-126 SB (Merge Analysis)	SE
4593	6	24.23421	I-126 SB (Merge Analysis)	SE
4593	7	24.296502	I-126 SB (Merge Analysis)	SE
4593	8	25.11149	I-126 SB (Merge Analysis)	SE
4593	9	23.595716	I-126 SB (Merge Analysis)	SE
4593	10	25.031029	I-126 SB (Merge Analysis)	SE
4594	1	29.361073	I-126 SB (Basic Analysis)	SE
4594	2	29.69741	I-126 SB (Basic Analysis)	SE
4594	3	28.799989	I-126 SB (Basic Analysis)	SE
4594	4	29.11275	I-126 SB (Basic Analysis)	SE
4594	5	30.343364	I-126 SB (Basic Analysis)	SE
4594	6	29.035739	I-126 SB (Basic Analysis)	SE
4594	7	29.475805	I-126 SB (Basic Analysis)	SE
4594	8	29.786209	I-126 SB (Basic Analysis)	SE
4594	9	28.285268	I-126 SB (Basic Analysis)	SE
4594	10	30.043962	I-126 SB (Basic Analysis)	SE
4599	1	13.374223	I-126 NB (Basic Analysis)	NW
4599	2	11.913039	I-126 NB (Basic Analysis)	NW
4599	3	12.698953	I-126 NB (Basic Analysis)	NW
4599	4	11.266286	I-126 NB (Basic Analysis)	NW
4599	5	12.777659	I-126 NB (Basic Analysis)	NW
4599	6	10.838539	I-126 NB (Basic Analysis)	NW
4599	7	12.562074	I-126 NB (Basic Analysis)	NW
4599	8	11.295943	I-126 NB (Basic Analysis)	NW
4599	9	11.902774	I-126 NB (Basic Analysis)	NW
4599	10	12.17311	I-126 NB (Basic Analysis)	NW
4601	1	13.315677	I-126 NB (Basic Analysis)	NW
4601	2	13.46239	I-126 NB (Basic Analysis)	NW
4601	3	12.416325	I-126 NB (Basic Analysis)	NW
4601	4	13.072133	I-126 NB (Basic Analysis)	NW

Existing AM

ID	Run	Density	Name (Type)	Direction
4601	5	12.869669	I-126 NB (Basic Analysis)	NW
4601	6	13.757283	I-126 NB (Basic Analysis)	NW
4601	7	12.62906	I-126 NB (Basic Analysis)	NW
4601	8	12.530762	I-126 NB (Basic Analysis)	NW
4601	9	13.240853	I-126 NB (Basic Analysis)	NW
4601	10	12.454471	I-126 NB (Basic Analysis)	NW
4602	1	7.54246	; WB EXPRESSWAY TO I-26 WB (Basic Anal	NW
4602	2	5.830605	; WB EXPRESSWAY TO I-26 WB (Basic Anal	NW
4602	3	8.520664	; WB EXPRESSWAY TO I-26 WB (Basic Anal	NW
4602	4	6.487031	; WB EXPRESSWAY TO I-26 WB (Basic Anal	NW
4602	5	7.130586	; WB EXPRESSWAY TO I-26 WB (Basic Anal	NW
4602	6	7.285039	; WB EXPRESSWAY TO I-26 WB (Basic Anal	NW
4602	7	7.362265	; WB EXPRESSWAY TO I-26 WB (Basic Anal	NW
4602	8	6.989003	; WB EXPRESSWAY TO I-26 WB (Basic Anal	NW
4602	9	5.457343	; WB EXPRESSWAY TO I-26 WB (Basic Anal	NW
4602	10	7.671171	; WB EXPRESSWAY TO I-26 WB (Basic Anal	NW
4603	1	19.511169	I-126 NB (Basic Analysis)	NW
4603	2	18.842777	I-126 NB (Basic Analysis)	NW
4603	3	18.960112	I-126 NB (Basic Analysis)	NW
4603	4	19.861079	I-126 NB (Basic Analysis)	NW
4603	5	19.603361	I-126 NB (Basic Analysis)	NW
4603	6	18.876301	I-126 NB (Basic Analysis)	NW
4603	7	17.946001	I-126 NB (Basic Analysis)	NW
4603	8	18.28753	I-126 NB (Basic Analysis)	NW
4603	9	18.754776	I-126 NB (Basic Analysis)	NW
4603	10	20.37023	I-126 NB (Basic Analysis)	NW
4609	1	30.609742	I-126 SB (Basic Analysis)	SE
4609	2	30.489389	I-126 SB (Basic Analysis)	SE
4609	3	29.167868	I-126 SB (Basic Analysis)	SE
4609	4	30.13305	I-126 SB (Basic Analysis)	SE
4609	5	31.782592	I-126 SB (Basic Analysis)	SE
4609	6	29.63512	I-126 SB (Basic Analysis)	SE
4609	7	31.166669	I-126 SB (Basic Analysis)	SE
4609	8	30.772572	I-126 SB (Basic Analysis)	SE
4609	9	29.363736	I-126 SB (Basic Analysis)	SE
4609	10	30.98024	I-126 SB (Basic Analysis)	SE
4611	1	52.908518	I-26 EB (Diverge Analysis)	SE
4611	2	52.779451	I-26 EB (Diverge Analysis)	SE
4611	3	52.521318	I-26 EB (Diverge Analysis)	SE
4611	4	49.725852	I-26 EB (Diverge Analysis)	SE
4611	5	53.729851	I-26 EB (Diverge Analysis)	SE
4611	6	51.529851	I-26 EB (Diverge Analysis)	SE
4611	7	53.301584	I-26 EB (Diverge Analysis)	SE
4611	8	49.379719	I-26 EB (Diverge Analysis)	SE
4611	9	50.042651	I-26 EB (Diverge Analysis)	SE
4611	10	53.79145	I-26 EB (Diverge Analysis)	SE
4619	1	32.576595	I-26 WB (Basic Analysis)	NW
4619	2	28.540557	I-26 WB (Basic Analysis)	NW
4619	3	31.201681	I-26 WB (Basic Analysis)	NW
4619	4	27.010411	I-26 WB (Basic Analysis)	NW
4619	5	29.383246	I-26 WB (Basic Analysis)	NW
4619	6	28.717965	I-26 WB (Basic Analysis)	NW
4619	7	28.673613	I-26 WB (Basic Analysis)	NW
4619	8	36.546106	I-26 WB (Basic Analysis)	NW
4619	9	30.824689	I-26 WB (Basic Analysis)	NW
4619	10	28.407501	I-26 WB (Basic Analysis)	NW
4624	1	78.588809	I-26 EB (Weaving Analysis)	SE
4624	2	75.373242	I-26 EB (Weaving Analysis)	SE
4624	3	75.358652	I-26 EB (Weaving Analysis)	SE
4624	4	67.465632	I-26 EB (Weaving Analysis)	SE
4624	5	83.134956	I-26 EB (Weaving Analysis)	SE
4624	6	70.374815	I-26 EB (Weaving Analysis)	SE
4624	7	77.188199	I-26 EB (Weaving Analysis)	SE
4624	8	63.581857	I-26 EB (Weaving Analysis)	SE

Existing AM

ID	Run	Density	Name (Type)	Direction
4624	9	69.271836	I-26 EB (Weaving Analysis)	SE
4624	10	83.105776	I-26 EB (Weaving Analysis)	SE
4639	1	47.314223	I-26 EB (Basic Analysis)	SE
4639	2	46.767583	I-26 EB (Basic Analysis)	SE
4639	3	47.376341	I-26 EB (Basic Analysis)	SE
4639	4	43.947415	I-26 EB (Basic Analysis)	SE
4639	5	56.167316	I-26 EB (Basic Analysis)	SE
4639	6	47.177563	I-26 EB (Basic Analysis)	SE
4639	7	55.936236	I-26 EB (Basic Analysis)	SE
4639	8	40.170625	I-26 EB (Basic Analysis)	SE
4639	9	41.368265	I-26 EB (Basic Analysis)	SE
4639	10	63.904763	I-26 EB (Basic Analysis)	SE
4641	1	72.690325	I-26 EB (Basic Analysis)	SE
4641	2	70.286471	I-26 EB (Basic Analysis)	SE
4641	3	75.153631	I-26 EB (Basic Analysis)	SE
4641	4	72.416845	I-26 EB (Basic Analysis)	SE
4641	5	71.134657	I-26 EB (Basic Analysis)	SE
4641	6	74.767191	I-26 EB (Basic Analysis)	SE
4641	7	75.347842	I-26 EB (Basic Analysis)	SE
4641	8	71.802504	I-26 EB (Basic Analysis)	SE
4641	9	76.342677	I-26 EB (Basic Analysis)	SE
4641	10	74.263829	I-26 EB (Basic Analysis)	SE
4643	1	24.985681	I-26 WB (Weaving Analysis)	NW
4643	2	25.15294	I-26 WB (Weaving Analysis)	NW
4643	3	25.37358	I-26 WB (Weaving Analysis)	NW
4643	4	28.864671	I-26 WB (Weaving Analysis)	NW
4643	5	26.498131	I-26 WB (Weaving Analysis)	NW
4643	6	25.259701	I-26 WB (Weaving Analysis)	NW
4643	7	26.124467	I-26 WB (Weaving Analysis)	NW
4643	8	25.4839	I-26 WB (Weaving Analysis)	NW
4643	9	26.1992	I-26 WB (Weaving Analysis)	NW
4643	10	25.348669	I-26 WB (Weaving Analysis)	NW
4646	1	26.065835	I-26 WB (Basic Analysis)	NW
4646	2	24.936841	I-26 WB (Basic Analysis)	NW
4646	3	25.247202	I-26 WB (Basic Analysis)	NW
4646	4	26.549369	I-26 WB (Basic Analysis)	NW
4646	5	26.5921	I-26 WB (Basic Analysis)	NW
4646	6	24.950334	I-26 WB (Basic Analysis)	NW
4646	7	24.185677	I-26 WB (Basic Analysis)	NW
4646	8	25.436117	I-26 WB (Basic Analysis)	NW
4646	9	25.047041	I-26 WB (Basic Analysis)	NW
4646	10	25.726237	I-26 WB (Basic Analysis)	NW
4649	1	81.960807	I-26 EB (Basic Analysis)	SE
4649	2	74.242684	I-26 EB (Basic Analysis)	SE
4649	3	81.461944	I-26 EB (Basic Analysis)	SE
4649	4	77.140841	I-26 EB (Basic Analysis)	SE
4649	5	76.508947	I-26 EB (Basic Analysis)	SE
4649	6	81.865785	I-26 EB (Basic Analysis)	SE
4649	7	83.212715	I-26 EB (Basic Analysis)	SE
4649	8	79.226563	I-26 EB (Basic Analysis)	SE
4649	9	86.30329	I-26 EB (Basic Analysis)	SE
4649	10	71.612964	I-26 EB (Basic Analysis)	SE
4650	1	86.71441	I-26 EB (Weaving Analysis)	SE
4650	2	81.26579	I-26 EB (Weaving Analysis)	SE
4650	3	90.715213	I-26 EB (Weaving Analysis)	SE
4650	4	83.842453	I-26 EB (Weaving Analysis)	SE
4650	5	80.877048	I-26 EB (Weaving Analysis)	SE
4650	6	89.872939	I-26 EB (Weaving Analysis)	SE
4650	7	88.440076	I-26 EB (Weaving Analysis)	SE
4650	8	85.470934	I-26 EB (Weaving Analysis)	SE
4650	9	90.588126	I-26 EB (Weaving Analysis)	SE
4650	10	79.690886	I-26 EB (Weaving Analysis)	SE
4651	1	28.665885	I-26 WB (Weaving Analysis)	NW
4651	2	26.899479	I-26 WB (Weaving Analysis)	NW

Existing AM

ID	Run	Density	Name (Type)	Direction
4651	3	26.970834	I-26 WB (Weaving Analysis)	NW
4651	4	26.723275	I-26 WB (Weaving Analysis)	NW
4651	5	28.396483	I-26 WB (Weaving Analysis)	NW
4651	6	26.967921	I-26 WB (Weaving Analysis)	NW
4651	7	26.692694	I-26 WB (Weaving Analysis)	NW
4651	8	26.899479	I-26 WB (Weaving Analysis)	NW
4651	9	27.827097	I-26 WB (Weaving Analysis)	NW
4651	10	25.980598	I-26 WB (Weaving Analysis)	NW
4654	1	27.449857	I-26 WB (Basic Analysis)	NW
4654	2	29.011003	I-26 WB (Basic Analysis)	NW
4654	3	27.908796	I-26 WB (Basic Analysis)	NW
4654	4	28.395949	I-26 WB (Basic Analysis)	NW
4654	5	27.886225	I-26 WB (Basic Analysis)	NW
4654	6	29.921359	I-26 WB (Basic Analysis)	NW
4654	7	27.81287	I-26 WB (Basic Analysis)	NW
4654	8	28.531374	I-26 WB (Basic Analysis)	NW
4654	9	28.046102	I-26 WB (Basic Analysis)	NW
4654	10	29.313829	I-26 WB (Basic Analysis)	NW
4659	1	32.301759	I-26 WB (Basic Analysis)	NW
4659	2	34.973828	I-26 WB (Basic Analysis)	NW
4659	3	33.815492	I-26 WB (Basic Analysis)	NW
4659	4	36.862704	I-26 WB (Basic Analysis)	NW
4659	5	37.685386	I-26 WB (Basic Analysis)	NW
4659	6	32.387318	I-26 WB (Basic Analysis)	NW
4659	7	34.506545	I-26 WB (Basic Analysis)	NW
4659	8	36.02686	I-26 WB (Basic Analysis)	NW
4659	9	36.961426	I-26 WB (Basic Analysis)	NW
4659	10	34.236706	I-26 WB (Basic Analysis)	NW
4665	1	79.046462	I-26 EB (Basic Analysis)	SE
4665	2	72.380217	I-26 EB (Basic Analysis)	SE
4665	3	77.479121	I-26 EB (Basic Analysis)	SE
4665	4	76.268299	I-26 EB (Basic Analysis)	SE
4665	5	72.151506	I-26 EB (Basic Analysis)	SE
4665	6	76.685359	I-26 EB (Basic Analysis)	SE
4665	7	78.743756	I-26 EB (Basic Analysis)	SE
4665	8	76.127037	I-26 EB (Basic Analysis)	SE
4665	9	80.903054	I-26 EB (Basic Analysis)	SE
4665	10	71.176122	I-26 EB (Basic Analysis)	SE
4667	1	68.039503	I-26 EB (Merge Analysis)	SE
4667	2	59.151941	I-26 EB (Merge Analysis)	SE
4667	3	67.728829	I-26 EB (Merge Analysis)	SE
4667	4	65.224378	I-26 EB (Merge Analysis)	SE
4667	5	61.261855	I-26 EB (Merge Analysis)	SE
4667	6	64.684987	I-26 EB (Merge Analysis)	SE
4667	7	66.819679	I-26 EB (Merge Analysis)	SE
4667	8	62.807601	I-26 EB (Merge Analysis)	SE
4667	9	68.380673	I-26 EB (Merge Analysis)	SE
4667	10	60.878755	I-26 EB (Merge Analysis)	SE
4668	1	68.039503	I-26 EB (Merge Analysis)	SE
4668	2	59.151941	I-26 EB (Merge Analysis)	SE
4668	3	67.728829	I-26 EB (Merge Analysis)	SE
4668	4	65.224378	I-26 EB (Merge Analysis)	SE
4668	5	61.261855	I-26 EB (Merge Analysis)	SE
4668	6	64.684987	I-26 EB (Merge Analysis)	SE
4668	7	66.819679	I-26 EB (Merge Analysis)	SE
4668	8	62.807601	I-26 EB (Merge Analysis)	SE
4668	9	68.380673	I-26 EB (Merge Analysis)	SE
4668	10	60.878755	I-26 EB (Merge Analysis)	SE
4669	1	64.105087	I-26 EB (Basic Analysis)	SE
4669	2	54.182472	I-26 EB (Basic Analysis)	SE
4669	3	66.186132	I-26 EB (Basic Analysis)	SE
4669	4	62.700039	I-26 EB (Basic Analysis)	SE
4669	5	55.493393	I-26 EB (Basic Analysis)	SE
4669	6	61.010901	I-26 EB (Basic Analysis)	SE

Existing AM

ID	Run	Density	Name (Type)	Direction
4669	7	65.188394	I-26 EB (Basic Analysis)	SE
4669	8	57.004547	I-26 EB (Basic Analysis)	SE
4669	9	66.43086	I-26 EB (Basic Analysis)	SE
4669	10	57.105519	I-26 EB (Basic Analysis)	SE
4670	1	57.271722	I-26 EB (Diverge Analysis)	SE
4670	2	53.620238	I-26 EB (Diverge Analysis)	SE
4670	3	57.789791	I-26 EB (Diverge Analysis)	SE
4670	4	57.00587	I-26 EB (Diverge Analysis)	SE
4670	5	51.586586	I-26 EB (Diverge Analysis)	SE
4670	6	56.678668	I-26 EB (Diverge Analysis)	SE
4670	7	58.360123	I-26 EB (Diverge Analysis)	SE
4670	8	56.287843	I-26 EB (Diverge Analysis)	SE
4670	9	60.098384	I-26 EB (Diverge Analysis)	SE
4670	10	53.961073	I-26 EB (Diverge Analysis)	SE
4675	1	24.012261	I-26 WB (Merge Analysis)	NW
4675	2	23.986839	I-26 WB (Merge Analysis)	NW
4675	3	23.226128	I-26 WB (Merge Analysis)	NW
4675	4	24.454217	I-26 WB (Merge Analysis)	NW
4675	5	23.194839	I-26 WB (Merge Analysis)	NW
4675	6	22.971906	I-26 WB (Merge Analysis)	NW
4675	7	23.079461	I-26 WB (Merge Analysis)	NW
4675	8	23.556617	I-26 WB (Merge Analysis)	NW
4675	9	23.220261	I-26 WB (Merge Analysis)	NW
4675	10	22.774395	I-26 WB (Merge Analysis)	NW
4676	1	33.762377	I-26 WB (Basic Analysis)	NW
4676	2	33.803873	I-26 WB (Basic Analysis)	NW
4676	3	32.810447	I-26 WB (Basic Analysis)	NW
4676	4	33.686023	I-26 WB (Basic Analysis)	NW
4676	5	34.608075	I-26 WB (Basic Analysis)	NW
4676	6	34.08273	I-26 WB (Basic Analysis)	NW
4676	7	33.091793	I-26 WB (Basic Analysis)	NW
4676	8	33.664445	I-26 WB (Basic Analysis)	NW
4676	9	33.60552	I-26 WB (Basic Analysis)	NW
4676	10	33.414636	I-26 WB (Basic Analysis)	NW
4677	1	33.762377	I-26 WB (Basic Analysis)	NW
4677	2	33.803873	I-26 WB (Basic Analysis)	NW
4677	3	32.810447	I-26 WB (Basic Analysis)	NW
4677	4	33.686023	I-26 WB (Basic Analysis)	NW
4677	5	34.608075	I-26 WB (Basic Analysis)	NW
4677	6	34.08273	I-26 WB (Basic Analysis)	NW
4677	7	33.091793	I-26 WB (Basic Analysis)	NW
4677	8	33.664445	I-26 WB (Basic Analysis)	NW
4677	9	33.60552	I-26 WB (Basic Analysis)	NW
4677	10	33.414636	I-26 WB (Basic Analysis)	NW
4687	1	78.491778	I-26 EB (Basic Analysis)	SE
4687	2	72.442701	I-26 EB (Basic Analysis)	SE
4687	3	75.387929	I-26 EB (Basic Analysis)	SE
4687	4	81.42544	I-26 EB (Basic Analysis)	SE
4687	5	77.173241	I-26 EB (Basic Analysis)	SE
4687	6	73.244067	I-26 EB (Basic Analysis)	SE
4687	7	75.652297	I-26 EB (Basic Analysis)	SE
4687	8	76.061242	I-26 EB (Basic Analysis)	SE
4687	9	75.272268	I-26 EB (Basic Analysis)	SE
4687	10	72.77977	I-26 EB (Basic Analysis)	SE
4689	1	24.593683	I-26 WB (Basic Analysis)	NW
4689	2	24.590913	I-26 WB (Basic Analysis)	NW
4689	3	23.303702	I-26 WB (Basic Analysis)	NW
4689	4	24.202164	I-26 WB (Basic Analysis)	NW
4689	5	24.59276	I-26 WB (Basic Analysis)	NW
4689	6	24.311125	I-26 WB (Basic Analysis)	NW
4689	7	23.818956	I-26 WB (Basic Analysis)	NW
4689	8	23.610268	I-26 WB (Basic Analysis)	NW
4689	9	23.658285	I-26 WB (Basic Analysis)	NW
4689	10	24.246487	I-26 WB (Basic Analysis)	NW

Existing AM

ID	Run	Density	Name (Type)	Direction
4700	1	18.346976	I-26 WB (Merge Analysis)	NW
4700	2	19.470348	I-26 WB (Merge Analysis)	NW
4700	3	18.197193	I-26 WB (Merge Analysis)	NW
4700	4	18.238959	I-26 WB (Merge Analysis)	NW
4700	5	18.673906	I-26 WB (Merge Analysis)	NW
4700	6	19.301842	I-26 WB (Merge Analysis)	NW
4700	7	18.126622	I-26 WB (Merge Analysis)	NW
4700	8	18.159747	I-26 WB (Merge Analysis)	NW
4700	9	18.753118	I-26 WB (Merge Analysis)	NW
4700	10	18.76464	I-26 WB (Merge Analysis)	NW
4701	1	25.105502	I-26 WB (Basic Analysis)	NW
4701	2	28.926206	I-26 WB (Basic Analysis)	NW
4701	3	26.404541	I-26 WB (Basic Analysis)	NW
4701	4	24.612283	I-26 WB (Basic Analysis)	NW
4701	5	28.523295	I-26 WB (Basic Analysis)	NW
4701	6	25.93911	I-26 WB (Basic Analysis)	NW
4701	7	25.029088	I-26 WB (Basic Analysis)	NW
4701	8	27.932823	I-26 WB (Basic Analysis)	NW
4701	9	29.252703	I-26 WB (Basic Analysis)	NW
4701	10	27.849462	I-26 WB (Basic Analysis)	NW
4702	1	17.144456	I-26 WB (Diverge Analysis)	NW
4702	2	19.448826	I-26 WB (Diverge Analysis)	NW
4702	3	17.072442	I-26 WB (Diverge Analysis)	NW
4702	4	17.999159	I-26 WB (Diverge Analysis)	NW
4702	5	18.854684	I-26 WB (Diverge Analysis)	NW
4702	6	18.209963	I-26 WB (Diverge Analysis)	NW
4702	7	17.770771	I-26 WB (Diverge Analysis)	NW
4702	8	17.869157	I-26 WB (Diverge Analysis)	NW
4702	9	18.916654	I-26 WB (Diverge Analysis)	NW
4702	10	17.624035	I-26 WB (Diverge Analysis)	NW
4703	1	17.144456	I-26 WB (Diverge Analysis)	NW
4703	2	19.448826	I-26 WB (Diverge Analysis)	NW
4703	3	17.072442	I-26 WB (Diverge Analysis)	NW
4703	4	17.999159	I-26 WB (Diverge Analysis)	NW
4703	5	18.854684	I-26 WB (Diverge Analysis)	NW
4703	6	18.209963	I-26 WB (Diverge Analysis)	NW
4703	7	17.770771	I-26 WB (Diverge Analysis)	NW
4703	8	17.869157	I-26 WB (Diverge Analysis)	NW
4703	9	18.916654	I-26 WB (Diverge Analysis)	NW
4703	10	17.624035	I-26 WB (Diverge Analysis)	NW
4705	1	63.529746	I-26 EB (Merge Analysis)	SE
4705	2	57.557211	I-26 EB (Merge Analysis)	SE
4705	3	63.531999	I-26 EB (Merge Analysis)	SE
4705	4	65.864669	I-26 EB (Merge Analysis)	SE
4705	5	67.271032	I-26 EB (Merge Analysis)	SE
4705	6	60.563762	I-26 EB (Merge Analysis)	SE
4705	7	60.982967	I-26 EB (Merge Analysis)	SE
4705	8	58.33026	I-26 EB (Merge Analysis)	SE
4705	9	62.758951	I-26 EB (Merge Analysis)	SE
4705	10	62.380315	I-26 EB (Merge Analysis)	SE
4706	1	63.529746	I-26 EB (Merge Analysis)	SE
4706	2	57.557211	I-26 EB (Merge Analysis)	SE
4706	3	63.531999	I-26 EB (Merge Analysis)	SE
4706	4	65.864669	I-26 EB (Merge Analysis)	SE
4706	5	67.271032	I-26 EB (Merge Analysis)	SE
4706	6	60.563762	I-26 EB (Merge Analysis)	SE
4706	7	60.982967	I-26 EB (Merge Analysis)	SE
4706	8	58.33026	I-26 EB (Merge Analysis)	SE
4706	9	62.758951	I-26 EB (Merge Analysis)	SE
4706	10	62.380315	I-26 EB (Merge Analysis)	SE
4707	1	65.457314	I-26 EB (Diverge Analysis)	SE
4707	2	59.963182	I-26 EB (Diverge Analysis)	SE
4707	3	64.113847	I-26 EB (Diverge Analysis)	SE
4707	4	69.393846	I-26 EB (Diverge Analysis)	SE

Existing AM

ID	Run	Density	Name (Type)	Direction
4707	5	67.545846	I-26 EB (Diverge Analysis)	SE
4707	6	60.828515	I-26 EB (Diverge Analysis)	SE
4707	7	61.555981	I-26 EB (Diverge Analysis)	SE
4707	8	59.910382	I-26 EB (Diverge Analysis)	SE
4707	9	63.999447	I-26 EB (Diverge Analysis)	SE
4707	10	62.870115	I-26 EB (Diverge Analysis)	SE
4712	1	24.353938	I-26 WB (Basic Analysis)	NW
4712	2	21.314587	I-26 WB (Basic Analysis)	NW
4712	3	21.160663	I-26 WB (Basic Analysis)	NW
4712	4	22.33727	I-26 WB (Basic Analysis)	NW
4712	5	22.624247	I-26 WB (Basic Analysis)	NW
4712	6	22.245959	I-26 WB (Basic Analysis)	NW
4712	7	22.715558	I-26 WB (Basic Analysis)	NW
4712	8	22.094644	I-26 WB (Basic Analysis)	NW
4712	9	22.295528	I-26 WB (Basic Analysis)	NW
4712	10	23.967823	I-26 WB (Basic Analysis)	NW
4714	1	67.1668	I-26 EB (Basic Analysis)	SE
4714	2	53.63737	I-26 EB (Basic Analysis)	SE
4714	3	67.695956	I-26 EB (Basic Analysis)	SE
4714	4	64.338643	I-26 EB (Basic Analysis)	SE
4714	5	65.84648	I-26 EB (Basic Analysis)	SE
4714	6	63.971317	I-26 EB (Basic Analysis)	SE
4714	7	55.846467	I-26 EB (Basic Analysis)	SE
4714	8	58.637377	I-26 EB (Basic Analysis)	SE
4714	9	68.868575	I-26 EB (Basic Analysis)	SE
4714	10	64.414421	I-26 EB (Basic Analysis)	SE
4718	1	49.171496	I-26 EB (Merge Analysis)	SE
4718	2	35.597533	I-26 EB (Merge Analysis)	SE
4718	3	48.362597	I-26 EB (Merge Analysis)	SE
4718	4	43.250196	I-26 EB (Merge Analysis)	SE
4718	5	41.831634	I-26 EB (Merge Analysis)	SE
4718	6	43.851889	I-26 EB (Merge Analysis)	SE
4718	7	33.69682	I-26 EB (Merge Analysis)	SE
4718	8	47.173157	I-26 EB (Merge Analysis)	SE
4718	9	53.797761	I-26 EB (Merge Analysis)	SE
4718	10	45.814366	I-26 EB (Merge Analysis)	SE
4719	1	49.171496	I-26 EB (Merge Analysis)	SE
4719	2	35.597533	I-26 EB (Merge Analysis)	SE
4719	3	48.362597	I-26 EB (Merge Analysis)	SE
4719	4	43.250196	I-26 EB (Merge Analysis)	SE
4719	5	41.831634	I-26 EB (Merge Analysis)	SE
4719	6	43.851889	I-26 EB (Merge Analysis)	SE
4719	7	33.69682	I-26 EB (Merge Analysis)	SE
4719	8	47.173157	I-26 EB (Merge Analysis)	SE
4719	9	53.797761	I-26 EB (Merge Analysis)	SE
4719	10	45.814366	I-26 EB (Merge Analysis)	SE
4720	1	55.27865	I-26 EB (Diverge Analysis)	SE
4720	2	38.587988	I-26 EB (Diverge Analysis)	SE
4720	3	53.794384	I-26 EB (Diverge Analysis)	SE
4720	4	50.954918	I-26 EB (Diverge Analysis)	SE
4720	5	48.270919	I-26 EB (Diverge Analysis)	SE
4720	6	50.916785	I-26 EB (Diverge Analysis)	SE
4720	7	38.274122	I-26 EB (Diverge Analysis)	SE
4720	8	46.771986	I-26 EB (Diverge Analysis)	SE
4720	9	55.777316	I-26 EB (Diverge Analysis)	SE
4720	10	49.411985	I-26 EB (Diverge Analysis)	SE
4725	1	20.267334	I-26 WB (Merge Analysis)	NW
4725	2	20.749221	I-26 WB (Merge Analysis)	NW
4725	3	21.252161	I-26 WB (Merge Analysis)	NW
4725	4	18.395927	I-26 WB (Merge Analysis)	NW
4725	5	18.962027	I-26 WB (Merge Analysis)	NW
4725	6	20.21587	I-26 WB (Merge Analysis)	NW
4725	7	19.542164	I-26 WB (Merge Analysis)	NW
4725	8	19.291863	I-26 WB (Merge Analysis)	NW

Existing AM

ID	Run	Density	Name (Type)	Direction
4725	9	20.131657	I-26 WB (Merge Analysis)	NW
4725	10	19.380755	I-26 WB (Merge Analysis)	NW
4726	1		I-26 WB (Basic Analysis)	NW
4726	2		I-26 WB (Basic Analysis)	NW
4726	3		I-26 WB (Basic Analysis)	NW
4726	4		I-26 WB (Basic Analysis)	NW
4726	5		I-26 WB (Basic Analysis)	NW
4726	6		I-26 WB (Basic Analysis)	NW
4726	7		I-26 WB (Basic Analysis)	NW
4726	8		I-26 WB (Basic Analysis)	NW
4726	9		I-26 WB (Basic Analysis)	NW
4726	10		I-26 WB (Basic Analysis)	NW
4727	1	21.887568	I-26 WB (Diverge Analysis)	NW
4727	2	21.506779	I-26 WB (Diverge Analysis)	NW
4727	3	21.404941	I-26 WB (Diverge Analysis)	NW
4727	4	21.486629	I-26 WB (Diverge Analysis)	NW
4727	5	22.917942	I-26 WB (Diverge Analysis)	NW
4727	6	22.636909	I-26 WB (Diverge Analysis)	NW
4727	7	20.825021	I-26 WB (Diverge Analysis)	NW
4727	8	22.344272	I-26 WB (Diverge Analysis)	NW
4727	9	21.973984	I-26 WB (Diverge Analysis)	NW
4727	10	23.487662	I-26 WB (Diverge Analysis)	NW
4728	1	20.956092	I-26 WB (Basic Analysis)	NW
4728	2	25.230477	I-26 WB (Basic Analysis)	NW
4728	3	21.149503	I-26 WB (Basic Analysis)	NW
4728	4	22.928885	I-26 WB (Basic Analysis)	NW
4728	5	23.963634	I-26 WB (Basic Analysis)	NW
4728	6	24.950031	I-26 WB (Basic Analysis)	NW
4728	7	19.36045	I-26 WB (Basic Analysis)	NW
4728	8	19.553861	I-26 WB (Basic Analysis)	NW
4728	9	23.499448	I-26 WB (Basic Analysis)	NW
4728	10	21.826442	I-26 WB (Basic Analysis)	NW
4729	1	15.604653	I-26 WB (Diverge Analysis)	NW
4729	2	15.862708	I-26 WB (Diverge Analysis)	NW
4729	3	15.040018	I-26 WB (Diverge Analysis)	NW
4729	4	17.415454	I-26 WB (Diverge Analysis)	NW
4729	5	16.319269	I-26 WB (Diverge Analysis)	NW
4729	6	16.023718	I-26 WB (Diverge Analysis)	NW
4729	7	16.257512	I-26 WB (Diverge Analysis)	NW
4729	8	15.037812	I-26 WB (Diverge Analysis)	NW
4729	9	17.785996	I-26 WB (Diverge Analysis)	NW
4729	10	15.309102	I-26 WB (Diverge Analysis)	NW
4730	1	15.604653	I-26 WB (Diverge Analysis)	NW
4730	2	15.862708	I-26 WB (Diverge Analysis)	NW
4730	3	15.040018	I-26 WB (Diverge Analysis)	NW
4730	4	17.415454	I-26 WB (Diverge Analysis)	NW
4730	5	16.319269	I-26 WB (Diverge Analysis)	NW
4730	6	16.023718	I-26 WB (Diverge Analysis)	NW
4730	7	16.257512	I-26 WB (Diverge Analysis)	NW
4730	8	15.037812	I-26 WB (Diverge Analysis)	NW
4730	9	17.785996	I-26 WB (Diverge Analysis)	NW
4730	10	15.309102	I-26 WB (Diverge Analysis)	NW
4732	1	18.929821	I-26 WB (Basic Analysis)	NW
4732	2	17.312308	I-26 WB (Basic Analysis)	NW
4732	3	17.245755	I-26 WB (Basic Analysis)	NW
4732	4	16.933248	I-26 WB (Basic Analysis)	NW
4732	5	16.901419	I-26 WB (Basic Analysis)	NW
4732	6	18.290339	I-26 WB (Basic Analysis)	NW
4732	7	18.168808	I-26 WB (Basic Analysis)	NW
4732	8	17.190777	I-26 WB (Basic Analysis)	NW
4732	9	16.967971	I-26 WB (Basic Analysis)	NW
4732	10	18.359785	I-26 WB (Basic Analysis)	NW
4733	1	29.67477	I-26 EB (Basic Analysis)	SE
4733	2	26.512822	I-26 EB (Basic Analysis)	SE

Existing AM

ID	Run	Density	Name (Type)	Direction
4733	3	29.355198	I-26 EB (Basic Analysis)	SE
4733	4	27.475436	I-26 EB (Basic Analysis)	SE
4733	5	27.722261	I-26 EB (Basic Analysis)	SE
4733	6	26.438774	I-26 EB (Basic Analysis)	SE
4733	7	27.471539	I-26 EB (Basic Analysis)	SE
4733	8	30.6153	I-26 EB (Basic Analysis)	SE
4733	9	37.496501	I-26 EB (Basic Analysis)	SE
4733	10	29.035625	I-26 EB (Basic Analysis)	SE
4736	1	30.606956	I-26 EB (Basic Analysis)	SE
4736	2	30.536606	I-26 EB (Basic Analysis)	SE
4736	3	30.436107	I-26 EB (Basic Analysis)	SE
4736	4	30.059236	I-26 EB (Basic Analysis)	SE
4736	5	28.908523	I-26 EB (Basic Analysis)	SE
4736	6	30.149685	I-26 EB (Basic Analysis)	SE
4736	7	30.767754	I-26 EB (Basic Analysis)	SE
4736	8	30.777804	I-26 EB (Basic Analysis)	SE
4736	9	30.375808	I-26 EB (Basic Analysis)	SE
4736	10	30.742629	I-26 EB (Basic Analysis)	SE
4737	1	23.747727	I-26 EB (Diverge Analysis)	SE
4737	2	25.190577	I-26 EB (Diverge Analysis)	SE
4737	3	24.323384	I-26 EB (Diverge Analysis)	SE
4737	4	25.185635	I-26 EB (Diverge Analysis)	SE
4737	5	24.185029	I-26 EB (Diverge Analysis)	SE
4737	6	24.175146	I-26 EB (Diverge Analysis)	SE
4737	7	25.294343	I-26 EB (Diverge Analysis)	SE
4737	8	24.46174	I-26 EB (Diverge Analysis)	SE
4737	9	24.73598	I-26 EB (Diverge Analysis)	SE
4737	10	24.97069	I-26 EB (Diverge Analysis)	SE
4739	1	14.847262	I-26 WB (Weaving Analysis)	NW
4739	2	16.080988	I-26 WB (Weaving Analysis)	NW
4739	3	16.591496	I-26 WB (Weaving Analysis)	NW
4739	4	13.258307	I-26 WB (Weaving Analysis)	NW
4739	5	16.006539	I-26 WB (Weaving Analysis)	NW
4739	6	14.998287	I-26 WB (Weaving Analysis)	NW
4739	7	15.240778	I-26 WB (Weaving Analysis)	NW
4739	8	15.489651	I-26 WB (Weaving Analysis)	NW
4739	9	15.02594	I-26 WB (Weaving Analysis)	NW
4739	10	15.355642	I-26 WB (Weaving Analysis)	NW
4741	1	18.115412	I-26 WB (Basic Analysis)	NW
4741	2	18.729768	I-26 WB (Basic Analysis)	NW
4741	3	19.327956	I-26 WB (Basic Analysis)	NW
4741	4	19.376458	I-26 WB (Basic Analysis)	NW
4741	5	20.306075	I-26 WB (Basic Analysis)	NW
4741	6	21.179107	I-26 WB (Basic Analysis)	NW
4741	7	17.169627	I-26 WB (Basic Analysis)	NW
4741	8	17.589976	I-26 WB (Basic Analysis)	NW
4741	9	18.551928	I-26 WB (Basic Analysis)	NW
4741	10	18.681266	I-26 WB (Basic Analysis)	NW
4742	1	13.417991	I-26 WB (Diverge Analysis)	NW
4742	2	13.510226	I-26 WB (Diverge Analysis)	NW
4742	3	12.539445	I-26 WB (Diverge Analysis)	NW
4742	4	12.61554	I-26 WB (Diverge Analysis)	NW
4742	5	13.489473	I-26 WB (Diverge Analysis)	NW
4742	6	14.029052	I-26 WB (Diverge Analysis)	NW
4742	7	12.00909	I-26 WB (Diverge Analysis)	NW
4742	8	12.331915	I-26 WB (Diverge Analysis)	NW
4742	9	13.383402	I-26 WB (Diverge Analysis)	NW
4742	10	13.337284	I-26 WB (Diverge Analysis)	NW
4745	1	24.419118	I-26 EB (Basic Analysis)	SE
4745	2	24.271939	I-26 EB (Basic Analysis)	SE
4745	3	22.518322	I-26 EB (Basic Analysis)	SE
4745	4	24.300122	I-26 EB (Basic Analysis)	SE
4745	5	23.207243	I-26 EB (Basic Analysis)	SE
4745	6	23.366948	I-26 EB (Basic Analysis)	SE

Existing AM

ID	Run	Density	Name (Type)	Direction
4745	7	24.550639	I-26 EB (Basic Analysis)	SE
4745	8	24.860654	I-26 EB (Basic Analysis)	SE
4745	9	24.481747	I-26 EB (Basic Analysis)	SE
4745	10	23.642516	I-26 EB (Basic Analysis)	SE
4748	1	26.213736	I-26 EB (Weaving Analysis)	SE
4748	2	26.433486	I-26 EB (Weaving Analysis)	SE
4748	3	25.672289	I-26 EB (Weaving Analysis)	SE
4748	4	25.307549	I-26 EB (Weaving Analysis)	SE
4748	5	27.011181	I-26 EB (Weaving Analysis)	SE
4748	6	26.014375	I-26 EB (Weaving Analysis)	SE
4748	7	25.549954	I-26 EB (Weaving Analysis)	SE
4748	8	25.799155	I-26 EB (Weaving Analysis)	SE
4748	9	24.818207	I-26 EB (Weaving Analysis)	SE
4748	10	25.441211	I-26 EB (Weaving Analysis)	SE
4753	1	15.108537	I-26 WB (Basic Analysis)	NW
4753	2	16.687947	I-26 WB (Basic Analysis)	NW
4753	3	13.716337	I-26 WB (Basic Analysis)	NW
4753	4	16.977988	I-26 WB (Basic Analysis)	NW
4753	5	15.849462	I-26 WB (Basic Analysis)	NW
4753	6	14.61283	I-26 WB (Basic Analysis)	NW
4753	7	16.498101	I-26 WB (Basic Analysis)	NW
4753	8	15.190277	I-26 WB (Basic Analysis)	NW
4753	9	16.964805	I-26 WB (Basic Analysis)	NW
4753	10	15.105901	I-26 WB (Basic Analysis)	NW
4755	1	25.973501	I-26 EB (Basic Analysis)	SE
4755	2	25.245975	I-26 EB (Basic Analysis)	SE
4755	3	25.521933	I-26 EB (Basic Analysis)	SE
4755	4	26.646671	I-26 EB (Basic Analysis)	SE
4755	5	24.995104	I-26 EB (Basic Analysis)	SE
4755	6	24.781864	I-26 EB (Basic Analysis)	SE
4755	7	26.780469	I-26 EB (Basic Analysis)	SE
4755	8	27.077333	I-26 EB (Basic Analysis)	SE
4755	9	25.559564	I-26 EB (Basic Analysis)	SE
4755	10	26.082211	I-26 EB (Basic Analysis)	SE
4756	1	22.443535	I-26 EB (Diverge Analysis)	SE
4756	2	22.89994	I-26 EB (Diverge Analysis)	SE
4756	3	22.771953	I-26 EB (Diverge Analysis)	SE
4756	4	21.743231	I-26 EB (Diverge Analysis)	SE
4756	5	22.851643	I-26 EB (Diverge Analysis)	SE
4756	6	22.636722	I-26 EB (Diverge Analysis)	SE
4756	7	22.991704	I-26 EB (Diverge Analysis)	SE
4756	8	22.694678	I-26 EB (Diverge Analysis)	SE
4756	9	22.460439	I-26 EB (Diverge Analysis)	SE
4756	10	22.557032	I-26 EB (Diverge Analysis)	SE
4760	1	19.017707	I-26 WB (Merge Analysis)	NW
4760	2	18.669092	I-26 WB (Merge Analysis)	NW
4760	3	19.434762	I-26 WB (Merge Analysis)	NW
4760	4	18.256315	I-26 WB (Merge Analysis)	NW
4760	5	18.731116	I-26 WB (Merge Analysis)	NW
4760	6	19.682856	I-26 WB (Merge Analysis)	NW
4760	7	20.395058	I-26 WB (Merge Analysis)	NW
4760	8	18.874411	I-26 WB (Merge Analysis)	NW
4760	9	17.757987	I-26 WB (Merge Analysis)	NW
4760	10	19.719215	I-26 WB (Merge Analysis)	NW
4761	1	19.017707	I-26 WB (Merge Analysis)	NW
4761	2	18.669092	I-26 WB (Merge Analysis)	NW
4761	3	19.434762	I-26 WB (Merge Analysis)	NW
4761	4	18.256315	I-26 WB (Merge Analysis)	NW
4761	5	18.731116	I-26 WB (Merge Analysis)	NW
4761	6	19.682856	I-26 WB (Merge Analysis)	NW
4761	7	20.395058	I-26 WB (Merge Analysis)	NW
4761	8	18.874411	I-26 WB (Merge Analysis)	NW
4761	9	17.757987	I-26 WB (Merge Analysis)	NW
4761	10	19.719215	I-26 WB (Merge Analysis)	NW

Existing AM

ID	Run	Density	Name (Type)	Direction
4764	1	23.598368	I-26 WB (Basic Analysis)	NW
4764	2	23.700192	I-26 WB (Basic Analysis)	NW
4764	3	22.94908	I-26 WB (Basic Analysis)	NW
4764	4	24.087771	I-26 WB (Basic Analysis)	NW
4764	5	23.261051	I-26 WB (Basic Analysis)	NW
4764	6	23.895173	I-26 WB (Basic Analysis)	NW
4764	7	22.994576	I-26 WB (Basic Analysis)	NW
4764	8	22.733735	I-26 WB (Basic Analysis)	NW
4764	9	23.548973	I-26 WB (Basic Analysis)	NW
4764	10	23.633681	I-26 WB (Basic Analysis)	NW
4768	1	50.28308	I-26 EB (Basic Analysis)	SE
4768	2	50.020927	I-26 EB (Basic Analysis)	SE
4768	3	49.949312	I-26 EB (Basic Analysis)	SE
4768	4	52.730567	I-26 EB (Basic Analysis)	SE
4768	5	51.27961	I-26 EB (Basic Analysis)	SE
4768	6	48.492061	I-26 EB (Basic Analysis)	SE
4768	7	50.893324	I-26 EB (Basic Analysis)	SE
4768	8	49.071055	I-26 EB (Basic Analysis)	SE
4768	9	47.405688	I-26 EB (Basic Analysis)	SE
4768	10	50.279174	I-26 EB (Basic Analysis)	SE
4769	1	42.858321	I-26 EB (Diverge Analysis)	SE
4769	2	39.240563	I-26 EB (Diverge Analysis)	SE
4769	3	41.569055	I-26 EB (Diverge Analysis)	SE
4769	4	40.907493	I-26 EB (Diverge Analysis)	SE
4769	5	42.946877	I-26 EB (Diverge Analysis)	SE
4769	6	39.795338	I-26 EB (Diverge Analysis)	SE
4769	7	42.037879	I-26 EB (Diverge Analysis)	SE
4769	8	42.269687	I-26 EB (Diverge Analysis)	SE
4769	9	38.469608	I-26 EB (Diverge Analysis)	SE
4769	10	42.261873	I-26 EB (Diverge Analysis)	SE
6149	1	15.569621	I-26 EB (Merge Analysis)	S
6149	2	15.472117	I-26 EB (Merge Analysis)	S
6149	3	15.058464	I-26 EB (Merge Analysis)	S
6149	4	14.962437	I-26 EB (Merge Analysis)	S
6149	5	15.723264	I-26 EB (Merge Analysis)	S
6149	6	14.4956	I-26 EB (Merge Analysis)	S
6149	7	16.269878	I-26 EB (Merge Analysis)	S
6149	8	14.770384	I-26 EB (Merge Analysis)	S
6149	9	15.023008	I-26 EB (Merge Analysis)	S
6149	10	14.828	I-26 EB (Merge Analysis)	S
6150	1	15.569621	I-26 EB (Merge Analysis)	S
6150	2	15.472117	I-26 EB (Merge Analysis)	S
6150	3	15.058464	I-26 EB (Merge Analysis)	S
6150	4	14.962437	I-26 EB (Merge Analysis)	S
6150	5	15.723264	I-26 EB (Merge Analysis)	S
6150	6	14.4956	I-26 EB (Merge Analysis)	S
6150	7	16.269878	I-26 EB (Merge Analysis)	S
6150	8	14.770384	I-26 EB (Merge Analysis)	S
6150	9	15.023008	I-26 EB (Merge Analysis)	S
6150	10	14.828	I-26 EB (Merge Analysis)	S
6151	1	19.283785	I-26 EB (Basic Analysis)	S
6151	2	20.000932	I-26 EB (Basic Analysis)	S
6151	3	19.711558	I-26 EB (Basic Analysis)	S
6151	4	19.78666	I-26 EB (Basic Analysis)	S
6151	5	20.155199	I-26 EB (Basic Analysis)	S
6151	6	18.993239	I-26 EB (Basic Analysis)	S
6151	7	21.051255	I-26 EB (Basic Analysis)	S
6151	8	18.937773	I-26 EB (Basic Analysis)	S
6151	9	19.589701	I-26 EB (Basic Analysis)	S
6151	10	19.781365	I-26 EB (Basic Analysis)	S
6152	1	19.283785	I-26 EB (Basic Analysis)	S
6152	2	20.000932	I-26 EB (Basic Analysis)	S
6152	3	19.711558	I-26 EB (Basic Analysis)	S
6152	4	19.78666	I-26 EB (Basic Analysis)	S

Existing AM

ID	Run	Density	Name (Type)	Direction
6152	5	20.155199	I-26 EB (Basic Analysis)	S
6152	6	18.993239	I-26 EB (Basic Analysis)	S
6152	7	21.051255	I-26 EB (Basic Analysis)	S
6152	8	18.937773	I-26 EB (Basic Analysis)	S
6152	9	19.589701	I-26 EB (Basic Analysis)	S
6152	10	19.781365	I-26 EB (Basic Analysis)	S
6159	1	23.361453	I-26 WB (Diverge Analysis)	N
6159	2	23.256918	I-26 WB (Diverge Analysis)	N
6159	3	22.286835	I-26 WB (Diverge Analysis)	N
6159	4	22.408095	I-26 WB (Diverge Analysis)	N
6159	5	23.340546	I-26 WB (Diverge Analysis)	N
6159	6	23.0813	I-26 WB (Diverge Analysis)	N
6159	7	21.199672	I-26 WB (Diverge Analysis)	N
6159	8	22.615074	I-26 WB (Diverge Analysis)	N
6159	9	22.548172	I-26 WB (Diverge Analysis)	N
6159	10	22.270109	I-26 WB (Diverge Analysis)	N
6160	1	23.361453	I-26 WB (Diverge Analysis)	N
6160	2	23.256918	I-26 WB (Diverge Analysis)	N
6160	3	22.286835	I-26 WB (Diverge Analysis)	N
6160	4	22.408095	I-26 WB (Diverge Analysis)	N
6160	5	23.340546	I-26 WB (Diverge Analysis)	N
6160	6	23.0813	I-26 WB (Diverge Analysis)	N
6160	7	21.199672	I-26 WB (Diverge Analysis)	N
6160	8	22.615074	I-26 WB (Diverge Analysis)	N
6160	9	22.548172	I-26 WB (Diverge Analysis)	N
6160	10	22.270109	I-26 WB (Diverge Analysis)	N
6165	1	16.285886	I-26 WB (Basic Analysis)	N
6165	2	15.36372	I-26 WB (Basic Analysis)	N
6165	3	16.459578	I-26 WB (Basic Analysis)	N
6165	4	16.499573	I-26 WB (Basic Analysis)	N
6165	5	15.139749	I-26 WB (Basic Analysis)	N
6165	6	16.424154	I-26 WB (Basic Analysis)	N
6165	7	15.212882	I-26 WB (Basic Analysis)	N
6165	8	15.850514	I-26 WB (Basic Analysis)	N
6165	9	16.367018	I-26 WB (Basic Analysis)	N
6165	10	16.385302	I-26 WB (Basic Analysis)	N
6166	1	15.750011	I-26 EB (Basic Analysis)	S
6166	2	15.532116	I-26 EB (Basic Analysis)	S
6166	3	15.718421	I-26 EB (Basic Analysis)	S
6166	4	16.483889	I-26 EB (Basic Analysis)	S
6166	5	15.453544	I-26 EB (Basic Analysis)	S
6166	6	15.6844	I-26 EB (Basic Analysis)	S
6166	7	16.168791	I-26 EB (Basic Analysis)	S
6166	8	15.24618	I-26 EB (Basic Analysis)	S
6166	9	16.186612	I-26 EB (Basic Analysis)	S
6166	10	15.617978	I-26 EB (Basic Analysis)	S
6174	1	16.036653	I-26 WB (Basic Analysis)	N
6174	2	15.341654	I-26 WB (Basic Analysis)	N
6174	3	15.673861	I-26 WB (Basic Analysis)	N
6174	4	16.442157	I-26 WB (Basic Analysis)	N
6174	5	15.530959	I-26 WB (Basic Analysis)	N
6174	6	15.375402	I-26 WB (Basic Analysis)	N
6174	7	15.090653	I-26 WB (Basic Analysis)	N
6174	8	15.756122	I-26 WB (Basic Analysis)	N
6174	9	15.446589	I-26 WB (Basic Analysis)	N
6174	10	15.555215	I-26 WB (Basic Analysis)	N
6175	1	16.036653	I-26 WB (Basic Analysis)	N
6175	2	15.341654	I-26 WB (Basic Analysis)	N
6175	3	15.673861	I-26 WB (Basic Analysis)	N
6175	4	16.442157	I-26 WB (Basic Analysis)	N
6175	5	15.530959	I-26 WB (Basic Analysis)	N
6175	6	15.375402	I-26 WB (Basic Analysis)	N
6175	7	15.090653	I-26 WB (Basic Analysis)	N
6175	8	15.756122	I-26 WB (Basic Analysis)	N

Existing AM

ID	Run	Density	Name (Type)	Direction
6175	9	15.446589	I-26 WB (Basic Analysis)	N
6175	10	15.555215	I-26 WB (Basic Analysis)	N
6177	1	26.171807	I-26 EB (Basic Analysis)	S
6177	2	25.400858	I-26 EB (Basic Analysis)	S
6177	3	26.389831	I-26 EB (Basic Analysis)	S
6177	4	24.971554	I-26 EB (Basic Analysis)	S
6177	5	25.108662	I-26 EB (Basic Analysis)	S
6177	6	24.87041	I-26 EB (Basic Analysis)	S
6177	7	25.466041	I-26 EB (Basic Analysis)	S
6177	8	25.441316	I-26 EB (Basic Analysis)	S
6177	9	26.239237	I-26 EB (Basic Analysis)	S
6177	10	25.315447	I-26 EB (Basic Analysis)	S
6178	1	23.733695	I-26 EB (Diverge Analysis)	S
6178	2	25.195923	I-26 EB (Diverge Analysis)	S
6178	3	33.919504	I-26 EB (Diverge Analysis)	S
6178	4	34.160588	I-26 EB (Diverge Analysis)	S
6178	5	35.635919	I-26 EB (Diverge Analysis)	S
6178	6	27.596284	I-26 EB (Diverge Analysis)	S
6178	7	23.178153	I-26 EB (Diverge Analysis)	S
6178	8	28.240922	I-26 EB (Diverge Analysis)	S
6178	9	55.250218	I-26 EB (Diverge Analysis)	S
6178	10	38.819803	I-26 EB (Diverge Analysis)	S
6185	1	32.92185	I-26 EB (Merge Analysis)	S
6185	2	32.537972	I-26 EB (Merge Analysis)	S
6185	3	32.727046	I-26 EB (Merge Analysis)	S
6185	4	31.331907	I-26 EB (Merge Analysis)	S
6185	5	32.182741	I-26 EB (Merge Analysis)	S
6185	6	31.629842	I-26 EB (Merge Analysis)	S
6185	7	31.271747	I-26 EB (Merge Analysis)	S
6185	8	31.515251	I-26 EB (Merge Analysis)	S
6185	9	34.534711	I-26 EB (Merge Analysis)	S
6185	10	30.131571	I-26 EB (Merge Analysis)	S
6186	1	31.363499	I-26 EB (Basic Analysis)	S
6186	2	31.188141	I-26 EB (Basic Analysis)	S
6186	3	32.568683	I-26 EB (Basic Analysis)	S
6186	4	30.909163	I-26 EB (Basic Analysis)	S
6186	5	30.71627	I-26 EB (Basic Analysis)	S
6186	6	31.510162	I-26 EB (Basic Analysis)	S
6186	7	30.542506	I-26 EB (Basic Analysis)	S
6186	8	30.435698	I-26 EB (Basic Analysis)	S
6186	9	32.913022	I-26 EB (Basic Analysis)	S
6186	10	29.992521	I-26 EB (Basic Analysis)	S
6200	1	25.432518	I-26 WB (Weaving Analysis)	NW
6200	2	24.834721	I-26 WB (Weaving Analysis)	NW
6200	3	23.869425	I-26 WB (Weaving Analysis)	NW
6200	4	23.407194	I-26 WB (Weaving Analysis)	NW
6200	5	24.735088	I-26 WB (Weaving Analysis)	NW
6200	6	24.864121	I-26 WB (Weaving Analysis)	NW
6200	7	23.784493	I-26 WB (Weaving Analysis)	NW
6200	8	24.592989	I-26 WB (Weaving Analysis)	NW
6200	9	24.246724	I-26 WB (Weaving Analysis)	NW
6200	10	23.113196	I-26 WB (Weaving Analysis)	NW
6204	1	25.158437	I-26 WB (Basic Analysis)	NW
6204	2	26.446901	I-26 WB (Basic Analysis)	NW
6204	3	25.938193	I-26 WB (Basic Analysis)	NW
6204	4	26.258345	I-26 WB (Basic Analysis)	NW
6204	5	24.639908	I-26 WB (Basic Analysis)	NW
6204	6	26.142462	I-26 WB (Basic Analysis)	NW
6204	7	26.124785	I-26 WB (Basic Analysis)	NW
6204	8	25.209504	I-26 WB (Basic Analysis)	NW
6204	9	27.191303	I-26 WB (Basic Analysis)	NW
6204	10	26.715985	I-26 WB (Basic Analysis)	NW
6205	1	27.704282	I-20 EB (Basic Analysis)	E
6205	2	28.522626	I-20 EB (Basic Analysis)	E

Existing AM

ID	Run	Density	Name (Type)	Direction
6205	3	27.737458	I-20 EB (Basic Analysis)	E
6205	4	29.02248	I-20 EB (Basic Analysis)	E
6205	5	28.593402	I-20 EB (Basic Analysis)	E
6205	6	29.219325	I-20 EB (Basic Analysis)	E
6205	7	26.379448	I-20 EB (Basic Analysis)	E
6205	8	28.038255	I-20 EB (Basic Analysis)	E
6205	9	27.51186	I-20 EB (Basic Analysis)	E
6205	10	28.469544	I-20 EB (Basic Analysis)	E
6206	1	24.040128	I-20 EB (Merge Analysis)	E
6206	2	24.33818	I-20 EB (Merge Analysis)	E
6206	3	25.358682	I-20 EB (Merge Analysis)	E
6206	4	24.309022	I-20 EB (Merge Analysis)	E
6206	5	25.118945	I-20 EB (Merge Analysis)	E
6206	6	24.723703	I-20 EB (Merge Analysis)	E
6206	7	24.475866	I-20 EB (Merge Analysis)	E
6206	8	23.826308	I-20 EB (Merge Analysis)	E
6206	9	24.273386	I-20 EB (Merge Analysis)	E
6206	10	24.174575	I-20 EB (Merge Analysis)	E
6207	1	24.040128	I-20 EB (Merge Analysis)	E
6207	2	24.33818	I-20 EB (Merge Analysis)	E
6207	3	25.358682	I-20 EB (Merge Analysis)	E
6207	4	24.309022	I-20 EB (Merge Analysis)	E
6207	5	25.118945	I-20 EB (Merge Analysis)	E
6207	6	24.723703	I-20 EB (Merge Analysis)	E
6207	7	24.475866	I-20 EB (Merge Analysis)	E
6207	8	23.826308	I-20 EB (Merge Analysis)	E
6207	9	24.273386	I-20 EB (Merge Analysis)	E
6207	10	24.174575	I-20 EB (Merge Analysis)	E
6208	1	24.769871	I-20 EB (Diverge Analysis)	E
6208	2	25.180661	I-20 EB (Diverge Analysis)	E
6208	3	26.12473	I-20 EB (Diverge Analysis)	E
6208	4	25.461492	I-20 EB (Diverge Analysis)	E
6208	5	25.8678	I-20 EB (Diverge Analysis)	E
6208	6	25.21203	I-20 EB (Diverge Analysis)	E
6208	7	25.459998	I-20 EB (Diverge Analysis)	E
6208	8	24.71012	I-20 EB (Diverge Analysis)	E
6208	9	24.837091	I-20 EB (Diverge Analysis)	E
6208	10	24.973025	I-20 EB (Diverge Analysis)	E
6209	1	24.769871	I-20 EB (Diverge Analysis)	E
6209	2	25.180661	I-20 EB (Diverge Analysis)	E
6209	3	26.12473	I-20 EB (Diverge Analysis)	E
6209	4	25.461492	I-20 EB (Diverge Analysis)	E
6209	5	25.8678	I-20 EB (Diverge Analysis)	E
6209	6	25.21203	I-20 EB (Diverge Analysis)	E
6209	7	25.459998	I-20 EB (Diverge Analysis)	E
6209	8	24.71012	I-20 EB (Diverge Analysis)	E
6209	9	24.837091	I-20 EB (Diverge Analysis)	E
6209	10	24.973025	I-20 EB (Diverge Analysis)	E
6216	1	19.541484	I-20 EB (Merge Analysis)	E
6216	2	17.891811	I-20 EB (Merge Analysis)	E
6216	3	18.956954	I-20 EB (Merge Analysis)	E
6216	4	18.717946	I-20 EB (Merge Analysis)	E
6216	5	19.133612	I-20 EB (Merge Analysis)	E
6216	6	18.917985	I-20 EB (Merge Analysis)	E
6216	7	19.094643	I-20 EB (Merge Analysis)	E
6216	8	19.105035	I-20 EB (Merge Analysis)	E
6216	9	19.647998	I-20 EB (Merge Analysis)	E
6216	10	18.842646	I-20 EB (Merge Analysis)	E
6217	1	21.842512	I-20 EB (Basic Analysis)	E
6217	2	22.47764	I-20 EB (Basic Analysis)	E
6217	3	20.587025	I-20 EB (Basic Analysis)	E
6217	4	23.056641	I-20 EB (Basic Analysis)	E
6217	5	23.254565	I-20 EB (Basic Analysis)	E
6217	6	21.405307	I-20 EB (Basic Analysis)	E

Existing AM

ID	Run	Density	Name (Type)	Direction
6217	7	23.000514	I-20 EB (Basic Analysis)	E
6217	8	20.654969	I-20 EB (Basic Analysis)	E
6217	9	20.802673	I-20 EB (Basic Analysis)	E
6217	10	19.984392	I-20 EB (Basic Analysis)	E
6220	1	14.369732	I-20 WB (Basic Analysis)	W
6220	2	13.596875	I-20 WB (Basic Analysis)	W
6220	3	13.661453	I-20 WB (Basic Analysis)	W
6220	4	13.628122	I-20 WB (Basic Analysis)	W
6220	5	14.594715	I-20 WB (Basic Analysis)	W
6220	6	13.255234	I-20 WB (Basic Analysis)	W
6220	7	13.049	I-20 WB (Basic Analysis)	W
6220	8	14.263491	I-20 WB (Basic Analysis)	W
6220	9	15.292578	I-20 WB (Basic Analysis)	W
6220	10	12.224063	I-20 WB (Basic Analysis)	W
6223	1	49.990598	I-26 EB (Weaving Analysis)	SE
6223	2	49.370206	I-26 EB (Weaving Analysis)	SE
6223	3	51.531784	I-26 EB (Weaving Analysis)	SE
6223	4	50.878739	I-26 EB (Weaving Analysis)	SE
6223	5	50.940779	I-26 EB (Weaving Analysis)	SE
6223	6	51.437093	I-26 EB (Weaving Analysis)	SE
6223	7	50.882005	I-26 EB (Weaving Analysis)	SE
6223	8	49.72938	I-26 EB (Weaving Analysis)	SE
6223	9	50.519565	I-26 EB (Weaving Analysis)	SE
6223	10	57.892443	I-26 EB (Weaving Analysis)	SE
6227	1	16.789538	I-20 WB (Basic Analysis)	W
6227	2	16.247674	I-20 WB (Basic Analysis)	W
6227	3	16.720774	I-20 WB (Basic Analysis)	W
6227	4	18.195085	I-20 WB (Basic Analysis)	W
6227	5	16.17891	I-20 WB (Basic Analysis)	W
6227	6	17.611962	I-20 WB (Basic Analysis)	W
6227	7	18.272101	I-20 WB (Basic Analysis)	W
6227	8	15.936859	I-20 WB (Basic Analysis)	W
6227	9	18.940492	I-20 WB (Basic Analysis)	W
6227	10	18.544408	I-20 WB (Basic Analysis)	W
6229	1	34.445199	I-20 WB (Merge Analysis)	W
6229	2	36.906366	I-20 WB (Merge Analysis)	W
6229	3	38.026698	I-20 WB (Merge Analysis)	W
6229	4	32.367128	I-20 WB (Merge Analysis)	W
6229	5	40.218361	I-20 WB (Merge Analysis)	W
6229	6	40.405454	I-20 WB (Merge Analysis)	W
6229	7	35.734806	I-20 WB (Merge Analysis)	W
6229	8	36.316131	I-20 WB (Merge Analysis)	W
6229	9	38.449885	I-20 WB (Merge Analysis)	W
6229	10	32.099852	I-20 WB (Merge Analysis)	W
6230	1	34.445199	I-20 WB (Merge+Diverge Analysis)	W
6230	2	36.906366	I-20 WB (Merge+Diverge Analysis)	W
6230	3	38.026698	I-20 WB (Merge+Diverge Analysis)	W
6230	4	32.367128	I-20 WB (Merge+Diverge Analysis)	W
6230	5	40.218361	I-20 WB (Merge+Diverge Analysis)	W
6230	6	40.405454	I-20 WB (Merge+Diverge Analysis)	W
6230	7	35.734806	I-20 WB (Merge+Diverge Analysis)	W
6230	8	36.316131	I-20 WB (Merge+Diverge Analysis)	W
6230	9	38.449885	I-20 WB (Merge+Diverge Analysis)	W
6230	10	32.099852	I-20 WB (Merge+Diverge Analysis)	W
6231	1	34.822371	I-20 WB (Diverge Analysis)	W
6231	2	37.251717	I-20 WB (Diverge Analysis)	W
6231	3	38.411872	I-20 WB (Diverge Analysis)	W
6231	4	32.677019	I-20 WB (Diverge Analysis)	W
6231	5	40.594705	I-20 WB (Diverge Analysis)	W
6231	6	40.862955	I-20 WB (Diverge Analysis)	W
6231	7	36.069194	I-20 WB (Diverge Analysis)	W
6231	8	36.65596	I-20 WB (Diverge Analysis)	W
6231	9	38.809679	I-20 WB (Diverge Analysis)	W
6231	10	32.428927	I-20 WB (Diverge Analysis)	W

Existing AM

ID	Run	Density	Name (Type)	Direction
6234	1	21.032604	I-20 WB (Basic Analysis)	W
6234	2	21.257034	I-20 WB (Basic Analysis)	W
6234	3	21.891889	I-20 WB (Basic Analysis)	W
6234	4	20.411474	I-20 WB (Basic Analysis)	W
6234	5	21.677754	I-20 WB (Basic Analysis)	W
6234	6	23.007863	I-20 WB (Basic Analysis)	W
6234	7	20.873375	I-20 WB (Basic Analysis)	W
6234	8	21.114963	I-20 WB (Basic Analysis)	W
6234	9	21.495877	I-20 WB (Basic Analysis)	W
6234	10	20.265286	I-20 WB (Basic Analysis)	W
6238	1	27.787705	I-20 EB (Basic Analysis)	NE
6238	2	28.91514	I-20 EB (Basic Analysis)	NE
6238	3	28.138124	I-20 EB (Basic Analysis)	NE
6238	4	28.863339	I-20 EB (Basic Analysis)	NE
6238	5	29.258448	I-20 EB (Basic Analysis)	NE
6238	6	28.063977	I-20 EB (Basic Analysis)	NE
6238	7	27.372281	I-20 EB (Basic Analysis)	NE
6238	8	28.037569	I-20 EB (Basic Analysis)	NE
6238	9	27.90959	I-20 EB (Basic Analysis)	NE
6238	10	27.971548	I-20 EB (Basic Analysis)	NE
6241	1	32.65101	I-20 EB (Merge Analysis)	NE
6241	2	32.904922	I-20 EB (Merge Analysis)	NE
6241	3	32.627169	I-20 EB (Merge Analysis)	NE
6241	4	32.715382	I-20 EB (Merge Analysis)	NE
6241	5	34.390251	I-20 EB (Merge Analysis)	NE
6241	6	32.07166	I-20 EB (Merge Analysis)	NE
6241	7	33.11592	I-20 EB (Merge Analysis)	NE
6241	8	31.45774	I-20 EB (Merge Analysis)	NE
6241	9	31.705692	I-20 EB (Merge Analysis)	NE
6241	10	32.758297	I-20 EB (Merge Analysis)	NE
6242	1	32.65101	I-20 EB (Merge Analysis)	NE
6242	2	32.904922	I-20 EB (Merge Analysis)	NE
6242	3	32.627169	I-20 EB (Merge Analysis)	NE
6242	4	32.715382	I-20 EB (Merge Analysis)	NE
6242	5	34.390251	I-20 EB (Merge Analysis)	NE
6242	6	32.07166	I-20 EB (Merge Analysis)	NE
6242	7	33.11592	I-20 EB (Merge Analysis)	NE
6242	8	31.45774	I-20 EB (Merge Analysis)	NE
6242	9	31.705692	I-20 EB (Merge Analysis)	NE
6242	10	32.758297	I-20 EB (Merge Analysis)	NE
6246	1	21.244532	I-20 WB (Merge Analysis)	SW
6246	2	21.024181	I-20 WB (Merge Analysis)	SW
6246	3	21.317983	I-20 WB (Merge Analysis)	SW
6246	4	20.925357	I-20 WB (Merge Analysis)	SW
6246	5	21.67188	I-20 WB (Merge Analysis)	SW
6246	6	21.531656	I-20 WB (Merge Analysis)	SW
6246	7	22.288863	I-20 WB (Merge Analysis)	SW
6246	8	21.439509	I-20 WB (Merge Analysis)	SW
6246	9	21.942979	I-20 WB (Merge Analysis)	SW
6246	10	21.016168	I-20 WB (Merge Analysis)	SW
6247	1	21.244532	I-20 WB (Merge Analysis)	SW
6247	2	21.024181	I-20 WB (Merge Analysis)	SW
6247	3	21.317983	I-20 WB (Merge Analysis)	SW
6247	4	20.925357	I-20 WB (Merge Analysis)	SW
6247	5	21.67188	I-20 WB (Merge Analysis)	SW
6247	6	21.531656	I-20 WB (Merge Analysis)	SW
6247	7	22.288863	I-20 WB (Merge Analysis)	SW
6247	8	21.439509	I-20 WB (Merge Analysis)	SW
6247	9	21.942979	I-20 WB (Merge Analysis)	SW
6247	10	21.016168	I-20 WB (Merge Analysis)	SW
6249	1	20.25564	I-20 WB (Diverge Analysis)	SW
6249	2	19.690484	I-20 WB (Diverge Analysis)	SW
6249	3	18.65404	I-20 WB (Diverge Analysis)	SW
6249	4	19.931018	I-20 WB (Diverge Analysis)	SW

Existing AM

ID	Run	Density	Name (Type)	Direction
6249	5	20.693684	I-20 WB (Diverge Analysis)	SW
6249	6	18.826129	I-20 WB (Diverge Analysis)	SW
6249	7	19.846929	I-20 WB (Diverge Analysis)	SW
6249	8	20.013151	I-20 WB (Diverge Analysis)	SW
6249	9	20.482484	I-20 WB (Diverge Analysis)	SW
6249	10	19.541862	I-20 WB (Diverge Analysis)	SW
6251	1	25.440882	I-20 WB (Basic Analysis)	SW
6251	2	26.111491	I-20 WB (Basic Analysis)	SW
6251	3	25.529055	I-20 WB (Basic Analysis)	SW
6251	4	25.550167	I-20 WB (Basic Analysis)	SW
6251	5	25.76501	I-20 WB (Basic Analysis)	SW
6251	6	25.955015	I-20 WB (Basic Analysis)	SW
6251	7	25.2397	I-20 WB (Basic Analysis)	SW
6251	8	25.935145	I-20 WB (Basic Analysis)	SW
6251	9	26.002206	I-20 WB (Basic Analysis)	SW
6251	10	25.85815	I-20 WB (Basic Analysis)	SW
6254	1	29.566756	I-20 EB (Basic Analysis)	NE
6254	2	30.432791	I-20 EB (Basic Analysis)	NE
6254	3	29.976588	I-20 EB (Basic Analysis)	NE
6254	4	30.224742	I-20 EB (Basic Analysis)	NE
6254	5	31.58082	I-20 EB (Basic Analysis)	NE
6254	6	29.997894	I-20 EB (Basic Analysis)	NE
6254	7	28.785946	I-20 EB (Basic Analysis)	NE
6254	8	29.195778	I-20 EB (Basic Analysis)	NE
6254	9	30.043013	I-20 EB (Basic Analysis)	NE
6254	10	29.677048	I-20 EB (Basic Analysis)	NE
6258	1	26.38816	I-20 EB (Merge Analysis)	E
6258	2	25.944573	I-20 EB (Merge Analysis)	E
6258	3	28.032038	I-20 EB (Merge Analysis)	E
6258	4	26.395987	I-20 EB (Merge Analysis)	E
6258	5	26.896979	I-20 EB (Merge Analysis)	E
6258	6	26.456002	I-20 EB (Merge Analysis)	E
6258	7	25.621016	I-20 EB (Merge Analysis)	E
6258	8	23.708377	I-20 EB (Merge Analysis)	E
6258	9	25.780185	I-20 EB (Merge Analysis)	E
6258	10	27.027446	I-20 EB (Merge Analysis)	E
6259	1	31.090951	I-20 EB (Basic Analysis)	E
6259	2	30.528563	I-20 EB (Basic Analysis)	E
6259	3	31.600141	I-20 EB (Basic Analysis)	E
6259	4	31.945174	I-20 EB (Basic Analysis)	E
6259	5	31.755177	I-20 EB (Basic Analysis)	E
6259	6	31.13807	I-20 EB (Basic Analysis)	E
6259	7	30.286888	I-20 EB (Basic Analysis)	E
6259	8	31.051432	I-20 EB (Basic Analysis)	E
6259	9	32.088051	I-20 EB (Basic Analysis)	E
6259	10	31.259668	I-20 EB (Basic Analysis)	E
8539	1	14.721017	I-20 WB (Basic Analysis)	SW
8539	2	14.566202	I-20 WB (Basic Analysis)	SW
8539	3	14.765412	I-20 WB (Basic Analysis)	SW
8539	4	14.484242	I-20 WB (Basic Analysis)	SW
8539	5	15.970914	I-20 WB (Basic Analysis)	SW
8539	6	14.412526	I-20 WB (Basic Analysis)	SW
8539	7	14.193965	I-20 WB (Basic Analysis)	SW
8539	8	14.352194	I-20 WB (Basic Analysis)	SW
8539	9	14.963483	I-20 WB (Basic Analysis)	SW
8539	10	13.97085	I-20 WB (Basic Analysis)	SW
8542	1	32.344074	I-20 EB (Basic Analysis)	NE
8542	2	33.972009	I-20 EB (Basic Analysis)	NE
8542	3	32.569462	I-20 EB (Basic Analysis)	NE
8542	4	32.995128	I-20 EB (Basic Analysis)	NE
8542	5	34.010869	I-20 EB (Basic Analysis)	NE
8542	6	33.130839	I-20 EB (Basic Analysis)	NE
8542	7	32.191623	I-20 EB (Basic Analysis)	NE
8542	8	31.574646	I-20 EB (Basic Analysis)	NE

Existing AM

ID	Run	Density	Name (Type)	Direction
8542	9	31.376161	I-20 EB (Basic Analysis)	NE
8542	10	31.61231	I-20 EB (Basic Analysis)	NE
8543	1	51.729318	I-20 EB (Diverge Analysis)	NE
8543	2	52.735451	I-20 EB (Diverge Analysis)	NE
8543	3	56.12345	I-20 EB (Diverge Analysis)	NE
8543	4	52.216251	I-20 EB (Diverge Analysis)	NE
8543	5	62.025315	I-20 EB (Diverge Analysis)	NE
8543	6	53.231184	I-20 EB (Diverge Analysis)	NE
8543	7	49.233052	I-20 EB (Diverge Analysis)	NE
8543	8	48.625852	I-20 EB (Diverge Analysis)	NE
8543	9	47.798652	I-20 EB (Diverge Analysis)	NE
8543	10	50.814118	I-20 EB (Diverge Analysis)	NE
8551	1	28.755458	I-26 WB (Diverge Analysis)	NW
8551	2	28.309592	I-26 WB (Diverge Analysis)	NW
8551	3	27.033592	I-26 WB (Diverge Analysis)	NW
8551	4	28.767191	I-26 WB (Diverge Analysis)	NW
8551	5	28.330125	I-26 WB (Diverge Analysis)	NW
8551	6	28.277325	I-26 WB (Diverge Analysis)	NW
8551	7	26.869325	I-26 WB (Diverge Analysis)	NW
8551	8	29.171991	I-26 WB (Diverge Analysis)	NW
8551	9	28.673325	I-26 WB (Diverge Analysis)	NW
8551	10	29.327458	I-26 WB (Diverge Analysis)	NW
8552	1	69.976357	I-26 EB (Basic Analysis)	SE
8552	2	62.573155	I-26 EB (Basic Analysis)	SE
8552	3	71.220901	I-26 EB (Basic Analysis)	SE
8552	4	68.657499	I-26 EB (Basic Analysis)	SE
8552	5	63.51959	I-26 EB (Basic Analysis)	SE
8552	6	68.156094	I-26 EB (Basic Analysis)	SE
8552	7	70.51193	I-26 EB (Basic Analysis)	SE
8552	8	65.459439	I-26 EB (Basic Analysis)	SE
8552	9	72.514134	I-26 EB (Basic Analysis)	SE
8552	10	65.469689	I-26 EB (Basic Analysis)	SE
8553	1	25.451131	I-26 EB (Basic Analysis)	S
8553	2	24.937562	I-26 EB (Basic Analysis)	S
8553	3	26.59277	I-26 EB (Basic Analysis)	S
8553	4	27.491936	I-26 EB (Basic Analysis)	S
8553	5	24.858422	I-26 EB (Basic Analysis)	S
8553	6	24.935878	I-26 EB (Basic Analysis)	S
8553	7	25.422506	I-26 EB (Basic Analysis)	S
8553	8	25.144673	I-26 EB (Basic Analysis)	S
8553	9	33.589094	I-26 EB (Basic Analysis)	S
8553	10	25.013334	I-26 EB (Basic Analysis)	S
8554	1	17.992722	I-26 WB (Basic Analysis)	N
8554	2	17.177558	I-26 WB (Basic Analysis)	N
8554	3	17.345966	I-26 WB (Basic Analysis)	N
8554	4	17.949724	I-26 WB (Basic Analysis)	N
8554	5	16.718917	I-26 WB (Basic Analysis)	N
8554	6	17.258179	I-26 WB (Basic Analysis)	N
8554	7	17.84223	I-26 WB (Basic Analysis)	N
8554	8	18.325954	I-26 WB (Basic Analysis)	N
8554	9	18.472862	I-26 WB (Basic Analysis)	N
8554	10	17.870895	I-26 WB (Basic Analysis)	N
8559	1	15.649329	I-126 NB (Diverge Analysis)	W
8559	2	15.555462	I-126 NB (Diverge Analysis)	W
8559	3	14.951196	I-126 NB (Diverge Analysis)	W
8559	4	16.802128	I-126 NB (Diverge Analysis)	W
8559	5	14.678396	I-126 NB (Diverge Analysis)	W
8559	6	13.707463	I-126 NB (Diverge Analysis)	W
8559	7	14.962929	I-126 NB (Diverge Analysis)	W
8559	8	15.071462	I-126 NB (Diverge Analysis)	W
8559	9	14.569862	I-126 NB (Diverge Analysis)	W
8559	10	17.330128	I-126 NB (Diverge Analysis)	W
8560	1	26.637017	I-126 SB (Basic Analysis)	E
8560	2	26.54838	I-126 SB (Basic Analysis)	E

Existing AM

ID	Run	Density	Name (Type)	Direction
8560	3	26.024503	I-126 SB (Basic Analysis)	E
8560	4	26.324647	I-126 SB (Basic Analysis)	E
8560	5	26.892537	I-126 SB (Basic Analysis)	E
8560	6	25.739641	I-126 SB (Basic Analysis)	E
8560	7	26.865029	I-126 SB (Basic Analysis)	E
8560	8	26.712206	I-126 SB (Basic Analysis)	E
8560	9	25.849674	I-126 SB (Basic Analysis)	E
8560	10	27.733674	I-126 SB (Basic Analysis)	E
8658	1	29.233434	I-20 WB (Basic Analysis)	SW
8658	2	29.502792	I-20 WB (Basic Analysis)	SW
8658	3	29.517885	I-20 WB (Basic Analysis)	SW
8658	4	28.912701	I-20 WB (Basic Analysis)	SW
8658	5	29.658369	I-20 WB (Basic Analysis)	SW
8658	6	29.705391	I-20 WB (Basic Analysis)	SW
8658	7	29.60293	I-20 WB (Basic Analysis)	SW
8658	8	29.097304	I-20 WB (Basic Analysis)	SW
8658	9	29.6247	I-20 WB (Basic Analysis)	SW
8658	10	28.624477	I-20 WB (Basic Analysis)	SW
8659	1	35.261576	I-20 EB (Basic Analysis)	NE
8659	2	35.664763	I-20 EB (Basic Analysis)	NE
8659	3	35.352522	I-20 EB (Basic Analysis)	NE
8659	4	36.002641	I-20 EB (Basic Analysis)	NE
8659	5	36.127051	I-20 EB (Basic Analysis)	NE
8659	6	35.73304	I-20 EB (Basic Analysis)	NE
8659	7	35.009517	I-20 EB (Basic Analysis)	NE
8659	8	35.16955	I-20 EB (Basic Analysis)	NE
8659	9	35.292341	I-20 EB (Basic Analysis)	NE
8659	10	35.502301	I-20 EB (Basic Analysis)	NE
8763	1	50.28308	I-26 EB (Basic Analysis)	SE
8763	2	50.020927	I-26 EB (Basic Analysis)	SE
8763	3	49.949312	I-26 EB (Basic Analysis)	SE
8763	4	52.730567	I-26 EB (Basic Analysis)	SE
8763	5	51.27961	I-26 EB (Basic Analysis)	SE
8763	6	48.492061	I-26 EB (Basic Analysis)	SE
8763	7	50.893324	I-26 EB (Basic Analysis)	SE
8763	8	49.071055	I-26 EB (Basic Analysis)	SE
8763	9	47.405688	I-26 EB (Basic Analysis)	SE
8763	10	50.279174	I-26 EB (Basic Analysis)	SE
8764	1	15.367391	I-20 WB (Basic Analysis)	S
8764	2	15.657885	I-20 WB (Basic Analysis)	S
8764	3	15.07052	I-20 WB (Basic Analysis)	S
8764	4	15.575541	I-20 WB (Basic Analysis)	S
8764	5	16.153315	I-20 WB (Basic Analysis)	S
8764	6	15.595604	I-20 WB (Basic Analysis)	S
8764	7	15.212511	I-20 WB (Basic Analysis)	S
8764	8	15.53972	I-20 WB (Basic Analysis)	S
8764	9	15.48028	I-20 WB (Basic Analysis)	S
8764	10	15.540299	I-20 WB (Basic Analysis)	S
8765	1	43.533556	I-20 EB (Basic Analysis)	NE
8765	2	43.678865	I-20 EB (Basic Analysis)	NE
8765	3	43.307263	I-20 EB (Basic Analysis)	NE
8765	4	43.59055	I-20 EB (Basic Analysis)	NE
8765	5	43.666997	I-20 EB (Basic Analysis)	NE
8765	6	44.127079	I-20 EB (Basic Analysis)	NE
8765	7	43.881854	I-20 EB (Basic Analysis)	NE
8765	8	43.895512	I-20 EB (Basic Analysis)	NE
8765	9	43.292905	I-20 EB (Basic Analysis)	NE
8765	10	43.405572	I-20 EB (Basic Analysis)	NE
8770	1	30.227991	I-20 WB (Diverge Analysis)	SW
8770	2	29.435991	I-20 WB (Diverge Analysis)	SW
8770	3	29.201324	I-20 WB (Diverge Analysis)	SW
8770	4	30.905591	I-20 WB (Diverge Analysis)	SW
8770	5	31.281057	I-20 WB (Diverge Analysis)	SW
8770	6	30.629857	I-20 WB (Diverge Analysis)	SW

Existing AM

ID	Run	Density	Name (Type)	Direction
8770	7	30.902658	I-20 WB (Diverge Analysis)	SW
8770	8	31.30159	I-20 WB (Diverge Analysis)	SW
8770	9	29.925858	I-20 WB (Diverge Analysis)	SW
8770	10	28.350658	I-20 WB (Diverge Analysis)	SW
8773	1	21.661332	I-26 WB (Basic Analysis)	N
8773	2	20.121671	I-26 WB (Basic Analysis)	N
8773	3	20.750795	I-26 WB (Basic Analysis)	N
8773	4	22.31403	I-26 WB (Basic Analysis)	N
8773	5	20.964433	I-26 WB (Basic Analysis)	N
8773	6	20.464964	I-26 WB (Basic Analysis)	N
8773	7	20.764056	I-26 WB (Basic Analysis)	N
8773	8	20.80531	I-26 WB (Basic Analysis)	N
8773	9	22.094499	I-26 WB (Basic Analysis)	N
8773	10	20.932019	I-26 WB (Basic Analysis)	N
8774	1	34.847973	I-20 EB (Diverge Analysis)	NE
8774	2	34.581586	I-20 EB (Diverge Analysis)	NE
8774	3	36.125484	I-20 EB (Diverge Analysis)	NE
8774	4	35.392204	I-20 EB (Diverge Analysis)	NE
8774	5	36.515039	I-20 EB (Diverge Analysis)	NE
8774	6	35.965079	I-20 EB (Diverge Analysis)	NE
8774	7	35.899198	I-20 EB (Diverge Analysis)	NE
8774	8	33.198094	I-20 EB (Diverge Analysis)	NE
8774	9	34.33525	I-20 EB (Diverge Analysis)	NE
8774	10	34.47274	I-20 EB (Diverge Analysis)	NE
8783	1	23.598368	I-26 WB (Basic Analysis)	NW
8783	2	23.700192	I-26 WB (Basic Analysis)	NW
8783	3	22.94908	I-26 WB (Basic Analysis)	NW
8783	4	24.087771	I-26 WB (Basic Analysis)	NW
8783	5	23.261051	I-26 WB (Basic Analysis)	NW
8783	6	23.895173	I-26 WB (Basic Analysis)	NW
8783	7	22.994576	I-26 WB (Basic Analysis)	NW
8783	8	22.733735	I-26 WB (Basic Analysis)	NW
8783	9	23.548973	I-26 WB (Basic Analysis)	NW
8783	10	23.633681	I-26 WB (Basic Analysis)	NW
8784	1	58.433725	I-26 EB (Basic Analysis)	SE
8784	2	54.115272	I-26 EB (Basic Analysis)	SE
8784	3	58.067572	I-26 EB (Basic Analysis)	SE
8784	4	56.549113	I-26 EB (Basic Analysis)	SE
8784	5	61.653719	I-26 EB (Basic Analysis)	SE
8784	6	54.707579	I-26 EB (Basic Analysis)	SE
8784	7	52.359892	I-26 EB (Basic Analysis)	SE
8784	8	51.002971	I-26 EB (Basic Analysis)	SE
8784	9	45.941443	I-26 EB (Basic Analysis)	SE
8784	10	57.28142	I-26 EB (Basic Analysis)	SE
8817	1	25.310136	I-26 WB (Basic Analysis)	NW
8817	2	25.690908	I-26 WB (Basic Analysis)	NW
8817	3	25.626912	I-26 WB (Basic Analysis)	NW
8817	4	24.452599	I-26 WB (Basic Analysis)	NW
8817	5	26.46845	I-26 WB (Basic Analysis)	NW
8817	6	26.990012	I-26 WB (Basic Analysis)	NW
8817	7	24.938963	I-26 WB (Basic Analysis)	NW
8817	8	27.297189	I-26 WB (Basic Analysis)	NW
8817	9	26.593241	I-26 WB (Basic Analysis)	NW
8817	10	27.901945	I-26 WB (Basic Analysis)	NW

Existing PM

ID	Run	Density	Name (Type)	Direction
2466	1	24.278801	I-20 EB (Weaving Analysis)	E
2466	2	23.87083	I-20 EB (Weaving Analysis)	E
2466	3	24.09748	I-20 EB (Weaving Analysis)	E
2466	4	26.771956	I-20 EB (Weaving Analysis)	E
2466	5	24.42839	I-20 EB (Weaving Analysis)	E
2466	6	23.331402	I-20 EB (Weaving Analysis)	E
2466	7	22.646917	I-20 EB (Weaving Analysis)	E
2466	8	23.703109	I-20 EB (Weaving Analysis)	E
2466	9	23.766571	I-20 EB (Weaving Analysis)	E
2466	10	21.821909	I-20 EB (Weaving Analysis)	E
2467	1	27.710497	I-20 WB (Weaving Analysis)	W
2467	2	26.007587	I-20 WB (Weaving Analysis)	W
2467	3	25.461782	I-20 WB (Weaving Analysis)	W
2467	4	27.666833	I-20 WB (Weaving Analysis)	W
2467	5	27.039158	I-20 WB (Weaving Analysis)	W
2467	6	27.683207	I-20 WB (Weaving Analysis)	W
2467	7	23.305854	I-20 WB (Weaving Analysis)	W
2467	8	26.979119	I-20 WB (Weaving Analysis)	W
2467	9	25.942091	I-20 WB (Weaving Analysis)	W
2467	10	23.420473	I-20 WB (Weaving Analysis)	W
2806	1	21.061298	I-20 EB (Basic Analysis)	NE
2806	2	20.293476	I-20 EB (Basic Analysis)	NE
2806	3	21.593464	I-20 EB (Basic Analysis)	NE
2806	4	20.873201	I-20 EB (Basic Analysis)	NE
2806	5	21.235293	I-20 EB (Basic Analysis)	NE
2806	6	21.552997	I-20 EB (Basic Analysis)	NE
2806	7	20.866546	I-20 EB (Basic Analysis)	NE
2806	8	20.96225	I-20 EB (Basic Analysis)	NE
2806	9	20.416161	I-20 EB (Basic Analysis)	NE
2806	10	20.60993	I-20 EB (Basic Analysis)	NE
2807	1	21.061298	I-20 EB (Basic Analysis)	NE
2807	2	20.293476	I-20 EB (Basic Analysis)	NE
2807	3	21.593464	I-20 EB (Basic Analysis)	NE
2807	4	20.873201	I-20 EB (Basic Analysis)	NE
2807	5	21.235293	I-20 EB (Basic Analysis)	NE
2807	6	21.552997	I-20 EB (Basic Analysis)	NE
2807	7	20.866546	I-20 EB (Basic Analysis)	NE
2807	8	20.96225	I-20 EB (Basic Analysis)	NE
2807	9	20.416161	I-20 EB (Basic Analysis)	NE
2807	10	20.60993	I-20 EB (Basic Analysis)	NE
2808	1	19.889424	I-20 EB (Diverge Analysis)	NE
2808	2	19.250179	I-20 EB (Diverge Analysis)	NE
2808	3	19.155775	I-20 EB (Diverge Analysis)	NE
2808	4	18.574521	I-20 EB (Diverge Analysis)	NE
2808	5	20.418082	I-20 EB (Diverge Analysis)	NE
2808	6	20.668925	I-20 EB (Diverge Analysis)	NE
2808	7	19.144986	I-20 EB (Diverge Analysis)	NE
2808	8	19.256922	I-20 EB (Diverge Analysis)	NE
2808	9	19.345931	I-20 EB (Diverge Analysis)	NE
2808	10	17.831432	I-20 EB (Diverge Analysis)	NE
2813	1	30.078896	I-20 WB (Merge Analysis)	S
2813	2	27.118271	I-20 WB (Merge Analysis)	S
2813	3	28.001221	I-20 WB (Merge Analysis)	S
2813	4	27.761777	I-20 WB (Merge Analysis)	S
2813	5	28.919089	I-20 WB (Merge Analysis)	S
2813	6	29.627444	I-20 WB (Merge Analysis)	S
2813	7	28.38907	I-20 WB (Merge Analysis)	S
2813	8	30.142498	I-20 WB (Merge Analysis)	S
2813	9	30.754826	I-20 WB (Merge Analysis)	S
2813	10	29.325645	I-20 WB (Merge Analysis)	S
2814	1	34.343185	I-20 WB (Basic Analysis)	S
2814	2	31.908932	I-20 WB (Basic Analysis)	S
2814	3	32.83189	I-20 WB (Basic Analysis)	S
2814	4	31.645274	I-20 WB (Basic Analysis)	S

Existing PM

ID	Run	Density	Name (Type)	Direction
2814	5	33.31308	I-20 WB (Basic Analysis)	S
2814	6	34.619752	I-20 WB (Basic Analysis)	S
2814	7	32.752166	I-20 WB (Basic Analysis)	S
2814	8	34.492634	I-20 WB (Basic Analysis)	S
2814	9	34.227621	I-20 WB (Basic Analysis)	S
2814	10	33.223562	I-20 WB (Basic Analysis)	S
2815	1	34.343185	I-20 WB (Basic Analysis)	S
2815	2	31.908932	I-20 WB (Basic Analysis)	S
2815	3	32.83189	I-20 WB (Basic Analysis)	S
2815	4	31.645274	I-20 WB (Basic Analysis)	S
2815	5	33.31308	I-20 WB (Basic Analysis)	S
2815	6	34.619752	I-20 WB (Basic Analysis)	S
2815	7	32.752166	I-20 WB (Basic Analysis)	S
2815	8	34.492634	I-20 WB (Basic Analysis)	S
2815	9	34.227621	I-20 WB (Basic Analysis)	S
2815	10	33.223562	I-20 WB (Basic Analysis)	S
2822	1	14.127896	I-20 WB (Merge Analysis)	SW
2822	2	14.098621	I-20 WB (Merge Analysis)	SW
2822	3	13.935165	I-20 WB (Merge Analysis)	SW
2822	4	13.630212	I-20 WB (Merge Analysis)	SW
2822	5	13.056899	I-20 WB (Merge Analysis)	SW
2822	6	13.942484	I-20 WB (Merge Analysis)	SW
2822	7	13.430162	I-20 WB (Merge Analysis)	SW
2822	8	14.262076	I-20 WB (Merge Analysis)	SW
2822	9	13.920528	I-20 WB (Merge Analysis)	SW
2822	10	14.420652	I-20 WB (Merge Analysis)	SW
2823	1	986.189563	I-20 WB (Basic Analysis)	SW
2823	2	427.969055	I-20 WB (Basic Analysis)	SW
2823	3	427.969051	I-20 WB (Basic Analysis)	SW
2823	4	497.746615	I-20 WB (Basic Analysis)	SW
2823	5	800.11606	I-20 WB (Basic Analysis)	SW
2823	6	679.168282	I-20 WB (Basic Analysis)	SW
2823	7	325.62863	I-20 WB (Basic Analysis)	SW
2823	8	451.228243	I-20 WB (Basic Analysis)	SW
2823	9	441.924569	I-20 WB (Basic Analysis)	SW
2823	10	953.626701	I-20 WB (Basic Analysis)	SW
2826	1	14.303767	I-20 EB (Basic Analysis)	NE
2826	2	13.240483	I-20 EB (Basic Analysis)	NE
2826	3	14.164365	I-20 EB (Basic Analysis)	NE
2826	4	12.967145	I-20 EB (Basic Analysis)	NE
2826	5	14.844976	I-20 EB (Basic Analysis)	NE
2826	6	13.317017	I-20 EB (Basic Analysis)	NE
2826	7	11.720725	I-20 EB (Basic Analysis)	NE
2826	8	14.180765	I-20 EB (Basic Analysis)	NE
2826	9	13.207682	I-20 EB (Basic Analysis)	NE
2826	10	12.294734	I-20 EB (Basic Analysis)	NE
2829	1	16.272278	I-20 EB (Merge Analysis)	NE
2829	2	13.988754	I-20 EB (Merge Analysis)	NE
2829	3	16.376413	I-20 EB (Merge Analysis)	NE
2829	4	15.81359	I-20 EB (Merge Analysis)	NE
2829	5	15.481351	I-20 EB (Merge Analysis)	NE
2829	6	16.656585	I-20 EB (Merge Analysis)	NE
2829	7	15.337546	I-20 EB (Merge Analysis)	NE
2829	8	14.630918	I-20 EB (Merge Analysis)	NE
2829	9	15.317711	I-20 EB (Merge Analysis)	NE
2829	10	15.059853	I-20 EB (Merge Analysis)	NE
2830	1	18.065514	I-20 EB (Basic Analysis)	NE
2830	2	17.392511	I-20 EB (Basic Analysis)	NE
2830	3	17.392511	I-20 EB (Basic Analysis)	NE
2830	4	15.624228	I-20 EB (Basic Analysis)	NE
2830	5	18.355829	I-20 EB (Basic Analysis)	NE
2830	6	17.247353	I-20 EB (Basic Analysis)	NE
2830	7	20.625564	I-20 EB (Basic Analysis)	NE
2830	8	18.435006	I-20 EB (Basic Analysis)	NE

ID	Run	Density	Name (Type)	Direction
2830	9	17.577256	I-20 EB (Basic Analysis)	NE
2830	10	17.748806	I-20 EB (Basic Analysis)	NE
2831	1	19.428534	I-20 WB (Basic Analysis)	SW
2831	2	18.041102	I-20 WB (Basic Analysis)	SW
2831	3	18.520763	I-20 WB (Basic Analysis)	SW
2831	4	18.103861	I-20 WB (Basic Analysis)	SW
2831	5	18.641799	I-20 WB (Basic Analysis)	SW
2831	6	20.475272	I-20 WB (Basic Analysis)	SW
2831	7	18.785249	I-20 WB (Basic Analysis)	SW
2831	8	21.434595	I-20 WB (Basic Analysis)	SW
2831	9	19.446465	I-20 WB (Basic Analysis)	SW
2831	10	17.796788	I-20 WB (Basic Analysis)	SW
2837	1	20.632618	I-20 WB (Merge Analysis)	SW
2837	2	19.986754	I-20 WB (Merge Analysis)	SW
2837	3	19.793996	I-20 WB (Merge Analysis)	SW
2837	4	20.129445	I-20 WB (Merge Analysis)	SW
2837	5	20.427343	I-20 WB (Merge Analysis)	SW
2837	6	19.571198	I-20 WB (Merge Analysis)	SW
2837	7	19.929177	I-20 WB (Merge Analysis)	SW
2837	8	20.837893	I-20 WB (Merge Analysis)	SW
2837	9	20.562524	I-20 WB (Merge Analysis)	SW
2837	10	21.023141	I-20 WB (Merge Analysis)	SW
2838	1	33.677293	I-20 WB (Basic Analysis)	SW
2838	2	29.845957	I-20 WB (Basic Analysis)	SW
2838	3	33.877717	I-20 WB (Basic Analysis)	SW
2838	4	33.306813	I-20 WB (Basic Analysis)	SW
2838	5	32.333036	I-20 WB (Basic Analysis)	SW
2838	6	32.055681	I-20 WB (Basic Analysis)	SW
2838	7	30.342968	I-20 WB (Basic Analysis)	SW
2838	8	64.45755	I-20 WB (Basic Analysis)	SW
2838	9	31.556646	I-20 WB (Basic Analysis)	SW
2838	10	32.598243	I-20 WB (Basic Analysis)	SW
2839	1	34.282547	I-20 WB (Diverge Analysis)	SW
2839	2	35.472703	I-20 WB (Diverge Analysis)	SW
2839	3	49.020815	I-20 WB (Diverge Analysis)	SW
2839	4	52.523203	I-20 WB (Diverge Analysis)	SW
2839	5	35.039003	I-20 WB (Diverge Analysis)	SW
2839	6	41.758846	I-20 WB (Diverge Analysis)	SW
2839	7	31.972838	I-20 WB (Diverge Analysis)	SW
2839	8	81.268499	I-20 WB (Diverge Analysis)	SW
2839	9	39.436529	I-20 WB (Diverge Analysis)	SW
2839	10	33.626953	I-20 WB (Diverge Analysis)	SW
2840	1	34.282547	I-20 WB (Diverge Analysis)	SW
2840	2	35.472703	I-20 WB (Diverge Analysis)	SW
2840	3	49.020815	I-20 WB (Diverge Analysis)	SW
2840	4	52.523203	I-20 WB (Diverge Analysis)	SW
2840	5	35.039003	I-20 WB (Diverge Analysis)	SW
2840	6	41.758846	I-20 WB (Diverge Analysis)	SW
2840	7	31.972838	I-20 WB (Diverge Analysis)	SW
2840	8	81.268499	I-20 WB (Diverge Analysis)	SW
2840	9	39.436529	I-20 WB (Diverge Analysis)	SW
2840	10	33.626953	I-20 WB (Diverge Analysis)	SW
2843	1	16.307252	I-20 EB (Merge Analysis)	NE
2843	2	16.491295	I-20 EB (Merge Analysis)	NE
2843	3	16.139136	I-20 EB (Merge Analysis)	NE
2843	4	16.215231	I-20 EB (Merge Analysis)	NE
2843	5	16.985025	I-20 EB (Merge Analysis)	NE
2843	6	16.303713	I-20 EB (Merge Analysis)	NE
2843	7	16.484216	I-20 EB (Merge Analysis)	NE
2843	8	17.101822	I-20 EB (Merge Analysis)	NE
2843	9	16.707191	I-20 EB (Merge Analysis)	NE
2843	10	15.314483	I-20 EB (Merge Analysis)	NE
2844	1	16.307252	I-20 EB (Merge Analysis)	NE
2844	2	16.491295	I-20 EB (Merge Analysis)	NE

Existing PM

ID	Run	Density	Name (Type)	Direction
2844	3	16.139136	I-20 EB (Merge Analysis)	NE
2844	4	16.215231	I-20 EB (Merge Analysis)	NE
2844	5	16.985025	I-20 EB (Merge Analysis)	NE
2844	6	16.303713	I-20 EB (Merge Analysis)	NE
2844	7	16.484216	I-20 EB (Merge Analysis)	NE
2844	8	17.101822	I-20 EB (Merge Analysis)	NE
2844	9	16.707191	I-20 EB (Merge Analysis)	NE
2844	10	15.314483	I-20 EB (Merge Analysis)	NE
2848	1	18.705051	I-20 EB (Basic Analysis)	NE
2848	2	15.201373	I-20 EB (Basic Analysis)	NE
2848	3	16.49847	I-20 EB (Basic Analysis)	NE
2848	4	15.915967	I-20 EB (Basic Analysis)	NE
2848	5	16.39886	I-20 EB (Basic Analysis)	NE
2848	6	15.591151	I-20 EB (Basic Analysis)	NE
2848	7	15.725409	I-20 EB (Basic Analysis)	NE
2848	8	16.704186	I-20 EB (Basic Analysis)	NE
2848	9	15.775214	I-20 EB (Basic Analysis)	NE
2848	10	14.735803	I-20 EB (Basic Analysis)	NE
2852	1	24.277369	I-20 WB (Basic Analysis)	SW
2852	2	21.165495	I-20 WB (Basic Analysis)	SW
2852	3	22.001104	I-20 WB (Basic Analysis)	SW
2852	4	22.868851	I-20 WB (Basic Analysis)	SW
2852	5	22.984831	I-20 WB (Basic Analysis)	SW
2852	6	23.828823	I-20 WB (Basic Analysis)	SW
2852	7	20.894411	I-20 WB (Basic Analysis)	SW
2852	8	22.608946	I-20 WB (Basic Analysis)	SW
2852	9	22.794792	I-20 WB (Basic Analysis)	SW
2852	10	23.331371	I-20 WB (Basic Analysis)	SW
2856	1	15.134385	I-20 EB (Basic Analysis)	NE
2856	2	13.984572	I-20 EB (Basic Analysis)	NE
2856	3	14.27347	I-20 EB (Basic Analysis)	NE
2856	4	14.032722	I-20 EB (Basic Analysis)	NE
2856	5	13.657155	I-20 EB (Basic Analysis)	NE
2856	6	14.74341	I-20 EB (Basic Analysis)	NE
2856	7	14.192579	I-20 EB (Basic Analysis)	NE
2856	8	14.071242	I-20 EB (Basic Analysis)	NE
2856	9	14.142503	I-20 EB (Basic Analysis)	NE
2856	10	13.379813	I-20 EB (Basic Analysis)	NE
2859	1	67.451997	I-20 WB (Weaving Analysis)	SW
2859	2	60.752294	I-20 WB (Weaving Analysis)	SW
2859	3	38.264063	I-20 WB (Weaving Analysis)	SW
2859	4	50.931283	I-20 WB (Weaving Analysis)	SW
2859	5	53.297129	I-20 WB (Weaving Analysis)	SW
2859	6	49.295506	I-20 WB (Weaving Analysis)	SW
2859	7	39.77922	I-20 WB (Weaving Analysis)	SW
2859	8	54.033546	I-20 WB (Weaving Analysis)	SW
2859	9	51.020161	I-20 WB (Weaving Analysis)	SW
2859	10	50.042504	I-20 WB (Weaving Analysis)	SW
2863	1	13.288313	I-20 EB (Merge Analysis)	E
2863	2	12.701185	I-20 EB (Merge Analysis)	E
2863	3	13.737751	I-20 EB (Merge Analysis)	E
2863	4	13.929997	I-20 EB (Merge Analysis)	E
2863	5	13.496146	I-20 EB (Merge Analysis)	E
2863	6	14.143025	I-20 EB (Merge Analysis)	E
2863	7	14.75873	I-20 EB (Merge Analysis)	E
2863	8	13.672803	I-20 EB (Merge Analysis)	E
2863	9	12.745349	I-20 EB (Merge Analysis)	E
2863	10	12.823287	I-20 EB (Merge Analysis)	E
4563	1	8.955464	I-126 SB (Merge Analysis)	E
4563	2	9.905864	I-126 SB (Merge Analysis)	E
4563	3	10.480797	I-126 SB (Merge Analysis)	E
4563	4	8.621064	I-126 SB (Merge Analysis)	E
4563	5	9.803197	I-126 SB (Merge Analysis)	E
4563	6	10.46613	I-126 SB (Merge Analysis)	E

Existing PM

ID	Run	Density	Name (Type)	Direction
4563	7	10.020264	I-126 SB (Merge Analysis)	E
4563	8	9.63013	I-126 SB (Merge Analysis)	E
4563	9	10.647997	I-126 SB (Merge Analysis)	E
4563	10	9.627197	I-126 SB (Merge Analysis)	E
4566	1	25.391564	I-126 NB (Basic Analysis)	W
4566	2	26.1608	I-126 NB (Basic Analysis)	W
4566	3	25.820983	I-126 NB (Basic Analysis)	W
4566	4	26.626568	I-126 NB (Basic Analysis)	W
4566	5	26.253785	I-126 NB (Basic Analysis)	W
4566	6	24.875922	I-126 NB (Basic Analysis)	W
4566	7	26.272382	I-126 NB (Basic Analysis)	W
4566	8	25.281673	I-126 NB (Basic Analysis)	W
4566	9	25.110919	I-126 NB (Basic Analysis)	W
4566	10	25.722927	I-126 NB (Basic Analysis)	W
4570	1	22.632992	I-126 NB (Basic Analysis)	NW
4570	2	25.512017	I-126 NB (Basic Analysis)	NW
4570	3	24.490773	I-126 NB (Basic Analysis)	NW
4570	4	24.135662	I-126 NB (Basic Analysis)	NW
4570	5	24.347775	I-126 NB (Basic Analysis)	NW
4570	6	22.849872	I-126 NB (Basic Analysis)	NW
4570	7	24.306068	I-126 NB (Basic Analysis)	NW
4570	8	23.077477	I-126 NB (Basic Analysis)	NW
4570	9	23.91044	I-126 NB (Basic Analysis)	NW
4570	10	25.931477	I-126 NB (Basic Analysis)	NW
4573	1	10.179073	I-126 SB (Basic Analysis)	E
4573	2	12.466417	I-126 SB (Basic Analysis)	E
4573	3	11.44982	I-126 SB (Basic Analysis)	E
4573	4	9.843701	I-126 SB (Basic Analysis)	E
4573	5	11.669908	I-126 SB (Basic Analysis)	E
4573	6	11.059426	I-126 SB (Basic Analysis)	E
4573	7	12.458557	I-126 SB (Basic Analysis)	E
4573	8	11.145889	I-126 SB (Basic Analysis)	E
4573	9	9.935404	I-126 SB (Basic Analysis)	E
4573	10	10.268157	I-126 SB (Basic Analysis)	E
4578	1	13.77575	I-126 SB (Basic Analysis)	E
4578	2	13.364193	I-126 SB (Basic Analysis)	E
4578	3	14.174631	I-126 SB (Basic Analysis)	E
4578	4	13.786737	I-126 SB (Basic Analysis)	E
4578	5	14.103644	I-126 SB (Basic Analysis)	E
4578	6	13.681946	I-126 SB (Basic Analysis)	E
4578	7	13.452082	I-126 SB (Basic Analysis)	E
4578	8	13.097146	I-126 SB (Basic Analysis)	E
4578	9	13.312643	I-126 SB (Basic Analysis)	E
4578	10	13.759694	I-126 SB (Basic Analysis)	E
4579	1	10.718814	I-126 SB (Diverge Analysis)	E
4579	2	12.136134	I-126 SB (Diverge Analysis)	E
4579	3	11.029996	I-126 SB (Diverge Analysis)	E
4579	4	11.725582	I-126 SB (Diverge Analysis)	E
4579	5	10.632519	I-126 SB (Diverge Analysis)	E
4579	6	11.634057	I-126 SB (Diverge Analysis)	E
4579	7	10.263807	I-126 SB (Diverge Analysis)	E
4579	8	11.369944	I-126 SB (Diverge Analysis)	E
4579	9	11.474544	I-126 SB (Diverge Analysis)	E
4579	10	12.222428	I-126 SB (Diverge Analysis)	E
4586	1	21.72951	I-126 NB (Merge Analysis)	NW
4586	2	29.349044	I-126 NB (Merge Analysis)	NW
4586	3	24.926888	I-126 NB (Merge Analysis)	NW
4586	4	25.353794	I-126 NB (Merge Analysis)	NW
4586	5	25.91466	I-126 NB (Merge Analysis)	NW
4586	6	21.436564	I-126 NB (Merge Analysis)	NW
4586	7	25.029934	I-126 NB (Merge Analysis)	NW
4586	8	23.027893	I-126 NB (Merge Analysis)	NW
4586	9	24.535312	I-126 NB (Merge Analysis)	NW
4586	10	32.493427	I-126 NB (Merge Analysis)	NW

Existing PM

ID	Run	Density	Name (Type)	Direction
4587	1	37.191121	I-126 NB (Basic Analysis)	NW
4587	2	59.924429	I-126 NB (Basic Analysis)	NW
4587	3	52.313592	I-126 NB (Basic Analysis)	NW
4587	4	51.974319	I-126 NB (Basic Analysis)	NW
4587	5	54.686523	I-126 NB (Basic Analysis)	NW
4587	6	27.457345	I-126 NB (Basic Analysis)	NW
4587	7	50.069626	I-126 NB (Basic Analysis)	NW
4587	8	36.966923	I-126 NB (Basic Analysis)	NW
4587	9	49.49425	I-126 NB (Basic Analysis)	NW
4587	10	65.614701	I-126 NB (Basic Analysis)	NW
4588	1	24.498279	I-126 NB (Diverge Analysis)	NW
4588	2	34.314371	I-126 NB (Diverge Analysis)	NW
4588	3	30.486686	I-126 NB (Diverge Analysis)	NW
4588	4	30.168974	I-126 NB (Diverge Analysis)	NW
4588	5	30.002552	I-126 NB (Diverge Analysis)	NW
4588	6	22.634638	I-126 NB (Diverge Analysis)	NW
4588	7	29.550052	I-126 NB (Diverge Analysis)	NW
4588	8	27.030355	I-126 NB (Diverge Analysis)	NW
4588	9	30.576485	I-126 NB (Diverge Analysis)	NW
4588	10	36.490223	I-126 NB (Diverge Analysis)	NW
4589	1	24.498279	I-126 NB (Diverge Analysis)	NW
4589	2	34.314371	I-126 NB (Diverge Analysis)	NW
4589	3	30.486686	I-126 NB (Diverge Analysis)	NW
4589	4	30.168974	I-126 NB (Diverge Analysis)	NW
4589	5	30.002552	I-126 NB (Diverge Analysis)	NW
4589	6	22.634638	I-126 NB (Diverge Analysis)	NW
4589	7	29.550052	I-126 NB (Diverge Analysis)	NW
4589	8	27.030355	I-126 NB (Diverge Analysis)	NW
4589	9	30.576485	I-126 NB (Diverge Analysis)	NW
4589	10	36.490223	I-126 NB (Diverge Analysis)	NW
4593	1	12.899649	I-126 SB (Merge Analysis)	SE
4593	2	13.569289	I-126 SB (Merge Analysis)	SE
4593	3	14.423209	I-126 SB (Merge Analysis)	SE
4593	4	12.040538	I-126 SB (Merge Analysis)	SE
4593	5	13.862581	I-126 SB (Merge Analysis)	SE
4593	6	12.492155	I-126 SB (Merge Analysis)	SE
4593	7	13.361648	I-126 SB (Merge Analysis)	SE
4593	8	13.224087	I-126 SB (Merge Analysis)	SE
4593	9	13.457682	I-126 SB (Merge Analysis)	SE
4593	10	13.590053	I-126 SB (Merge Analysis)	SE
4594	1	16.03492	I-126 SB (Basic Analysis)	SE
4594	2	15.557133	I-126 SB (Basic Analysis)	SE
4594	3	15.263232	I-126 SB (Basic Analysis)	SE
4594	4	15.288378	I-126 SB (Basic Analysis)	SE
4594	5	15.381107	I-126 SB (Basic Analysis)	SE
4594	6	15.550061	I-126 SB (Basic Analysis)	SE
4594	7	15.538273	I-126 SB (Basic Analysis)	SE
4594	8	14.418461	I-126 SB (Basic Analysis)	SE
4594	9	15.337886	I-126 SB (Basic Analysis)	SE
4594	10	15.002335	I-126 SB (Basic Analysis)	SE
4599	1	57.218862	I-126 NB (Basic Analysis)	NW
4599	2	71.618537	I-126 NB (Basic Analysis)	NW
4599	3	63.653318	I-126 NB (Basic Analysis)	NW
4599	4	61.984534	I-126 NB (Basic Analysis)	NW
4599	5	63.18793	I-126 NB (Basic Analysis)	NW
4599	6	51.842938	I-126 NB (Basic Analysis)	NW
4599	7	64.565845	I-126 NB (Basic Analysis)	NW
4599	8	62.971204	I-126 NB (Basic Analysis)	NW
4599	9	63.767384	I-126 NB (Basic Analysis)	NW
4599	10	74.740521	I-126 NB (Basic Analysis)	NW
4601	1	70.130305	I-126 NB (Basic Analysis)	NW
4601	2	81.990589	I-126 NB (Basic Analysis)	NW
4601	3	74.596252	I-126 NB (Basic Analysis)	NW
4601	4	74.487683	I-126 NB (Basic Analysis)	NW

Existing PM

ID	Run	Density	Name (Type)	Direction
4601	5	73.55899	I-126 NB (Basic Analysis)	NW
4601	6	68.359479	I-126 NB (Basic Analysis)	NW
4601	7	73.911101	I-126 NB (Basic Analysis)	NW
4601	8	77.678692	I-126 NB (Basic Analysis)	NW
4601	9	75.637914	I-126 NB (Basic Analysis)	NW
4601	10	84.192752	I-126 NB (Basic Analysis)	NW
4602	1	11.944374	WB EXPRESSWAY TO I-26 WB (Basic Anal	NW
4602	2	10.644394	WB EXPRESSWAY TO I-26 WB (Basic Anal	NW
4602	3	13.488905	WB EXPRESSWAY TO I-26 WB (Basic Anal	NW
4602	4	60.468395	WB EXPRESSWAY TO I-26 WB (Basic Anal	NW
4602	5	14.13246	WB EXPRESSWAY TO I-26 WB (Basic Anal	NW
4602	6	13.411679	WB EXPRESSWAY TO I-26 WB (Basic Anal	NW
4602	7	11.339433	WB EXPRESSWAY TO I-26 WB (Basic Anal	NW
4602	8	12.060214	WB EXPRESSWAY TO I-26 WB (Basic Anal	NW
4602	9	14.685917	WB EXPRESSWAY TO I-26 WB (Basic Anal	NW
4602	10	13.064159	WB EXPRESSWAY TO I-26 WB (Basic Anal	NW
4603	1	82.941324	I-126 NB (Basic Analysis)	NW
4603	2	97.585177	I-126 NB (Basic Analysis)	NW
4603	3	88.998754	I-126 NB (Basic Analysis)	NW
4603	4	97.673179	I-126 NB (Basic Analysis)	NW
4603	5	88.665606	I-126 NB (Basic Analysis)	NW
4603	6	87.284822	I-126 NB (Basic Analysis)	NW
4603	7	85.313172	I-126 NB (Basic Analysis)	NW
4603	8	89.294187	I-126 NB (Basic Analysis)	NW
4603	9	90.578589	I-126 NB (Basic Analysis)	NW
4603	10	98.387666	I-126 NB (Basic Analysis)	NW
4609	1	16.641731	I-126 SB (Basic Analysis)	SE
4609	2	15.888936	I-126 SB (Basic Analysis)	SE
4609	3	14.701927	I-126 SB (Basic Analysis)	SE
4609	4	15.395725	I-126 SB (Basic Analysis)	SE
4609	5	16.549697	I-126 SB (Basic Analysis)	SE
4609	6	15.178618	I-126 SB (Basic Analysis)	SE
4609	7	16.117843	I-126 SB (Basic Analysis)	SE
4609	8	15.173898	I-126 SB (Basic Analysis)	SE
4609	9	15.539677	I-126 SB (Basic Analysis)	SE
4609	10	15.565635	I-126 SB (Basic Analysis)	SE
4611	1	41.491988	I-26 EB (Diverge Analysis)	SE
4611	2	39.312521	I-26 EB (Diverge Analysis)	SE
4611	3	40.301055	I-26 EB (Diverge Analysis)	SE
4611	4	40.427188	I-26 EB (Diverge Analysis)	SE
4611	5	41.471454	I-26 EB (Diverge Analysis)	SE
4611	6	40.975721	I-26 EB (Diverge Analysis)	SE
4611	7	40.207188	I-26 EB (Diverge Analysis)	SE
4611	8	41.398121	I-26 EB (Diverge Analysis)	SE
4611	9	40.949321	I-26 EB (Diverge Analysis)	SE
4611	10	39.949055	I-26 EB (Diverge Analysis)	SE
4619	1	106.422792	I-26 WB (Basic Analysis)	NW
4619	2	130.395085	I-26 WB (Basic Analysis)	NW
4619	3	123.476162	I-26 WB (Basic Analysis)	NW
4619	4	129.219755	I-26 WB (Basic Analysis)	NW
4619	5	122.056895	I-26 WB (Basic Analysis)	NW
4619	6	116.379831	I-26 WB (Basic Analysis)	NW
4619	7	114.894037	I-26 WB (Basic Analysis)	NW
4619	8	119.972348	I-26 WB (Basic Analysis)	NW
4619	9	115.404086	I-26 WB (Basic Analysis)	NW
4619	10	134.741587	I-26 WB (Basic Analysis)	NW
4624	1	34.694276	I-26 EB (Weaving Analysis)	SE
4624	2	37.054888	I-26 EB (Weaving Analysis)	SE
4624	3	35.461694	I-26 EB (Weaving Analysis)	SE
4624	4	53.29321	I-26 EB (Weaving Analysis)	SE
4624	5	32.599197	I-26 EB (Weaving Analysis)	SE
4624	6	32.380352	I-26 EB (Weaving Analysis)	SE
4624	7	30.168555	I-26 EB (Weaving Analysis)	SE
4624	8	31.860959	I-26 EB (Weaving Analysis)	SE

Existing PM

ID	Run	Density	Name (Type)	Direction
4624	9	47.013808	I-26 EB (Weaving Analysis)	SE
4624	10	34.764307	I-26 EB (Weaving Analysis)	SE
4639	1	29.257692	I-26 EB (Basic Analysis)	SE
4639	2	29.195574	I-26 EB (Basic Analysis)	SE
4639	3	28.407915	I-26 EB (Basic Analysis)	SE
4639	4	29.481318	I-26 EB (Basic Analysis)	SE
4639	5	29.543436	I-26 EB (Basic Analysis)	SE
4639	6	28.166896	I-26 EB (Basic Analysis)	SE
4639	7	28.0849	I-26 EB (Basic Analysis)	SE
4639	8	28.653903	I-26 EB (Basic Analysis)	SE
4639	9	28.711052	I-26 EB (Basic Analysis)	SE
4639	10	27.652557	I-26 EB (Basic Analysis)	SE
4641	1	33.186265	I-26 EB (Basic Analysis)	SE
4641	2	33.749079	I-26 EB (Basic Analysis)	SE
4641	3	34.286132	I-26 EB (Basic Analysis)	SE
4641	4	34.502141	I-26 EB (Basic Analysis)	SE
4641	5	34.549704	I-26 EB (Basic Analysis)	SE
4641	6	34.169209	I-26 EB (Basic Analysis)	SE
4641	7	33.798623	I-26 EB (Basic Analysis)	SE
4641	8	34.187045	I-26 EB (Basic Analysis)	SE
4641	9	34.890563	I-26 EB (Basic Analysis)	SE
4641	10	33.035652	I-26 EB (Basic Analysis)	SE
4643	1	88.401838	I-26 WB (Weaving Analysis)	NW
4643	2	100.80749	I-26 WB (Weaving Analysis)	NW
4643	3	94.319967	I-26 WB (Weaving Analysis)	NW
4643	4	104.035236	I-26 WB (Weaving Analysis)	NW
4643	5	97.042378	I-26 WB (Weaving Analysis)	NW
4643	6	95.113558	I-26 WB (Weaving Analysis)	NW
4643	7	89.038846	I-26 WB (Weaving Analysis)	NW
4643	8	93.067302	I-26 WB (Weaving Analysis)	NW
4643	9	99.362655	I-26 WB (Weaving Analysis)	NW
4643	10	103.262997	I-26 WB (Weaving Analysis)	NW
4646	1	104.677156	I-26 WB (Basic Analysis)	NW
4646	2	122.129346	I-26 WB (Basic Analysis)	NW
4646	3	114.651441	I-26 WB (Basic Analysis)	NW
4646	4	133.230379	I-26 WB (Basic Analysis)	NW
4646	5	117.127584	I-26 WB (Basic Analysis)	NW
4646	6	114.336584	I-26 WB (Basic Analysis)	NW
4646	7	112.227027	I-26 WB (Basic Analysis)	NW
4646	8	118.036178	I-26 WB (Basic Analysis)	NW
4646	9	124.857375	I-26 WB (Basic Analysis)	NW
4646	10	127.8193	I-26 WB (Basic Analysis)	NW
4649	1	37.699786	I-26 EB (Basic Analysis)	SE
4649	2	36.224577	I-26 EB (Basic Analysis)	SE
4649	3	36.139057	I-26 EB (Basic Analysis)	SE
4649	4	36.428873	I-26 EB (Basic Analysis)	SE
4649	5	36.12718	I-26 EB (Basic Analysis)	SE
4649	6	34.528443	I-26 EB (Basic Analysis)	SE
4649	7	35.309994	I-26 EB (Basic Analysis)	SE
4649	8	35.559426	I-26 EB (Basic Analysis)	SE
4649	9	36.445502	I-26 EB (Basic Analysis)	SE
4649	10	36.837466	I-26 EB (Basic Analysis)	SE
4650	1	31.641365	I-26 EB (Weaving Analysis)	SE
4650	2	31.759732	I-26 EB (Weaving Analysis)	SE
4650	3	31.90551	I-26 EB (Weaving Analysis)	SE
4650	4	32.052534	I-26 EB (Weaving Analysis)	SE
4650	5	31.263837	I-26 EB (Weaving Analysis)	SE
4650	6	30.551143	I-26 EB (Weaving Analysis)	SE
4650	7	30.890046	I-26 EB (Weaving Analysis)	SE
4650	8	30.998445	I-26 EB (Weaving Analysis)	SE
4650	9	31.258853	I-26 EB (Weaving Analysis)	SE
4650	10	31.054514	I-26 EB (Weaving Analysis)	SE
4651	1	94.62145	I-26 WB (Weaving Analysis)	NW
4651	2	105.573755	I-26 WB (Weaving Analysis)	NW

Existing PM

ID	Run	Density	Name (Type)	Direction
4651	3	101.507961	I-26 WB (Weaving Analysis)	NW
4651	4	113.409728	I-26 WB (Weaving Analysis)	NW
4651	5	103.805891	I-26 WB (Weaving Analysis)	NW
4651	6	99.176537	I-26 WB (Weaving Analysis)	NW
4651	7	101.574948	I-26 WB (Weaving Analysis)	NW
4651	8	104.073838	I-26 WB (Weaving Analysis)	NW
4651	9	109.670129	I-26 WB (Weaving Analysis)	NW
4651	10	112.28115	I-26 WB (Weaving Analysis)	NW
4654	1	77.521298	I-26 WB (Basic Analysis)	NW
4654	2	81.68373	I-26 WB (Basic Analysis)	NW
4654	3	79.953303	I-26 WB (Basic Analysis)	NW
4654	4	88.144622	I-26 WB (Basic Analysis)	NW
4654	5	83.380303	I-26 WB (Basic Analysis)	NW
4654	6	80.933251	I-26 WB (Basic Analysis)	NW
4654	7	87.616089	I-26 WB (Basic Analysis)	NW
4654	8	84.450535	I-26 WB (Basic Analysis)	NW
4654	9	84.222946	I-26 WB (Basic Analysis)	NW
4654	10	89.365327	I-26 WB (Basic Analysis)	NW
4659	1	65.630225	I-26 WB (Basic Analysis)	NW
4659	2	65.307735	I-26 WB (Basic Analysis)	NW
4659	3	68.078525	I-26 WB (Basic Analysis)	NW
4659	4	72.205095	I-26 WB (Basic Analysis)	NW
4659	5	65.209012	I-26 WB (Basic Analysis)	NW
4659	6	72.850077	I-26 WB (Basic Analysis)	NW
4659	7	69.131557	I-26 WB (Basic Analysis)	NW
4659	8	68.499738	I-26 WB (Basic Analysis)	NW
4659	9	69.895005	I-26 WB (Basic Analysis)	NW
4659	10	68.407597	I-26 WB (Basic Analysis)	NW
4665	1	38.261958	I-26 EB (Basic Analysis)	SE
4665	2	40.892131	I-26 EB (Basic Analysis)	SE
4665	3	37.313481	I-26 EB (Basic Analysis)	SE
4665	4	39.88984	I-26 EB (Basic Analysis)	SE
4665	5	40.865224	I-26 EB (Basic Analysis)	SE
4665	6	43.46849	I-26 EB (Basic Analysis)	SE
4665	7	43.811556	I-26 EB (Basic Analysis)	SE
4665	8	42.52674	I-26 EB (Basic Analysis)	SE
4665	9	41.046847	I-26 EB (Basic Analysis)	SE
4665	10	44.154623	I-26 EB (Basic Analysis)	SE
4667	1	30.343125	I-26 EB (Merge Analysis)	SE
4667	2	29.231942	I-26 EB (Merge Analysis)	SE
4667	3	29.588359	I-26 EB (Merge Analysis)	SE
4667	4	28.997507	I-26 EB (Merge Analysis)	SE
4667	5	27.133463	I-26 EB (Merge Analysis)	SE
4667	6	28.747824	I-26 EB (Merge Analysis)	SE
4667	7	29.864726	I-26 EB (Merge Analysis)	SE
4667	8	30.41174	I-26 EB (Merge Analysis)	SE
4667	9	29.514026	I-26 EB (Merge Analysis)	SE
4667	10	31.25037	I-26 EB (Merge Analysis)	SE
4668	1	30.343125	I-26 EB (Merge Analysis)	SE
4668	2	29.231942	I-26 EB (Merge Analysis)	SE
4668	3	29.588359	I-26 EB (Merge Analysis)	SE
4668	4	28.997507	I-26 EB (Merge Analysis)	SE
4668	5	27.133463	I-26 EB (Merge Analysis)	SE
4668	6	28.747824	I-26 EB (Merge Analysis)	SE
4668	7	29.864726	I-26 EB (Merge Analysis)	SE
4668	8	30.41174	I-26 EB (Merge Analysis)	SE
4668	9	29.514026	I-26 EB (Merge Analysis)	SE
4668	10	31.25037	I-26 EB (Merge Analysis)	SE
4669	1	34.734285	I-26 EB (Basic Analysis)	SE
4669	2	34.785626	I-26 EB (Basic Analysis)	SE
4669	3	34.116475	I-26 EB (Basic Analysis)	SE
4669	4	34.23456	I-26 EB (Basic Analysis)	SE
4669	5	34.725728	I-26 EB (Basic Analysis)	SE
4669	6	35.028643	I-26 EB (Basic Analysis)	SE

Existing PM

ID	Run	Density	Name (Type)	Direction
4669	7	34.599085	I-26 EB (Basic Analysis)	SE
4669	8	35.365786	I-26 EB (Basic Analysis)	SE
4669	9	35.069716	I-26 EB (Basic Analysis)	SE
4669	10	33.911108	I-26 EB (Basic Analysis)	SE
4670	1	28.537018	I-26 EB (Diverge Analysis)	SE
4670	2	29.34139	I-26 EB (Diverge Analysis)	SE
4670	3	28.509752	I-26 EB (Diverge Analysis)	SE
4670	4	28.898304	I-26 EB (Diverge Analysis)	SE
4670	5	29.166428	I-26 EB (Diverge Analysis)	SE
4670	6	28.418862	I-26 EB (Diverge Analysis)	SE
4670	7	29.789021	I-26 EB (Diverge Analysis)	SE
4670	8	28.82332	I-26 EB (Diverge Analysis)	SE
4670	9	30.352535	I-26 EB (Diverge Analysis)	SE
4670	10	29.411829	I-26 EB (Diverge Analysis)	SE
4675	1	37.165325	I-26 WB (Merge Analysis)	NW
4675	2	36.668614	I-26 WB (Merge Analysis)	NW
4675	3	36.373325	I-26 WB (Merge Analysis)	NW
4675	4	37.929947	I-26 WB (Merge Analysis)	NW
4675	5	34.891014	I-26 WB (Merge Analysis)	NW
4675	6	38.942924	I-26 WB (Merge Analysis)	NW
4675	7	36.21688	I-26 WB (Merge Analysis)	NW
4675	8	36.232525	I-26 WB (Merge Analysis)	NW
4675	9	36.813325	I-26 WB (Merge Analysis)	NW
4675	10	36.230569	I-26 WB (Merge Analysis)	NW
4676	1	48.797386	I-26 WB (Basic Analysis)	NW
4676	2	49.000719	I-26 WB (Basic Analysis)	NW
4676	3	48.75589	I-26 WB (Basic Analysis)	NW
4676	4	49.430623	I-26 WB (Basic Analysis)	NW
4676	5	48.177429	I-26 WB (Basic Analysis)	NW
4676	6	53.039988	I-26 WB (Basic Analysis)	NW
4676	7	49.642255	I-26 WB (Basic Analysis)	NW
4676	8	48.261252	I-26 WB (Basic Analysis)	NW
4676	9	49.149276	I-26 WB (Basic Analysis)	NW
4676	10	48.657958	I-26 WB (Basic Analysis)	NW
4677	1	48.797386	I-26 WB (Basic Analysis)	NW
4677	2	49.000719	I-26 WB (Basic Analysis)	NW
4677	3	48.75589	I-26 WB (Basic Analysis)	NW
4677	4	49.430623	I-26 WB (Basic Analysis)	NW
4677	5	48.177429	I-26 WB (Basic Analysis)	NW
4677	6	53.039988	I-26 WB (Basic Analysis)	NW
4677	7	49.642255	I-26 WB (Basic Analysis)	NW
4677	8	48.261252	I-26 WB (Basic Analysis)	NW
4677	9	49.149276	I-26 WB (Basic Analysis)	NW
4677	10	48.657958	I-26 WB (Basic Analysis)	NW
4687	1	27.530655	I-26 EB (Basic Analysis)	SE
4687	2	27.93299	I-26 EB (Basic Analysis)	SE
4687	3	27.397645	I-26 EB (Basic Analysis)	SE
4687	4	27.189455	I-26 EB (Basic Analysis)	SE
4687	5	27.811546	I-26 EB (Basic Analysis)	SE
4687	6	27.369556	I-26 EB (Basic Analysis)	SE
4687	7	27.880117	I-26 EB (Basic Analysis)	SE
4687	8	27.872682	I-26 EB (Basic Analysis)	SE
4687	9	27.549656	I-26 EB (Basic Analysis)	SE
4687	10	27.835505	I-26 EB (Basic Analysis)	SE
4689	1	39.869395	I-26 WB (Basic Analysis)	NW
4689	2	36.85636	I-26 WB (Basic Analysis)	NW
4689	3	39.665325	I-26 WB (Basic Analysis)	NW
4689	4	39.263648	I-26 WB (Basic Analysis)	NW
4689	5	39.915565	I-26 WB (Basic Analysis)	NW
4689	6	65.160241	I-26 WB (Basic Analysis)	NW
4689	7	65.078982	I-26 WB (Basic Analysis)	NW
4689	8	41.003323	I-26 WB (Basic Analysis)	NW
4689	9	39.311665	I-26 WB (Basic Analysis)	NW
4689	10	45.292489	I-26 WB (Basic Analysis)	NW

Existing PM

ID	Run	Density	Name (Type)	Direction
4700	1	36.16395	I-26 WB (Merge Analysis)	NW
4700	2	33.940249	I-26 WB (Merge Analysis)	NW
4700	3	36.22588	I-26 WB (Merge Analysis)	NW
4700	4	36.246043	I-26 WB (Merge Analysis)	NW
4700	5	36.297891	I-26 WB (Merge Analysis)	NW
4700	6	42.109182	I-26 WB (Merge Analysis)	NW
4700	7	43.602692	I-26 WB (Merge Analysis)	NW
4700	8	37.720829	I-26 WB (Merge Analysis)	NW
4700	9	35.327182	I-26 WB (Merge Analysis)	NW
4700	10	39.54847	I-26 WB (Merge Analysis)	NW
4701	1	41.993015	I-26 WB (Basic Analysis)	NW
4701	2	42.423712	I-26 WB (Basic Analysis)	NW
4701	3	42.694635	I-26 WB (Basic Analysis)	NW
4701	4	41.124673	I-26 WB (Basic Analysis)	NW
4701	5	43.333735	I-26 WB (Basic Analysis)	NW
4701	6	43.604657	I-26 WB (Basic Analysis)	NW
4701	7	44.681402	I-26 WB (Basic Analysis)	NW
4701	8	45.438596	I-26 WB (Basic Analysis)	NW
4701	9	43.347628	I-26 WB (Basic Analysis)	NW
4701	10	44.125662	I-26 WB (Basic Analysis)	NW
4702	1	31.445126	I-26 WB (Diverge Analysis)	NW
4702	2	30.348924	I-26 WB (Diverge Analysis)	NW
4702	3	31.335506	I-26 WB (Diverge Analysis)	NW
4702	4	31.125798	I-26 WB (Diverge Analysis)	NW
4702	5	31.683431	I-26 WB (Diverge Analysis)	NW
4702	6	34.779806	I-26 WB (Diverge Analysis)	NW
4702	7	35.839469	I-26 WB (Diverge Analysis)	NW
4702	8	32.965511	I-26 WB (Diverge Analysis)	NW
4702	9	31.327563	I-26 WB (Diverge Analysis)	NW
4702	10	34.083956	I-26 WB (Diverge Analysis)	NW
4703	1	31.445126	I-26 WB (Diverge Analysis)	NW
4703	2	30.348924	I-26 WB (Diverge Analysis)	NW
4703	3	31.335506	I-26 WB (Diverge Analysis)	NW
4703	4	31.125798	I-26 WB (Diverge Analysis)	NW
4703	5	31.683431	I-26 WB (Diverge Analysis)	NW
4703	6	34.779806	I-26 WB (Diverge Analysis)	NW
4703	7	35.839469	I-26 WB (Diverge Analysis)	NW
4703	8	32.965511	I-26 WB (Diverge Analysis)	NW
4703	9	31.327563	I-26 WB (Diverge Analysis)	NW
4703	10	34.083956	I-26 WB (Diverge Analysis)	NW
4705	1	27.892867	I-26 EB (Merge Analysis)	SE
4705	2	26.409875	I-26 EB (Merge Analysis)	SE
4705	3	26.227318	I-26 EB (Merge Analysis)	SE
4705	4	25.080141	I-26 EB (Merge Analysis)	SE
4705	5	26.590178	I-26 EB (Merge Analysis)	SE
4705	6	28.046125	I-26 EB (Merge Analysis)	SE
4705	7	28.300802	I-26 EB (Merge Analysis)	SE
4705	8	28.521674	I-26 EB (Merge Analysis)	SE
4705	9	28.134022	I-26 EB (Merge Analysis)	SE
4705	10	27.985272	I-26 EB (Merge Analysis)	SE
4706	1	27.892867	I-26 EB (Merge Analysis)	SE
4706	2	26.409875	I-26 EB (Merge Analysis)	SE
4706	3	26.227318	I-26 EB (Merge Analysis)	SE
4706	4	25.080141	I-26 EB (Merge Analysis)	SE
4706	5	26.590178	I-26 EB (Merge Analysis)	SE
4706	6	28.046125	I-26 EB (Merge Analysis)	SE
4706	7	28.300802	I-26 EB (Merge Analysis)	SE
4706	8	28.521674	I-26 EB (Merge Analysis)	SE
4706	9	28.134022	I-26 EB (Merge Analysis)	SE
4706	10	27.985272	I-26 EB (Merge Analysis)	SE
4707	1	28.315458	I-26 EB (Diverge Analysis)	SE
4707	2	28.315458	I-26 EB (Diverge Analysis)	SE
4707	3	27.403192	I-26 EB (Diverge Analysis)	SE
4707	4	26.913325	I-26 EB (Diverge Analysis)	SE

Existing PM

ID	Run	Density	Name (Type)	Direction
4707	5	27.344525	I-26 EB (Diverge Analysis)	SE
4707	6	28.060258	I-26 EB (Diverge Analysis)	SE
4707	7	29.037058	I-26 EB (Diverge Analysis)	SE
4707	8	29.667725	I-26 EB (Diverge Analysis)	SE
4707	9	28.453325	I-26 EB (Diverge Analysis)	SE
4707	10	28.095458	I-26 EB (Diverge Analysis)	SE
4712	1	34.622508	I-26 WB (Basic Analysis)	NW
4712	2	33.505905	I-26 WB (Basic Analysis)	NW
4712	3	34.54685	I-26 WB (Basic Analysis)	NW
4712	4	34.679903	I-26 WB (Basic Analysis)	NW
4712	5	34.257264	I-26 WB (Basic Analysis)	NW
4712	6	35.042539	I-26 WB (Basic Analysis)	NW
4712	7	34.184216	I-26 WB (Basic Analysis)	NW
4712	8	35.916515	I-26 WB (Basic Analysis)	NW
4712	9	33.65983	I-26 WB (Basic Analysis)	NW
4712	10	34.752952	I-26 WB (Basic Analysis)	NW
4714	1	24.098414	I-26 EB (Basic Analysis)	SE
4714	2	24.301343	I-26 EB (Basic Analysis)	SE
4714	3	24.373267	I-26 EB (Basic Analysis)	SE
4714	4	23.710538	I-26 EB (Basic Analysis)	SE
4714	5	23.176245	I-26 EB (Basic Analysis)	SE
4714	6	23.334221	I-26 EB (Basic Analysis)	SE
4714	7	24.699494	I-26 EB (Basic Analysis)	SE
4714	8	24.483722	I-26 EB (Basic Analysis)	SE
4714	9	22.463426	I-26 EB (Basic Analysis)	SE
4714	10	23.851818	I-26 EB (Basic Analysis)	SE
4718	1	23.543743	I-26 EB (Merge Analysis)	SE
4718	2	24.282909	I-26 EB (Merge Analysis)	SE
4718	3	23.304659	I-26 EB (Merge Analysis)	SE
4718	4	22.896225	I-26 EB (Merge Analysis)	SE
4718	5	23.679223	I-26 EB (Merge Analysis)	SE
4718	6	25.980402	I-26 EB (Merge Analysis)	SE
4718	7	23.890414	I-26 EB (Merge Analysis)	SE
4718	8	25.324914	I-26 EB (Merge Analysis)	SE
4718	9	23.489949	I-26 EB (Merge Analysis)	SE
4718	10	25.0679	I-26 EB (Merge Analysis)	SE
4719	1	23.543743	I-26 EB (Merge Analysis)	SE
4719	2	24.282909	I-26 EB (Merge Analysis)	SE
4719	3	23.304659	I-26 EB (Merge Analysis)	SE
4719	4	22.896225	I-26 EB (Merge Analysis)	SE
4719	5	23.679223	I-26 EB (Merge Analysis)	SE
4719	6	25.980402	I-26 EB (Merge Analysis)	SE
4719	7	23.890414	I-26 EB (Merge Analysis)	SE
4719	8	25.324914	I-26 EB (Merge Analysis)	SE
4719	9	23.489949	I-26 EB (Merge Analysis)	SE
4719	10	25.0679	I-26 EB (Merge Analysis)	SE
4720	1	23.718926	I-26 EB (Diverge Analysis)	SE
4720	2	25.115193	I-26 EB (Diverge Analysis)	SE
4720	3	25.018393	I-26 EB (Diverge Analysis)	SE
4720	4	23.979993	I-26 EB (Diverge Analysis)	SE
4720	5	24.358393	I-26 EB (Diverge Analysis)	SE
4720	6	23.812793	I-26 EB (Diverge Analysis)	SE
4720	7	25.654926	I-26 EB (Diverge Analysis)	SE
4720	8	26.168259	I-26 EB (Diverge Analysis)	SE
4720	9	24.094393	I-26 EB (Diverge Analysis)	SE
4720	10	25.376259	I-26 EB (Diverge Analysis)	SE
4725	1	35.888901	I-26 WB (Merge Analysis)	NW
4725	2	33.109862	I-26 WB (Merge Analysis)	NW
4725	3	36.202361	I-26 WB (Merge Analysis)	NW
4725	4	38.143946	I-26 WB (Merge Analysis)	NW
4725	5	34.291187	I-26 WB (Merge Analysis)	NW
4725	6	35.217533	I-26 WB (Merge Analysis)	NW
4725	7	34.047904	I-26 WB (Merge Analysis)	NW
4725	8	36.050309	I-26 WB (Merge Analysis)	NW

ID	Run	Density	Name (Type)	Direction
4725	9	34.737986	I-26 WB (Merge Analysis)	NW
4725	10	34.7567	I-26 WB (Merge Analysis)	NW
4726	1		I-26 WB (Basic Analysis)	NW
4726	2		I-26 WB (Basic Analysis)	NW
4726	3		I-26 WB (Basic Analysis)	NW
4726	4		I-26 WB (Basic Analysis)	NW
4726	5		I-26 WB (Basic Analysis)	NW
4726	6		I-26 WB (Basic Analysis)	NW
4726	7		I-26 WB (Basic Analysis)	NW
4726	8		I-26 WB (Basic Analysis)	NW
4726	9		I-26 WB (Basic Analysis)	NW
4726	10		I-26 WB (Basic Analysis)	NW
4727	1	35.432683	I-26 WB (Diverge Analysis)	NW
4727	2	34.648711	I-26 WB (Diverge Analysis)	NW
4727	3	37.132895	I-26 WB (Diverge Analysis)	NW
4727	4	40.848348	I-26 WB (Diverge Analysis)	NW
4727	5	35.367754	I-26 WB (Diverge Analysis)	NW
4727	6	35.82467	I-26 WB (Diverge Analysis)	NW
4727	7	34.340893	I-26 WB (Diverge Analysis)	NW
4727	8	36.16375	I-26 WB (Diverge Analysis)	NW
4727	9	35.038293	I-26 WB (Diverge Analysis)	NW
4727	10	36.688002	I-26 WB (Diverge Analysis)	NW
4728	1	40.761388	I-26 WB (Basic Analysis)	NW
4728	2	37.947256	I-26 WB (Basic Analysis)	NW
4728	3	45.229184	I-26 WB (Basic Analysis)	NW
4728	4	46.979554	I-26 WB (Basic Analysis)	NW
4728	5	37.038224	I-26 WB (Basic Analysis)	NW
4728	6	39.359157	I-26 WB (Basic Analysis)	NW
4728	7	40.780729	I-26 WB (Basic Analysis)	NW
4728	8	37.792527	I-26 WB (Basic Analysis)	NW
4728	9	35.858417	I-26 WB (Basic Analysis)	NW
4728	10	37.270317	I-26 WB (Basic Analysis)	NW
4729	1	30.560858	I-26 WB (Diverge Analysis)	NW
4729	2	26.703255	I-26 WB (Diverge Analysis)	NW
4729	3	36.339542	I-26 WB (Diverge Analysis)	NW
4729	4	37.060775	I-26 WB (Diverge Analysis)	NW
4729	5	29.396298	I-26 WB (Diverge Analysis)	NW
4729	6	31.767323	I-26 WB (Diverge Analysis)	NW
4729	7	27.755329	I-26 WB (Diverge Analysis)	NW
4729	8	26.910582	I-26 WB (Diverge Analysis)	NW
4729	9	27.060563	I-26 WB (Diverge Analysis)	NW
4729	10	30.373381	I-26 WB (Diverge Analysis)	NW
4730	1	30.560858	I-26 WB (Diverge Analysis)	NW
4730	2	26.703255	I-26 WB (Diverge Analysis)	NW
4730	3	36.339542	I-26 WB (Diverge Analysis)	NW
4730	4	37.060775	I-26 WB (Diverge Analysis)	NW
4730	5	29.396298	I-26 WB (Diverge Analysis)	NW
4730	6	31.767323	I-26 WB (Diverge Analysis)	NW
4730	7	27.755329	I-26 WB (Diverge Analysis)	NW
4730	8	26.910582	I-26 WB (Diverge Analysis)	NW
4730	9	27.060563	I-26 WB (Diverge Analysis)	NW
4730	10	30.373381	I-26 WB (Diverge Analysis)	NW
4732	1	51.511567	I-26 WB (Basic Analysis)	NW
4732	2	42.90605	I-26 WB (Basic Analysis)	NW
4732	3	58.867055	I-26 WB (Basic Analysis)	NW
4732	4	70.178071	I-26 WB (Basic Analysis)	NW
4732	5	50.776596	I-26 WB (Basic Analysis)	NW
4732	6	58.239147	I-26 WB (Basic Analysis)	NW
4732	7	45.006792	I-26 WB (Basic Analysis)	NW

Existing PM

ID	Run	Density	Name (Type)	Direction
4732	8	38.768226	I-26 WB (Basic Analysis)	NW
4732	9	52.119219	I-26 WB (Basic Analysis)	NW
4732	10	48.34888	I-26 WB (Basic Analysis)	NW
4733	1	21.438635	I-26 EB (Basic Analysis)	SE
4733	2	20.972267	I-26 EB (Basic Analysis)	SE
4733	3	21.55815	I-26 EB (Basic Analysis)	SE
4733	4	21.468513	I-26 EB (Basic Analysis)	SE
4733	5	20.881332	I-26 EB (Basic Analysis)	SE
4733	6	20.54617	I-26 EB (Basic Analysis)	SE
4733	7	22.199893	I-26 EB (Basic Analysis)	SE
4733	8	21.230783	I-26 EB (Basic Analysis)	SE
4733	9	20.859247	I-26 EB (Basic Analysis)	SE
4733	10	20.859247	I-26 EB (Basic Analysis)	SE
4736	1	22.763012	I-26 EB (Basic Analysis)	SE
4736	2	22.948935	I-26 EB (Basic Analysis)	SE
4736	3	20.411337	I-26 EB (Basic Analysis)	SE
4736	4	23.903676	I-26 EB (Basic Analysis)	SE
4736	5	23.888601	I-26 EB (Basic Analysis)	SE
4736	6	24.767966	I-26 EB (Basic Analysis)	SE
4736	7	19.587246	I-26 EB (Basic Analysis)	SE
4736	8	22.290667	I-26 EB (Basic Analysis)	SE
4736	9	24.39612	I-26 EB (Basic Analysis)	SE
4736	10	24.41622	I-26 EB (Basic Analysis)	SE
4737	1	17.840443	I-26 EB (Diverge Analysis)	SE
4737	2	18.996699	I-26 EB (Diverge Analysis)	SE
4737	3	17.632909	I-26 EB (Diverge Analysis)	SE
4737	4	17.383375	I-26 EB (Diverge Analysis)	SE
4737	5	18.060329	I-26 EB (Diverge Analysis)	SE
4737	6	17.991151	I-26 EB (Diverge Analysis)	SE
4737	7	19.574827	I-26 EB (Diverge Analysis)	SE
4737	8	18.974463	I-26 EB (Diverge Analysis)	SE
4737	9	17.104194	I-26 EB (Diverge Analysis)	SE
4737	10	17.408082	I-26 EB (Diverge Analysis)	SE
4739	1	54.498811	I-26 WB (Weaving Analysis)	NW
4739	2	51.197528	I-26 WB (Weaving Analysis)	NW
4739	3	62.711601	I-26 WB (Weaving Analysis)	NW
4739	4	69.688537	I-26 WB (Weaving Analysis)	NW
4739	5	58.306346	I-26 WB (Weaving Analysis)	NW
4739	6	55.615546	I-26 WB (Weaving Analysis)	NW
4739	7	47.968568	I-26 WB (Weaving Analysis)	NW
4739	8	40.840606	I-26 WB (Weaving Analysis)	NW
4739	9	60.116521	I-26 WB (Weaving Analysis)	NW
4739	10	48.647118	I-26 WB (Weaving Analysis)	NW
4741	1	79.462067	I-26 WB (Basic Analysis)	NW
4741	2	78.112102	I-26 WB (Basic Analysis)	NW
4741	3	90.568974	I-26 WB (Basic Analysis)	NW
4741	4	98.806191	I-26 WB (Basic Analysis)	NW
4741	5	85.743047	I-26 WB (Basic Analysis)	NW
4741	6	83.148203	I-26 WB (Basic Analysis)	NW
4741	7	71.063178	I-26 WB (Basic Analysis)	NW
4741	8	59.915855	I-26 WB (Basic Analysis)	NW
4741	9	83.819144	I-26 WB (Basic Analysis)	NW
4741	10	77.020812	I-26 WB (Basic Analysis)	NW
4742	1	74.549516	I-26 WB (Diverge Analysis)	NW
4742	2	74.876952	I-26 WB (Diverge Analysis)	NW
4742	3	81.861502	I-26 WB (Diverge Analysis)	NW
4742	4	82.96833	I-26 WB (Diverge Analysis)	NW

Existing PM

ID	Run	Density	Name (Type)	Direction
4742	5	77.081386	I-26 WB (Diverge Analysis)	NW
4742	6	79.168219	I-26 WB (Diverge Analysis)	NW
4742	7	68.625677	I-26 WB (Diverge Analysis)	NW
4742	8	58.943233	I-26 WB (Diverge Analysis)	NW
4742	9	74.946129	I-26 WB (Diverge Analysis)	NW
4742	10	74.284338	I-26 WB (Diverge Analysis)	NW
4745	1	17.501725	I-26 EB (Basic Analysis)	SE
4745	2	17.000692	I-26 EB (Basic Analysis)	SE
4745	3	19.674958	I-26 EB (Basic Analysis)	SE
4745	4	17.630115	I-26 EB (Basic Analysis)	SE
4745	5	18.531975	I-26 EB (Basic Analysis)	SE
4745	6	16.959982	I-26 EB (Basic Analysis)	SE
4745	7	19.095638	I-26 EB (Basic Analysis)	SE
4745	8	16.543498	I-26 EB (Basic Analysis)	SE
4745	9	19.067454	I-26 EB (Basic Analysis)	SE
4745	10	17.194842	I-26 EB (Basic Analysis)	SE
4748	1	18.998219	I-26 EB (Weaving Analysis)	SE
4748	2	17.002341	I-26 EB (Weaving Analysis)	SE
4748	3	18.626682	I-26 EB (Weaving Analysis)	SE
4748	4	16.596822	I-26 EB (Weaving Analysis)	SE
4748	5	19.797929	I-26 EB (Weaving Analysis)	SE
4748	6	19.111492	I-26 EB (Weaving Analysis)	SE
4748	7	16.705565	I-26 EB (Weaving Analysis)	SE
4748	8	19.27234	I-26 EB (Weaving Analysis)	SE
4748	9	19.526073	I-26 EB (Weaving Analysis)	SE
4748	10	19.686921	I-26 EB (Weaving Analysis)	SE
4753	1	131.845062	I-26 WB (Basic Analysis)	NW
4753	2	130.426494	I-26 WB (Basic Analysis)	NW
4753	3	134.911595	I-26 WB (Basic Analysis)	NW
4753	4	137.17392	I-26 WB (Basic Analysis)	NW
4753	5	128.533313	I-26 WB (Basic Analysis)	NW
4753	6	132.480518	I-26 WB (Basic Analysis)	NW
4753	7	139.378237	I-26 WB (Basic Analysis)	NW
4753	8	108.533617	I-26 WB (Basic Analysis)	NW
4753	9	129.891236	I-26 WB (Basic Analysis)	NW
4753	10	131.225428	I-26 WB (Basic Analysis)	NW
4755	1	18.464098	I-26 EB (Basic Analysis)	SE
4755	2	18.740056	I-26 EB (Basic Analysis)	SE
4755	3	19.325422	I-26 EB (Basic Analysis)	SE
4755	4	18.819499	I-26 EB (Basic Analysis)	SE
4755	5	17.908001	I-26 EB (Basic Analysis)	SE
4755	6	18.735875	I-26 EB (Basic Analysis)	SE
4755	7	19.994411	I-26 EB (Basic Analysis)	SE
4755	8	18.551903	I-26 EB (Basic Analysis)	SE
4755	9	19.325422	I-26 EB (Basic Analysis)	SE
4755	10	19.726815	I-26 EB (Basic Analysis)	SE
4756	1	17.075343	I-26 EB (Diverge Analysis)	SE
4756	2	16.949771	I-26 EB (Diverge Analysis)	SE
4756	3	17.227478	I-26 EB (Diverge Analysis)	SE
4756	4	17.232307	I-26 EB (Diverge Analysis)	SE
4756	5	13.808062	I-26 EB (Diverge Analysis)	SE
4756	6	15.256967	I-26 EB (Diverge Analysis)	SE
4756	7	17.543822	I-26 EB (Diverge Analysis)	SE
4756	8	16.167362	I-26 EB (Diverge Analysis)	SE
4756	9	15.199011	I-26 EB (Diverge Analysis)	SE
4756	10	15.529844	I-26 EB (Diverge Analysis)	SE
4760	1	93.788181	I-26 WB (Merge Analysis)	NW

Existing PM

ID	Run	Density	Name (Type)	Direction
4760	2	97.391963	I-26 WB (Merge Analysis)	NW
4760	3	95.355879	I-26 WB (Merge Analysis)	NW
4760	4	95.894843	I-26 WB (Merge Analysis)	NW
4760	5	95.060733	I-26 WB (Merge Analysis)	NW
4760	6	96.502246	I-26 WB (Merge Analysis)	NW
4760	7	97.537398	I-26 WB (Merge Analysis)	NW
4760	8	94.399862	I-26 WB (Merge Analysis)	NW
4760	9	95.257497	I-26 WB (Merge Analysis)	NW
4760	10	94.772003	I-26 WB (Merge Analysis)	NW
4761	1	93.788181	I-26 WB (Merge Analysis)	NW
4761	2	97.391963	I-26 WB (Merge Analysis)	NW
4761	3	95.355879	I-26 WB (Merge Analysis)	NW
4761	4	95.894843	I-26 WB (Merge Analysis)	NW
4761	5	95.060733	I-26 WB (Merge Analysis)	NW
4761	6	96.502246	I-26 WB (Merge Analysis)	NW
4761	7	97.537398	I-26 WB (Merge Analysis)	NW
4761	8	94.399862	I-26 WB (Merge Analysis)	NW
4761	9	95.257497	I-26 WB (Merge Analysis)	NW
4761	10	94.772003	I-26 WB (Merge Analysis)	NW
4764	1	35.688291	I-26 WB (Basic Analysis)	NW
4764	2	36.131981	I-26 WB (Basic Analysis)	NW
4764	3	36.098618	I-26 WB (Basic Analysis)	NW
4764	4	36.206941	I-26 WB (Basic Analysis)	NW
4764	5	35.911003	I-26 WB (Basic Analysis)	NW
4764	6	36.504613	I-26 WB (Basic Analysis)	NW
4764	7	36.261319	I-26 WB (Basic Analysis)	NW
4764	8	36.153863	I-26 WB (Basic Analysis)	NW
4764	9	35.888472	I-26 WB (Basic Analysis)	NW
4764	10	36.021276	I-26 WB (Basic Analysis)	NW
4768	1	27.208167	I-26 EB (Basic Analysis)	SE
4768	2	26.896101	I-26 EB (Basic Analysis)	SE
4768	3	27.627656	I-26 EB (Basic Analysis)	SE
4768	4	26.903913	I-26 EB (Basic Analysis)	SE
4768	5	27.485077	I-26 EB (Basic Analysis)	SE
4768	6	26.811899	I-26 EB (Basic Analysis)	SE
4768	7	27.781302	I-26 EB (Basic Analysis)	SE
4768	8	27.977266	I-26 EB (Basic Analysis)	SE
4768	9	27.224009	I-26 EB (Basic Analysis)	SE
4768	10	27.234643	I-26 EB (Basic Analysis)	SE
4769	1	25.91815	I-26 EB (Diverge Analysis)	SE
4769	2	25.571741	I-26 EB (Diverge Analysis)	SE
4769	3	24.266848	I-26 EB (Diverge Analysis)	SE
4769	4	26.321859	I-26 EB (Diverge Analysis)	SE
4769	5	28.204969	I-26 EB (Diverge Analysis)	SE
4769	6	28.186737	I-26 EB (Diverge Analysis)	SE
4769	7	24.027227	I-26 EB (Diverge Analysis)	SE
4769	8	27.809073	I-26 EB (Diverge Analysis)	SE
4769	9	24.764322	I-26 EB (Diverge Analysis)	SE
4769	10	28.72328	I-26 EB (Diverge Analysis)	SE
6149	1	17.60391	I-26 EB (Merge Analysis)	S
6149	2	17.453222	I-26 EB (Merge Analysis)	S
6149	3	17.444358	I-26 EB (Merge Analysis)	S
6149	4	17.165142	I-26 EB (Merge Analysis)	S
6149	5	17.637889	I-26 EB (Merge Analysis)	S
6149	6	17.782668	I-26 EB (Merge Analysis)	S
6149	7	17.200598	I-26 EB (Merge Analysis)	S
6149	8	17.689596	I-26 EB (Merge Analysis)	S

Existing PM

ID	Run	Density	Name (Type)	Direction
6149	9	16.940587	I-26 EB (Merge Analysis)	S
6149	10	18.156433	I-26 EB (Merge Analysis)	S
6150	1	17.60391	I-26 EB (Merge Analysis)	S
6150	2	17.453222	I-26 EB (Merge Analysis)	S
6150	3	17.444358	I-26 EB (Merge Analysis)	S
6150	4	17.165142	I-26 EB (Merge Analysis)	S
6150	5	17.637889	I-26 EB (Merge Analysis)	S
6150	6	17.782668	I-26 EB (Merge Analysis)	S
6150	7	17.200598	I-26 EB (Merge Analysis)	S
6150	8	17.689596	I-26 EB (Merge Analysis)	S
6150	9	16.940587	I-26 EB (Merge Analysis)	S
6150	10	18.156433	I-26 EB (Merge Analysis)	S
6151	1	22.800489	I-26 EB (Basic Analysis)	S
6151	2	22.834844	I-26 EB (Basic Analysis)	S
6151	3	24.100514	I-26 EB (Basic Analysis)	S
6151	4	23.391164	I-26 EB (Basic Analysis)	S
6151	5	22.656916	I-26 EB (Basic Analysis)	S
6151	6	24.57496	I-26 EB (Basic Analysis)	S
6151	7	21.674373	I-26 EB (Basic Analysis)	S
6151	8	23.830914	I-26 EB (Basic Analysis)	S
6151	9	22.899159	I-26 EB (Basic Analysis)	S
6151	10	24.266863	I-26 EB (Basic Analysis)	S
6152	1	22.800489	I-26 EB (Basic Analysis)	S
6152	2	22.834844	I-26 EB (Basic Analysis)	S
6152	3	24.100514	I-26 EB (Basic Analysis)	S
6152	4	23.391164	I-26 EB (Basic Analysis)	S
6152	5	22.656916	I-26 EB (Basic Analysis)	S
6152	6	24.57496	I-26 EB (Basic Analysis)	S
6152	7	21.674373	I-26 EB (Basic Analysis)	S
6152	8	23.830914	I-26 EB (Basic Analysis)	S
6152	9	22.899159	I-26 EB (Basic Analysis)	S
6152	10	24.266863	I-26 EB (Basic Analysis)	S
6159	1	23.248556	I-26 WB (Diverge Analysis)	N
6159	2	25.211721	I-26 WB (Diverge Analysis)	N
6159	3	23.896672	I-26 WB (Diverge Analysis)	N
6159	4	24.91066	I-26 WB (Diverge Analysis)	N
6159	5	23.328002	I-26 WB (Diverge Analysis)	N
6159	6	23.685511	I-26 WB (Diverge Analysis)	N
6159	7	24.475795	I-26 WB (Diverge Analysis)	N
6159	8	24.672321	I-26 WB (Diverge Analysis)	N
6159	9	24.312721	I-26 WB (Diverge Analysis)	N
6159	10	25.667493	I-26 WB (Diverge Analysis)	N
6160	1	23.248556	I-26 WB (Diverge Analysis)	N
6160	2	25.211721	I-26 WB (Diverge Analysis)	N
6160	3	23.896672	I-26 WB (Diverge Analysis)	N
6160	4	24.91066	I-26 WB (Diverge Analysis)	N
6160	5	23.328002	I-26 WB (Diverge Analysis)	N
6160	6	23.685511	I-26 WB (Diverge Analysis)	N
6160	7	24.475795	I-26 WB (Diverge Analysis)	N
6160	8	24.672321	I-26 WB (Diverge Analysis)	N
6160	9	24.312721	I-26 WB (Diverge Analysis)	N
6160	10	25.667493	I-26 WB (Diverge Analysis)	N
6165	1	18.313051	I-26 WB (Basic Analysis)	N
6165	2	18.614726	I-26 WB (Basic Analysis)	N
6165	3	19.063811	I-26 WB (Basic Analysis)	N
6165	4	18.804416	I-26 WB (Basic Analysis)	N
6165	5	18.500456	I-26 WB (Basic Analysis)	N

Existing PM

ID	Run	Density	Name (Type)	Direction
6165	6	19.352916	I-26 WB (Basic Analysis)	N
6165	7	20.22366	I-26 WB (Basic Analysis)	N
6165	8	18.867265	I-26 WB (Basic Analysis)	N
6165	9	18.805559	I-26 WB (Basic Analysis)	N
6165	10	19.5906	I-26 WB (Basic Analysis)	N
6166	1	19.027349	I-26 EB (Basic Analysis)	S
6166	2	19.274405	I-26 EB (Basic Analysis)	S
6166	3	19.835748	I-26 EB (Basic Analysis)	S
6166	4	20.161375	I-26 EB (Basic Analysis)	S
6166	5	19.723965	I-26 EB (Basic Analysis)	S
6166	6	19.92647	I-26 EB (Basic Analysis)	S
6166	7	19.116451	I-26 EB (Basic Analysis)	S
6166	8	20.078754	I-26 EB (Basic Analysis)	S
6166	9	19.609752	I-26 EB (Basic Analysis)	S
6166	10	19.796867	I-26 EB (Basic Analysis)	S
6174	1	17.436142	I-26 WB (Basic Analysis)	N
6174	2	26.373576	I-26 WB (Basic Analysis)	N
6174	3	23.270864	I-26 WB (Basic Analysis)	N
6174	4	38.326186	I-26 WB (Basic Analysis)	N
6174	5	18.656345	I-26 WB (Basic Analysis)	N
6174	6	19.44046	I-26 WB (Basic Analysis)	N
6174	7	21.686815	I-26 WB (Basic Analysis)	N
6174	8	18.621542	I-26 WB (Basic Analysis)	N
6174	9	25.553076	I-26 WB (Basic Analysis)	N
6174	10	41.756887	I-26 WB (Basic Analysis)	N
6175	1	17.436142	I-26 WB (Basic Analysis)	N
6175	2	26.373576	I-26 WB (Basic Analysis)	N
6175	3	23.270864	I-26 WB (Basic Analysis)	N
6175	4	38.326186	I-26 WB (Basic Analysis)	N
6175	5	18.656345	I-26 WB (Basic Analysis)	N
6175	6	19.44046	I-26 WB (Basic Analysis)	N
6175	7	21.686815	I-26 WB (Basic Analysis)	N
6175	8	18.621542	I-26 WB (Basic Analysis)	N
6175	9	25.553076	I-26 WB (Basic Analysis)	N
6175	10	41.756887	I-26 WB (Basic Analysis)	N
6177	1	84.981953	I-26 EB (Basic Analysis)	S
6177	2	58.956243	I-26 EB (Basic Analysis)	S
6177	3	68.582992	I-26 EB (Basic Analysis)	S
6177	4	84.478476	I-26 EB (Basic Analysis)	S
6177	5	68.679641	I-26 EB (Basic Analysis)	S
6177	6	75.622678	I-26 EB (Basic Analysis)	S
6177	7	86.818295	I-26 EB (Basic Analysis)	S
6177	8	75.501304	I-26 EB (Basic Analysis)	S
6177	9	74.6382	I-26 EB (Basic Analysis)	S
6177	10	80.214656	I-26 EB (Basic Analysis)	S
6178	1	109.48631	I-26 EB (Diverge Analysis)	S
6178	2	106.179263	I-26 EB (Diverge Analysis)	S
6178	3	105.131071	I-26 EB (Diverge Analysis)	S
6178	4	106.519925	I-26 EB (Diverge Analysis)	S
6178	5	104.787788	I-26 EB (Diverge Analysis)	S
6178	6	103.123782	I-26 EB (Diverge Analysis)	S
6178	7	112.444833	I-26 EB (Diverge Analysis)	S
6178	8	104.682968	I-26 EB (Diverge Analysis)	S
6178	9	104.161493	I-26 EB (Diverge Analysis)	S
6178	10	104.659384	I-26 EB (Diverge Analysis)	S
6185	1	77.345722	I-26 EB (Merge Analysis)	S
6185	2	36.413996	I-26 EB (Merge Analysis)	S

Existing PM

ID	Run	Density	Name (Type)	Direction
6185	3	41.206743	I-26 EB (Merge Analysis)	S
6185	4	75.43206	I-26 EB (Merge Analysis)	S
6185	5	44.936664	I-26 EB (Merge Analysis)	S
6185	6	37.516929	I-26 EB (Merge Analysis)	S
6185	7	70.604935	I-26 EB (Merge Analysis)	S
6185	8	43.086027	I-26 EB (Merge Analysis)	S
6185	9	41.135124	I-26 EB (Merge Analysis)	S
6185	10	54.055203	I-26 EB (Merge Analysis)	S
6186	1	74.327698	I-26 EB (Basic Analysis)	S
6186	2	34.293565	I-26 EB (Basic Analysis)	S
6186	3	40.751506	I-26 EB (Basic Analysis)	S
6186	4	73.750612	I-26 EB (Basic Analysis)	S
6186	5	45.070084	I-26 EB (Basic Analysis)	S
6186	6	41.167581	I-26 EB (Basic Analysis)	S
6186	7	72.365288	I-26 EB (Basic Analysis)	S
6186	8	46.70091	I-26 EB (Basic Analysis)	S
6186	9	46.975105	I-26 EB (Basic Analysis)	S
6186	10	58.392477	I-26 EB (Basic Analysis)	S
6200	1	90.752489	I-26 WB (Weaving Analysis)	NW
6200	2	107.03185	I-26 WB (Weaving Analysis)	NW
6200	3	99.660649	I-26 WB (Weaving Analysis)	NW
6200	4	108.106579	I-26 WB (Weaving Analysis)	NW
6200	5	100.361347	I-26 WB (Weaving Analysis)	NW
6200	6	99.941581	I-26 WB (Weaving Analysis)	NW
6200	7	94.659406	I-26 WB (Weaving Analysis)	NW
6200	8	99.431984	I-26 WB (Weaving Analysis)	NW
6200	9	101.875439	I-26 WB (Weaving Analysis)	NW
6200	10	106.582685	I-26 WB (Weaving Analysis)	NW
6204	1	90.769927	I-26 WB (Basic Analysis)	NW
6204	2	104.705371	I-26 WB (Basic Analysis)	NW
6204	3	99.785246	I-26 WB (Basic Analysis)	NW
6204	4	107.710477	I-26 WB (Basic Analysis)	NW
6204	5	98.587131	I-26 WB (Basic Analysis)	NW
6204	6	99.791138	I-26 WB (Basic Analysis)	NW
6204	7	90.938841	I-26 WB (Basic Analysis)	NW
6204	8	97.687563	I-26 WB (Basic Analysis)	NW
6204	9	100.873369	I-26 WB (Basic Analysis)	NW
6204	10	104.895891	I-26 WB (Basic Analysis)	NW
6205	1	21.628626	I-20 EB (Basic Analysis)	E
6205	2	19.001076	I-20 EB (Basic Analysis)	E
6205	3	20.980586	I-20 EB (Basic Analysis)	E
6205	4	21.126561	I-20 EB (Basic Analysis)	E
6205	5	18.974536	I-20 EB (Basic Analysis)	E
6205	6	20.609013	I-20 EB (Basic Analysis)	E
6205	7	19.930008	I-20 EB (Basic Analysis)	E
6205	8	19.540742	I-20 EB (Basic Analysis)	E
6205	9	21.16416	I-20 EB (Basic Analysis)	E
6205	10	19.268697	I-20 EB (Basic Analysis)	E
6206	1	19.127136	I-20 EB (Merge Analysis)	E
6206	2	20.606055	I-20 EB (Merge Analysis)	E
6206	3	21.022356	I-20 EB (Merge Analysis)	E
6206	4	20.090944	I-20 EB (Merge Analysis)	E
6206	5	19.710281	I-20 EB (Merge Analysis)	E
6206	6	20.314483	I-20 EB (Merge Analysis)	E
6206	7	43.147826	I-20 EB (Merge Analysis)	E
6206	8	20.112002	I-20 EB (Merge Analysis)	E
6206	9	19.622809	I-20 EB (Merge Analysis)	E

ID	Run	Density	Name (Type)	Direction
6206	10	19.3037	I-20 EB (Merge Analysis)	E
6207	1	19.127136	I-20 EB (Merge Analysis)	E
6207	2	20.606055	I-20 EB (Merge Analysis)	E
6207	3	21.022356	I-20 EB (Merge Analysis)	E
6207	4	20.090944	I-20 EB (Merge Analysis)	E
6207	5	19.710281	I-20 EB (Merge Analysis)	E
6207	6	20.314483	I-20 EB (Merge Analysis)	E
6207	7	43.147826	I-20 EB (Merge Analysis)	E
6207	8	20.112002	I-20 EB (Merge Analysis)	E
6207	9	19.622809	I-20 EB (Merge Analysis)	E
6207	10	19.3037	I-20 EB (Merge Analysis)	E
6208	1	19.390767	I-20 EB (Diverge Analysis)	E
6208	2	21.017494	I-20 EB (Diverge Analysis)	E
6208	3	21.479775	I-20 EB (Diverge Analysis)	E
6208	4	20.243716	I-20 EB (Diverge Analysis)	E
6208	5	20.219815	I-20 EB (Diverge Analysis)	E
6208	6	20.449112	I-20 EB (Diverge Analysis)	E
6208	7	42.300881	I-20 EB (Diverge Analysis)	E
6208	8	20.532015	I-20 EB (Diverge Analysis)	E
6208	9	19.970354	I-20 EB (Diverge Analysis)	E
6208	10	19.647697	I-20 EB (Diverge Analysis)	E
6209	1	19.390767	I-20 EB (Diverge Analysis)	E
6209	2	21.017494	I-20 EB (Diverge Analysis)	E
6209	3	21.479775	I-20 EB (Diverge Analysis)	E
6209	4	20.243716	I-20 EB (Diverge Analysis)	E
6209	5	20.219815	I-20 EB (Diverge Analysis)	E
6209	6	20.449112	I-20 EB (Diverge Analysis)	E
6209	7	42.300881	I-20 EB (Diverge Analysis)	E
6209	8	20.532015	I-20 EB (Diverge Analysis)	E
6209	9	19.970354	I-20 EB (Diverge Analysis)	E
6209	10	19.647697	I-20 EB (Diverge Analysis)	E
6216	1	13.288313	I-20 EB (Merge Analysis)	E
6216	2	12.701185	I-20 EB (Merge Analysis)	E
6216	3	13.737751	I-20 EB (Merge Analysis)	E
6216	4	13.929997	I-20 EB (Merge Analysis)	E
6216	5	13.496146	I-20 EB (Merge Analysis)	E
6216	6	14.143025	I-20 EB (Merge Analysis)	E
6216	7	14.75873	I-20 EB (Merge Analysis)	E
6216	8	13.672803	I-20 EB (Merge Analysis)	E
6216	9	12.745349	I-20 EB (Merge Analysis)	E
6216	10	12.823287	I-20 EB (Merge Analysis)	E
6217	1	14.62568	I-20 EB (Basic Analysis)	E
6217	2	15.520768	I-20 EB (Basic Analysis)	E
6217	3	14.652267	I-20 EB (Basic Analysis)	E
6217	4	14.424802	I-20 EB (Basic Analysis)	E
6217	5	15.048114	I-20 EB (Basic Analysis)	E
6217	6	15.703921	I-20 EB (Basic Analysis)	E
6217	7	15.266716	I-20 EB (Basic Analysis)	E
6217	8	15.328752	I-20 EB (Basic Analysis)	E
6217	9	14.339133	I-20 EB (Basic Analysis)	E
6217	10	16.69354	I-20 EB (Basic Analysis)	E
6220	1	22.248295	I-20 WB (Basic Analysis)	W
6220	2	19.379765	I-20 WB (Basic Analysis)	W
6220	3	20.085961	I-20 WB (Basic Analysis)	W
6220	4	21.671256	I-20 WB (Basic Analysis)	W
6220	5	21.656674	I-20 WB (Basic Analysis)	W
6220	6	20.985892	I-20 WB (Basic Analysis)	W

Existing PM

ID	Run	Density	Name (Type)	Direction
6220	7	20.608838	I-20 WB (Basic Analysis)	W
6220	8	21.944152	I-20 WB (Basic Analysis)	W
6220	9	21.200459	I-20 WB (Basic Analysis)	W
6220	10	21.640009	I-20 WB (Basic Analysis)	W
6223	1	34.072625	I-26 EB (Weaving Analysis)	SE
6223	2	33.746103	I-26 EB (Weaving Analysis)	SE
6223	3	33.226932	I-26 EB (Weaving Analysis)	SE
6223	4	35.871764	I-26 EB (Weaving Analysis)	SE
6223	5	36.335426	I-26 EB (Weaving Analysis)	SE
6223	6	32.779596	I-26 EB (Weaving Analysis)	SE
6223	7	33.817938	I-26 EB (Weaving Analysis)	SE
6223	8	34.072625	I-26 EB (Weaving Analysis)	SE
6223	9	35.826051	I-26 EB (Weaving Analysis)	SE
6223	10	36.835006	I-26 EB (Weaving Analysis)	SE
6227	1	20.227763	I-20 WB (Basic Analysis)	W
6227	2	18.769956	I-20 WB (Basic Analysis)	W
6227	3	18.756203	I-20 WB (Basic Analysis)	W
6227	4	20.255269	I-20 WB (Basic Analysis)	W
6227	5	19.102776	I-20 WB (Basic Analysis)	W
6227	6	17.532195	I-20 WB (Basic Analysis)	W
6227	7	15.667302	I-20 WB (Basic Analysis)	W
6227	8	17.595458	I-20 WB (Basic Analysis)	W
6227	9	18.371122	I-20 WB (Basic Analysis)	W
6227	10	20.153498	I-20 WB (Basic Analysis)	W
6229	1	55.495414	I-20 WB (Merge Analysis)	W
6229	2	59.319689	I-20 WB (Merge Analysis)	W
6229	3	58.0724	I-20 WB (Merge Analysis)	W
6229	4	75.875212	I-20 WB (Merge Analysis)	W
6229	5	57.052297	I-20 WB (Merge Analysis)	W
6229	6	47.99164	I-20 WB (Merge Analysis)	W
6229	7	39.910994	I-20 WB (Merge Analysis)	W
6229	8	62.224088	I-20 WB (Merge Analysis)	W
6229	9	62.199588	I-20 WB (Merge Analysis)	W
6229	10	68.890398	I-20 WB (Merge Analysis)	W
6230	1	55.495414	I-20 WB (Merge+Diverge Analysis)	W
6230	2	59.319689	I-20 WB (Merge+Diverge Analysis)	W
6230	3	58.0724	I-20 WB (Merge+Diverge Analysis)	W
6230	4	75.875212	I-20 WB (Merge+Diverge Analysis)	W
6230	5	57.052297	I-20 WB (Merge+Diverge Analysis)	W
6230	6	47.99164	I-20 WB (Merge+Diverge Analysis)	W
6230	7	39.910994	I-20 WB (Merge+Diverge Analysis)	W
6230	8	62.224088	I-20 WB (Merge+Diverge Analysis)	W
6230	9	62.199588	I-20 WB (Merge+Diverge Analysis)	W
6230	10	68.890398	I-20 WB (Merge+Diverge Analysis)	W
6231	1	56.014712	I-20 WB (Diverge Analysis)	W
6231	2	59.874772	I-20 WB (Diverge Analysis)	W
6231	3	58.615813	I-20 WB (Diverge Analysis)	W
6231	4	76.585213	I-20 WB (Diverge Analysis)	W
6231	5	57.586164	I-20 WB (Diverge Analysis)	W
6231	6	48.440721	I-20 WB (Diverge Analysis)	W
6231	7	40.284461	I-20 WB (Diverge Analysis)	W
6231	8	62.80635	I-20 WB (Diverge Analysis)	W
6231	9	62.78162	I-20 WB (Diverge Analysis)	W
6231	10	69.53504	I-20 WB (Diverge Analysis)	W
6234	1	30.245907	I-20 WB (Basic Analysis)	W
6234	2	29.650172	I-20 WB (Basic Analysis)	W
6234	3	27.822473	I-20 WB (Basic Analysis)	W

Existing PM

ID	Run	Density	Name (Type)	Direction
6234	4	38.26774	I-20 WB (Basic Analysis)	W
6234	5	28.994726	I-20 WB (Basic Analysis)	W
6234	6	27.100453	I-20 WB (Basic Analysis)	W
6234	7	23.06826	I-20 WB (Basic Analysis)	W
6234	8	30.948023	I-20 WB (Basic Analysis)	W
6234	9	31.327564	I-20 WB (Basic Analysis)	W
6234	10	32.828569	I-20 WB (Basic Analysis)	W
6238	1	21.277025	I-20 EB (Basic Analysis)	NE
6238	2	19.300459	I-20 EB (Basic Analysis)	NE
6238	3	19.745339	I-20 EB (Basic Analysis)	NE
6238	4	20.136386	I-20 EB (Basic Analysis)	NE
6238	5	19.673224	I-20 EB (Basic Analysis)	NE
6238	6	19.439611	I-20 EB (Basic Analysis)	NE
6238	7	20.894103	I-20 EB (Basic Analysis)	NE
6238	8	20.064271	I-20 EB (Basic Analysis)	NE
6238	9	20.707213	I-20 EB (Basic Analysis)	NE
6238	10	20.807768	I-20 EB (Basic Analysis)	NE
6241	1	23.722347	I-20 EB (Merge Analysis)	NE
6241	2	23.508966	I-20 EB (Merge Analysis)	NE
6241	3	24.276664	I-20 EB (Merge Analysis)	NE
6241	4	23.140613	I-20 EB (Merge Analysis)	NE
6241	5	23.43148	I-20 EB (Merge Analysis)	NE
6241	6	24.534152	I-20 EB (Merge Analysis)	NE
6241	7	21.910389	I-20 EB (Merge Analysis)	NE
6241	8	23.2932	I-20 EB (Merge Analysis)	NE
6241	9	23.835595	I-20 EB (Merge Analysis)	NE
6241	10	22.953457	I-20 EB (Merge Analysis)	NE
6242	1	23.722347	I-20 EB (Merge Analysis)	NE
6242	2	23.508966	I-20 EB (Merge Analysis)	NE
6242	3	24.276664	I-20 EB (Merge Analysis)	NE
6242	4	23.140613	I-20 EB (Merge Analysis)	NE
6242	5	23.43148	I-20 EB (Merge Analysis)	NE
6242	6	24.534152	I-20 EB (Merge Analysis)	NE
6242	7	21.910389	I-20 EB (Merge Analysis)	NE
6242	8	23.2932	I-20 EB (Merge Analysis)	NE
6242	9	23.835595	I-20 EB (Merge Analysis)	NE
6242	10	22.953457	I-20 EB (Merge Analysis)	NE
6246	1	32.85504	I-20 WB (Merge Analysis)	SW
6246	2	44.709937	I-20 WB (Merge Analysis)	SW
6246	3	41.073474	I-20 WB (Merge Analysis)	SW
6246	4	34.633876	I-20 WB (Merge Analysis)	SW
6246	5	40.781008	I-20 WB (Merge Analysis)	SW
6246	6	39.601795	I-20 WB (Merge Analysis)	SW
6246	7	64.481454	I-20 WB (Merge Analysis)	SW
6246	8	43.06999	I-20 WB (Merge Analysis)	SW
6246	9	40.277539	I-20 WB (Merge Analysis)	SW
6246	10	35.773025	I-20 WB (Merge Analysis)	SW
6247	1	32.85504	I-20 WB (Merge Analysis)	SW
6247	2	44.709937	I-20 WB (Merge Analysis)	SW
6247	3	41.073474	I-20 WB (Merge Analysis)	SW
6247	4	34.633876	I-20 WB (Merge Analysis)	SW
6247	5	40.781008	I-20 WB (Merge Analysis)	SW
6247	6	39.601795	I-20 WB (Merge Analysis)	SW
6247	7	64.481454	I-20 WB (Merge Analysis)	SW
6247	8	43.06999	I-20 WB (Merge Analysis)	SW
6247	9	40.277539	I-20 WB (Merge Analysis)	SW
6247	10	35.773025	I-20 WB (Merge Analysis)	SW

Existing PM

ID	Run	Density	Name (Type)	Direction
6249	1	36.801592	I-20 WB (Diverge Analysis)	SW
6249	2	63.520341	I-20 WB (Diverge Analysis)	SW
6249	3	52.326743	I-20 WB (Diverge Analysis)	SW
6249	4	38.968347	I-20 WB (Diverge Analysis)	SW
6249	5	52.803899	I-20 WB (Diverge Analysis)	SW
6249	6	56.345409	I-20 WB (Diverge Analysis)	SW
6249	7	83.549137	I-20 WB (Diverge Analysis)	SW
6249	8	60.526386	I-20 WB (Diverge Analysis)	SW
6249	9	49.598744	I-20 WB (Diverge Analysis)	SW
6249	10	41.43039	I-20 WB (Diverge Analysis)	SW
6251	1	31.419229	I-20 WB (Basic Analysis)	SW
6251	2	32.292261	I-20 WB (Basic Analysis)	SW
6251	3	31.067781	I-20 WB (Basic Analysis)	SW
6251	4	31.529755	I-20 WB (Basic Analysis)	SW
6251	5	32.113433	I-20 WB (Basic Analysis)	SW
6251	6	30.599597	I-20 WB (Basic Analysis)	SW
6251	7	33.273336	I-20 WB (Basic Analysis)	SW
6251	8	32.266182	I-20 WB (Basic Analysis)	SW
6251	9	31.668844	I-20 WB (Basic Analysis)	SW
6251	10	31.591848	I-20 WB (Basic Analysis)	SW
6254	1	24.700167	I-20 EB (Basic Analysis)	NE
6254	2	23.429314	I-20 EB (Basic Analysis)	NE
6254	3	23.716321	I-20 EB (Basic Analysis)	NE
6254	4	24.270283	I-20 EB (Basic Analysis)	NE
6254	5	23.543365	I-20 EB (Basic Analysis)	NE
6254	6	24.354254	I-20 EB (Basic Analysis)	NE
6254	7	23.926877	I-20 EB (Basic Analysis)	NE
6254	8	24.69014	I-20 EB (Basic Analysis)	NE
6254	9	24.029648	I-20 EB (Basic Analysis)	NE
6254	10	23.915597	I-20 EB (Basic Analysis)	NE
6258	1	21.699192	I-20 EB (Merge Analysis)	E
6258	2	20.942487	I-20 EB (Merge Analysis)	E
6258	3	23.742298	I-20 EB (Merge Analysis)	E
6258	4	21.90272	I-20 EB (Merge Analysis)	E
6258	5	23.682284	I-20 EB (Merge Analysis)	E
6258	6	23.943217	I-20 EB (Merge Analysis)	E
6258	7	22.87861	I-20 EB (Merge Analysis)	E
6258	8	21.049469	I-20 EB (Merge Analysis)	E
6258	9	21.12514	I-20 EB (Merge Analysis)	E
6258	10	23.209995	I-20 EB (Merge Analysis)	E
6259	1	27.131434	I-20 EB (Basic Analysis)	E
6259	2	27.122314	I-20 EB (Basic Analysis)	E
6259	3	26.84112	I-20 EB (Basic Analysis)	E
6259	4	25.536987	I-20 EB (Basic Analysis)	E
6259	5	25.672264	I-20 EB (Basic Analysis)	E
6259	6	26.781841	I-20 EB (Basic Analysis)	E
6259	7	25.837941	I-20 EB (Basic Analysis)	E
6259	8	26.34561	I-20 EB (Basic Analysis)	E
6259	9	27.607184	I-20 EB (Basic Analysis)	E
6259	10	25.41387	I-20 EB (Basic Analysis)	E
8539	1	26.918333	I-20 WB (Basic Analysis)	SW
8539	2	25.761779	I-20 WB (Basic Analysis)	SW
8539	3	26.303629	I-20 WB (Basic Analysis)	SW
8539	4	26.418601	I-20 WB (Basic Analysis)	SW
8539	5	26.533574	I-20 WB (Basic Analysis)	SW
8539	6	27.038997	I-20 WB (Basic Analysis)	SW
8539	7	25.988309	I-20 WB (Basic Analysis)	SW

Existing PM

ID	Run	Density	Name (Type)	Direction
8539	8	27.266665	I-20 WB (Basic Analysis)	SW
8539	9	26.886459	I-20 WB (Basic Analysis)	SW
8539	10	26.853447	I-20 WB (Basic Analysis)	SW
8542	1	19.657181	I-20 EB (Basic Analysis)	NE
8542	2	18.793294	I-20 EB (Basic Analysis)	NE
8542	3	19.225536	I-20 EB (Basic Analysis)	NE
8542	4	18.52785	I-20 EB (Basic Analysis)	NE
8542	5	18.850089	I-20 EB (Basic Analysis)	NE
8542	6	19.138848	I-20 EB (Basic Analysis)	NE
8542	7	18.513501	I-20 EB (Basic Analysis)	NE
8542	8	18.453717	I-20 EB (Basic Analysis)	NE
8542	9	18.606765	I-20 EB (Basic Analysis)	NE
8542	10	17.506728	I-20 EB (Basic Analysis)	NE
8543	1	21.841594	I-20 EB (Diverge Analysis)	NE
8543	2	23.311193	I-20 EB (Diverge Analysis)	NE
8543	3	23.00906	I-20 EB (Diverge Analysis)	NE
8543	4	23.915459	I-20 EB (Diverge Analysis)	NE
8543	5	23.94186	I-20 EB (Diverge Analysis)	NE
8543	6	23.014926	I-20 EB (Diverge Analysis)	NE
8543	7	22.46346	I-20 EB (Diverge Analysis)	NE
8543	8	22.627727	I-20 EB (Diverge Analysis)	NE
8543	9	22.92986	I-20 EB (Diverge Analysis)	NE
8543	10	21.87386	I-20 EB (Diverge Analysis)	NE
8551	1	40.101588	I-26 WB (Diverge Analysis)	NW
8551	2	40.606121	I-26 WB (Diverge Analysis)	NW
8551	3	42.058121	I-26 WB (Diverge Analysis)	NW
8551	4	42.395454	I-26 WB (Diverge Analysis)	NW
8551	5	40.770388	I-26 WB (Diverge Analysis)	NW
8551	6	54.621584	I-26 WB (Diverge Analysis)	NW
8551	7	50.051451	I-26 WB (Diverge Analysis)	NW
8551	8	41.964254	I-26 WB (Diverge Analysis)	NW
8551	9	41.993588	I-26 WB (Diverge Analysis)	NW
8551	10	41.609321	I-26 WB (Diverge Analysis)	NW
8552	1	40.971729	I-26 EB (Basic Analysis)	SE
8552	2	40.50022	I-26 EB (Basic Analysis)	SE
8552	3	39.605036	I-26 EB (Basic Analysis)	SE
8552	4	40.110712	I-26 EB (Basic Analysis)	SE
8552	5	39.622974	I-26 EB (Basic Analysis)	SE
8552	6	39.839082	I-26 EB (Basic Analysis)	SE
8552	7	40.519866	I-26 EB (Basic Analysis)	SE
8552	8	40.738537	I-26 EB (Basic Analysis)	SE
8552	9	40.984542	I-26 EB (Basic Analysis)	SE
8552	10	40.850435	I-26 EB (Basic Analysis)	SE
8553	1	93.786112	I-26 EB (Basic Analysis)	S
8553	2	95.623174	I-26 EB (Basic Analysis)	S
8553	3	96.823746	I-26 EB (Basic Analysis)	S
8553	4	97.135255	I-26 EB (Basic Analysis)	S
8553	5	93.333161	I-26 EB (Basic Analysis)	S
8553	6	93.49481	I-26 EB (Basic Analysis)	S
8553	7	97.704391	I-26 EB (Basic Analysis)	S
8553	8	93.375257	I-26 EB (Basic Analysis)	S
8553	9	89.899826	I-26 EB (Basic Analysis)	S
8553	10	94.885655	I-26 EB (Basic Analysis)	S
8554	1	20.776819	I-26 WB (Basic Analysis)	N
8554	2	44.249949	I-26 WB (Basic Analysis)	N
8554	3	42.902689	I-26 WB (Basic Analysis)	N
8554	4	53.463985	I-26 WB (Basic Analysis)	N

Existing PM

ID	Run	Density	Name (Type)	Direction
8554	5	36.048149	I-26 WB (Basic Analysis)	N
8554	6	37.334494	I-26 WB (Basic Analysis)	N
8554	7	40.684728	I-26 WB (Basic Analysis)	N
8554	8	39.808651	I-26 WB (Basic Analysis)	N
8554	9	46.003894	I-26 WB (Basic Analysis)	N
8554	10	54.890074	I-26 WB (Basic Analysis)	N
8559	1	25.170926	I-126 NB (Diverge Analysis)	W
8559	2	27.805058	I-126 NB (Diverge Analysis)	W
8559	3	26.388259	I-126 NB (Diverge Analysis)	W
8559	4	26.948525	I-126 NB (Diverge Analysis)	W
8559	5	27.453058	I-126 NB (Diverge Analysis)	W
8559	6	26.109592	I-126 NB (Diverge Analysis)	W
8559	7	27.367992	I-126 NB (Diverge Analysis)	W
8559	8	26.326659	I-126 NB (Diverge Analysis)	W
8559	9	27.796258	I-126 NB (Diverge Analysis)	W
8559	10	28.547191	I-126 NB (Diverge Analysis)	W
8560	1	13.611623	I-126 SB (Basic Analysis)	E
8560	2	13.497311	I-126 SB (Basic Analysis)	E
8560	3	13.388501	I-126 SB (Basic Analysis)	E
8560	4	13.229566	I-126 SB (Basic Analysis)	E
8560	5	13.016836	I-126 SB (Basic Analysis)	E
8560	6	12.933089	I-126 SB (Basic Analysis)	E
8560	7	13.445963	I-126 SB (Basic Analysis)	E
8560	8	12.716692	I-126 SB (Basic Analysis)	E
8560	9	13.384222	I-126 SB (Basic Analysis)	E
8560	10	12.936757	I-126 SB (Basic Analysis)	E
8658	1	40.38014	I-20 WB (Basic Analysis)	SW
8658	2	64.204071	I-20 WB (Basic Analysis)	SW
8658	3	55.246767	I-20 WB (Basic Analysis)	SW
8658	4	43.675127	I-20 WB (Basic Analysis)	SW
8658	5	61.536327	I-20 WB (Basic Analysis)	SW
8658	6	50.624439	I-20 WB (Basic Analysis)	SW
8658	7	82.136675	I-20 WB (Basic Analysis)	SW
8658	8	64.401736	I-20 WB (Basic Analysis)	SW
8658	9	60.012482	I-20 WB (Basic Analysis)	SW
8658	10	45.306947	I-20 WB (Basic Analysis)	SW
8659	1	27.284198	I-20 EB (Basic Analysis)	NE
8659	2	26.279739	I-20 EB (Basic Analysis)	NE
8659	3	26.829466	I-20 EB (Basic Analysis)	NE
8659	4	26.147502	I-20 EB (Basic Analysis)	NE
8659	5	26.345588	I-20 EB (Basic Analysis)	NE
8659	6	27.178679	I-20 EB (Basic Analysis)	NE
8659	7	26.539085	I-20 EB (Basic Analysis)	NE
8659	8	26.438963	I-20 EB (Basic Analysis)	NE
8659	9	26.984102	I-20 EB (Basic Analysis)	NE
8659	10	26.309695	I-20 EB (Basic Analysis)	NE
8763	1	27.208167	I-26 EB (Basic Analysis)	SE
8763	2	26.896101	I-26 EB (Basic Analysis)	SE
8763	3	27.627656	I-26 EB (Basic Analysis)	SE
8763	4	26.903913	I-26 EB (Basic Analysis)	SE
8763	5	27.485077	I-26 EB (Basic Analysis)	SE
8763	6	26.811899	I-26 EB (Basic Analysis)	SE
8763	7	27.781302	I-26 EB (Basic Analysis)	SE
8763	8	27.977266	I-26 EB (Basic Analysis)	SE
8763	9	27.224009	I-26 EB (Basic Analysis)	SE
8763	10	27.234643	I-26 EB (Basic Analysis)	SE
8764	1	34.343185	I-20 WB (Basic Analysis)	S

Existing PM

ID	Run	Density	Name (Type)	Direction
8764	2	31.908932	I-20 WB (Basic Analysis)	S
8764	3	32.83189	I-20 WB (Basic Analysis)	S
8764	4	31.645274	I-20 WB (Basic Analysis)	S
8764	5	33.31308	I-20 WB (Basic Analysis)	S
8764	6	34.619752	I-20 WB (Basic Analysis)	S
8764	7	32.752166	I-20 WB (Basic Analysis)	S
8764	8	34.492634	I-20 WB (Basic Analysis)	S
8764	9	34.227621	I-20 WB (Basic Analysis)	S
8764	10	33.223562	I-20 WB (Basic Analysis)	S
8765	1	21.061298	I-20 EB (Basic Analysis)	NE
8765	2	20.293476	I-20 EB (Basic Analysis)	NE
8765	3	21.593464	I-20 EB (Basic Analysis)	NE
8765	4	20.873201	I-20 EB (Basic Analysis)	NE
8765	5	21.235293	I-20 EB (Basic Analysis)	NE
8765	6	21.552997	I-20 EB (Basic Analysis)	NE
8765	7	20.866546	I-20 EB (Basic Analysis)	NE
8765	8	20.96225	I-20 EB (Basic Analysis)	NE
8765	9	20.416161	I-20 EB (Basic Analysis)	NE
8765	10	20.60993	I-20 EB (Basic Analysis)	NE
8770	1	32.554123	I-20 WB (Diverge Analysis)	SW
8770	2	34.006123	I-20 WB (Diverge Analysis)	SW
8770	3	34.287723	I-20 WB (Diverge Analysis)	SW
8770	4	34.850923	I-20 WB (Diverge Analysis)	SW
8770	5	34.006123	I-20 WB (Diverge Analysis)	SW
8770	6	33.041057	I-20 WB (Diverge Analysis)	SW
8770	7	32.686123	I-20 WB (Diverge Analysis)	SW
8770	8	35.637056	I-20 WB (Diverge Analysis)	SW
8770	9	36.414389	I-20 WB (Diverge Analysis)	SW
8770	10	34.528256	I-20 WB (Diverge Analysis)	SW
8773	1	22.492306	I-26 WB (Basic Analysis)	N
8773	2	22.956414	I-26 WB (Basic Analysis)	N
8773	3	22.894533	I-26 WB (Basic Analysis)	N
8773	4	22.959361	I-26 WB (Basic Analysis)	N
8773	5	22.91516	I-26 WB (Basic Analysis)	N
8773	6	23.464724	I-26 WB (Basic Analysis)	N
8773	7	23.799176	I-26 WB (Basic Analysis)	N
8773	8	23.939145	I-26 WB (Basic Analysis)	N
8773	9	24.21761	I-26 WB (Basic Analysis)	N
8773	10	23.164158	I-26 WB (Basic Analysis)	N
8774	1	25.584588	I-20 EB (Diverge Analysis)	NE
8774	2	24.756784	I-20 EB (Diverge Analysis)	NE
8774	3	26.552746	I-20 EB (Diverge Analysis)	NE
8774	4	23.685508	I-20 EB (Diverge Analysis)	NE
8774	5	24.175316	I-20 EB (Diverge Analysis)	NE
8774	6	25.630418	I-20 EB (Diverge Analysis)	NE
8774	7	23.221479	I-20 EB (Diverge Analysis)	NE
8774	8	23.482137	I-20 EB (Diverge Analysis)	NE
8774	9	25.160661	I-20 EB (Diverge Analysis)	NE
8774	10	25.593181	I-20 EB (Diverge Analysis)	NE
8783	1	35.688291	I-26 WB (Basic Analysis)	NW
8783	2	36.131981	I-26 WB (Basic Analysis)	NW
8783	3	36.098618	I-26 WB (Basic Analysis)	NW
8783	4	36.206941	I-26 WB (Basic Analysis)	NW
8783	5	35.911003	I-26 WB (Basic Analysis)	NW
8783	6	36.504613	I-26 WB (Basic Analysis)	NW
8783	7	36.261319	I-26 WB (Basic Analysis)	NW
8783	8	36.153863	I-26 WB (Basic Analysis)	NW

Existing PM

ID	Run	Density	Name (Type)	Direction
8783	9	35.888472	I-26 WB (Basic Analysis)	NW
8783	10	36.021276	I-26 WB (Basic Analysis)	NW
8784	1	29.496862	I-26 EB (Basic Analysis)	SE
8784	2	33.126085	I-26 EB (Basic Analysis)	SE
8784	3	36.399924	I-26 EB (Basic Analysis)	SE
8784	4	26.750714	I-26 EB (Basic Analysis)	SE
8784	5	34.68762	I-26 EB (Basic Analysis)	SE
8784	6	32.953778	I-26 EB (Basic Analysis)	SE
8784	7	31.15532	I-26 EB (Basic Analysis)	SE
8784	8	33.287623	I-26 EB (Basic Analysis)	SE
8784	9	33.621469	I-26 EB (Basic Analysis)	SE
8784	10	34.267621	I-26 EB (Basic Analysis)	SE
8817	1	51.836182	I-26 WB (Basic Analysis)	NW
8817	2	51.583401	I-26 WB (Basic Analysis)	NW
8817	3	51.04584	I-26 WB (Basic Analysis)	NW
8817	4	51.282622	I-26 WB (Basic Analysis)	NW
8817	5	52.255351	I-26 WB (Basic Analysis)	NW
8817	6	52.14016	I-26 WB (Basic Analysis)	NW
8817	7	52.610525	I-26 WB (Basic Analysis)	NW
8817	8	51.330619	I-26 WB (Basic Analysis)	NW
8817	9	51.692193	I-26 WB (Basic Analysis)	NW
8817	10	51.32102	I-26 WB (Basic Analysis)	NW

No Build AM

ID	Run	Density	Name (Type)	Direction
2466	1	38.389827	I-20 EB (Weaving Analysis)	E
2466	2	34.459731	I-20 EB (Weaving Analysis)	E
2466	3	39.613732	I-20 EB (Weaving Analysis)	E
2466	4	38.548481	I-20 EB (Weaving Analysis)	E
2466	5	34.940228	I-20 EB (Weaving Analysis)	E
2466	6	39.042577	I-20 EB (Weaving Analysis)	E
2466	7	35.624708	I-20 EB (Weaving Analysis)	E
2466	8	36.037209	I-20 EB (Weaving Analysis)	E
2466	9	38.734334	I-20 EB (Weaving Analysis)	E
2466	10	36.812349	I-20 EB (Weaving Analysis)	E
2467	1	25.95285	I-20 WB (Weaving Analysis)	W
2467	2	26.193002	I-20 WB (Weaving Analysis)	W
2467	3	26.531399	I-20 WB (Weaving Analysis)	W
2467	4	25.396133	I-20 WB (Weaving Analysis)	W
2467	5	26.214834	I-20 WB (Weaving Analysis)	W
2467	6	25.860063	I-20 WB (Weaving Analysis)	W
2467	7	31.476358	I-20 WB (Weaving Analysis)	W
2467	8	26.460445	I-20 WB (Weaving Analysis)	W
2467	9	27.224567	I-20 WB (Weaving Analysis)	W
2467	10	24.964949	I-20 WB (Weaving Analysis)	W
2806	1	66.363772	I-20 EB (Basic Analysis)	NE
2806	2	55.198165	I-20 EB (Basic Analysis)	NE
2806	3	66.658498	I-20 EB (Basic Analysis)	NE
2806	4	62.684211	I-20 EB (Basic Analysis)	NE
2806	5	61.632874	I-20 EB (Basic Analysis)	NE
2806	6	57.478226	I-20 EB (Basic Analysis)	NE
2806	7	55.129925	I-20 EB (Basic Analysis)	NE
2806	8	69.131416	I-20 EB (Basic Analysis)	NE
2806	9	60.147247	I-20 EB (Basic Analysis)	NE
2806	10	63.032819	I-20 EB (Basic Analysis)	NE
2807	1	66.363772	I-20 EB (Basic Analysis)	NE
2807	2	55.198165	I-20 EB (Basic Analysis)	NE
2807	3	66.658498	I-20 EB (Basic Analysis)	NE
2807	4	62.684211	I-20 EB (Basic Analysis)	NE
2807	5	61.632874	I-20 EB (Basic Analysis)	NE
2807	6	57.478226	I-20 EB (Basic Analysis)	NE
2807	7	55.129925	I-20 EB (Basic Analysis)	NE
2807	8	69.131416	I-20 EB (Basic Analysis)	NE
2807	9	60.147247	I-20 EB (Basic Analysis)	NE
2807	10	63.032819	I-20 EB (Basic Analysis)	NE
2808	1	71.963066	I-20 EB (Diverge Analysis)	NE
2808	2	66.582323	I-20 EB (Diverge Analysis)	NE
2808	3	71.861925	I-20 EB (Diverge Analysis)	NE
2808	4	72.130287	I-20 EB (Diverge Analysis)	NE
2808	5	75.365477	I-20 EB (Diverge Analysis)	NE
2808	6	71.039304	I-20 EB (Diverge Analysis)	NE
2808	7	68.775077	I-20 EB (Diverge Analysis)	NE
2808	8	75.47471	I-20 EB (Diverge Analysis)	NE
2808	9	71.949581	I-20 EB (Diverge Analysis)	NE
2808	10	74.753232	I-20 EB (Diverge Analysis)	NE
2813	1	11.87153	I-20 WB (Merge Analysis)	S
2813	2	11.048158	I-20 WB (Merge Analysis)	S
2813	3	11.232793	I-20 WB (Merge Analysis)	S
2813	4	11.283942	I-20 WB (Merge Analysis)	S
2813	5	12.729833	I-20 WB (Merge Analysis)	S
2813	6	11.809153	I-20 WB (Merge Analysis)	S
2813	7	11.020712	I-20 WB (Merge Analysis)	S
2813	8	11.781708	I-20 WB (Merge Analysis)	S
2813	9	11.981313	I-20 WB (Merge Analysis)	S
2813	10	11.4823	I-20 WB (Merge Analysis)	S
2814	1	14.428174	I-20 WB (Basic Analysis)	S
2814	2	13.859158	I-20 WB (Basic Analysis)	S
2814	3	14.150978	I-20 WB (Basic Analysis)	S
2814	4	13.47664	I-20 WB (Basic Analysis)	S

No Build AM

ID	Run	Density	Name (Type)	Direction
2814	5	14.766198	I-20 WB (Basic Analysis)	S
2814	6	14.851557	I-20 WB (Basic Analysis)	S
2814	7	14.26055	I-20 WB (Basic Analysis)	S
2814	8	13.773373	I-20 WB (Basic Analysis)	S
2814	9	14.163176	I-20 WB (Basic Analysis)	S
2814	10	14.256332	I-20 WB (Basic Analysis)	S
2815	1	14.428174	I-20 WB (Basic Analysis)	S
2815	2	13.859158	I-20 WB (Basic Analysis)	S
2815	3	14.150978	I-20 WB (Basic Analysis)	S
2815	4	13.47664	I-20 WB (Basic Analysis)	S
2815	5	14.766198	I-20 WB (Basic Analysis)	S
2815	6	14.851557	I-20 WB (Basic Analysis)	S
2815	7	14.26055	I-20 WB (Basic Analysis)	S
2815	8	13.773373	I-20 WB (Basic Analysis)	S
2815	9	14.163176	I-20 WB (Basic Analysis)	S
2815	10	14.256332	I-20 WB (Basic Analysis)	S
2822	1	10.539474	I-20 WB (Merge Analysis)	SW
2822	2	9.712226	I-20 WB (Merge Analysis)	SW
2822	3	9.499924	I-20 WB (Merge Analysis)	SW
2822	4	9.058237	I-20 WB (Merge Analysis)	SW
2822	5	9.241257	I-20 WB (Merge Analysis)	SW
2822	6	9.636578	I-20 WB (Merge Analysis)	SW
2822	7	8.719041	I-20 WB (Merge Analysis)	SW
2822	8	10.295448	I-20 WB (Merge Analysis)	SW
2822	9	10.234442	I-20 WB (Merge Analysis)	SW
2822	10	9.172929	I-20 WB (Merge Analysis)	SW
2823	1	349.887817	I-20 WB (Basic Analysis)	SW
2823	2	1049.663452	I-20 WB (Basic Analysis)	SW
2823	3	1399.551261	I-20 WB (Basic Analysis)	SW
2823	4	1749.439079	I-20 WB (Basic Analysis)	SW
2823	5	1072.989307	I-20 WB (Basic Analysis)	SW
2823	6	699.775635	I-20 WB (Basic Analysis)	SW
2823	7	816.404907	I-20 WB (Basic Analysis)	SW
2823	8	2530.8552	I-20 WB (Basic Analysis)	SW
2823	9	956.360034	I-20 WB (Basic Analysis)	SW
2823	10	933.034172	I-20 WB (Basic Analysis)	SW
2826	1	111.953085	I-20 EB (Basic Analysis)	NE
2826	2	101.798641	I-20 EB (Basic Analysis)	NE
2826	3	107.645305	I-20 EB (Basic Analysis)	NE
2826	4	117.392477	I-20 EB (Basic Analysis)	NE
2826	5	114.044107	I-20 EB (Basic Analysis)	NE
2826	6	111.548548	I-20 EB (Basic Analysis)	NE
2826	7	100.426493	I-20 EB (Basic Analysis)	NE
2826	8	114.618114	I-20 EB (Basic Analysis)	NE
2826	9	113.2897	I-20 EB (Basic Analysis)	NE
2826	10	115.358856	I-20 EB (Basic Analysis)	NE
2829	1	108.731235	I-20 EB (Merge Analysis)	NE
2829	2	102.547632	I-20 EB (Merge Analysis)	NE
2829	3	104.7171	I-20 EB (Merge Analysis)	NE
2829	4	116.030563	I-20 EB (Merge Analysis)	NE
2829	5	109.35852	I-20 EB (Merge Analysis)	NE
2829	6	111.937088	I-20 EB (Merge Analysis)	NE
2829	7	104.275768	I-20 EB (Merge Analysis)	NE
2829	8	110.99244	I-20 EB (Merge Analysis)	NE
2829	9	107.781628	I-20 EB (Merge Analysis)	NE
2829	10	110.171761	I-20 EB (Merge Analysis)	NE
2830	1	94.084559	I-20 EB (Basic Analysis)	NE
2830	2	98.082824	I-20 EB (Basic Analysis)	NE
2830	3	101.68522	I-20 EB (Basic Analysis)	NE
2830	4	110.209572	I-20 EB (Basic Analysis)	NE
2830	5	103.690949	I-20 EB (Basic Analysis)	NE
2830	6	98.267563	I-20 EB (Basic Analysis)	NE
2830	7	104.799379	I-20 EB (Basic Analysis)	NE
2830	8	106.989847	I-20 EB (Basic Analysis)	NE

No Build AM

ID	Run	Density	Name (Type)	Direction
2830	9	103.347864	I-20 EB (Basic Analysis)	NE
2830	10	106.71274	I-20 EB (Basic Analysis)	NE
2831	1	13.369934	I-20 WB (Basic Analysis)	SW
2831	2	13.163726	I-20 WB (Basic Analysis)	SW
2831	3	12.601135	I-20 WB (Basic Analysis)	SW
2831	4	10.642154	I-20 WB (Basic Analysis)	SW
2831	5	14.864946	I-20 WB (Basic Analysis)	SW
2831	6	13.880973	I-20 WB (Basic Analysis)	SW
2831	7	13.468556	I-20 WB (Basic Analysis)	SW
2831	8	12.157338	I-20 WB (Basic Analysis)	SW
2831	9	14.463736	I-20 WB (Basic Analysis)	SW
2831	10	13.98856	I-20 WB (Basic Analysis)	SW
2837	1	12.929771	I-20 WB (Merge Analysis)	SW
2837	2	13.916088	I-20 WB (Merge Analysis)	SW
2837	3	14.221496	I-20 WB (Merge Analysis)	SW
2837	4	14.659581	I-20 WB (Merge Analysis)	SW
2837	5	13.548096	I-20 WB (Merge Analysis)	SW
2837	6	14.817292	I-20 WB (Merge Analysis)	SW
2837	7	15.10768	I-20 WB (Merge Analysis)	SW
2837	8	14.221496	I-20 WB (Merge Analysis)	SW
2837	9	14.203972	I-20 WB (Merge Analysis)	SW
2837	10	13.911081	I-20 WB (Merge Analysis)	SW
2838	1	23.465666	I-20 WB (Basic Analysis)	SW
2838	2	23.641795	I-20 WB (Basic Analysis)	SW
2838	3	24.300761	I-20 WB (Basic Analysis)	SW
2838	4	22.198346	I-20 WB (Basic Analysis)	SW
2838	5	23.878659	I-20 WB (Basic Analysis)	SW
2838	6	33.933204	I-20 WB (Basic Analysis)	SW
2838	7	24.11451	I-20 WB (Basic Analysis)	SW
2838	8	22.561739	I-20 WB (Basic Analysis)	SW
2838	9	23.427201	I-20 WB (Basic Analysis)	SW
2838	10	23.841206	I-20 WB (Basic Analysis)	SW
2839	1	25.996783	I-20 WB (Diverge Analysis)	SW
2839	2	24.655339	I-20 WB (Diverge Analysis)	SW
2839	3	27.171808	I-20 WB (Diverge Analysis)	SW
2839	4	24.700726	I-20 WB (Diverge Analysis)	SW
2839	5	25.542911	I-20 WB (Diverge Analysis)	SW
2839	6	66.076208	I-20 WB (Diverge Analysis)	SW
2839	7	26.770887	I-20 WB (Diverge Analysis)	SW
2839	8	22.907932	I-20 WB (Diverge Analysis)	SW
2839	9	25.313454	I-20 WB (Diverge Analysis)	SW
2839	10	25.192421	I-20 WB (Diverge Analysis)	SW
2840	1	25.996783	I-20 WB (Diverge Analysis)	SW
2840	2	24.655339	I-20 WB (Diverge Analysis)	SW
2840	3	27.171808	I-20 WB (Diverge Analysis)	SW
2840	4	24.700726	I-20 WB (Diverge Analysis)	SW
2840	5	25.542911	I-20 WB (Diverge Analysis)	SW
2840	6	66.076208	I-20 WB (Diverge Analysis)	SW
2840	7	26.770887	I-20 WB (Diverge Analysis)	SW
2840	8	22.907932	I-20 WB (Diverge Analysis)	SW
2840	9	25.313454	I-20 WB (Diverge Analysis)	SW
2840	10	25.192421	I-20 WB (Diverge Analysis)	SW
2843	1	74.42365	I-20 EB (Merge Analysis)	NE
2843	2	72.195683	I-20 EB (Merge Analysis)	NE
2843	3	74.030792	I-20 EB (Merge Analysis)	NE
2843	4	75.809272	I-20 EB (Merge Analysis)	NE
2843	5	72.241693	I-20 EB (Merge Analysis)	NE
2843	6	75.404026	I-20 EB (Merge Analysis)	NE
2843	7	72.204532	I-20 EB (Merge Analysis)	NE
2843	8	79.261824	I-20 EB (Merge Analysis)	NE
2843	9	75.630539	I-20 EB (Merge Analysis)	NE
2843	10	77.681543	I-20 EB (Merge Analysis)	NE
2844	1	74.42365	I-20 EB (Merge Analysis)	NE
2844	2	72.195683	I-20 EB (Merge Analysis)	NE

No Build AM

ID	Run	Density	Name (Type)	Direction
2844	3	74.030792	I-20 EB (Merge Analysis)	NE
2844	4	75.809272	I-20 EB (Merge Analysis)	NE
2844	5	72.241693	I-20 EB (Merge Analysis)	NE
2844	6	75.404026	I-20 EB (Merge Analysis)	NE
2844	7	72.204532	I-20 EB (Merge Analysis)	NE
2844	8	79.261824	I-20 EB (Merge Analysis)	NE
2844	9	75.630539	I-20 EB (Merge Analysis)	NE
2844	10	77.681543	I-20 EB (Merge Analysis)	NE
2848	1	32.076522	I-20 EB (Basic Analysis)	NE
2848	2	31.353268	I-20 EB (Basic Analysis)	NE
2848	3	33.126756	I-20 EB (Basic Analysis)	NE
2848	4	32.379682	I-20 EB (Basic Analysis)	NE
2848	5	31.704068	I-20 EB (Basic Analysis)	NE
2848	6	30.85955	I-20 EB (Basic Analysis)	NE
2848	7	30.134131	I-20 EB (Basic Analysis)	NE
2848	8	30.950498	I-20 EB (Basic Analysis)	NE
2848	9	32.340704	I-20 EB (Basic Analysis)	NE
2848	10	30.772933	I-20 EB (Basic Analysis)	NE
2852	1	17.799245	I-20 WB (Basic Analysis)	SW
2852	2	17.84396	I-20 WB (Basic Analysis)	SW
2852	3	18.360974	I-20 WB (Basic Analysis)	SW
2852	4	15.914241	I-20 WB (Basic Analysis)	SW
2852	5	16.737271	I-20 WB (Basic Analysis)	SW
2852	6	18.504899	I-20 WB (Basic Analysis)	SW
2852	7	17.890072	I-20 WB (Basic Analysis)	SW
2852	8	16.284535	I-20 WB (Basic Analysis)	SW
2852	9	18.496515	I-20 WB (Basic Analysis)	SW
2852	10	19.628356	I-20 WB (Basic Analysis)	SW
2856	1	24.714147	I-20 EB (Basic Analysis)	NE
2856	2	24.56392	I-20 EB (Basic Analysis)	NE
2856	3	24.710295	I-20 EB (Basic Analysis)	NE
2856	4	24.026573	I-20 EB (Basic Analysis)	NE
2856	5	24.910597	I-20 EB (Basic Analysis)	NE
2856	6	24.226874	I-20 EB (Basic Analysis)	NE
2856	7	23.853235	I-20 EB (Basic Analysis)	NE
2856	8	23.304331	I-20 EB (Basic Analysis)	NE
2856	9	24.369397	I-20 EB (Basic Analysis)	NE
2856	10	23.743454	I-20 EB (Basic Analysis)	NE
2859	1	36.570974	I-20 WB (Weaving Analysis)	SW
2859	2	60.991125	I-20 WB (Weaving Analysis)	SW
2859	3	65.913246	I-20 WB (Weaving Analysis)	SW
2859	4	46.749564	I-20 WB (Weaving Analysis)	SW
2859	5	32.440287	I-20 WB (Weaving Analysis)	SW
2859	6	42.838954	I-20 WB (Weaving Analysis)	SW
2859	7	71.355934	I-20 WB (Weaving Analysis)	SW
2859	8	36.763542	I-20 WB (Weaving Analysis)	SW
2859	9	36.953994	I-20 WB (Weaving Analysis)	SW
2859	10	65.054096	I-20 WB (Weaving Analysis)	SW
2863	1	20.840271	I-20 EB (Merge Analysis)	E
2863	2	20.481762	I-20 EB (Merge Analysis)	E
2863	3	21.097462	I-20 EB (Merge Analysis)	E
2863	4	20.926001	I-20 EB (Merge Analysis)	E
2863	5	20.770128	I-20 EB (Merge Analysis)	E
2863	6	20.91561	I-20 EB (Merge Analysis)	E
2863	7	20.577884	I-20 EB (Merge Analysis)	E
2863	8	20.375249	I-20 EB (Merge Analysis)	E
2863	9	21.016927	I-20 EB (Merge Analysis)	E
2863	10	20.481762	I-20 EB (Merge Analysis)	E
4563	1	20.163727	I-126 SB (Merge Analysis)	E
4563	2	17.494395	I-126 SB (Merge Analysis)	E
4563	3	19.776527	I-126 SB (Merge Analysis)	E
4563	4	18.072261	I-126 SB (Merge Analysis)	E
4563	5	17.523728	I-126 SB (Merge Analysis)	E
4563	6	19.732527	I-126 SB (Merge Analysis)	E

No Build AM

ID	Run	Density	Name (Type)	Direction
4563	7	18.741061	I-126 SB (Merge Analysis)	E
4563	8	18.359728	I-126 SB (Merge Analysis)	E
4563	9	17.875728	I-126 SB (Merge Analysis)	E
4563	10	17.907995	I-126 SB (Merge Analysis)	E
4566	1	16.083705	I-126 NB (Basic Analysis)	W
4566	2	15.780239	I-126 NB (Basic Analysis)	W
4566	3	14.472545	I-126 NB (Basic Analysis)	W
4566	4	15.348286	I-126 NB (Basic Analysis)	W
4566	5	15.084549	I-126 NB (Basic Analysis)	W
4566	6	16.108219	I-126 NB (Basic Analysis)	W
4566	7	14.787	I-126 NB (Basic Analysis)	W
4566	8	14.688945	I-126 NB (Basic Analysis)	W
4566	9	15.041439	I-126 NB (Basic Analysis)	W
4566	10	15.595116	I-126 NB (Basic Analysis)	W
4570	1	13.618078	I-126 NB (Basic Analysis)	NW
4570	2	13.243902	I-126 NB (Basic Analysis)	NW
4570	3	13.345192	I-126 NB (Basic Analysis)	NW
4570	4	14.154316	I-126 NB (Basic Analysis)	NW
4570	5	13.313017	I-126 NB (Basic Analysis)	NW
4570	6	13.664551	I-126 NB (Basic Analysis)	NW
4570	7	14.124525	I-126 NB (Basic Analysis)	NW
4570	8	12.811336	I-126 NB (Basic Analysis)	NW
4570	9	13.616886	I-126 NB (Basic Analysis)	NW
4570	10	13.216494	I-126 NB (Basic Analysis)	NW
4573	1	24.458434	I-126 SB (Basic Analysis)	E
4573	2	25.789434	I-126 SB (Basic Analysis)	E
4573	3	24.99555	I-126 SB (Basic Analysis)	E
4573	4	24.547516	I-126 SB (Basic Analysis)	E
4573	5	25.178956	I-126 SB (Basic Analysis)	E
4573	6	24.01302	I-126 SB (Basic Analysis)	E
4573	7	25.307339	I-126 SB (Basic Analysis)	E
4573	8	25.163235	I-126 SB (Basic Analysis)	E
4573	9	25.810394	I-126 SB (Basic Analysis)	E
4573	10	24.123064	I-126 SB (Basic Analysis)	E
4578	1	25.775746	I-126 SB (Basic Analysis)	E
4578	2	24.776863	I-126 SB (Basic Analysis)	E
4578	3	26.044481	I-126 SB (Basic Analysis)	E
4578	4	24.925596	I-126 SB (Basic Analysis)	E
4578	5	24.705031	I-126 SB (Basic Analysis)	E
4578	6	25.349826	I-126 SB (Basic Analysis)	E
4578	7	24.80813	I-126 SB (Basic Analysis)	E
4578	8	25.23405	I-126 SB (Basic Analysis)	E
4578	9	25.352361	I-126 SB (Basic Analysis)	E
4578	10	24.340802	I-126 SB (Basic Analysis)	E
4579	1	15.598355	I-126 SB (Diverge Analysis)	E
4579	2	15.63758	I-126 SB (Diverge Analysis)	E
4579	3	15.449301	I-126 SB (Diverge Analysis)	E
4579	4	16.615582	I-126 SB (Diverge Analysis)	E
4579	5	15.62189	I-126 SB (Diverge Analysis)	E
4579	6	13.872468	I-126 SB (Diverge Analysis)	E
4579	7	17.292862	I-126 SB (Diverge Analysis)	E
4579	8	16.550208	I-126 SB (Diverge Analysis)	E
4579	9	17.062744	I-126 SB (Diverge Analysis)	E
4579	10	14.842626	I-126 SB (Diverge Analysis)	E
4586	1	7.852129	I-126 NB (Merge Analysis)	NW
4586	2	8.729495	I-126 NB (Merge Analysis)	NW
4586	3	7.752027	I-126 NB (Merge Analysis)	NW
4586	4	8.18335	I-126 NB (Merge Analysis)	NW
4586	5	8.389442	I-126 NB (Merge Analysis)	NW
4586	6	9.16965	I-126 NB (Merge Analysis)	NW
4586	7	8.06411	I-126 NB (Merge Analysis)	NW
4586	8	8.826653	I-126 NB (Merge Analysis)	NW
4586	9	8.829597	I-126 NB (Merge Analysis)	NW
4586	10	8.305533	I-126 NB (Merge Analysis)	NW

No Build AM

ID	Run	Density	Name (Type)	Direction
4587	1	14.130164	I-126 NB (Basic Analysis)	NW
4587	2	14.455542	I-126 NB (Basic Analysis)	NW
4587	3	13.419886	I-126 NB (Basic Analysis)	NW
4587	4	12.233444	I-126 NB (Basic Analysis)	NW
4587	5	13.616304	I-126 NB (Basic Analysis)	NW
4587	6	13.17982	I-126 NB (Basic Analysis)	NW
4587	7	13.374254	I-126 NB (Basic Analysis)	NW
4587	8	12.465574	I-126 NB (Basic Analysis)	NW
4587	9	13.241325	I-126 NB (Basic Analysis)	NW
4587	10	14.116276	I-126 NB (Basic Analysis)	NW
4588	1	8.850614	I-126 NB (Diverge Analysis)	NW
4588	2	8.129912	I-126 NB (Diverge Analysis)	NW
4588	3	8.268921	I-126 NB (Diverge Analysis)	NW
4588	4	8.557657	I-126 NB (Diverge Analysis)	NW
4588	5	8.189503	I-126 NB (Diverge Analysis)	NW
4588	6	8.882248	I-126 NB (Diverge Analysis)	NW
4588	7	9.097921	I-126 NB (Diverge Analysis)	NW
4588	8	9.208068	I-126 NB (Diverge Analysis)	NW
4588	9	9.115463	I-126 NB (Diverge Analysis)	NW
4588	10	8.582381	I-126 NB (Diverge Analysis)	NW
4589	1	8.850614	I-126 NB (Diverge Analysis)	NW
4589	2	8.129912	I-126 NB (Diverge Analysis)	NW
4589	3	8.268921	I-126 NB (Diverge Analysis)	NW
4589	4	8.557657	I-126 NB (Diverge Analysis)	NW
4589	5	8.189503	I-126 NB (Diverge Analysis)	NW
4589	6	8.882248	I-126 NB (Diverge Analysis)	NW
4589	7	9.097921	I-126 NB (Diverge Analysis)	NW
4589	8	9.208068	I-126 NB (Diverge Analysis)	NW
4589	9	9.115463	I-126 NB (Diverge Analysis)	NW
4589	10	8.582381	I-126 NB (Diverge Analysis)	NW
4593	1	24.38467	I-126 SB (Merge Analysis)	SE
4593	2	24.138098	I-126 SB (Merge Analysis)	SE
4593	3	25.858911	I-126 SB (Merge Analysis)	SE
4593	4	25.360576	I-126 SB (Merge Analysis)	SE
4593	5	23.826639	I-126 SB (Merge Analysis)	SE
4593	6	24.581927	I-126 SB (Merge Analysis)	SE
4593	7	24.400243	I-126 SB (Merge Analysis)	SE
4593	8	24.068019	I-126 SB (Merge Analysis)	SE
4593	9	26.811457	I-126 SB (Merge Analysis)	SE
4593	10	24.132907	I-126 SB (Merge Analysis)	SE
4594	1	30.072893	I-126 SB (Basic Analysis)	SE
4594	2	29.612397	I-126 SB (Basic Analysis)	SE
4594	3	29.448158	I-126 SB (Basic Analysis)	SE
4594	4	29.42144	I-126 SB (Basic Analysis)	SE
4594	5	29.893723	I-126 SB (Basic Analysis)	SE
4594	6	29.271347	I-126 SB (Basic Analysis)	SE
4594	7	29.463089	I-126 SB (Basic Analysis)	SE
4594	8	29.638329	I-126 SB (Basic Analysis)	SE
4594	9	30.369936	I-126 SB (Basic Analysis)	SE
4594	10	29.385292	I-126 SB (Basic Analysis)	SE
4599	1	13.423229	I-126 NB (Basic Analysis)	NW
4599	2	13.905726	I-126 NB (Basic Analysis)	NW
4599	3	11.731638	I-126 NB (Basic Analysis)	NW
4599	4	13.920555	I-126 NB (Basic Analysis)	NW
4599	5	12.651006	I-126 NB (Basic Analysis)	NW
4599	6	13.278366	I-126 NB (Basic Analysis)	NW
4599	7	12.25862	I-126 NB (Basic Analysis)	NW
4599	8	13.130081	I-126 NB (Basic Analysis)	NW
4599	9	12.581426	I-126 NB (Basic Analysis)	NW
4599	10	13.136925	I-126 NB (Basic Analysis)	NW
4601	1	16.895433	I-126 NB (Basic Analysis)	NW
4601	2	16.283641	I-126 NB (Basic Analysis)	NW
4601	3	16.040098	I-126 NB (Basic Analysis)	NW
4601	4	14.322092	I-126 NB (Basic Analysis)	NW

No Build AM

ID	Run	Density	Name (Type)	Direction
4601	5	14.91041	I-126 NB (Basic Analysis)	NW
4601	6	16.117856	I-126 NB (Basic Analysis)	NW
4601	7	15.131946	I-126 NB (Basic Analysis)	NW
4601	8	14.6654	I-126 NB (Basic Analysis)	NW
4601	9	15.184763	I-126 NB (Basic Analysis)	NW
4601	10	15.6205	I-126 NB (Basic Analysis)	NW
4602	1	9.112716	WB EXPRESSWAY TO I-26 WB (Basic Anal	NW
4602	2	8.031546	WB EXPRESSWAY TO I-26 WB (Basic Anal	NW
4602	3	8.353323	WB EXPRESSWAY TO I-26 WB (Basic Anal	NW
4602	4	7.95432	WB EXPRESSWAY TO I-26 WB (Basic Anal	NW
4602	5	8.739455	WB EXPRESSWAY TO I-26 WB (Basic Anal	NW
4602	6	8.881037	WB EXPRESSWAY TO I-26 WB (Basic Anal	NW
4602	7	10.090917	WB EXPRESSWAY TO I-26 WB (Basic Anal	NW
4602	8	8.083031	WB EXPRESSWAY TO I-26 WB (Basic Anal	NW
4602	9	8.610744	WB EXPRESSWAY TO I-26 WB (Basic Anal	NW
4602	10	7.439477	WB EXPRESSWAY TO I-26 WB (Basic Anal	NW
4603	1	25.568531	I-126 NB (Basic Analysis)	NW
4603	2	24.66128	I-126 NB (Basic Analysis)	NW
4603	3	24.315562	I-126 NB (Basic Analysis)	NW
4603	4	24.221274	I-126 NB (Basic Analysis)	NW
4603	5	24.977666	I-126 NB (Basic Analysis)	NW
4603	6	25.352718	I-126 NB (Basic Analysis)	NW
4603	7	26.048346	I-126 NB (Basic Analysis)	NW
4603	8	23.219737	I-126 NB (Basic Analysis)	NW
4603	9	24.711566	I-126 NB (Basic Analysis)	NW
4603	10	24.254799	I-126 NB (Basic Analysis)	NW
4609	1	30.614384	I-126 SB (Basic Analysis)	SE
4609	2	30.328841	I-126 SB (Basic Analysis)	SE
4609	3	30.366599	I-126 SB (Basic Analysis)	SE
4609	4	29.151274	I-126 SB (Basic Analysis)	SE
4609	5	30.446834	I-126 SB (Basic Analysis)	SE
4609	6	30.66394	I-126 SB (Basic Analysis)	SE
4609	7	29.203191	I-126 SB (Basic Analysis)	SE
4609	8	30.18725	I-126 SB (Basic Analysis)	SE
4609	9	30.791373	I-126 SB (Basic Analysis)	SE
4609	10	29.351862	I-126 SB (Basic Analysis)	SE
4611	1	59.599449	I-26 EB (Diverge Analysis)	SE
4611	2	60.391448	I-26 EB (Diverge Analysis)	SE
4611	3	60.523449	I-26 EB (Diverge Analysis)	SE
4611	4	55.791983	I-26 EB (Diverge Analysis)	SE
4611	5	57.815982	I-26 EB (Diverge Analysis)	SE
4611	6	57.616516	I-26 EB (Diverge Analysis)	SE
4611	7	59.529049	I-26 EB (Diverge Analysis)	SE
4611	8	57.399449	I-26 EB (Diverge Analysis)	SE
4611	9	58.437849	I-26 EB (Diverge Analysis)	SE
4611	10	57.824783	I-26 EB (Diverge Analysis)	SE
4619	1	40.803785	I-26 WB (Basic Analysis)	NW
4619	2	40.692905	I-26 WB (Basic Analysis)	NW
4619	3	41.269481	I-26 WB (Basic Analysis)	NW
4619	4	39.628459	I-26 WB (Basic Analysis)	NW
4619	5	36.169007	I-26 WB (Basic Analysis)	NW
4619	6	46.148194	I-26 WB (Basic Analysis)	NW
4619	7	32.310389	I-26 WB (Basic Analysis)	NW
4619	8	38.785772	I-26 WB (Basic Analysis)	NW
4619	9	38.586188	I-26 WB (Basic Analysis)	NW
4619	10	37.854381	I-26 WB (Basic Analysis)	NW
4624	1	94.876458	I-26 EB (Weaving Analysis)	SE
4624	2	100.94575	I-26 EB (Weaving Analysis)	SE
4624	3	100.586845	I-26 EB (Weaving Analysis)	SE
4624	4	86.338598	I-26 EB (Weaving Analysis)	SE
4624	5	94.041931	I-26 EB (Weaving Analysis)	SE
4624	6	90.204854	I-26 EB (Weaving Analysis)	SE
4624	7	94.266611	I-26 EB (Weaving Analysis)	SE
4624	8	92.32327	I-26 EB (Weaving Analysis)	SE

No Build AM

ID	Run	Density	Name (Type)	Direction
4624	9	97.657244	I-26 EB (Weaving Analysis)	SE
4624	10	94.330806	I-26 EB (Weaving Analysis)	SE
4639	1	73.947817	I-26 EB (Basic Analysis)	SE
4639	2	90.615334	I-26 EB (Basic Analysis)	SE
4639	3	91.912359	I-26 EB (Basic Analysis)	SE
4639	4	57.23806	I-26 EB (Basic Analysis)	SE
4639	5	81.069031	I-26 EB (Basic Analysis)	SE
4639	6	72.929081	I-26 EB (Basic Analysis)	SE
4639	7	77.980521	I-26 EB (Basic Analysis)	SE
4639	8	61.737892	I-26 EB (Basic Analysis)	SE
4639	9	76.820156	I-26 EB (Basic Analysis)	SE
4639	10	73.967695	I-26 EB (Basic Analysis)	SE
4641	1	86.764434	I-26 EB (Basic Analysis)	SE
4641	2	90.924101	I-26 EB (Basic Analysis)	SE
4641	3	84.503271	I-26 EB (Basic Analysis)	SE
4641	4	83.36179	I-26 EB (Basic Analysis)	SE
4641	5	88.292353	I-26 EB (Basic Analysis)	SE
4641	6	85.077975	I-26 EB (Basic Analysis)	SE
4641	7	84.62812	I-26 EB (Basic Analysis)	SE
4641	8	86.786233	I-26 EB (Basic Analysis)	SE
4641	9	84.695499	I-26 EB (Basic Analysis)	SE
4641	10	87.913842	I-26 EB (Basic Analysis)	SE
4643	1	34.508689	I-26 WB (Weaving Analysis)	NW
4643	2	33.508695	I-26 WB (Weaving Analysis)	NW
4643	3	36.668819	I-26 WB (Weaving Analysis)	NW
4643	4	34.067411	I-26 WB (Weaving Analysis)	NW
4643	5	33.736452	I-26 WB (Weaving Analysis)	NW
4643	6	35.444627	I-26 WB (Weaving Analysis)	NW
4643	7	36.142131	I-26 WB (Weaving Analysis)	NW
4643	8	32.850336	I-26 WB (Weaving Analysis)	NW
4643	9	35.163489	I-26 WB (Weaving Analysis)	NW
4643	10	35.907258	I-26 WB (Weaving Analysis)	NW
4646	1	35.104451	I-26 WB (Basic Analysis)	NW
4646	2	34.436502	I-26 WB (Basic Analysis)	NW
4646	3	34.665898	I-26 WB (Basic Analysis)	NW
4646	4	30.473785	I-26 WB (Basic Analysis)	NW
4646	5	34.710878	I-26 WB (Basic Analysis)	NW
4646	6	35.851115	I-26 WB (Basic Analysis)	NW
4646	7	33.042129	I-26 WB (Basic Analysis)	NW
4646	8	32.362935	I-26 WB (Basic Analysis)	NW
4646	9	35.477783	I-26 WB (Basic Analysis)	NW
4646	10	33.878752	I-26 WB (Basic Analysis)	NW
4649	1	109.31722	I-26 EB (Basic Analysis)	SE
4649	2	118.819348	I-26 EB (Basic Analysis)	SE
4649	3	105.635146	I-26 EB (Basic Analysis)	SE
4649	4	109.854091	I-26 EB (Basic Analysis)	SE
4649	5	109.3386	I-26 EB (Basic Analysis)	SE
4649	6	105.929712	I-26 EB (Basic Analysis)	SE
4649	7	105.309698	I-26 EB (Basic Analysis)	SE
4649	8	113.493405	I-26 EB (Basic Analysis)	SE
4649	9	101.815291	I-26 EB (Basic Analysis)	SE
4649	10	112.939906	I-26 EB (Basic Analysis)	SE
4650	1	110.969397	I-26 EB (Weaving Analysis)	SE
4650	2	114.075588	I-26 EB (Weaving Analysis)	SE
4650	3	104.388209	I-26 EB (Weaving Analysis)	SE
4650	4	108.695511	I-26 EB (Weaving Analysis)	SE
4650	5	106.562419	I-26 EB (Weaving Analysis)	SE
4650	6	108.498648	I-26 EB (Weaving Analysis)	SE
4650	7	105.266615	I-26 EB (Weaving Analysis)	SE
4650	8	111.778029	I-26 EB (Weaving Analysis)	SE
4650	9	104.590055	I-26 EB (Weaving Analysis)	SE
4650	10	112.20664	I-26 EB (Weaving Analysis)	SE
4651	1	35.23485	I-26 WB (Weaving Analysis)	NW
4651	2	35.623662	I-26 WB (Weaving Analysis)	NW

No Build AM

ID	Run	Density	Name (Type)	Direction
4651	3	35.226112	I-26 WB (Weaving Analysis)	NW
4651	4	36.079461	I-26 WB (Weaving Analysis)	NW
4651	5	35.344067	I-26 WB (Weaving Analysis)	NW
4651	6	36.258577	I-26 WB (Weaving Analysis)	NW
4651	7	35.205725	I-26 WB (Weaving Analysis)	NW
4651	8	35.067384	I-26 WB (Weaving Analysis)	NW
4651	9	36.791556	I-26 WB (Weaving Analysis)	NW
4651	10	35.658611	I-26 WB (Weaving Analysis)	NW
4654	1	36.74705	I-26 WB (Basic Analysis)	NW
4654	2	38.242362	I-26 WB (Basic Analysis)	NW
4654	3	38.161483	I-26 WB (Basic Analysis)	NW
4654	4	35.945789	I-26 WB (Basic Analysis)	NW
4654	5	36.948306	I-26 WB (Basic Analysis)	NW
4654	6	35.979645	I-26 WB (Basic Analysis)	NW
4654	7	36.639839	I-26 WB (Basic Analysis)	NW
4654	8	35.17086	I-26 WB (Basic Analysis)	NW
4654	9	38.503806	I-26 WB (Basic Analysis)	NW
4654	10	38.663682	I-26 WB (Basic Analysis)	NW
4659	1	47.090163	I-26 WB (Basic Analysis)	NW
4659	2	47.860191	I-26 WB (Basic Analysis)	NW
4659	3	48.656544	I-26 WB (Basic Analysis)	NW
4659	4	48.209006	I-26 WB (Basic Analysis)	NW
4659	5	46.965115	I-26 WB (Basic Analysis)	NW
4659	6	46.333298	I-26 WB (Basic Analysis)	NW
4659	7	49.446316	I-26 WB (Basic Analysis)	NW
4659	8	48.307728	I-26 WB (Basic Analysis)	NW
4659	9	46.129273	I-26 WB (Basic Analysis)	NW
4659	10	45.536944	I-26 WB (Basic Analysis)	NW
4665	1	97.968664	I-26 EB (Basic Analysis)	SE
4665	2	111.711454	I-26 EB (Basic Analysis)	SE
4665	3	96.81166	I-26 EB (Basic Analysis)	SE
4665	4	98.305002	I-26 EB (Basic Analysis)	SE
4665	5	103.168456	I-26 EB (Basic Analysis)	SE
4665	6	96.778026	I-26 EB (Basic Analysis)	SE
4665	7	96.905835	I-26 EB (Basic Analysis)	SE
4665	8	102.704309	I-26 EB (Basic Analysis)	SE
4665	9	92.654516	I-26 EB (Basic Analysis)	SE
4665	10	104.971231	I-26 EB (Basic Analysis)	SE
4667	1	90.968279	I-26 EB (Merge Analysis)	SE
4667	2	95.270061	I-26 EB (Merge Analysis)	SE
4667	3	85.017832	I-26 EB (Merge Analysis)	SE
4667	4	85.034986	I-26 EB (Merge Analysis)	SE
4667	5	91.151253	I-26 EB (Merge Analysis)	SE
4667	6	88.753539	I-26 EB (Merge Analysis)	SE
4667	7	86.279586	I-26 EB (Merge Analysis)	SE
4667	8	89.836131	I-26 EB (Merge Analysis)	SE
4667	9	85.656333	I-26 EB (Merge Analysis)	SE
4667	10	94.448586	I-26 EB (Merge Analysis)	SE
4668	1	90.968279	I-26 EB (Merge Analysis)	SE
4668	2	95.270061	I-26 EB (Merge Analysis)	SE
4668	3	85.017832	I-26 EB (Merge Analysis)	SE
4668	4	85.034986	I-26 EB (Merge Analysis)	SE
4668	5	91.151253	I-26 EB (Merge Analysis)	SE
4668	6	88.753539	I-26 EB (Merge Analysis)	SE
4668	7	86.279586	I-26 EB (Merge Analysis)	SE
4668	8	89.836131	I-26 EB (Merge Analysis)	SE
4668	9	85.656333	I-26 EB (Merge Analysis)	SE
4668	10	94.448586	I-26 EB (Merge Analysis)	SE
4669	1	79.147716	I-26 EB (Basic Analysis)	SE
4669	2	83.907053	I-26 EB (Basic Analysis)	SE
4669	3	74.20184	I-26 EB (Basic Analysis)	SE
4669	4	77.405536	I-26 EB (Basic Analysis)	SE
4669	5	77.961733	I-26 EB (Basic Analysis)	SE
4669	6	76.113447	I-26 EB (Basic Analysis)	SE

No Build AM

ID	Run	Density	Name (Type)	Direction
4669	7	71.393472	I-26 EB (Basic Analysis)	SE
4669	8	78.892722	I-26 EB (Basic Analysis)	SE
4669	9	73.183571	I-26 EB (Basic Analysis)	SE
4669	10	82.690264	I-26 EB (Basic Analysis)	SE
4670	1	71.22541	I-26 EB (Diverge Analysis)	SE
4670	2	80.54611	I-26 EB (Diverge Analysis)	SE
4670	3	70.97092	I-26 EB (Diverge Analysis)	SE
4670	4	73.293142	I-26 EB (Diverge Analysis)	SE
4670	5	76.044816	I-26 EB (Diverge Analysis)	SE
4670	6	70.984554	I-26 EB (Diverge Analysis)	SE
4670	7	67.976117	I-26 EB (Diverge Analysis)	SE
4670	8	75.081389	I-26 EB (Diverge Analysis)	SE
4670	9	69.514419	I-26 EB (Diverge Analysis)	SE
4670	10	78.298871	I-26 EB (Diverge Analysis)	SE
4675	1	30.668971	I-26 WB (Merge Analysis)	NW
4675	2	31.832526	I-26 WB (Merge Analysis)	NW
4675	3	32.782926	I-26 WB (Merge Analysis)	NW
4675	4	36.371369	I-26 WB (Merge Analysis)	NW
4675	5	32.620615	I-26 WB (Merge Analysis)	NW
4675	6	32.225593	I-26 WB (Merge Analysis)	NW
4675	7	32.636259	I-26 WB (Merge Analysis)	NW
4675	8	30.033415	I-26 WB (Merge Analysis)	NW
4675	9	33.373503	I-26 WB (Merge Analysis)	NW
4675	10	31.529415	I-26 WB (Merge Analysis)	NW
4676	1	45.011942	I-26 WB (Basic Analysis)	NW
4676	2	45.136431	I-26 WB (Basic Analysis)	NW
4676	3	46.353104	I-26 WB (Basic Analysis)	NW
4676	4	64.610677	I-26 WB (Basic Analysis)	NW
4676	5	45.322334	I-26 WB (Basic Analysis)	NW
4676	6	45.660115	I-26 WB (Basic Analysis)	NW
4676	7	44.91318	I-26 WB (Basic Analysis)	NW
4676	8	43.907308	I-26 WB (Basic Analysis)	NW
4676	9	46.027773	I-26 WB (Basic Analysis)	NW
4676	10	45.179587	I-26 WB (Basic Analysis)	NW
4677	1	45.011942	I-26 WB (Basic Analysis)	NW
4677	2	45.136431	I-26 WB (Basic Analysis)	NW
4677	3	46.353104	I-26 WB (Basic Analysis)	NW
4677	4	64.610677	I-26 WB (Basic Analysis)	NW
4677	5	45.322334	I-26 WB (Basic Analysis)	NW
4677	6	45.660115	I-26 WB (Basic Analysis)	NW
4677	7	44.91318	I-26 WB (Basic Analysis)	NW
4677	8	43.907308	I-26 WB (Basic Analysis)	NW
4677	9	46.027773	I-26 WB (Basic Analysis)	NW
4677	10	45.179587	I-26 WB (Basic Analysis)	NW
4687	1	123.070538	I-26 EB (Basic Analysis)	SE
4687	2	126.361089	I-26 EB (Basic Analysis)	SE
4687	3	115.288218	I-26 EB (Basic Analysis)	SE
4687	4	113.741667	I-26 EB (Basic Analysis)	SE
4687	5	123.092019	I-26 EB (Basic Analysis)	SE
4687	6	120.215369	I-26 EB (Basic Analysis)	SE
4687	7	120.896116	I-26 EB (Basic Analysis)	SE
4687	8	119.585843	I-26 EB (Basic Analysis)	SE
4687	9	118.354056	I-26 EB (Basic Analysis)	SE
4687	10	127.46978	I-26 EB (Basic Analysis)	SE
4689	1	31.77391	I-26 WB (Basic Analysis)	NW
4689	2	32.73516	I-26 WB (Basic Analysis)	NW
4689	3	33.061118	I-26 WB (Basic Analysis)	NW
4689	4	30.424834	I-26 WB (Basic Analysis)	NW
4689	5	31.445182	I-26 WB (Basic Analysis)	NW
4689	6	33.095283	I-26 WB (Basic Analysis)	NW
4689	7	31.184786	I-26 WB (Basic Analysis)	NW
4689	8	30.871756	I-26 WB (Basic Analysis)	NW
4689	9	33.36399	I-26 WB (Basic Analysis)	NW
4689	10	32.5117	I-26 WB (Basic Analysis)	NW

No Build AM

ID	Run	Density	Name (Type)	Direction
4700	1	26.608105	I-26 WB (Merge Analysis)	NW
4700	2	24.832312	I-26 WB (Merge Analysis)	NW
4700	3	24.061793	I-26 WB (Merge Analysis)	NW
4700	4	22.854886	I-26 WB (Merge Analysis)	NW
4700	5	25.53658	I-26 WB (Merge Analysis)	NW
4700	6	25.185166	I-26 WB (Merge Analysis)	NW
4700	7	24.410326	I-26 WB (Merge Analysis)	NW
4700	8	24.276386	I-26 WB (Merge Analysis)	NW
4700	9	25.401199	I-26 WB (Merge Analysis)	NW
4700	10	25.932641	I-26 WB (Merge Analysis)	NW
4701	1	37.143349	I-26 WB (Basic Analysis)	NW
4701	2	35.8235	I-26 WB (Basic Analysis)	NW
4701	3	35.566476	I-26 WB (Basic Analysis)	NW
4701	4	28.23089	I-26 WB (Basic Analysis)	NW
4701	5	34.684261	I-26 WB (Basic Analysis)	NW
4701	6	34.892658	I-26 WB (Basic Analysis)	NW
4701	7	34.906551	I-26 WB (Basic Analysis)	NW
4701	8	32.71838	I-26 WB (Basic Analysis)	NW
4701	9	35.205254	I-26 WB (Basic Analysis)	NW
4701	10	32.426623	I-26 WB (Basic Analysis)	NW
4702	1	25.24285	I-26 WB (Diverge Analysis)	NW
4702	2	24.199074	I-26 WB (Diverge Analysis)	NW
4702	3	24.003664	I-26 WB (Diverge Analysis)	NW
4702	4	21.605606	I-26 WB (Diverge Analysis)	NW
4702	5	24.971182	I-26 WB (Diverge Analysis)	NW
4702	6	24.498867	I-26 WB (Diverge Analysis)	NW
4702	7	23.231556	I-26 WB (Diverge Analysis)	NW
4702	8	22.755206	I-26 WB (Diverge Analysis)	NW
4702	9	24.658208	I-26 WB (Diverge Analysis)	NW
4702	10	25.541525	I-26 WB (Diverge Analysis)	NW
4703	1	25.24285	I-26 WB (Diverge Analysis)	NW
4703	2	24.199074	I-26 WB (Diverge Analysis)	NW
4703	3	24.003664	I-26 WB (Diverge Analysis)	NW
4703	4	21.605606	I-26 WB (Diverge Analysis)	NW
4703	5	24.971182	I-26 WB (Diverge Analysis)	NW
4703	6	24.498867	I-26 WB (Diverge Analysis)	NW
4703	7	23.231556	I-26 WB (Diverge Analysis)	NW
4703	8	22.755206	I-26 WB (Diverge Analysis)	NW
4703	9	24.658208	I-26 WB (Diverge Analysis)	NW
4703	10	25.541525	I-26 WB (Diverge Analysis)	NW
4705	1	116.35175	I-26 EB (Merge Analysis)	SE
4705	2	120.120082	I-26 EB (Merge Analysis)	SE
4705	3	105.206774	I-26 EB (Merge Analysis)	SE
4705	4	102.52026	I-26 EB (Merge Analysis)	SE
4705	5	115.72069	I-26 EB (Merge Analysis)	SE
4705	6	108.961584	I-26 EB (Merge Analysis)	SE
4705	7	111.742756	I-26 EB (Merge Analysis)	SE
4705	8	108.952568	I-26 EB (Merge Analysis)	SE
4705	9	112.069556	I-26 EB (Merge Analysis)	SE
4705	10	121.2312	I-26 EB (Merge Analysis)	SE
4706	1	116.35175	I-26 EB (Merge Analysis)	SE
4706	2	120.120082	I-26 EB (Merge Analysis)	SE
4706	3	105.206774	I-26 EB (Merge Analysis)	SE
4706	4	102.52026	I-26 EB (Merge Analysis)	SE
4706	5	115.72069	I-26 EB (Merge Analysis)	SE
4706	6	108.961584	I-26 EB (Merge Analysis)	SE
4706	7	111.742756	I-26 EB (Merge Analysis)	SE
4706	8	108.952568	I-26 EB (Merge Analysis)	SE
4706	9	112.069556	I-26 EB (Merge Analysis)	SE
4706	10	121.2312	I-26 EB (Merge Analysis)	SE
4707	1	114.335432	I-26 EB (Diverge Analysis)	SE
4707	2	119.612498	I-26 EB (Diverge Analysis)	SE
4707	3	104.373835	I-26 EB (Diverge Analysis)	SE
4707	4	100.243703	I-26 EB (Diverge Analysis)	SE

No Build AM

ID	Run	Density	Name (Type)	Direction
4707	5	114.886898	I-26 EB (Diverge Analysis)	SE
4707	6	106.031168	I-26 EB (Diverge Analysis)	SE
4707	7	110.903433	I-26 EB (Diverge Analysis)	SE
4707	8	105.849301	I-26 EB (Diverge Analysis)	SE
4707	9	109.6509	I-26 EB (Diverge Analysis)	SE
4707	10	119.750364	I-26 EB (Diverge Analysis)	SE
4712	1	28.846359	I-26 WB (Basic Analysis)	NW
4712	2	31.520459	I-26 WB (Basic Analysis)	NW
4712	3	30.63344	I-26 WB (Basic Analysis)	NW
4712	4	28.676782	I-26 WB (Basic Analysis)	NW
4712	5	27.513223	I-26 WB (Basic Analysis)	NW
4712	6	29.44901	I-26 WB (Basic Analysis)	NW
4712	7	28.616778	I-26 WB (Basic Analysis)	NW
4712	8	30.748231	I-26 WB (Basic Analysis)	NW
4712	9	31.901355	I-26 WB (Basic Analysis)	NW
4712	10	29.58989	I-26 WB (Basic Analysis)	NW
4714	1	138.710324	I-26 EB (Basic Analysis)	SE
4714	2	135.814104	I-26 EB (Basic Analysis)	SE
4714	3	122.463235	I-26 EB (Basic Analysis)	SE
4714	4	126.883984	I-26 EB (Basic Analysis)	SE
4714	5	132.401572	I-26 EB (Basic Analysis)	SE
4714	6	131.209692	I-26 EB (Basic Analysis)	SE
4714	7	130.268259	I-26 EB (Basic Analysis)	SE
4714	8	134.189395	I-26 EB (Basic Analysis)	SE
4714	9	133.783539	I-26 EB (Basic Analysis)	SE
4714	10	138.547211	I-26 EB (Basic Analysis)	SE
4718	1	129.684877	I-26 EB (Merge Analysis)	SE
4718	2	130.537608	I-26 EB (Merge Analysis)	SE
4718	3	118.26864	I-26 EB (Merge Analysis)	SE
4718	4	120.882619	I-26 EB (Merge Analysis)	SE
4718	5	128.170681	I-26 EB (Merge Analysis)	SE
4718	6	127.608836	I-26 EB (Merge Analysis)	SE
4718	7	121.882785	I-26 EB (Merge Analysis)	SE
4718	8	128.923794	I-26 EB (Merge Analysis)	SE
4718	9	128.132827	I-26 EB (Merge Analysis)	SE
4718	10	131.918316	I-26 EB (Merge Analysis)	SE
4719	1	129.684877	I-26 EB (Merge Analysis)	SE
4719	2	130.537608	I-26 EB (Merge Analysis)	SE
4719	3	118.26864	I-26 EB (Merge Analysis)	SE
4719	4	120.882619	I-26 EB (Merge Analysis)	SE
4719	5	128.170681	I-26 EB (Merge Analysis)	SE
4719	6	127.608836	I-26 EB (Merge Analysis)	SE
4719	7	121.882785	I-26 EB (Merge Analysis)	SE
4719	8	128.923794	I-26 EB (Merge Analysis)	SE
4719	9	128.132827	I-26 EB (Merge Analysis)	SE
4719	10	131.918316	I-26 EB (Merge Analysis)	SE
4720	1	127.462095	I-26 EB (Diverge Analysis)	SE
4720	2	126.555696	I-26 EB (Diverge Analysis)	SE
4720	3	111.519433	I-26 EB (Diverge Analysis)	SE
4720	4	114.669832	I-26 EB (Diverge Analysis)	SE
4720	5	123.595964	I-26 EB (Diverge Analysis)	SE
4720	6	123.202897	I-26 EB (Diverge Analysis)	SE
4720	7	117.063432	I-26 EB (Diverge Analysis)	SE
4720	8	123.657563	I-26 EB (Diverge Analysis)	SE
4720	9	123.088497	I-26 EB (Diverge Analysis)	SE
4720	10	128.943429	I-26 EB (Diverge Analysis)	SE
4725	1	28.918015	I-26 WB (Merge Analysis)	NW
4725	2	27.186957	I-26 WB (Merge Analysis)	NW
4725	3	25.956503	I-26 WB (Merge Analysis)	NW
4725	4	25.119046	I-26 WB (Merge Analysis)	NW
4725	5	27.481705	I-26 WB (Merge Analysis)	NW
4725	6	30.078291	I-26 WB (Merge Analysis)	NW
4725	7	28.150735	I-26 WB (Merge Analysis)	NW
4725	8	26.698051	I-26 WB (Merge Analysis)	NW

ID	Run	Density	Name (Type)	Direction
4725	9	26.12727	I-26 WB (Merge Analysis)	NW
4725	10	30.047881	I-26 WB (Merge Analysis)	NW
4726	1		I-26 WB (Basic Analysis)	NW
4726	2		I-26 WB (Basic Analysis)	NW
4726	3		I-26 WB (Basic Analysis)	NW
4726	4		I-26 WB (Basic Analysis)	NW
4726	5		I-26 WB (Basic Analysis)	NW
4726	6		I-26 WB (Basic Analysis)	NW
4726	7		I-26 WB (Basic Analysis)	NW
4726	8		I-26 WB (Basic Analysis)	NW
4726	9		I-26 WB (Basic Analysis)	NW
4726	10		I-26 WB (Basic Analysis)	NW
4727	1	29.223421	I-26 WB (Diverge Analysis)	NW
4727	2	29.120813	I-26 WB (Diverge Analysis)	NW
4727	3	28.594191	I-26 WB (Diverge Analysis)	NW
4727	4	24.867254	I-26 WB (Diverge Analysis)	NW
4727	5	30.22908	I-26 WB (Diverge Analysis)	NW
4727	6	28.844705	I-26 WB (Diverge Analysis)	NW
4727	7	28.681512	I-26 WB (Diverge Analysis)	NW
4727	8	27.388613	I-26 WB (Diverge Analysis)	NW
4727	9	27.405142	I-26 WB (Diverge Analysis)	NW
4727	10	28.616165	I-26 WB (Diverge Analysis)	NW
4728	1	31.564158	I-26 WB (Basic Analysis)	NW
4728	2	29.968544	I-26 WB (Basic Analysis)	NW
4728	3	32.202404	I-26 WB (Basic Analysis)	NW
4728	4	25.752253	I-26 WB (Basic Analysis)	NW
4728	5	28.169851	I-26 WB (Basic Analysis)	NW
4728	6	32.09603	I-26 WB (Basic Analysis)	NW
4728	7	32.84065	I-26 WB (Basic Analysis)	NW
4728	8	27.957102	I-26 WB (Basic Analysis)	NW
4728	9	30.597119	I-26 WB (Basic Analysis)	NW
4728	10	30.809868	I-26 WB (Basic Analysis)	NW
4729	1	20.739315	I-26 WB (Diverge Analysis)	NW
4729	2	22.459688	I-26 WB (Diverge Analysis)	NW
4729	3	23.172098	I-26 WB (Diverge Analysis)	NW
4729	4	20.84739	I-26 WB (Diverge Analysis)	NW
4729	5	21.337034	I-26 WB (Diverge Analysis)	NW
4729	6	21.22896	I-26 WB (Diverge Analysis)	NW
4729	7	20.053371	I-26 WB (Diverge Analysis)	NW
4729	8	22.027389	I-26 WB (Diverge Analysis)	NW
4729	9	24.089631	I-26 WB (Diverge Analysis)	NW
4729	10	22.616286	I-26 WB (Diverge Analysis)	NW
4730	1	20.739315	I-26 WB (Diverge Analysis)	NW
4730	2	22.459688	I-26 WB (Diverge Analysis)	NW
4730	3	23.172098	I-26 WB (Diverge Analysis)	NW
4730	4	20.84739	I-26 WB (Diverge Analysis)	NW
4730	5	21.337034	I-26 WB (Diverge Analysis)	NW
4730	6	21.22896	I-26 WB (Diverge Analysis)	NW
4730	7	20.053371	I-26 WB (Diverge Analysis)	NW
4730	8	22.027389	I-26 WB (Diverge Analysis)	NW
4730	9	24.089631	I-26 WB (Diverge Analysis)	NW
4730	10	22.616286	I-26 WB (Diverge Analysis)	NW
4732	1	23.851733	I-26 WB (Basic Analysis)	NW
4732	2	25.451879	I-26 WB (Basic Analysis)	NW
4732	3	22.98366	I-26 WB (Basic Analysis)	NW
4732	4	22.480178	I-26 WB (Basic Analysis)	NW
4732	5	25.414262	I-26 WB (Basic Analysis)	NW
4732	6	26.458843	I-26 WB (Basic Analysis)	NW
4732	7	24.109261	I-26 WB (Basic Analysis)	NW

No Build AM

ID	Run	Density	Name (Type)	Direction
4732	8	24.42466	I-26 WB (Basic Analysis)	NW
4732	9	23.66365	I-26 WB (Basic Analysis)	NW
4732	10	25.014949	I-26 WB (Basic Analysis)	NW
4733	1	143.187542	I-26 EB (Basic Analysis)	SE
4733	2	147.657646	I-26 EB (Basic Analysis)	SE
4733	3	133.84592	I-26 EB (Basic Analysis)	SE
4733	4	141.264916	I-26 EB (Basic Analysis)	SE
4733	5	138.557652	I-26 EB (Basic Analysis)	SE
4733	6	141.053168	I-26 EB (Basic Analysis)	SE
4733	7	136.27908	I-26 EB (Basic Analysis)	SE
4733	8	143.382404	I-26 EB (Basic Analysis)	SE
4733	9	144.871138	I-26 EB (Basic Analysis)	SE
4733	10	140.050284	I-26 EB (Basic Analysis)	SE
4736	1	136.144462	I-26 EB (Basic Analysis)	SE
4736	2	138.918203	I-26 EB (Basic Analysis)	SE
4736	3	124.65253	I-26 EB (Basic Analysis)	SE
4736	4	134.787741	I-26 EB (Basic Analysis)	SE
4736	5	131.94365	I-26 EB (Basic Analysis)	SE
4736	6	132.17982	I-26 EB (Basic Analysis)	SE
4736	7	130.069365	I-26 EB (Basic Analysis)	SE
4736	8	132.687336	I-26 EB (Basic Analysis)	SE
4736	9	137.822775	I-26 EB (Basic Analysis)	SE
4736	10	132.91848	I-26 EB (Basic Analysis)	SE
4737	1	117.320646	I-26 EB (Diverge Analysis)	SE
4737	2	120.01364	I-26 EB (Diverge Analysis)	SE
4737	3	106.983503	I-26 EB (Diverge Analysis)	SE
4737	4	116.245919	I-26 EB (Diverge Analysis)	SE
4737	5	114.224939	I-26 EB (Diverge Analysis)	SE
4737	6	114.514003	I-26 EB (Diverge Analysis)	SE
4737	7	113.64928	I-26 EB (Diverge Analysis)	SE
4737	8	115.603553	I-26 EB (Diverge Analysis)	SE
4737	9	122.190271	I-26 EB (Diverge Analysis)	SE
4737	10	114.259527	I-26 EB (Diverge Analysis)	SE
4739	1	20.975418	I-26 WB (Weaving Analysis)	NW
4739	2	19.65023	I-26 WB (Weaving Analysis)	NW
4739	3	20.752072	I-26 WB (Weaving Analysis)	NW
4739	4	17.844314	I-26 WB (Weaving Analysis)	NW
4739	5	20.492565	I-26 WB (Weaving Analysis)	NW
4739	6	20.092668	I-26 WB (Weaving Analysis)	NW
4739	7	19.97355	I-26 WB (Weaving Analysis)	NW
4739	8	19.592798	I-26 WB (Weaving Analysis)	NW
4739	9	20.537234	I-26 WB (Weaving Analysis)	NW
4739	10	20.726546	I-26 WB (Weaving Analysis)	NW
4741	1	27.742574	I-26 WB (Basic Analysis)	NW
4741	2	26.788721	I-26 WB (Basic Analysis)	NW
4741	3	24.889098	I-26 WB (Basic Analysis)	NW
4741	4	21.582947	I-26 WB (Basic Analysis)	NW
4741	5	26.934224	I-26 WB (Basic Analysis)	NW
4741	6	24.484923	I-26 WB (Basic Analysis)	NW
4741	7	24.50109	I-26 WB (Basic Analysis)	NW
4741	8	24.590009	I-26 WB (Basic Analysis)	NW
4741	9	25.325607	I-26 WB (Basic Analysis)	NW
4741	10	21.679949	I-26 WB (Basic Analysis)	NW
4742	1	17.492531	I-26 WB (Diverge Analysis)	NW
4742	2	17.474083	I-26 WB (Diverge Analysis)	NW
4742	3	18.965999	I-26 WB (Diverge Analysis)	NW
4742	4	16.637043	I-26 WB (Diverge Analysis)	NW

No Build AM

ID	Run	Density	Name (Type)	Direction
4742	5	18.968304	I-26 WB (Diverge Analysis)	NW
4742	6	18.587831	I-26 WB (Diverge Analysis)	NW
4742	7	17.743873	I-26 WB (Diverge Analysis)	NW
4742	8	15.580942	I-26 WB (Diverge Analysis)	NW
4742	9	17.372624	I-26 WB (Diverge Analysis)	NW
4742	10	17.972157	I-26 WB (Diverge Analysis)	NW
4745	1	139.812958	I-26 EB (Basic Analysis)	SE
4745	2	147.149946	I-26 EB (Basic Analysis)	SE
4745	3	133.762998	I-26 EB (Basic Analysis)	SE
4745	4	145.574827	I-26 EB (Basic Analysis)	SE
4745	5	144.190725	I-26 EB (Basic Analysis)	SE
4745	6	140.580164	I-26 EB (Basic Analysis)	SE
4745	7	147.149945	I-26 EB (Basic Analysis)	SE
4745	8	135.619948	I-26 EB (Basic Analysis)	SE
4745	9	147.826338	I-26 EB (Basic Analysis)	SE
4745	10	142.878648	I-26 EB (Basic Analysis)	SE
4748	1	132.022044	I-26 EB (Weaving Analysis)	SE
4748	2	138.48314	I-26 EB (Weaving Analysis)	SE
4748	3	126.804686	I-26 EB (Weaving Analysis)	SE
4748	4	136.994733	I-26 EB (Weaving Analysis)	SE
4748	5	134.004323	I-26 EB (Weaving Analysis)	SE
4748	6	133.732468	I-26 EB (Weaving Analysis)	SE
4748	7	133.542169	I-26 EB (Weaving Analysis)	SE
4748	8	128.653303	I-26 EB (Weaving Analysis)	SE
4748	9	137.194093	I-26 EB (Weaving Analysis)	SE
4748	10	133.449284	I-26 EB (Weaving Analysis)	SE
4753	1	20.611359	I-26 WB (Basic Analysis)	NW
4753	2	21.28109	I-26 WB (Basic Analysis)	NW
4753	3	21.460388	I-26 WB (Basic Analysis)	NW
4753	4	18.900118	I-26 WB (Basic Analysis)	NW
4753	5	19.002951	I-26 WB (Basic Analysis)	NW
4753	6	19.451196	I-26 WB (Basic Analysis)	NW
4753	7	21.035874	I-26 WB (Basic Analysis)	NW
4753	8	21.38656	I-26 WB (Basic Analysis)	NW
4753	9	23.751711	I-26 WB (Basic Analysis)	NW
4753	10	21.979825	I-26 WB (Basic Analysis)	NW
4755	1	132.316468	I-26 EB (Basic Analysis)	SE
4755	2	134.298331	I-26 EB (Basic Analysis)	SE
4755	3	126.747186	I-26 EB (Basic Analysis)	SE
4755	4	130.886518	I-26 EB (Basic Analysis)	SE
4755	5	131.29209	I-26 EB (Basic Analysis)	SE
4755	6	132.224484	I-26 EB (Basic Analysis)	SE
4755	7	129.83287	I-26 EB (Basic Analysis)	SE
4755	8	126.053116	I-26 EB (Basic Analysis)	SE
4755	9	134.653727	I-26 EB (Basic Analysis)	SE
4755	10	130.046108	I-26 EB (Basic Analysis)	SE
4756	1	116.385901	I-26 EB (Diverge Analysis)	SE
4756	2	119.078455	I-26 EB (Diverge Analysis)	SE
4756	3	111.090145	I-26 EB (Diverge Analysis)	SE
4756	4	116.525963	I-26 EB (Diverge Analysis)	SE
4756	5	115.325784	I-26 EB (Diverge Analysis)	SE
4756	6	116.695001	I-26 EB (Diverge Analysis)	SE
4756	7	118.052145	I-26 EB (Diverge Analysis)	SE
4756	8	112.753973	I-26 EB (Diverge Analysis)	SE
4756	9	121.828964	I-26 EB (Diverge Analysis)	SE
4756	10	114.321209	I-26 EB (Diverge Analysis)	SE
4760	1	16.173466	I-26 WB (Basic Analysis)	NW

No Build AM

ID	Run	Density	Name (Type)	Direction
4760	2	16.387979	I-26 WB (Basic Analysis)	NW
4760	3	16.257682	I-26 WB (Basic Analysis)	NW
4760	4	14.675849	I-26 WB (Basic Analysis)	NW
4760	5	16.463455	I-26 WB (Basic Analysis)	NW
4760	6	17.067269	I-26 WB (Basic Analysis)	NW
4760	7	15.254239	I-26 WB (Basic Analysis)	NW
4760	8	16.33157	I-26 WB (Basic Analysis)	NW
4760	9	16.353816	I-26 WB (Basic Analysis)	NW
4760	10	16.046347	I-26 WB (Basic Analysis)	NW
4761	1	16.173466	I-26 WB (Basic Analysis)	NW
4761	2	16.387979	I-26 WB (Basic Analysis)	NW
4761	3	16.257682	I-26 WB (Basic Analysis)	NW
4761	4	14.675849	I-26 WB (Basic Analysis)	NW
4761	5	16.463455	I-26 WB (Basic Analysis)	NW
4761	6	17.067269	I-26 WB (Basic Analysis)	NW
4761	7	15.254239	I-26 WB (Basic Analysis)	NW
4761	8	16.33157	I-26 WB (Basic Analysis)	NW
4761	9	16.353816	I-26 WB (Basic Analysis)	NW
4761	10	16.046347	I-26 WB (Basic Analysis)	NW
4764	1	14.73989	I-26 WB (Basic Analysis)	NW
4764	2	14.997306	I-26 WB (Basic Analysis)	NW
4764	3	15.159383	I-26 WB (Basic Analysis)	NW
4764	4	13.815857	I-26 WB (Basic Analysis)	NW
4764	5	14.989072	I-26 WB (Basic Analysis)	NW
4764	6	15.169675	I-26 WB (Basic Analysis)	NW
4764	7	14.806736	I-26 WB (Basic Analysis)	NW
4764	8	14.703163	I-26 WB (Basic Analysis)	NW
4764	9	15.354503	I-26 WB (Basic Analysis)	NW
4764	10	15.335869	I-26 WB (Basic Analysis)	NW
4768	1	73.313244	I-26 EB (Basic Analysis)	SE
4768	2	67.62363	I-26 EB (Basic Analysis)	SE
4768	3	66.625843	I-26 EB (Basic Analysis)	SE
4768	4	74.422801	I-26 EB (Basic Analysis)	SE
4768	5	69.533154	I-26 EB (Basic Analysis)	SE
4768	6	63.980267	I-26 EB (Basic Analysis)	SE
4768	7	69.208154	I-26 EB (Basic Analysis)	SE
4768	8	64.050259	I-26 EB (Basic Analysis)	SE
4768	9	73.814254	I-26 EB (Basic Analysis)	SE
4768	10	67.686569	I-26 EB (Basic Analysis)	SE
4769	1	103.599257	I-26 EB (Diverge Analysis)	SE
4769	2	107.498392	I-26 EB (Diverge Analysis)	SE
4769	3	97.389813	I-26 EB (Diverge Analysis)	SE
4769	4	99.515193	I-26 EB (Diverge Analysis)	SE
4769	5	99.809517	I-26 EB (Diverge Analysis)	SE
4769	6	99.267754	I-26 EB (Diverge Analysis)	SE
4769	7	98.358736	I-26 EB (Diverge Analysis)	SE
4769	8	101.494713	I-26 EB (Diverge Analysis)	SE
4769	9	103.383072	I-26 EB (Diverge Analysis)	SE
4769	10	100.405977	I-26 EB (Diverge Analysis)	SE
6149	1	16.025965	I-26 EB (Merge Analysis)	S
6149	2	14.499894	I-26 EB (Merge Analysis)	S
6149	3	15.567996	I-26 EB (Merge Analysis)	S
6149	4	15.971304	I-26 EB (Merge Analysis)	S
6149	5	14.948999	I-26 EB (Merge Analysis)	S
6149	6	14.479211	I-26 EB (Merge Analysis)	S
6149	7	14.95934	I-26 EB (Merge Analysis)	S
6149	8	15.237077	I-26 EB (Merge Analysis)	S

No Build AM

ID	Run	Density	Name (Type)	Direction
6149	9	15.51629	I-26 EB (Merge Analysis)	S
6149	10	15.504471	I-26 EB (Merge Analysis)	S
6150	1	16.025965	I-26 EB (Merge Analysis)	S
6150	2	14.499894	I-26 EB (Merge Analysis)	S
6150	3	15.567996	I-26 EB (Merge Analysis)	S
6150	4	15.971304	I-26 EB (Merge Analysis)	S
6150	5	14.948999	I-26 EB (Merge Analysis)	S
6150	6	14.479211	I-26 EB (Merge Analysis)	S
6150	7	14.95934	I-26 EB (Merge Analysis)	S
6150	8	15.237077	I-26 EB (Merge Analysis)	S
6150	9	15.51629	I-26 EB (Merge Analysis)	S
6150	10	15.504471	I-26 EB (Merge Analysis)	S
6151	1	19.943197	I-26 EB (Basic Analysis)	S
6151	2	21.201796	I-26 EB (Basic Analysis)	S
6151	3	20.442166	I-26 EB (Basic Analysis)	S
6151	4	19.837138	I-26 EB (Basic Analysis)	S
6151	5	20.081546	I-26 EB (Basic Analysis)	S
6151	6	21.2418	I-26 EB (Basic Analysis)	S
6151	7	19.512173	I-26 EB (Basic Analysis)	S
6151	8	20.004107	I-26 EB (Basic Analysis)	S
6151	9	20.263014	I-26 EB (Basic Analysis)	S
6151	10	19.71707	I-26 EB (Basic Analysis)	S
6152	1	19.943197	I-26 EB (Basic Analysis)	S
6152	2	21.201796	I-26 EB (Basic Analysis)	S
6152	3	20.442166	I-26 EB (Basic Analysis)	S
6152	4	19.837138	I-26 EB (Basic Analysis)	S
6152	5	20.081546	I-26 EB (Basic Analysis)	S
6152	6	21.2418	I-26 EB (Basic Analysis)	S
6152	7	19.512173	I-26 EB (Basic Analysis)	S
6152	8	20.004107	I-26 EB (Basic Analysis)	S
6152	9	20.263014	I-26 EB (Basic Analysis)	S
6152	10	19.71707	I-26 EB (Basic Analysis)	S
6159	1	47.061297	I-26 WB (Diverge Analysis)	N
6159	2	31.891294	I-26 WB (Diverge Analysis)	N
6159	3	30.935851	I-26 WB (Diverge Analysis)	N
6159	4	75.927371	I-26 WB (Diverge Analysis)	N
6159	5	70.573129	I-26 WB (Diverge Analysis)	N
6159	6	41.665242	I-26 WB (Diverge Analysis)	N
6159	7	55.957157	I-26 WB (Diverge Analysis)	N
6159	8	76.81173	I-26 WB (Diverge Analysis)	N
6159	9	33.984069	I-26 WB (Diverge Analysis)	N
6159	10	29.382473	I-26 WB (Diverge Analysis)	N
6160	1	47.061297	I-26 WB (Diverge Analysis)	N
6160	2	31.891294	I-26 WB (Diverge Analysis)	N
6160	3	30.935851	I-26 WB (Diverge Analysis)	N
6160	4	75.927371	I-26 WB (Diverge Analysis)	N
6160	5	70.573129	I-26 WB (Diverge Analysis)	N
6160	6	41.665242	I-26 WB (Diverge Analysis)	N
6160	7	55.957157	I-26 WB (Diverge Analysis)	N
6160	8	76.81173	I-26 WB (Diverge Analysis)	N
6160	9	33.984069	I-26 WB (Diverge Analysis)	N
6160	10	29.382473	I-26 WB (Diverge Analysis)	N
6165	1	22.071414	I-26 WB (Basic Analysis)	N
6165	2	22.037133	I-26 WB (Basic Analysis)	N
6165	3	22.710188	I-26 WB (Basic Analysis)	N
6165	4	22.842743	I-26 WB (Basic Analysis)	N
6165	5	21.430355	I-26 WB (Basic Analysis)	N

ID	Run	Density	Name (Type)	Direction
6165	6	21.942288	I-26 WB (Basic Analysis)	N
6165	7	22.278244	I-26 WB (Basic Analysis)	N
6165	8	23.043859	I-26 WB (Basic Analysis)	N
6165	9	20.620174	I-26 WB (Basic Analysis)	N
6165	10	20.767584	I-26 WB (Basic Analysis)	N
6166	1	15.770258	I-26 EB (Basic Analysis)	S
6166	2	16.434473	I-26 EB (Basic Analysis)	S
6166	3	16.28543	I-26 EB (Basic Analysis)	S
6166	4	16.208478	I-26 EB (Basic Analysis)	S
6166	5	16.105606	I-26 EB (Basic Analysis)	S
6166	6	16.217388	I-26 EB (Basic Analysis)	S
6166	7	16.347801	I-26 EB (Basic Analysis)	S
6166	8	15.807518	I-26 EB (Basic Analysis)	S
6166	9	15.529682	I-26 EB (Basic Analysis)	S
6166	10	16.789261	I-26 EB (Basic Analysis)	S
6174	1	19.014906	I-26 WB (Basic Analysis)	N
6174	2	19.28489	I-26 WB (Basic Analysis)	N
6174	3	20.524076	I-26 WB (Basic Analysis)	N
6174	4	20.093261	I-26 WB (Basic Analysis)	N
6174	5	20.220343	I-26 WB (Basic Analysis)	N
6174	6	20.183432	I-26 WB (Basic Analysis)	N
6174	7	19.390353	I-26 WB (Basic Analysis)	N
6174	8	19.992017	I-26 WB (Basic Analysis)	N
6174	9	20.182904	I-26 WB (Basic Analysis)	N
6174	10	19.932431	I-26 WB (Basic Analysis)	N
6175	1	19.014906	I-26 WB (Basic Analysis)	N
6175	2	19.28489	I-26 WB (Basic Analysis)	N
6175	3	20.524076	I-26 WB (Basic Analysis)	N
6175	4	20.093261	I-26 WB (Basic Analysis)	N
6175	5	20.220343	I-26 WB (Basic Analysis)	N
6175	6	20.183432	I-26 WB (Basic Analysis)	N
6175	7	19.390353	I-26 WB (Basic Analysis)	N
6175	8	19.992017	I-26 WB (Basic Analysis)	N
6175	9	20.182904	I-26 WB (Basic Analysis)	N
6175	10	19.932431	I-26 WB (Basic Analysis)	N
6177	1	25.140106	I-26 EB (Basic Analysis)	S
6177	2	23.964578	I-26 EB (Basic Analysis)	S
6177	3	25.292947	I-26 EB (Basic Analysis)	S
6177	4	26.261689	I-26 EB (Basic Analysis)	S
6177	5	24.587181	I-26 EB (Basic Analysis)	S
6177	6	23.746555	I-26 EB (Basic Analysis)	S
6177	7	25.158087	I-26 EB (Basic Analysis)	S
6177	8	25.295195	I-26 EB (Basic Analysis)	S
6177	9	25.268222	I-26 EB (Basic Analysis)	S
6177	10	26.843834	I-26 EB (Basic Analysis)	S
6178	1	45.357597	I-26 EB (Diverge Analysis)	S
6178	2	68.535593	I-26 EB (Diverge Analysis)	S
6178	3	50.134701	I-26 EB (Diverge Analysis)	S
6178	4	59.348249	I-26 EB (Diverge Analysis)	S
6178	5	49.175612	I-26 EB (Diverge Analysis)	S
6178	6	64.686133	I-26 EB (Diverge Analysis)	S
6178	7	55.585265	I-26 EB (Diverge Analysis)	S
6178	8	33.969064	I-26 EB (Diverge Analysis)	S
6178	9	47.246951	I-26 EB (Diverge Analysis)	S
6178	10	72.374572	I-26 EB (Diverge Analysis)	S
6185	1	37.89488	I-26 EB (Merge Analysis)	S
6185	2	38.940513	I-26 EB (Merge Analysis)	S

ID	Run	Density	Name (Type)	Direction
6185	3	36.995349	I-26 EB (Merge Analysis)	S
6185	4	40.940107	I-26 EB (Merge Analysis)	S
6185	5	39.948904	I-26 EB (Merge Analysis)	S
6185	6	38.098277	I-26 EB (Merge Analysis)	S
6185	7	40.819787	I-26 EB (Merge Analysis)	S
6185	8	37.003943	I-26 EB (Merge Analysis)	S
6185	9	35.737725	I-26 EB (Merge Analysis)	S
6185	10	39.570757	I-26 EB (Merge Analysis)	S
6186	1	35.605526	I-26 EB (Basic Analysis)	S
6186	2	36.587528	I-26 EB (Basic Analysis)	S
6186	3	36.139569	I-26 EB (Basic Analysis)	S
6186	4	37.988793	I-26 EB (Basic Analysis)	S
6186	5	37.677932	I-26 EB (Basic Analysis)	S
6186	6	36.010443	I-26 EB (Basic Analysis)	S
6186	7	38.387333	I-26 EB (Basic Analysis)	S
6186	8	35.611903	I-26 EB (Basic Analysis)	S
6186	9	34.583671	I-26 EB (Basic Analysis)	S
6186	10	37.53127	I-26 EB (Basic Analysis)	S
6200	1	32.153556	I-26 WB (Weaving Analysis)	NW
6200	2	32.470421	I-26 WB (Weaving Analysis)	NW
6200	3	33.303414	I-26 WB (Weaving Analysis)	NW
6200	4	31.121298	I-26 WB (Weaving Analysis)	NW
6200	5	31.759926	I-26 WB (Weaving Analysis)	NW
6200	6	32.292389	I-26 WB (Weaving Analysis)	NW
6200	7	32.383855	I-26 WB (Weaving Analysis)	NW
6200	8	31.348329	I-26 WB (Weaving Analysis)	NW
6200	9	29.88814	I-26 WB (Weaving Analysis)	NW
6200	10	32.331589	I-26 WB (Weaving Analysis)	NW
6204	1	33.305516	I-26 WB (Basic Analysis)	NW
6204	2	32.134903	I-26 WB (Basic Analysis)	NW
6204	3	33.069822	I-26 WB (Basic Analysis)	NW
6204	4	32.855733	I-26 WB (Basic Analysis)	NW
6204	5	32.164365	I-26 WB (Basic Analysis)	NW
6204	6	32.136867	I-26 WB (Basic Analysis)	NW
6204	7	31.514242	I-26 WB (Basic Analysis)	NW
6204	8	31.239266	I-26 WB (Basic Analysis)	NW
6204	9	33.425327	I-26 WB (Basic Analysis)	NW
6204	10	34.597905	I-26 WB (Basic Analysis)	NW
6205	1	31.603392	I-20 EB (Basic Analysis)	E
6205	2	29.72121	I-20 EB (Basic Analysis)	E
6205	3	31.200857	I-20 EB (Basic Analysis)	E
6205	4	32.328839	I-20 EB (Basic Analysis)	E
6205	5	29.382816	I-20 EB (Basic Analysis)	E
6205	6	28.874118	I-20 EB (Basic Analysis)	E
6205	7	30.227696	I-20 EB (Basic Analysis)	E
6205	8	31.258362	I-20 EB (Basic Analysis)	E
6205	9	29.982194	I-20 EB (Basic Analysis)	E
6205	10	31.096906	I-20 EB (Basic Analysis)	E
6206	1	26.656012	I-20 EB (Merge Analysis)	E
6206	2	27.096607	I-20 EB (Merge Analysis)	E
6206	3	27.822293	I-20 EB (Merge Analysis)	E
6206	4	26.981599	I-20 EB (Merge Analysis)	E
6206	5	27.295847	I-20 EB (Merge Analysis)	E
6206	6	27.840111	I-20 EB (Merge Analysis)	E
6206	7	26.929764	I-20 EB (Merge Analysis)	E
6206	8	26.915185	I-20 EB (Merge Analysis)	E
6206	9	26.641433	I-20 EB (Merge Analysis)	E

No Build AM

ID	Run	Density	Name (Type)	Direction
6206	10	26.730524	I-20 EB (Merge Analysis)	E
6207	1	26.656012	I-20 EB (Merge Analysis)	E
6207	2	27.096607	I-20 EB (Merge Analysis)	E
6207	3	27.822293	I-20 EB (Merge Analysis)	E
6207	4	26.981599	I-20 EB (Merge Analysis)	E
6207	5	27.295847	I-20 EB (Merge Analysis)	E
6207	6	27.840111	I-20 EB (Merge Analysis)	E
6207	7	26.929764	I-20 EB (Merge Analysis)	E
6207	8	26.915185	I-20 EB (Merge Analysis)	E
6207	9	26.641433	I-20 EB (Merge Analysis)	E
6207	10	26.730524	I-20 EB (Merge Analysis)	E
6208	1	27.630287	I-20 EB (Diverge Analysis)	E
6208	2	27.755764	I-20 EB (Diverge Analysis)	E
6208	3	28.783478	I-20 EB (Diverge Analysis)	E
6208	4	27.966386	I-20 EB (Diverge Analysis)	E
6208	5	28.196426	I-20 EB (Diverge Analysis)	E
6208	6	28.457836	I-20 EB (Diverge Analysis)	E
6208	7	27.808046	I-20 EB (Diverge Analysis)	E
6208	8	27.800577	I-20 EB (Diverge Analysis)	E
6208	9	27.706469	I-20 EB (Diverge Analysis)	E
6208	10	27.603399	I-20 EB (Diverge Analysis)	E
6209	1	27.630287	I-20 EB (Diverge Analysis)	E
6209	2	27.755764	I-20 EB (Diverge Analysis)	E
6209	3	28.783478	I-20 EB (Diverge Analysis)	E
6209	4	27.966386	I-20 EB (Diverge Analysis)	E
6209	5	28.196426	I-20 EB (Diverge Analysis)	E
6209	6	28.457836	I-20 EB (Diverge Analysis)	E
6209	7	27.808046	I-20 EB (Diverge Analysis)	E
6209	8	27.800577	I-20 EB (Diverge Analysis)	E
6209	9	27.706469	I-20 EB (Diverge Analysis)	E
6209	10	27.603399	I-20 EB (Diverge Analysis)	E
6216	1	20.840271	I-20 EB (Merge Analysis)	E
6216	2	20.481762	I-20 EB (Merge Analysis)	E
6216	3	21.097462	I-20 EB (Merge Analysis)	E
6216	4	20.926001	I-20 EB (Merge Analysis)	E
6216	5	20.770128	I-20 EB (Merge Analysis)	E
6216	6	20.91561	I-20 EB (Merge Analysis)	E
6216	7	20.577884	I-20 EB (Merge Analysis)	E
6216	8	20.375249	I-20 EB (Merge Analysis)	E
6216	9	21.016927	I-20 EB (Merge Analysis)	E
6216	10	20.481762	I-20 EB (Merge Analysis)	E
6217	1	23.502565	I-20 EB (Basic Analysis)	E
6217	2	24.436051	I-20 EB (Basic Analysis)	E
6217	3	25.133211	I-20 EB (Basic Analysis)	E
6217	4	25.224787	I-20 EB (Basic Analysis)	E
6217	5	26.725454	I-20 EB (Basic Analysis)	E
6217	6	24.468546	I-20 EB (Basic Analysis)	E
6217	7	22.90289	I-20 EB (Basic Analysis)	E
6217	8	24.220404	I-20 EB (Basic Analysis)	E
6217	9	25.198201	I-20 EB (Basic Analysis)	E
6217	10	24.196772	I-20 EB (Basic Analysis)	E
6220	1	18.375564	I-20 WB (Basic Analysis)	W
6220	2	28.872613	I-20 WB (Basic Analysis)	W
6220	3	19.250492	I-20 WB (Basic Analysis)	W
6220	4	18.265157	I-20 WB (Basic Analysis)	W
6220	5	18.858858	I-20 WB (Basic Analysis)	W
6220	6	17.927685	I-20 WB (Basic Analysis)	W

No Build AM

ID	Run	Density	Name (Type)	Direction
6220	7	47.104439	I-20 WB (Basic Analysis)	W
6220	8	18.47139	I-20 WB (Basic Analysis)	W
6220	9	18.015177	I-20 WB (Basic Analysis)	W
6220	10	18.86719	I-20 WB (Basic Analysis)	W
6223	1	60.266105	I-26 EB (Weaving Analysis)	SE
6223	2	68.422617	I-26 EB (Weaving Analysis)	SE
6223	3	67.753247	I-26 EB (Weaving Analysis)	SE
6223	4	54.434428	I-26 EB (Weaving Analysis)	SE
6223	5	65.353313	I-26 EB (Weaving Analysis)	SE
6223	6	62.701956	I-26 EB (Weaving Analysis)	SE
6223	7	59.916727	I-26 EB (Weaving Analysis)	SE
6223	8	54.365858	I-26 EB (Weaving Analysis)	SE
6223	9	61.053022	I-26 EB (Weaving Analysis)	SE
6223	10	61.000779	I-26 EB (Weaving Analysis)	SE
6227	1	24.480014	I-20 WB (Basic Analysis)	W
6227	2	24.788077	I-20 WB (Basic Analysis)	W
6227	3	23.121236	I-20 WB (Basic Analysis)	W
6227	4	22.593128	I-20 WB (Basic Analysis)	W
6227	5	25.789282	I-20 WB (Basic Analysis)	W
6227	6	23.748364	I-20 WB (Basic Analysis)	W
6227	7	27.43687	I-20 WB (Basic Analysis)	W
6227	8	23.4348	I-20 WB (Basic Analysis)	W
6227	9	25.228168	I-20 WB (Basic Analysis)	W
6227	10	24.268221	I-20 WB (Basic Analysis)	W
6229	1	71.538179	I-20 WB (Merge Analysis)	W
6229	2	79.431679	I-20 WB (Merge Analysis)	W
6229	3	72.642913	I-20 WB (Merge Analysis)	W
6229	4	71.199632	I-20 WB (Merge Analysis)	W
6229	5	77.404849	I-20 WB (Merge Analysis)	W
6229	6	66.152603	I-20 WB (Merge Analysis)	W
6229	7	69.081484	I-20 WB (Merge Analysis)	W
6229	8	74.894699	I-20 WB (Merge Analysis)	W
6229	9	77.335803	I-20 WB (Merge Analysis)	W
6229	10	70.3644	I-20 WB (Merge Analysis)	W
6230	1	71.538179	I-20 WB (Merge+Diverge Analysis)	W
6230	2	79.431679	I-20 WB (Merge+Diverge Analysis)	W
6230	3	72.642913	I-20 WB (Merge+Diverge Analysis)	W
6230	4	71.199632	I-20 WB (Merge+Diverge Analysis)	W
6230	5	77.404849	I-20 WB (Merge+Diverge Analysis)	W
6230	6	66.152603	I-20 WB (Merge+Diverge Analysis)	W
6230	7	69.081484	I-20 WB (Merge+Diverge Analysis)	W
6230	8	74.894699	I-20 WB (Merge+Diverge Analysis)	W
6230	9	77.335803	I-20 WB (Merge+Diverge Analysis)	W
6230	10	70.3644	I-20 WB (Merge+Diverge Analysis)	W
6231	1	72.207599	I-20 WB (Diverge Analysis)	W
6231	2	80.174961	I-20 WB (Diverge Analysis)	W
6231	3	73.32267	I-20 WB (Diverge Analysis)	W
6231	4	71.865883	I-20 WB (Diverge Analysis)	W
6231	5	78.17445	I-20 WB (Diverge Analysis)	W
6231	6	66.771627	I-20 WB (Diverge Analysis)	W
6231	7	69.773199	I-20 WB (Diverge Analysis)	W
6231	8	75.595527	I-20 WB (Diverge Analysis)	W
6231	9	78.059474	I-20 WB (Diverge Analysis)	W
6231	10	71.022836	I-20 WB (Diverge Analysis)	W
6234	1	37.18518	I-20 WB (Basic Analysis)	W
6234	2	41.503547	I-20 WB (Basic Analysis)	W
6234	3	38.392428	I-20 WB (Basic Analysis)	W

No Build AM

ID	Run	Density	Name (Type)	Direction
6234	4	35.801545	I-20 WB (Basic Analysis)	W
6234	5	40.730744	I-20 WB (Basic Analysis)	W
6234	6	34.636849	I-20 WB (Basic Analysis)	W
6234	7	37.646391	I-20 WB (Basic Analysis)	W
6234	8	38.950412	I-20 WB (Basic Analysis)	W
6234	9	40.666915	I-20 WB (Basic Analysis)	W
6234	10	35.57643	I-20 WB (Basic Analysis)	W
6238	1	31.299839	I-20 EB (Basic Analysis)	NE
6238	2	29.850434	I-20 EB (Basic Analysis)	NE
6238	3	31.405472	I-20 EB (Basic Analysis)	NE
6238	4	31.33031	I-20 EB (Basic Analysis)	NE
6238	5	30.593927	I-20 EB (Basic Analysis)	NE
6238	6	30.628461	I-20 EB (Basic Analysis)	NE
6238	7	30.832617	I-20 EB (Basic Analysis)	NE
6238	8	31.412582	I-20 EB (Basic Analysis)	NE
6238	9	30.400944	I-20 EB (Basic Analysis)	NE
6238	10	30.729016	I-20 EB (Basic Analysis)	NE
6241	1	38.032039	I-20 EB (Merge Analysis)	NE
6241	2	37.946209	I-20 EB (Merge Analysis)	NE
6241	3	37.871109	I-20 EB (Merge Analysis)	NE
6241	4	38.287144	I-20 EB (Merge Analysis)	NE
6241	5	36.662342	I-20 EB (Merge Analysis)	NE
6241	6	38.672185	I-20 EB (Merge Analysis)	NE
6241	7	35.904181	I-20 EB (Merge Analysis)	NE
6241	8	37.680376	I-20 EB (Merge Analysis)	NE
6241	9	36.535982	I-20 EB (Merge Analysis)	NE
6241	10	36.320216	I-20 EB (Merge Analysis)	NE
6242	1	38.032039	I-20 EB (Merge Analysis)	NE
6242	2	37.946209	I-20 EB (Merge Analysis)	NE
6242	3	37.871109	I-20 EB (Merge Analysis)	NE
6242	4	38.287144	I-20 EB (Merge Analysis)	NE
6242	5	36.662342	I-20 EB (Merge Analysis)	NE
6242	6	38.672185	I-20 EB (Merge Analysis)	NE
6242	7	35.904181	I-20 EB (Merge Analysis)	NE
6242	8	37.680376	I-20 EB (Merge Analysis)	NE
6242	9	36.535982	I-20 EB (Merge Analysis)	NE
6242	10	36.320216	I-20 EB (Merge Analysis)	NE
6246	1	38.955442	I-20 WB (Merge Analysis)	SW
6246	2	30.439198	I-20 WB (Merge Analysis)	SW
6246	3	29.337441	I-20 WB (Merge Analysis)	SW
6246	4	28.152886	I-20 WB (Merge Analysis)	SW
6246	5	30.942667	I-20 WB (Merge Analysis)	SW
6246	6	32.250085	I-20 WB (Merge Analysis)	SW
6246	7	30.878565	I-20 WB (Merge Analysis)	SW
6246	8	29.46431	I-20 WB (Merge Analysis)	SW
6246	9	31.966967	I-20 WB (Merge Analysis)	SW
6246	10	30.477926	I-20 WB (Merge Analysis)	SW
6247	1	38.955442	I-20 WB (Merge Analysis)	SW
6247	2	30.439198	I-20 WB (Merge Analysis)	SW
6247	3	29.337441	I-20 WB (Merge Analysis)	SW
6247	4	28.152886	I-20 WB (Merge Analysis)	SW
6247	5	30.942667	I-20 WB (Merge Analysis)	SW
6247	6	32.250085	I-20 WB (Merge Analysis)	SW
6247	7	30.878565	I-20 WB (Merge Analysis)	SW
6247	8	29.46431	I-20 WB (Merge Analysis)	SW
6247	9	31.966967	I-20 WB (Merge Analysis)	SW
6247	10	30.477926	I-20 WB (Merge Analysis)	SW

No Build AM

ID	Run	Density	Name (Type)	Direction
6249	1	25.860261	I-20 WB (Diverge Analysis)	SW
6249	2	26.237683	I-20 WB (Diverge Analysis)	SW
6249	3	24.950927	I-20 WB (Diverge Analysis)	SW
6249	4	26.241594	I-20 WB (Diverge Analysis)	SW
6249	5	26.750038	I-20 WB (Diverge Analysis)	SW
6249	6	27.041416	I-20 WB (Diverge Analysis)	SW
6249	7	27.512705	I-20 WB (Diverge Analysis)	SW
6249	8	25.38115	I-20 WB (Diverge Analysis)	SW
6249	9	26.094927	I-20 WB (Diverge Analysis)	SW
6249	10	25.212972	I-20 WB (Diverge Analysis)	SW
6251	1	39.353373	I-20 WB (Basic Analysis)	SW
6251	2	34.077943	I-20 WB (Basic Analysis)	SW
6251	3	34.697632	I-20 WB (Basic Analysis)	SW
6251	4	33.941338	I-20 WB (Basic Analysis)	SW
6251	5	35.624061	I-20 WB (Basic Analysis)	SW
6251	6	36.30336	I-20 WB (Basic Analysis)	SW
6251	7	35.586806	I-20 WB (Basic Analysis)	SW
6251	8	32.828629	I-20 WB (Basic Analysis)	SW
6251	9	37.198743	I-20 WB (Basic Analysis)	SW
6251	10	33.7563	I-20 WB (Basic Analysis)	SW
6254	1	34.165007	I-20 EB (Basic Analysis)	NE
6254	2	33.474438	I-20 EB (Basic Analysis)	NE
6254	3	34.345482	I-20 EB (Basic Analysis)	NE
6254	4	34.509665	I-20 EB (Basic Analysis)	NE
6254	5	33.435585	I-20 EB (Basic Analysis)	NE
6254	6	34.261511	I-20 EB (Basic Analysis)	NE
6254	7	34.913228	I-20 EB (Basic Analysis)	NE
6254	8	33.592248	I-20 EB (Basic Analysis)	NE
6254	9	33.309002	I-20 EB (Basic Analysis)	NE
6254	10	33.177405	I-20 EB (Basic Analysis)	NE
6258	1	31.729444	I-20 EB (Merge Analysis)	E
6258	2	30.445654	I-20 EB (Merge Analysis)	E
6258	3	30.839663	I-20 EB (Merge Analysis)	E
6258	4	32.243482	I-20 EB (Merge Analysis)	E
6258	5	29.477593	I-20 EB (Merge Analysis)	E
6258	6	30.855319	I-20 EB (Merge Analysis)	E
6258	7	28.705232	I-20 EB (Merge Analysis)	E
6258	8	32.191295	I-20 EB (Merge Analysis)	E
6258	9	29.803759	I-20 EB (Merge Analysis)	E
6258	10	32.540946	I-20 EB (Merge Analysis)	E
6259	1	33.327964	I-20 EB (Basic Analysis)	E
6259	2	35.030309	I-20 EB (Basic Analysis)	E
6259	3	35.726447	I-20 EB (Basic Analysis)	E
6259	4	34.977111	I-20 EB (Basic Analysis)	E
6259	5	34.241455	I-20 EB (Basic Analysis)	E
6259	6	34.490727	I-20 EB (Basic Analysis)	E
6259	7	34.977111	I-20 EB (Basic Analysis)	E
6259	8	35.791805	I-20 EB (Basic Analysis)	E
6259	9	35.227903	I-20 EB (Basic Analysis)	E
6259	10	35.300861	I-20 EB (Basic Analysis)	E
8539	1	19.331192	I-20 WB (Basic Analysis)	SW
8539	2	18.484272	I-20 WB (Basic Analysis)	SW
8539	3	19.459824	I-20 WB (Basic Analysis)	SW
8539	4	18.203103	I-20 WB (Basic Analysis)	SW
8539	5	19.935648	I-20 WB (Basic Analysis)	SW
8539	6	19.235572	I-20 WB (Basic Analysis)	SW
8539	7	19.345991	I-20 WB (Basic Analysis)	SW

No Build AM

ID	Run	Density	Name (Type)	Direction
8539	8	17.838836	I-20 WB (Basic Analysis)	SW
8539	9	18.329458	I-20 WB (Basic Analysis)	SW
8539	10	18.05512	I-20 WB (Basic Analysis)	SW
8542	1	75.797566	I-20 EB (Basic Analysis)	NE
8542	2	74.877485	I-20 EB (Basic Analysis)	NE
8542	3	75.407772	I-20 EB (Basic Analysis)	NE
8542	4	75.679791	I-20 EB (Basic Analysis)	NE
8542	5	72.789816	I-20 EB (Basic Analysis)	NE
8542	6	75.955397	I-20 EB (Basic Analysis)	NE
8542	7	73.056455	I-20 EB (Basic Analysis)	NE
8542	8	79.769039	I-20 EB (Basic Analysis)	NE
8542	9	77.143311	I-20 EB (Basic Analysis)	NE
8542	10	78.553624	I-20 EB (Basic Analysis)	NE
8543	1	72.676244	I-20 EB (Diverge Analysis)	NE
8543	2	71.180245	I-20 EB (Diverge Analysis)	NE
8543	3	71.755178	I-20 EB (Diverge Analysis)	NE
8543	4	70.728512	I-20 EB (Diverge Analysis)	NE
8543	5	69.892512	I-20 EB (Diverge Analysis)	NE
8543	6	70.795979	I-20 EB (Diverge Analysis)	NE
8543	7	69.813313	I-20 EB (Diverge Analysis)	NE
8543	8	74.747177	I-20 EB (Diverge Analysis)	NE
8543	9	72.300778	I-20 EB (Diverge Analysis)	NE
8543	10	72.145312	I-20 EB (Diverge Analysis)	NE
8551	1	38.787455	I-26 WB (Diverge Analysis)	NW
8551	2	36.742922	I-26 WB (Diverge Analysis)	NW
8551	3	38.256522	I-26 WB (Diverge Analysis)	NW
8551	4	74.005044	I-26 WB (Diverge Analysis)	NW
8551	5	39.811188	I-26 WB (Diverge Analysis)	NW
8551	6	39.083721	I-26 WB (Diverge Analysis)	NW
8551	7	38.813855	I-26 WB (Diverge Analysis)	NW
8551	8	39.303722	I-26 WB (Diverge Analysis)	NW
8551	9	37.790122	I-26 WB (Diverge Analysis)	NW
8551	10	38.309322	I-26 WB (Diverge Analysis)	NW
8552	1	83.911979	I-26 EB (Basic Analysis)	SE
8552	2	91.58934	I-26 EB (Basic Analysis)	SE
8552	3	81.859387	I-26 EB (Basic Analysis)	SE
8552	4	83.671955	I-26 EB (Basic Analysis)	SE
8552	5	86.787146	I-26 EB (Basic Analysis)	SE
8552	6	82.051577	I-26 EB (Basic Analysis)	SE
8552	7	79.318204	I-26 EB (Basic Analysis)	SE
8552	8	85.916737	I-26 EB (Basic Analysis)	SE
8552	9	80.120278	I-26 EB (Basic Analysis)	SE
8552	10	89.776772	I-26 EB (Basic Analysis)	SE
8553	1	31.128966	I-26 EB (Basic Analysis)	S
8553	2	49.757178	I-26 EB (Basic Analysis)	S
8553	3	37.581403	I-26 EB (Basic Analysis)	S
8553	4	41.604073	I-26 EB (Basic Analysis)	S
8553	5	31.423636	I-26 EB (Basic Analysis)	S
8553	6	40.01117	I-26 EB (Basic Analysis)	S
8553	7	38.699466	I-26 EB (Basic Analysis)	S
8553	8	27.71921	I-26 EB (Basic Analysis)	S
8553	9	31.389959	I-26 EB (Basic Analysis)	S
8553	10	57.137404	I-26 EB (Basic Analysis)	S
8554	1	23.324409	I-26 WB (Basic Analysis)	N
8554	2	23.999829	I-26 WB (Basic Analysis)	N
8554	3	23.363823	I-26 WB (Basic Analysis)	N
8554	4	23.768717	I-26 WB (Basic Analysis)	N

No Build AM

ID	Run	Density	Name (Type)	Direction
8554	5	22.665112	I-26 WB (Basic Analysis)	N
8554	6	22.720651	I-26 WB (Basic Analysis)	N
8554	7	22.992969	I-26 WB (Basic Analysis)	N
8554	8	22.99476	I-26 WB (Basic Analysis)	N
8554	9	22.303216	I-26 WB (Basic Analysis)	N
8554	10	23.310076	I-26 WB (Basic Analysis)	N
8559	1	17.315461	I-126 NB (Diverge Analysis)	W
8559	2	15.942662	I-126 NB (Diverge Analysis)	W
8559	3	16.502928	I-126 NB (Diverge Analysis)	W
8559	4	15.118395	I-126 NB (Diverge Analysis)	W
8559	5	15.954395	I-126 NB (Diverge Analysis)	W
8559	6	15.364795	I-126 NB (Diverge Analysis)	W
8559	7	17.643995	I-126 NB (Diverge Analysis)	W
8559	8	15.089062	I-126 NB (Diverge Analysis)	W
8559	9	16.127462	I-126 NB (Diverge Analysis)	W
8559	10	15.945595	I-126 NB (Diverge Analysis)	W
8560	1	26.984066	I-126 SB (Basic Analysis)	E
8560	2	26.716933	I-126 SB (Basic Analysis)	E
8560	3	26.861808	I-126 SB (Basic Analysis)	E
8560	4	26.820241	I-126 SB (Basic Analysis)	E
8560	5	26.242574	I-126 SB (Basic Analysis)	E
8560	6	27.148502	I-126 SB (Basic Analysis)	E
8560	7	26.712043	I-126 SB (Basic Analysis)	E
8560	8	26.576948	I-126 SB (Basic Analysis)	E
8560	9	27.391795	I-126 SB (Basic Analysis)	E
8560	10	26.85325	I-126 SB (Basic Analysis)	E
8658	1	57.865408	I-20 WB (Basic Analysis)	SW
8658	2	40.718338	I-20 WB (Basic Analysis)	SW
8658	3	43.750336	I-20 WB (Basic Analysis)	SW
8658	4	42.334765	I-20 WB (Basic Analysis)	SW
8658	5	48.998135	I-20 WB (Basic Analysis)	SW
8658	6	49.33396	I-20 WB (Basic Analysis)	SW
8658	7	45.838136	I-20 WB (Basic Analysis)	SW
8658	8	39.3167	I-20 WB (Basic Analysis)	SW
8658	9	53.29361	I-20 WB (Basic Analysis)	SW
8658	10	45.639602	I-20 WB (Basic Analysis)	SW
8659	1	38.864907	I-20 EB (Basic Analysis)	NE
8659	2	39.359037	I-20 EB (Basic Analysis)	NE
8659	3	40.356203	I-20 EB (Basic Analysis)	NE
8659	4	39.594093	I-20 EB (Basic Analysis)	NE
8659	5	39.382786	I-20 EB (Basic Analysis)	NE
8659	6	40.378332	I-20 EB (Basic Analysis)	NE
8659	7	39.116425	I-20 EB (Basic Analysis)	NE
8659	8	39.671276	I-20 EB (Basic Analysis)	NE
8659	9	38.730243	I-20 EB (Basic Analysis)	NE
8659	10	39.321526	I-20 EB (Basic Analysis)	NE
8763	1	73.313244	I-26 EB (Basic Analysis)	SE
8763	2	67.62363	I-26 EB (Basic Analysis)	SE
8763	3	66.625843	I-26 EB (Basic Analysis)	SE
8763	4	74.422801	I-26 EB (Basic Analysis)	SE
8763	5	69.533154	I-26 EB (Basic Analysis)	SE
8763	6	63.980267	I-26 EB (Basic Analysis)	SE
8763	7	69.208154	I-26 EB (Basic Analysis)	SE
8763	8	64.050259	I-26 EB (Basic Analysis)	SE
8763	9	73.814254	I-26 EB (Basic Analysis)	SE
8763	10	67.686569	I-26 EB (Basic Analysis)	SE
8764	1	14.428174	I-20 WB (Basic Analysis)	S

No Build AM

ID	Run	Density	Name (Type)	Direction
8764	2	13.859158	I-20 WB (Basic Analysis)	S
8764	3	14.150978	I-20 WB (Basic Analysis)	S
8764	4	13.47664	I-20 WB (Basic Analysis)	S
8764	5	14.766198	I-20 WB (Basic Analysis)	S
8764	6	14.851557	I-20 WB (Basic Analysis)	S
8764	7	14.26055	I-20 WB (Basic Analysis)	S
8764	8	13.773373	I-20 WB (Basic Analysis)	S
8764	9	14.163176	I-20 WB (Basic Analysis)	S
8764	10	14.256332	I-20 WB (Basic Analysis)	S
8765	1	66.363772	I-20 EB (Basic Analysis)	NE
8765	2	55.198165	I-20 EB (Basic Analysis)	NE
8765	3	66.658498	I-20 EB (Basic Analysis)	NE
8765	4	62.684211	I-20 EB (Basic Analysis)	NE
8765	5	61.632874	I-20 EB (Basic Analysis)	NE
8765	6	57.478226	I-20 EB (Basic Analysis)	NE
8765	7	55.129925	I-20 EB (Basic Analysis)	NE
8765	8	69.131416	I-20 EB (Basic Analysis)	NE
8765	9	60.147247	I-20 EB (Basic Analysis)	NE
8765	10	63.032819	I-20 EB (Basic Analysis)	NE
8770	1	41.389321	I-20 WB (Diverge Analysis)	SW
8770	2	38.981055	I-20 WB (Diverge Analysis)	SW
8770	3	41.016787	I-20 WB (Diverge Analysis)	SW
8770	4	38.549855	I-20 WB (Diverge Analysis)	SW
8770	5	41.377588	I-20 WB (Diverge Analysis)	SW
8770	6	40.925854	I-20 WB (Diverge Analysis)	SW
8770	7	39.614655	I-20 WB (Diverge Analysis)	SW
8770	8	38.013055	I-20 WB (Diverge Analysis)	SW
8770	9	42.471721	I-20 WB (Diverge Analysis)	SW
8770	10	40.975721	I-20 WB (Diverge Analysis)	SW
8773	1	29.160722	I-26 WB (Basic Analysis)	N
8773	2	27.324917	I-26 WB (Basic Analysis)	N
8773	3	28.988339	I-26 WB (Basic Analysis)	N
8773	4	58.213889	I-26 WB (Basic Analysis)	N
8773	5	52.379387	I-26 WB (Basic Analysis)	N
8773	6	29.392039	I-26 WB (Basic Analysis)	N
8773	7	32.313711	I-26 WB (Basic Analysis)	N
8773	8	55.931657	I-26 WB (Basic Analysis)	N
8773	9	26.028361	I-26 WB (Basic Analysis)	N
8773	10	26.952157	I-26 WB (Basic Analysis)	N
8774	1	38.952577	I-20 EB (Diverge Analysis)	NE
8774	2	39.746008	I-20 EB (Diverge Analysis)	NE
8774	3	39.62284	I-20 EB (Diverge Analysis)	NE
8774	4	40.098325	I-20 EB (Diverge Analysis)	NE
8774	5	38.737749	I-20 EB (Diverge Analysis)	NE
8774	6	40.943315	I-20 EB (Diverge Analysis)	NE
8774	7	37.268327	I-20 EB (Diverge Analysis)	NE
8774	8	40.78291	I-20 EB (Diverge Analysis)	NE
8774	9	40.906078	I-20 EB (Diverge Analysis)	NE
8774	10	40.542303	I-20 EB (Diverge Analysis)	NE
8783	1	14.73989	I-26 WB (Basic Analysis)	NW
8783	2	14.997306	I-26 WB (Basic Analysis)	NW
8783	3	15.159383	I-26 WB (Basic Analysis)	NW
8783	4	13.815857	I-26 WB (Basic Analysis)	NW
8783	5	14.989072	I-26 WB (Basic Analysis)	NW
8783	6	15.169675	I-26 WB (Basic Analysis)	NW
8783	7	14.806736	I-26 WB (Basic Analysis)	NW
8783	8	14.703163	I-26 WB (Basic Analysis)	NW

No Build AM

ID	Run	Density	Name (Type)	Direction
8783	9	15.354503	I-26 WB (Basic Analysis)	NW
8783	10	15.335869	I-26 WB (Basic Analysis)	NW
8784	1	122.018909	I-26 EB (Basic Analysis)	SE
8784	2	120.861234	I-26 EB (Basic Analysis)	SE
8784	3	115.66516	I-26 EB (Basic Analysis)	SE
8784	4	113.075199	I-26 EB (Basic Analysis)	SE
8784	5	112.488285	I-26 EB (Basic Analysis)	SE
8784	6	118.055892	I-26 EB (Basic Analysis)	SE
8784	7	116.908987	I-26 EB (Basic Analysis)	SE
8784	8	115.869772	I-26 EB (Basic Analysis)	SE
8784	9	118.255121	I-26 EB (Basic Analysis)	SE
8784	10	119.445103	I-26 EB (Basic Analysis)	SE
8817	1	16.173466	I-26 WB (Basic Analysis)	NW
8817	2	16.387979	I-26 WB (Basic Analysis)	NW
8817	3	16.257682	I-26 WB (Basic Analysis)	NW
8817	4	14.675849	I-26 WB (Basic Analysis)	NW
8817	5	16.463455	I-26 WB (Basic Analysis)	NW
8817	6	17.067269	I-26 WB (Basic Analysis)	NW
8817	7	15.254239	I-26 WB (Basic Analysis)	NW
8817	8	16.33157	I-26 WB (Basic Analysis)	NW
8817	9	16.353816	I-26 WB (Basic Analysis)	NW
8817	10	16.046347	I-26 WB (Basic Analysis)	NW

No Build PM

ID	Run	Density	Name (Type)	Direction
2466	1	32.365493	I-20 EB (Weaving Analysis)	E
2466	2	31.912195	I-20 EB (Weaving Analysis)	E
2466	3	34.536792	I-20 EB (Weaving Analysis)	E
2466	4	34.133357	I-20 EB (Weaving Analysis)	E
2466	5	33.476074	I-20 EB (Weaving Analysis)	E
2466	6	32.175108	I-20 EB (Weaving Analysis)	E
2466	7	50.62888	I-20 EB (Weaving Analysis)	E
2466	8	37.8776	I-20 EB (Weaving Analysis)	E
2466	9	38.924719	I-20 EB (Weaving Analysis)	E
2466	10	53.928891	I-20 EB (Weaving Analysis)	E
2467	1	26.700597	I-20 WB (Weaving Analysis)	W
2467	2	23.873347	I-20 WB (Weaving Analysis)	W
2467	3	23.644111	I-20 WB (Weaving Analysis)	W
2467	4	22.967317	I-20 WB (Weaving Analysis)	W
2467	5	20.729532	I-20 WB (Weaving Analysis)	W
2467	6	21.651936	I-20 WB (Weaving Analysis)	W
2467	7	22.81995	I-20 WB (Weaving Analysis)	W
2467	8	22.077661	I-20 WB (Weaving Analysis)	W
2467	9	25.26514	I-20 WB (Weaving Analysis)	W
2467	10	22.470638	I-20 WB (Weaving Analysis)	W
2806	1	19.561025	I-20 EB (Basic Analysis)	NE
2806	2	20.16503	I-20 EB (Basic Analysis)	NE
2806	3	18.956959	I-20 EB (Basic Analysis)	NE
2806	4	19.403031	I-20 EB (Basic Analysis)	NE
2806	5	18.846363	I-20 EB (Basic Analysis)	NE
2806	6	19.526886	I-20 EB (Basic Analysis)	NE
2806	7	20.497263	I-20 EB (Basic Analysis)	NE
2806	8	20.370314	I-20 EB (Basic Analysis)	NE
2806	9	20.01817	I-20 EB (Basic Analysis)	NE
2806	10	18.994295	I-20 EB (Basic Analysis)	NE
2807	1	19.561025	I-20 EB (Basic Analysis)	NE
2807	2	20.16503	I-20 EB (Basic Analysis)	NE
2807	3	18.956959	I-20 EB (Basic Analysis)	NE
2807	4	19.403031	I-20 EB (Basic Analysis)	NE
2807	5	18.846363	I-20 EB (Basic Analysis)	NE
2807	6	19.526886	I-20 EB (Basic Analysis)	NE
2807	7	20.497263	I-20 EB (Basic Analysis)	NE
2807	8	20.370314	I-20 EB (Basic Analysis)	NE
2807	9	20.01817	I-20 EB (Basic Analysis)	NE
2807	10	18.994295	I-20 EB (Basic Analysis)	NE
2808	1	17.79826	I-20 EB (Diverge Analysis)	NE
2808	2	19.603978	I-20 EB (Diverge Analysis)	NE
2808	3	17.624296	I-20 EB (Diverge Analysis)	NE
2808	4	18.221707	I-20 EB (Diverge Analysis)	NE
2808	5	18.305318	I-20 EB (Diverge Analysis)	NE
2808	6	18.765176	I-20 EB (Diverge Analysis)	NE
2808	7	20.628882	I-20 EB (Diverge Analysis)	NE
2808	8	18.693702	I-20 EB (Diverge Analysis)	NE
2808	9	18.726068	I-20 EB (Diverge Analysis)	NE
2808	10	17.521806	I-20 EB (Diverge Analysis)	NE
2813	1	18.100465	I-20 WB (Merge Analysis)	S
2813	2	18.063039	I-20 WB (Merge Analysis)	S
2813	3	17.023844	I-20 WB (Merge Analysis)	S
2813	4	16.917803	I-20 WB (Merge Analysis)	S
2813	5	17.500402	I-20 WB (Merge Analysis)	S
2813	6	16.78806	I-20 WB (Merge Analysis)	S
2813	7	17.279588	I-20 WB (Merge Analysis)	S
2813	8	16.544791	I-20 WB (Merge Analysis)	S
2813	9	16.896595	I-20 WB (Merge Analysis)	S
2813	10	17.325747	I-20 WB (Merge Analysis)	S
2814	1	22.674304	I-20 WB (Basic Analysis)	S
2814	2	21.972839	I-20 WB (Basic Analysis)	S
2814	3	22.226837	I-20 WB (Basic Analysis)	S
2814	4	21.800273	I-20 WB (Basic Analysis)	S

No Build PM

ID	Run	Density	Name (Type)	Direction
2814	5	22.564077	I-20 WB (Basic Analysis)	S
2814	6	21.493974	I-20 WB (Basic Analysis)	S
2814	7	21.756585	I-20 WB (Basic Analysis)	S
2814	8	21.705806	I-20 WB (Basic Analysis)	S
2814	9	22.562877	I-20 WB (Basic Analysis)	S
2814	10	21.891511	I-20 WB (Basic Analysis)	S
2815	1	22.674304	I-20 WB (Basic Analysis)	S
2815	2	21.972839	I-20 WB (Basic Analysis)	S
2815	3	22.226837	I-20 WB (Basic Analysis)	S
2815	4	21.800273	I-20 WB (Basic Analysis)	S
2815	5	22.564077	I-20 WB (Basic Analysis)	S
2815	6	21.493974	I-20 WB (Basic Analysis)	S
2815	7	21.756585	I-20 WB (Basic Analysis)	S
2815	8	21.705806	I-20 WB (Basic Analysis)	S
2815	9	22.562877	I-20 WB (Basic Analysis)	S
2815	10	21.891511	I-20 WB (Basic Analysis)	S
2822	1	13.555633	I-20 WB (Merge Analysis)	SW
2822	2	13.650803	I-20 WB (Merge Analysis)	SW
2822	3	12.721064	I-20 WB (Merge Analysis)	SW
2822	4	13.753293	I-20 WB (Merge Analysis)	SW
2822	5	14.119332	I-20 WB (Merge Analysis)	SW
2822	6	13.087103	I-20 WB (Merge Analysis)	SW
2822	7	13.924112	I-20 WB (Merge Analysis)	SW
2822	8	13.040738	I-20 WB (Merge Analysis)	SW
2822	9	14.600063	I-20 WB (Merge Analysis)	SW
2822	10	14.343836	I-20 WB (Merge Analysis)	SW
2823	1	1691.124447	I-20 WB (Basic Analysis)	SW
2823	2	781.416121	I-20 WB (Basic Analysis)	SW
2823	3	1271.25907	I-20 WB (Basic Analysis)	SW
2823	4	1399.551261	I-20 WB (Basic Analysis)	SW
2823	5	1562.832251	I-20 WB (Basic Analysis)	SW
2823	6	2006.023486	I-20 WB (Basic Analysis)	SW
2823	7	1329.573706	I-20 WB (Basic Analysis)	SW
2823	8	1107.978088	I-20 WB (Basic Analysis)	SW
2823	9	2635.821549	I-20 WB (Basic Analysis)	SW
2823	10	3568.855729	I-20 WB (Basic Analysis)	SW
2826	1	18.414667	I-20 EB (Basic Analysis)	NE
2826	2	18.455668	I-20 EB (Basic Analysis)	NE
2826	3	18.105797	I-20 EB (Basic Analysis)	NE
2826	4	18.226065	I-20 EB (Basic Analysis)	NE
2826	5	17.099919	I-20 EB (Basic Analysis)	NE
2826	6	20.500223	I-20 EB (Basic Analysis)	NE
2826	7	20.336221	I-20 EB (Basic Analysis)	NE
2826	8	20.880161	I-20 EB (Basic Analysis)	NE
2826	9	18.950406	I-20 EB (Basic Analysis)	NE
2826	10	17.796927	I-20 EB (Basic Analysis)	NE
2829	1	18.367332	I-20 EB (Merge Analysis)	NE
2829	2	18.193775	I-20 EB (Merge Analysis)	NE
2829	3	19.036768	I-20 EB (Merge Analysis)	NE
2829	4	18.015259	I-20 EB (Merge Analysis)	NE
2829	5	17.422684	I-20 EB (Merge Analysis)	NE
2829	6	18.508657	I-20 EB (Merge Analysis)	NE
2829	7	17.001187	I-20 EB (Merge Analysis)	NE
2829	8	19.066521	I-20 EB (Merge Analysis)	NE
2829	9	19.716121	I-20 EB (Merge Analysis)	NE
2829	10	18.240883	I-20 EB (Merge Analysis)	NE
2830	1	28.330932	I-20 EB (Basic Analysis)	NE
2830	2	27.143329	I-20 EB (Basic Analysis)	NE
2830	3	25.836966	I-20 EB (Basic Analysis)	NE
2830	4	23.184652	I-20 EB (Basic Analysis)	NE
2830	5	23.13187	I-20 EB (Basic Analysis)	NE
2830	6	26.417572	I-20 EB (Basic Analysis)	NE
2830	7	23.884019	I-20 EB (Basic Analysis)	NE
2830	8	22.736002	I-20 EB (Basic Analysis)	NE

No Build PM

ID	Run	Density	Name (Type)	Direction
2830	9	28.739996	I-20 EB (Basic Analysis)	NE
2830	10	25.348729	I-20 EB (Basic Analysis)	NE
2831	1	22.530524	I-20 WB (Basic Analysis)	SW
2831	2	21.161031	I-20 WB (Basic Analysis)	SW
2831	3	22.526042	I-20 WB (Basic Analysis)	SW
2831	4	20.717234	I-20 WB (Basic Analysis)	SW
2831	5	21.696725	I-20 WB (Basic Analysis)	SW
2831	6	20.040332	I-20 WB (Basic Analysis)	SW
2831	7	20.811373	I-20 WB (Basic Analysis)	SW
2831	8	21.559999	I-20 WB (Basic Analysis)	SW
2831	9	21.761725	I-20 WB (Basic Analysis)	SW
2831	10	20.862925	I-20 WB (Basic Analysis)	SW
2837	1	20.682626	I-20 WB (Merge Analysis)	SW
2837	2	19.258223	I-20 WB (Merge Analysis)	SW
2837	3	22.222182	I-20 WB (Merge Analysis)	SW
2837	4	22.107029	I-20 WB (Merge Analysis)	SW
2837	5	20.937967	I-20 WB (Merge Analysis)	SW
2837	6	21.7115	I-20 WB (Merge Analysis)	SW
2837	7	20.765236	I-20 WB (Merge Analysis)	SW
2837	8	21.190805	I-20 WB (Merge Analysis)	SW
2837	9	20.973014	I-20 WB (Merge Analysis)	SW
2837	10	20.081824	I-20 WB (Merge Analysis)	SW
2838	1	86.579623	I-20 WB (Basic Analysis)	SW
2838	2	62.189785	I-20 WB (Basic Analysis)	SW
2838	3	64.530076	I-20 WB (Basic Analysis)	SW
2838	4	44.488806	I-20 WB (Basic Analysis)	SW
2838	5	48.037707	I-20 WB (Basic Analysis)	SW
2838	6	36.181381	I-20 WB (Basic Analysis)	SW
2838	7	43.642576	I-20 WB (Basic Analysis)	SW
2838	8	48.047829	I-20 WB (Basic Analysis)	SW
2838	9	52.393361	I-20 WB (Basic Analysis)	SW
2838	10	46.926271	I-20 WB (Basic Analysis)	SW
2839	1	116.07526	I-20 WB (Diverge Analysis)	SW
2839	2	89.014398	I-20 WB (Diverge Analysis)	SW
2839	3	92.640332	I-20 WB (Diverge Analysis)	SW
2839	4	80.173979	I-20 WB (Diverge Analysis)	SW
2839	5	94.536508	I-20 WB (Diverge Analysis)	SW
2839	6	65.42818	I-20 WB (Diverge Analysis)	SW
2839	7	91.783018	I-20 WB (Diverge Analysis)	SW
2839	8	100.497362	I-20 WB (Diverge Analysis)	SW
2839	9	91.15264	I-20 WB (Diverge Analysis)	SW
2839	10	88.462188	I-20 WB (Diverge Analysis)	SW
2840	1	116.07526	I-20 WB (Diverge Analysis)	SW
2840	2	89.014398	I-20 WB (Diverge Analysis)	SW
2840	3	92.640332	I-20 WB (Diverge Analysis)	SW
2840	4	80.173979	I-20 WB (Diverge Analysis)	SW
2840	5	94.536508	I-20 WB (Diverge Analysis)	SW
2840	6	65.42818	I-20 WB (Diverge Analysis)	SW
2840	7	91.783018	I-20 WB (Diverge Analysis)	SW
2840	8	100.497362	I-20 WB (Diverge Analysis)	SW
2840	9	91.15264	I-20 WB (Diverge Analysis)	SW
2840	10	88.462188	I-20 WB (Diverge Analysis)	SW
2843	1	19.945524	I-20 EB (Merge Analysis)	NE
2843	2	22.27259	I-20 EB (Merge Analysis)	NE
2843	3	19.589828	I-20 EB (Merge Analysis)	NE
2843	4	21.943439	I-20 EB (Merge Analysis)	NE
2843	5	21.617826	I-20 EB (Merge Analysis)	NE
2843	6	21.343533	I-20 EB (Merge Analysis)	NE
2843	7	21.256821	I-20 EB (Merge Analysis)	NE
2843	8	21.605439	I-20 EB (Merge Analysis)	NE
2843	9	21.117021	I-20 EB (Merge Analysis)	NE
2843	10	19.135032	I-20 EB (Merge Analysis)	NE
2844	1	19.945524	I-20 EB (Merge Analysis)	NE
2844	2	22.27259	I-20 EB (Merge Analysis)	NE

No Build PM

ID	Run	Density	Name (Type)	Direction
2844	3	19.589828	I-20 EB (Merge Analysis)	NE
2844	4	21.943439	I-20 EB (Merge Analysis)	NE
2844	5	21.617826	I-20 EB (Merge Analysis)	NE
2844	6	21.343533	I-20 EB (Merge Analysis)	NE
2844	7	21.256821	I-20 EB (Merge Analysis)	NE
2844	8	21.605439	I-20 EB (Merge Analysis)	NE
2844	9	21.117021	I-20 EB (Merge Analysis)	NE
2844	10	19.135032	I-20 EB (Merge Analysis)	NE
2848	1	22.516146	I-20 EB (Basic Analysis)	NE
2848	2	20.701516	I-20 EB (Basic Analysis)	NE
2848	3	21.62832	I-20 EB (Basic Analysis)	NE
2848	4	22.68505	I-20 EB (Basic Analysis)	NE
2848	5	21.530875	I-20 EB (Basic Analysis)	NE
2848	6	21.55253	I-20 EB (Basic Analysis)	NE
2848	7	21.180076	I-20 EB (Basic Analysis)	NE
2848	8	22.838796	I-20 EB (Basic Analysis)	NE
2848	9	22.70887	I-20 EB (Basic Analysis)	NE
2848	10	20.469814	I-20 EB (Basic Analysis)	NE
2852	1	21.669861	I-20 WB (Basic Analysis)	SW
2852	2	22.520838	I-20 WB (Basic Analysis)	SW
2852	3	23.311729	I-20 WB (Basic Analysis)	SW
2852	4	20.095066	I-20 WB (Basic Analysis)	SW
2852	5	22.302854	I-20 WB (Basic Analysis)	SW
2852	6	21.808198	I-20 WB (Basic Analysis)	SW
2852	7	19.404782	I-20 WB (Basic Analysis)	SW
2852	8	20.881765	I-20 WB (Basic Analysis)	SW
2852	9	23.332689	I-20 WB (Basic Analysis)	SW
2852	10	19.579449	I-20 WB (Basic Analysis)	SW
2856	1	21.476578	I-20 EB (Basic Analysis)	NE
2856	2	19.517859	I-20 EB (Basic Analysis)	NE
2856	3	18.707022	I-20 EB (Basic Analysis)	NE
2856	4	20.952712	I-20 EB (Basic Analysis)	NE
2856	5	17.480174	I-20 EB (Basic Analysis)	NE
2856	6	19.612232	I-20 EB (Basic Analysis)	NE
2856	7	22.401047	I-20 EB (Basic Analysis)	NE
2856	8	19.213554	I-20 EB (Basic Analysis)	NE
2856	9	20.476996	I-20 EB (Basic Analysis)	NE
2856	10	19.487043	I-20 EB (Basic Analysis)	NE
2859	1	58.015845	I-20 WB (Weaving Analysis)	SW
2859	2	73.101742	I-20 WB (Weaving Analysis)	SW
2859	3	81.76095	I-20 WB (Weaving Analysis)	SW
2859	4	46.675499	I-20 WB (Weaving Analysis)	SW
2859	5	55.400307	I-20 WB (Weaving Analysis)	SW
2859	6	69.83232	I-20 WB (Weaving Analysis)	SW
2859	7	29.492516	I-20 WB (Weaving Analysis)	SW
2859	8	61.219667	I-20 WB (Weaving Analysis)	SW
2859	9	63.024727	I-20 WB (Weaving Analysis)	SW
2859	10	24.405338	I-20 WB (Weaving Analysis)	SW
2863	1	55.202557	I-20 EB (Merge Analysis)	E
2863	2	16.990198	I-20 EB (Merge Analysis)	E
2863	3	26.449115	I-20 EB (Merge Analysis)	E
2863	4	51.292733	I-20 EB (Merge Analysis)	E
2863	5	25.95032	I-20 EB (Merge Analysis)	E
2863	6	15.849725	I-20 EB (Merge Analysis)	E
2863	7	47.330951	I-20 EB (Merge Analysis)	E
2863	8	15.95364	I-20 EB (Merge Analysis)	E
2863	9	16.057556	I-20 EB (Merge Analysis)	E
2863	10	21.549495	I-20 EB (Merge Analysis)	E
4563	1	9.591997	I-126 SB (Merge Analysis)	E
4563	2	9.662397	I-126 SB (Merge Analysis)	E
4563	3	11.008797	I-126 SB (Merge Analysis)	E
4563	4	10.997063	I-126 SB (Merge Analysis)	E
4563	5	10.777063	I-126 SB (Merge Analysis)	E
4563	6	11.219997	I-126 SB (Merge Analysis)	E

ID	Run	Density	Name (Type)	Direction
4563	7	9.650664	I-126 SB (Merge Analysis)	E
4563	8	10.565863	I-126 SB (Merge Analysis)	E
4563	9	10.750664	I-126 SB (Merge Analysis)	E
4563	10	9.899997	I-126 SB (Merge Analysis)	E
4566	1	78.400773	I-126 NB (Basic Analysis)	W
4566	2	89.642545	I-126 NB (Basic Analysis)	W
4566	3	84.44051	I-126 NB (Basic Analysis)	W
4566	4	90.279908	I-126 NB (Basic Analysis)	W
4566	5	82.783702	I-126 NB (Basic Analysis)	W
4566	6	96.148892	I-126 NB (Basic Analysis)	W
4566	7	90.865708	I-126 NB (Basic Analysis)	W
4566	8	84.108302	I-126 NB (Basic Analysis)	W
4566	9	84.794694	I-126 NB (Basic Analysis)	W
4566	10	91.970528	I-126 NB (Basic Analysis)	W
4570	1	107.755361	I-126 NB (Basic Analysis)	NW
4570	2	116.622365	I-126 NB (Basic Analysis)	NW
4570	3	114.388038	I-126 NB (Basic Analysis)	NW
4570	4	118.18699	I-126 NB (Basic Analysis)	NW
4570	5	109.66318	I-126 NB (Basic Analysis)	NW
4570	6	120.300962	I-126 NB (Basic Analysis)	NW
4570	7	116.996541	I-126 NB (Basic Analysis)	NW
4570	8	111.431576	I-126 NB (Basic Analysis)	NW
4570	9	115.138772	I-126 NB (Basic Analysis)	NW
4570	10	115.918105	I-126 NB (Basic Analysis)	NW
4573	1	11.99472	I-126 SB (Basic Analysis)	E
4573	2	13.283798	I-126 SB (Basic Analysis)	E
4573	3	12.403452	I-126 SB (Basic Analysis)	E
4573	4	13.556287	I-126 SB (Basic Analysis)	E
4573	5	12.00258	I-126 SB (Basic Analysis)	E
4573	6	13.464584	I-126 SB (Basic Analysis)	E
4573	7	13.089913	I-126 SB (Basic Analysis)	E
4573	8	11.963279	I-126 SB (Basic Analysis)	E
4573	9	13.797334	I-126 SB (Basic Analysis)	E
4573	10	14.01742	I-126 SB (Basic Analysis)	E
4578	1	13.95732	I-126 SB (Basic Analysis)	E
4578	2	14.800708	I-126 SB (Basic Analysis)	E
4578	3	14.440705	I-126 SB (Basic Analysis)	E
4578	4	13.822107	I-126 SB (Basic Analysis)	E
4578	5	14.140702	I-126 SB (Basic Analysis)	E
4578	6	14.452536	I-126 SB (Basic Analysis)	E
4578	7	14.38662	I-126 SB (Basic Analysis)	E
4578	8	19.902448	I-126 SB (Basic Analysis)	E
4578	9	14.455916	I-126 SB (Basic Analysis)	E
4578	10	15.1886	I-126 SB (Basic Analysis)	E
4579	1	10.9803	I-126 SB (Diverge Analysis)	E
4579	2	11.63143	I-126 SB (Diverge Analysis)	E
4579	3	9.568211	I-126 SB (Diverge Analysis)	E
4579	4	10.331786	I-126 SB (Diverge Analysis)	E
4579	5	11.435307	I-126 SB (Diverge Analysis)	E
4579	6	11.963533	I-126 SB (Diverge Analysis)	E
4579	7	12.520524	I-126 SB (Diverge Analysis)	E
4579	8	68.930869	I-126 SB (Diverge Analysis)	E
4579	9	10.3867	I-126 SB (Diverge Analysis)	E
4579	10	12.38193	I-126 SB (Diverge Analysis)	E
4586	1	75.028022	I-126 NB (Merge Analysis)	NW
4586	2	77.820577	I-126 NB (Merge Analysis)	NW
4586	3	77.02712	I-126 NB (Merge Analysis)	NW
4586	4	79.927139	I-126 NB (Merge Analysis)	NW
4586	5	70.471903	I-126 NB (Merge Analysis)	NW
4586	6	76.392649	I-126 NB (Merge Analysis)	NW
4586	7	75.398988	I-126 NB (Merge Analysis)	NW
4586	8	71.530335	I-126 NB (Merge Analysis)	NW
4586	9	75.064824	I-126 NB (Merge Analysis)	NW
4586	10	75.572695	I-126 NB (Merge Analysis)	NW

No Build PM

ID	Run	Density	Name (Type)	Direction
4587	1	106.023845	I-126 NB (Basic Analysis)	NW
4587	2	112.922269	I-126 NB (Basic Analysis)	NW
4587	3	115.344753	I-126 NB (Basic Analysis)	NW
4587	4	118.743374	I-126 NB (Basic Analysis)	NW
4587	5	107.662642	I-126 NB (Basic Analysis)	NW
4587	6	117.509314	I-126 NB (Basic Analysis)	NW
4587	7	116.156216	I-126 NB (Basic Analysis)	NW
4587	8	108.781628	I-126 NB (Basic Analysis)	NW
4587	9	114.03927	I-126 NB (Basic Analysis)	NW
4587	10	114.481706	I-126 NB (Basic Analysis)	NW
4588	1	75.658654	I-126 NB (Diverge Analysis)	NW
4588	2	77.728611	I-126 NB (Diverge Analysis)	NW
4588	3	77.885405	I-126 NB (Diverge Analysis)	NW
4588	4	81.805257	I-126 NB (Diverge Analysis)	NW
4588	5	71.30693	I-126 NB (Diverge Analysis)	NW
4588	6	75.686162	I-126 NB (Diverge Analysis)	NW
4588	7	76.505893	I-126 NB (Diverge Analysis)	NW
4588	8	72.280704	I-126 NB (Diverge Analysis)	NW
4588	9	76.241818	I-126 NB (Diverge Analysis)	NW
4588	10	75.840205	I-126 NB (Diverge Analysis)	NW
4589	1	75.658654	I-126 NB (Diverge Analysis)	NW
4589	2	77.728611	I-126 NB (Diverge Analysis)	NW
4589	3	77.885405	I-126 NB (Diverge Analysis)	NW
4589	4	81.805257	I-126 NB (Diverge Analysis)	NW
4589	5	71.30693	I-126 NB (Diverge Analysis)	NW
4589	6	75.686162	I-126 NB (Diverge Analysis)	NW
4589	7	76.505893	I-126 NB (Diverge Analysis)	NW
4589	8	72.280704	I-126 NB (Diverge Analysis)	NW
4589	9	76.241818	I-126 NB (Diverge Analysis)	NW
4589	10	75.840205	I-126 NB (Diverge Analysis)	NW
4593	1	11.433153	I-126 SB (Merge Analysis)	SE
4593	2	13.340841	I-126 SB (Merge Analysis)	SE
4593	3	12.416845	I-126 SB (Merge Analysis)	SE
4593	4	11.770567	I-126 SB (Merge Analysis)	SE
4593	5	11.627815	I-126 SB (Merge Analysis)	SE
4593	6	11.324142	I-126 SB (Merge Analysis)	SE
4593	7	12.100195	I-126 SB (Merge Analysis)	SE
4593	8	12.499901	I-126 SB (Merge Analysis)	SE
4593	9	11.440939	I-126 SB (Merge Analysis)	SE
4593	10	12.751664	I-126 SB (Merge Analysis)	SE
4594	1	17.314172	I-126 SB (Basic Analysis)	SE
4594	2	16.892182	I-126 SB (Basic Analysis)	SE
4594	3	16.808098	I-126 SB (Basic Analysis)	SE
4594	4	17.240304	I-126 SB (Basic Analysis)	SE
4594	5	17.081566	I-126 SB (Basic Analysis)	SE
4594	6	18.367969	I-126 SB (Basic Analysis)	SE
4594	7	17.217515	I-126 SB (Basic Analysis)	SE
4594	8	17.56328	I-126 SB (Basic Analysis)	SE
4594	9	17.496484	I-126 SB (Basic Analysis)	SE
4594	10	17.297669	I-126 SB (Basic Analysis)	SE
4599	1	103.609125	I-126 NB (Basic Analysis)	NW
4599	2	109.517718	I-126 NB (Basic Analysis)	NW
4599	3	107.142873	I-126 NB (Basic Analysis)	NW
4599	4	112.023737	I-126 NB (Basic Analysis)	NW
4599	5	106.322742	I-126 NB (Basic Analysis)	NW
4599	6	109.721895	I-126 NB (Basic Analysis)	NW
4599	7	111.396377	I-126 NB (Basic Analysis)	NW
4599	8	106.153926	I-126 NB (Basic Analysis)	NW
4599	9	108.639413	I-126 NB (Basic Analysis)	NW
4599	10	109.971698	I-126 NB (Basic Analysis)	NW
4601	1	104.884899	I-126 NB (Basic Analysis)	NW
4601	2	107.968799	I-126 NB (Basic Analysis)	NW
4601	3	106.947679	I-126 NB (Basic Analysis)	NW
4601	4	109.716147	I-126 NB (Basic Analysis)	NW

No Build PM

ID	Run	Density	Name (Type)	Direction
4601	5	110.200298	I-126 NB (Basic Analysis)	NW
4601	6	113.379563	I-126 NB (Basic Analysis)	NW
4601	7	112.742829	I-126 NB (Basic Analysis)	NW
4601	8	108.124315	I-126 NB (Basic Analysis)	NW
4601	9	110.452644	I-126 NB (Basic Analysis)	NW
4601	10	111.294776	I-126 NB (Basic Analysis)	NW
4602	1	9.807754	WB EXPRESSWAY TO I-26 WB (Basic Anal	NW
4602	2	10.502791	WB EXPRESSWAY TO I-26 WB (Basic Anal	NW
4602	3	11.789898	WB EXPRESSWAY TO I-26 WB (Basic Anal	NW
4602	4	14.22253	WB EXPRESSWAY TO I-26 WB (Basic Anal	NW
4602	5	12.510678	WB EXPRESSWAY TO I-26 WB (Basic Anal	NW
4602	6	9.936464	WB EXPRESSWAY TO I-26 WB (Basic Anal	NW
4602	7	12.562162	WB EXPRESSWAY TO I-26 WB (Basic Anal	NW
4602	8	11.944351	WB EXPRESSWAY TO I-26 WB (Basic Anal	NW
4602	9	11.738414	WB EXPRESSWAY TO I-26 WB (Basic Anal	NW
4602	10	49.965485	WB EXPRESSWAY TO I-26 WB (Basic Anal	NW
4603	1	111.805487	I-126 NB (Basic Analysis)	NW
4603	2	113.393699	I-126 NB (Basic Analysis)	NW
4603	3	110.544137	I-126 NB (Basic Analysis)	NW
4603	4	117.613564	I-126 NB (Basic Analysis)	NW
4603	5	116.691647	I-126 NB (Basic Analysis)	NW
4603	6	119.35892	I-126 NB (Basic Analysis)	NW
4603	7	119.021583	I-126 NB (Basic Analysis)	NW
4603	8	117.372609	I-126 NB (Basic Analysis)	NW
4603	9	115.606299	I-126 NB (Basic Analysis)	NW
4603	10	118.001188	I-126 NB (Basic Analysis)	NW
4609	1	20.474092	I-126 SB (Basic Analysis)	SE
4609	2	20.266425	I-126 SB (Basic Analysis)	SE
4609	3	19.704779	I-126 SB (Basic Analysis)	SE
4609	4	19.874689	I-126 SB (Basic Analysis)	SE
4609	5	18.874111	I-126 SB (Basic Analysis)	SE
4609	6	21.163169	I-126 SB (Basic Analysis)	SE
4609	7	19.723658	I-126 SB (Basic Analysis)	SE
4609	8	20.049318	I-126 SB (Basic Analysis)	SE
4609	9	20.360819	I-126 SB (Basic Analysis)	SE
4609	10	20.311262	I-126 SB (Basic Analysis)	SE
4611	1	110.061567	I-26 EB (Diverge Analysis)	SE
4611	2	116.450365	I-26 EB (Diverge Analysis)	SE
4611	3	98.507171	I-26 EB (Diverge Analysis)	SE
4611	4	101.047437	I-26 EB (Diverge Analysis)	SE
4611	5	92.238639	I-26 EB (Diverge Analysis)	SE
4611	6	105.925568	I-26 EB (Diverge Analysis)	SE
4611	7	96.600504	I-26 EB (Diverge Analysis)	SE
4611	8	103.992503	I-26 EB (Diverge Analysis)	SE
4611	9	95.911172	I-26 EB (Diverge Analysis)	SE
4611	10	115.957566	I-26 EB (Diverge Analysis)	SE
4619	1	149.84303	I-26 WB (Basic Analysis)	NW
4619	2	155.032208	I-26 WB (Basic Analysis)	NW
4619	3	152.770258	I-26 WB (Basic Analysis)	NW
4619	4	156.739758	I-26 WB (Basic Analysis)	NW
4619	5	156.93934	I-26 WB (Basic Analysis)	NW
4619	6	164.013475	I-26 WB (Basic Analysis)	NW
4619	7	162.904677	I-26 WB (Basic Analysis)	NW
4619	8	161.485414	I-26 WB (Basic Analysis)	NW
4619	9	156.22971	I-26 WB (Basic Analysis)	NW
4619	10	161.973286	I-26 WB (Basic Analysis)	NW
4624	1	109.115951	I-26 EB (Weaving Analysis)	SE
4624	2	95.270379	I-26 EB (Weaving Analysis)	SE
4624	3	100.43803	I-26 EB (Weaving Analysis)	SE
4624	4	110.875463	I-26 EB (Weaving Analysis)	SE
4624	5	108.266834	I-26 EB (Weaving Analysis)	SE
4624	6	98.179553	I-26 EB (Weaving Analysis)	SE
4624	7	106.571517	I-26 EB (Weaving Analysis)	SE
4624	8	101.380522	I-26 EB (Weaving Analysis)	SE

No Build PM

ID	Run	Density	Name (Type)	Direction
4624	9	106.13091	I-26 EB (Weaving Analysis)	SE
4624	10	102.378454	I-26 EB (Weaving Analysis)	SE
4639	1	99.45349	I-26 EB (Basic Analysis)	SE
4639	2	90.625273	I-26 EB (Basic Analysis)	SE
4639	3	88.920753	I-26 EB (Basic Analysis)	SE
4639	4	108.751321	I-26 EB (Basic Analysis)	SE
4639	5	90.96071	I-26 EB (Basic Analysis)	SE
4639	6	78.102273	I-26 EB (Basic Analysis)	SE
4639	7	88.95057	I-26 EB (Basic Analysis)	SE
4639	8	85.645889	I-26 EB (Basic Analysis)	SE
4639	9	95.30152	I-26 EB (Basic Analysis)	SE
4639	10	89.884826	I-26 EB (Basic Analysis)	SE
4641	1	83.096237	I-26 EB (Basic Analysis)	SE
4641	2	87.788992	I-26 EB (Basic Analysis)	SE
4641	3	71.152305	I-26 EB (Basic Analysis)	SE
4641	4	96.593852	I-26 EB (Basic Analysis)	SE
4641	5	71.449565	I-26 EB (Basic Analysis)	SE
4641	6	72.430526	I-26 EB (Basic Analysis)	SE
4641	7	65.763961	I-26 EB (Basic Analysis)	SE
4641	8	73.070627	I-26 EB (Basic Analysis)	SE
4641	9	77.577098	I-26 EB (Basic Analysis)	SE
4641	10	87.953476	I-26 EB (Basic Analysis)	SE
4643	1	108.664826	I-26 WB (Weaving Analysis)	NW
4643	2	113.106081	I-26 WB (Weaving Analysis)	NW
4643	3	106.152385	I-26 WB (Weaving Analysis)	NW
4643	4	116.639867	I-26 WB (Weaving Analysis)	NW
4643	5	112.775122	I-26 WB (Weaving Analysis)	NW
4643	6	116.668337	I-26 WB (Weaving Analysis)	NW
4643	7	111.17015	I-26 WB (Weaving Analysis)	NW
4643	8	114.390771	I-26 WB (Weaving Analysis)	NW
4643	9	112.604305	I-26 WB (Weaving Analysis)	NW
4643	10	104.988692	I-26 WB (Weaving Analysis)	NW
4646	1	134.876297	I-26 WB (Basic Analysis)	NW
4646	2	137.928173	I-26 WB (Basic Analysis)	NW
4646	3	132.334941	I-26 WB (Basic Analysis)	NW
4646	4	137.273718	I-26 WB (Basic Analysis)	NW
4646	5	135.850109	I-26 WB (Basic Analysis)	NW
4646	6	138.310502	I-26 WB (Basic Analysis)	NW
4646	7	136.387617	I-26 WB (Basic Analysis)	NW
4646	8	136.655247	I-26 WB (Basic Analysis)	NW
4646	9	138.076606	I-26 WB (Basic Analysis)	NW
4646	10	129.845311	I-26 WB (Basic Analysis)	NW
4649	1	81.73017	I-26 EB (Basic Analysis)	SE
4649	2	76.827073	I-26 EB (Basic Analysis)	SE
4649	3	65.538546	I-26 EB (Basic Analysis)	SE
4649	4	90.058784	I-26 EB (Basic Analysis)	SE
4649	5	66.970991	I-26 EB (Basic Analysis)	SE
4649	6	60.811238	I-26 EB (Basic Analysis)	SE
4649	7	59.946544	I-26 EB (Basic Analysis)	SE
4649	8	67.574376	I-26 EB (Basic Analysis)	SE
4649	9	67.066012	I-26 EB (Basic Analysis)	SE
4649	10	87.20102	I-26 EB (Basic Analysis)	SE
4650	1	80.216484	I-26 EB (Weaving Analysis)	SE
4650	2	78.53194	I-26 EB (Weaving Analysis)	SE
4650	3	62.632178	I-26 EB (Weaving Analysis)	SE
4650	4	95.683896	I-26 EB (Weaving Analysis)	SE
4650	5	64.442565	I-26 EB (Weaving Analysis)	SE
4650	6	60.766968	I-26 EB (Weaving Analysis)	SE
4650	7	57.59474	I-26 EB (Weaving Analysis)	SE
4650	8	68.389783	I-26 EB (Weaving Analysis)	SE
4650	9	68.110687	I-26 EB (Weaving Analysis)	SE
4650	10	86.923515	I-26 EB (Weaving Analysis)	SE
4651	1	112.882288	I-26 WB (Weaving Analysis)	NW
4651	2	116.260733	I-26 WB (Weaving Analysis)	NW

No Build PM

ID	Run	Density	Name (Type)	Direction
4651	3	113.272557	I-26 WB (Weaving Analysis)	NW
4651	4	112.282323	I-26 WB (Weaving Analysis)	NW
4651	5	112.838601	I-26 WB (Weaving Analysis)	NW
4651	6	114.816157	I-26 WB (Weaving Analysis)	NW
4651	7	112.751228	I-26 WB (Weaving Analysis)	NW
4651	8	113.399248	I-26 WB (Weaving Analysis)	NW
4651	9	116.518486	I-26 WB (Weaving Analysis)	NW
4651	10	107.715598	I-26 WB (Weaving Analysis)	NW
4654	1	92.468571	I-26 WB (Basic Analysis)	NW
4654	2	95.568286	I-26 WB (Basic Analysis)	NW
4654	3	92.540046	I-26 WB (Basic Analysis)	NW
4654	4	89.767606	I-26 WB (Basic Analysis)	NW
4654	5	93.108075	I-26 WB (Basic Analysis)	NW
4654	6	91.987061	I-26 WB (Basic Analysis)	NW
4654	7	92.145057	I-26 WB (Basic Analysis)	NW
4654	8	94.449154	I-26 WB (Basic Analysis)	NW
4654	9	94.723765	I-26 WB (Basic Analysis)	NW
4654	10	87.911162	I-26 WB (Basic Analysis)	NW
4659	1	72.046962	I-26 WB (Basic Analysis)	NW
4659	2	72.139103	I-26 WB (Basic Analysis)	NW
4659	3	71.362493	I-26 WB (Basic Analysis)	NW
4659	4	71.296679	I-26 WB (Basic Analysis)	NW
4659	5	69.453877	I-26 WB (Basic Analysis)	NW
4659	6	68.190242	I-26 WB (Basic Analysis)	NW
4659	7	71.974567	I-26 WB (Basic Analysis)	NW
4659	8	72.35629	I-26 WB (Basic Analysis)	NW
4659	9	74.738769	I-26 WB (Basic Analysis)	NW
4659	10	71.132143	I-26 WB (Basic Analysis)	NW
4665	1	81.044113	I-26 EB (Basic Analysis)	SE
4665	2	74.902573	I-26 EB (Basic Analysis)	SE
4665	3	67.577122	I-26 EB (Basic Analysis)	SE
4665	4	88.0265	I-26 EB (Basic Analysis)	SE
4665	5	68.276705	I-26 EB (Basic Analysis)	SE
4665	6	63.507426	I-26 EB (Basic Analysis)	SE
4665	7	60.594735	I-26 EB (Basic Analysis)	SE
4665	8	67.361864	I-26 EB (Basic Analysis)	SE
4665	9	69.527885	I-26 EB (Basic Analysis)	SE
4665	10	84.010618	I-26 EB (Basic Analysis)	SE
4667	1	65.756068	I-26 EB (Merge Analysis)	SE
4667	2	60.466993	I-26 EB (Merge Analysis)	SE
4667	3	53.95619	I-26 EB (Merge Analysis)	SE
4667	4	64.797364	I-26 EB (Merge Analysis)	SE
4667	5	54.266863	I-26 EB (Merge Analysis)	SE
4667	6	58.825951	I-26 EB (Merge Analysis)	SE
4667	7	50.963812	I-26 EB (Merge Analysis)	SE
4667	8	51.951107	I-26 EB (Merge Analysis)	SE
4667	9	54.876775	I-26 EB (Merge Analysis)	SE
4667	10	65.277669	I-26 EB (Merge Analysis)	SE
4668	1	65.756068	I-26 EB (Merge Analysis)	SE
4668	2	60.466993	I-26 EB (Merge Analysis)	SE
4668	3	53.95619	I-26 EB (Merge Analysis)	SE
4668	4	64.797364	I-26 EB (Merge Analysis)	SE
4668	5	54.266863	I-26 EB (Merge Analysis)	SE
4668	6	58.825951	I-26 EB (Merge Analysis)	SE
4668	7	50.963812	I-26 EB (Merge Analysis)	SE
4668	8	51.951107	I-26 EB (Merge Analysis)	SE
4668	9	54.876775	I-26 EB (Merge Analysis)	SE
4668	10	65.277669	I-26 EB (Merge Analysis)	SE
4669	1	59.940944	I-26 EB (Basic Analysis)	SE
4669	2	52.739474	I-26 EB (Basic Analysis)	SE
4669	3	44.346886	I-26 EB (Basic Analysis)	SE
4669	4	58.434933	I-26 EB (Basic Analysis)	SE
4669	5	44.654934	I-26 EB (Basic Analysis)	SE
4669	6	43.393649	I-26 EB (Basic Analysis)	SE

No Build PM

ID	Run	Density	Name (Type)	Direction
4669	7	43.823205	I-26 EB (Basic Analysis)	SE
4669	8	44.006322	I-26 EB (Basic Analysis)	SE
4669	9	42.974362	I-26 EB (Basic Analysis)	SE
4669	10	55.830219	I-26 EB (Basic Analysis)	SE
4670	1	59.784718	I-26 EB (Diverge Analysis)	SE
4670	2	56.660398	I-26 EB (Diverge Analysis)	SE
4670	3	43.801832	I-26 EB (Diverge Analysis)	SE
4670	4	61.550243	I-26 EB (Diverge Analysis)	SE
4670	5	47.830501	I-26 EB (Diverge Analysis)	SE
4670	6	41.718195	I-26 EB (Diverge Analysis)	SE
4670	7	43.808649	I-26 EB (Diverge Analysis)	SE
4670	8	45.015205	I-26 EB (Diverge Analysis)	SE
4670	9	46.594406	I-26 EB (Diverge Analysis)	SE
4670	10	58.816747	I-26 EB (Diverge Analysis)	SE
4675	1	39.382924	I-26 WB (Merge Analysis)	NW
4675	2	38.180258	I-26 WB (Merge Analysis)	NW
4675	3	36.08977	I-26 WB (Merge Analysis)	NW
4675	4	38.358213	I-26 WB (Merge Analysis)	NW
4675	5	36.185592	I-26 WB (Merge Analysis)	NW
4675	6	36.834836	I-26 WB (Merge Analysis)	NW
4675	7	37.315903	I-26 WB (Merge Analysis)	NW
4675	8	38.383635	I-26 WB (Merge Analysis)	NW
4675	9	38.512702	I-26 WB (Merge Analysis)	NW
4675	10	39.22648	I-26 WB (Merge Analysis)	NW
4676	1	49.787343	I-26 WB (Basic Analysis)	NW
4676	2	49.775725	I-26 WB (Basic Analysis)	NW
4676	3	49.552474	I-26 WB (Basic Analysis)	NW
4676	4	50.663747	I-26 WB (Basic Analysis)	NW
4676	5	49.471971	I-26 WB (Basic Analysis)	NW
4676	6	49.960799	I-26 WB (Basic Analysis)	NW
4676	7	50.114335	I-26 WB (Basic Analysis)	NW
4676	8	50.752549	I-26 WB (Basic Analysis)	NW
4676	9	51.855523	I-26 WB (Basic Analysis)	NW
4676	10	54.804255	I-26 WB (Basic Analysis)	NW
4677	1	49.787343	I-26 WB (Basic Analysis)	NW
4677	2	49.775725	I-26 WB (Basic Analysis)	NW
4677	3	49.552474	I-26 WB (Basic Analysis)	NW
4677	4	50.663747	I-26 WB (Basic Analysis)	NW
4677	5	49.471971	I-26 WB (Basic Analysis)	NW
4677	6	49.960799	I-26 WB (Basic Analysis)	NW
4677	7	50.114335	I-26 WB (Basic Analysis)	NW
4677	8	50.752549	I-26 WB (Basic Analysis)	NW
4677	9	51.855523	I-26 WB (Basic Analysis)	NW
4677	10	54.804255	I-26 WB (Basic Analysis)	NW
4687	1	68.020123	I-26 EB (Basic Analysis)	SE
4687	2	75.921409	I-26 EB (Basic Analysis)	SE
4687	3	48.392483	I-26 EB (Basic Analysis)	SE
4687	4	68.234922	I-26 EB (Basic Analysis)	SE
4687	5	67.422818	I-26 EB (Basic Analysis)	SE
4687	6	72.972884	I-26 EB (Basic Analysis)	SE
4687	7	58.975447	I-26 EB (Basic Analysis)	SE
4687	8	55.218123	I-26 EB (Basic Analysis)	SE
4687	9	67.120447	I-26 EB (Basic Analysis)	SE
4687	10	79.50772	I-26 EB (Basic Analysis)	SE
4689	1	62.14057	I-26 WB (Basic Analysis)	NW
4689	2	40.32267	I-26 WB (Basic Analysis)	NW
4689	3	60.638212	I-26 WB (Basic Analysis)	NW
4689	4	65.127742	I-26 WB (Basic Analysis)	NW
4689	5	41.379954	I-26 WB (Basic Analysis)	NW
4689	6	41.456595	I-26 WB (Basic Analysis)	NW
4689	7	44.75218	I-26 WB (Basic Analysis)	NW
4689	8	65.120355	I-26 WB (Basic Analysis)	NW
4689	9	67.370661	I-26 WB (Basic Analysis)	NW
4689	10	76.958237	I-26 WB (Basic Analysis)	NW

No Build PM

ID	Run	Density	Name (Type)	Direction
4700	1	46.692004	I-26 WB (Merge Analysis)	NW
4700	2	38.711733	I-26 WB (Merge Analysis)	NW
4700	3	45.070314	I-26 WB (Merge Analysis)	NW
4700	4	46.605591	I-26 WB (Merge Analysis)	NW
4700	5	39.773177	I-26 WB (Merge Analysis)	NW
4700	6	40.457282	I-26 WB (Merge Analysis)	NW
4700	7	40.1822	I-26 WB (Merge Analysis)	NW
4700	8	45.849474	I-26 WB (Merge Analysis)	NW
4700	9	46.231133	I-26 WB (Merge Analysis)	NW
4700	10	47.152875	I-26 WB (Merge Analysis)	NW
4701	1	45.819624	I-26 WB (Basic Analysis)	NW
4701	2	44.284431	I-26 WB (Basic Analysis)	NW
4701	3	44.930463	I-26 WB (Basic Analysis)	NW
4701	4	48.382911	I-26 WB (Basic Analysis)	NW
4701	5	45.173593	I-26 WB (Basic Analysis)	NW
4701	6	46.632374	I-26 WB (Basic Analysis)	NW
4701	7	45.131913	I-26 WB (Basic Analysis)	NW
4701	8	47.299245	I-26 WB (Basic Analysis)	NW
4701	9	46.236419	I-26 WB (Basic Analysis)	NW
4701	10	44.61092	I-26 WB (Basic Analysis)	NW
4702	1	38.189163	I-26 WB (Diverge Analysis)	NW
4702	2	32.987761	I-26 WB (Diverge Analysis)	NW
4702	3	37.442475	I-26 WB (Diverge Analysis)	NW
4702	4	38.031882	I-26 WB (Diverge Analysis)	NW
4702	5	33.621652	I-26 WB (Diverge Analysis)	NW
4702	6	34.352454	I-26 WB (Diverge Analysis)	NW
4702	7	34.94345	I-26 WB (Diverge Analysis)	NW
4702	8	37.121557	I-26 WB (Diverge Analysis)	NW
4702	9	38.15739	I-26 WB (Diverge Analysis)	NW
4702	10	38.475129	I-26 WB (Diverge Analysis)	NW
4703	1	38.189163	I-26 WB (Diverge Analysis)	NW
4703	2	32.987761	I-26 WB (Diverge Analysis)	NW
4703	3	37.442475	I-26 WB (Diverge Analysis)	NW
4703	4	38.031882	I-26 WB (Diverge Analysis)	NW
4703	5	33.621652	I-26 WB (Diverge Analysis)	NW
4703	6	34.352454	I-26 WB (Diverge Analysis)	NW
4703	7	34.94345	I-26 WB (Diverge Analysis)	NW
4703	8	37.121557	I-26 WB (Diverge Analysis)	NW
4703	9	38.15739	I-26 WB (Diverge Analysis)	NW
4703	10	38.475129	I-26 WB (Diverge Analysis)	NW
4705	1	36.691651	I-26 EB (Merge Analysis)	SE
4705	2	43.502595	I-26 EB (Merge Analysis)	SE
4705	3	34.778186	I-26 EB (Merge Analysis)	SE
4705	4	37.516537	I-26 EB (Merge Analysis)	SE
4705	5	55.071284	I-26 EB (Merge Analysis)	SE
4705	6	39.932596	I-26 EB (Merge Analysis)	SE
4705	7	37.802768	I-26 EB (Merge Analysis)	SE
4705	8	34.992296	I-26 EB (Merge Analysis)	SE
4705	9	48.828294	I-26 EB (Merge Analysis)	SE
4705	10	67.248494	I-26 EB (Merge Analysis)	SE
4706	1	36.691651	I-26 EB (Merge Analysis)	SE
4706	2	43.502595	I-26 EB (Merge Analysis)	SE
4706	3	34.778186	I-26 EB (Merge Analysis)	SE
4706	4	37.516537	I-26 EB (Merge Analysis)	SE
4706	5	55.071284	I-26 EB (Merge Analysis)	SE
4706	6	39.932596	I-26 EB (Merge Analysis)	SE
4706	7	37.802768	I-26 EB (Merge Analysis)	SE
4706	8	34.992296	I-26 EB (Merge Analysis)	SE
4706	9	48.828294	I-26 EB (Merge Analysis)	SE
4706	10	67.248494	I-26 EB (Merge Analysis)	SE
4707	1	38.629055	I-26 EB (Diverge Analysis)	SE
4707	2	47.094653	I-26 EB (Diverge Analysis)	SE
4707	3	35.255723	I-26 EB (Diverge Analysis)	SE
4707	4	38.083455	I-26 EB (Diverge Analysis)	SE

No Build PM

ID	Run	Density	Name (Type)	Direction
4707	5	52.747184	I-26 EB (Diverge Analysis)	SE
4707	6	45.73652	I-26 EB (Diverge Analysis)	SE
4707	7	37.141855	I-26 EB (Diverge Analysis)	SE
4707	8	35.909856	I-26 EB (Diverge Analysis)	SE
4707	9	51.556251	I-26 EB (Diverge Analysis)	SE
4707	10	64.116781	I-26 EB (Diverge Analysis)	SE
4712	1	35.19115	I-26 WB (Basic Analysis)	NW
4712	2	35.634659	I-26 WB (Basic Analysis)	NW
4712	3	34.058897	I-26 WB (Basic Analysis)	NW
4712	4	34.760685	I-26 WB (Basic Analysis)	NW
4712	5	34.484144	I-26 WB (Basic Analysis)	NW
4712	6	35.418122	I-26 WB (Basic Analysis)	NW
4712	7	35.089403	I-26 WB (Basic Analysis)	NW
4712	8	34.56241	I-26 WB (Basic Analysis)	NW
4712	9	35.407686	I-26 WB (Basic Analysis)	NW
4712	10	33.764094	I-26 WB (Basic Analysis)	NW
4714	1	31.092947	I-26 EB (Basic Analysis)	SE
4714	2	31.18542	I-26 EB (Basic Analysis)	SE
4714	3	29.793179	I-26 EB (Basic Analysis)	SE
4714	4	29.966567	I-26 EB (Basic Analysis)	SE
4714	5	37.564811	I-26 EB (Basic Analysis)	SE
4714	6	30.318481	I-26 EB (Basic Analysis)	SE
4714	7	30.771858	I-26 EB (Basic Analysis)	SE
4714	8	30.357011	I-26 EB (Basic Analysis)	SE
4714	9	30.443063	I-26 EB (Basic Analysis)	SE
4714	10	50.76541	I-26 EB (Basic Analysis)	SE
4718	1	32.780343	I-26 EB (Merge Analysis)	SE
4718	2	30.311805	I-26 EB (Merge Analysis)	SE
4718	3	30.797942	I-26 EB (Merge Analysis)	SE
4718	4	31.170514	I-26 EB (Merge Analysis)	SE
4718	5	31.654658	I-26 EB (Merge Analysis)	SE
4718	6	30.849743	I-26 EB (Merge Analysis)	SE
4718	7	30.770049	I-26 EB (Merge Analysis)	SE
4718	8	29.490952	I-26 EB (Merge Analysis)	SE
4718	9	31.901711	I-26 EB (Merge Analysis)	SE
4718	10	32.357962	I-26 EB (Merge Analysis)	SE
4719	1	32.780343	I-26 EB (Merge Analysis)	SE
4719	2	30.311805	I-26 EB (Merge Analysis)	SE
4719	3	30.797942	I-26 EB (Merge Analysis)	SE
4719	4	31.170514	I-26 EB (Merge Analysis)	SE
4719	5	31.654658	I-26 EB (Merge Analysis)	SE
4719	6	30.849743	I-26 EB (Merge Analysis)	SE
4719	7	30.770049	I-26 EB (Merge Analysis)	SE
4719	8	29.490952	I-26 EB (Merge Analysis)	SE
4719	9	31.901711	I-26 EB (Merge Analysis)	SE
4719	10	32.357962	I-26 EB (Merge Analysis)	SE
4720	1	31.902924	I-26 EB (Diverge Analysis)	SE
4720	2	30.544791	I-26 EB (Diverge Analysis)	SE
4720	3	30.084258	I-26 EB (Diverge Analysis)	SE
4720	4	30.902657	I-26 EB (Diverge Analysis)	SE
4720	5	31.627191	I-26 EB (Diverge Analysis)	SE
4720	6	31.503991	I-26 EB (Diverge Analysis)	SE
4720	7	30.266124	I-26 EB (Diverge Analysis)	SE
4720	8	31.87359	I-26 EB (Diverge Analysis)	SE
4720	9	31.081591	I-26 EB (Diverge Analysis)	SE
4720	10	33.90639	I-26 EB (Diverge Analysis)	SE
4725	1	37.491427	I-26 WB (Merge Analysis)	NW
4725	2	35.884351	I-26 WB (Merge Analysis)	NW
4725	3	36.625899	I-26 WB (Merge Analysis)	NW
4725	4	37.213055	I-26 WB (Merge Analysis)	NW
4725	5	35.243392	I-26 WB (Merge Analysis)	NW
4725	6	37.301947	I-26 WB (Merge Analysis)	NW
4725	7	36.532328	I-26 WB (Merge Analysis)	NW
4725	8	37.659854	I-26 WB (Merge Analysis)	NW

ID	Run	Density	Name (Type)	Direction
4725	9	35.315909	I-26 WB (Merge Analysis)	NW
4725	10	35.818852	I-26 WB (Merge Analysis)	NW
4726	1		I-26 WB (Basic Analysis)	NW
4726	2		I-26 WB (Basic Analysis)	NW
4726	3		I-26 WB (Basic Analysis)	NW
4726	4		I-26 WB (Basic Analysis)	NW
4726	5		I-26 WB (Basic Analysis)	NW
4726	6		I-26 WB (Basic Analysis)	NW
4726	7		I-26 WB (Basic Analysis)	NW
4726	8		I-26 WB (Basic Analysis)	NW
4726	9		I-26 WB (Basic Analysis)	NW
4726	10		I-26 WB (Basic Analysis)	NW
4727	1	38.758626	I-26 WB (Diverge Analysis)	NW
4727	2	35.819925	I-26 WB (Diverge Analysis)	NW
4727	3	36.017121	I-26 WB (Diverge Analysis)	NW
4727	4	38.6961	I-26 WB (Diverge Analysis)	NW
4727	5	36.849192	I-26 WB (Diverge Analysis)	NW
4727	6	38.833176	I-26 WB (Diverge Analysis)	NW
4727	7	38.395497	I-26 WB (Diverge Analysis)	NW
4727	8	38.308923	I-26 WB (Diverge Analysis)	NW
4727	9	37.572741	I-26 WB (Diverge Analysis)	NW
4727	10	36.077242	I-26 WB (Diverge Analysis)	NW
4728	1	38.903986	I-26 WB (Basic Analysis)	NW
4728	2	37.28903	I-26 WB (Basic Analysis)	NW
4728	3	38.314092	I-26 WB (Basic Analysis)	NW
4728	4	41.108835	I-26 WB (Basic Analysis)	NW
4728	5	39.880695	I-26 WB (Basic Analysis)	NW
4728	6	37.666175	I-26 WB (Basic Analysis)	NW
4728	7	41.466639	I-26 WB (Basic Analysis)	NW
4728	8	38.5075	I-26 WB (Basic Analysis)	NW
4728	9	39.609924	I-26 WB (Basic Analysis)	NW
4728	10	38.565522	I-26 WB (Basic Analysis)	NW
4729	1	28.917703	I-26 WB (Diverge Analysis)	NW
4729	2	28.664058	I-26 WB (Diverge Analysis)	NW
4729	3	26.915012	I-26 WB (Diverge Analysis)	NW
4729	4	27.828133	I-26 WB (Diverge Analysis)	NW
4729	5	27.907535	I-26 WB (Diverge Analysis)	NW
4729	6	28.525105	I-26 WB (Diverge Analysis)	NW
4729	7	29.032394	I-26 WB (Diverge Analysis)	NW
4729	8	27.519348	I-26 WB (Diverge Analysis)	NW
4729	9	27.435535	I-26 WB (Diverge Analysis)	NW
4729	10	27.757554	I-26 WB (Diverge Analysis)	NW
4730	1	28.917703	I-26 WB (Diverge Analysis)	NW
4730	2	28.664058	I-26 WB (Diverge Analysis)	NW
4730	3	26.915012	I-26 WB (Diverge Analysis)	NW
4730	4	27.828133	I-26 WB (Diverge Analysis)	NW
4730	5	27.907535	I-26 WB (Diverge Analysis)	NW
4730	6	28.525105	I-26 WB (Diverge Analysis)	NW
4730	7	29.032394	I-26 WB (Diverge Analysis)	NW
4730	8	27.519348	I-26 WB (Diverge Analysis)	NW
4730	9	27.435535	I-26 WB (Diverge Analysis)	NW
4730	10	27.757554	I-26 WB (Diverge Analysis)	NW
4732	1	31.294005	I-26 WB (Basic Analysis)	NW
4732	2	31.609405	I-26 WB (Basic Analysis)	NW
4732	3	31.3866	I-26 WB (Basic Analysis)	NW
4732	4	31.623873	I-26 WB (Basic Analysis)	NW
4732	5	30.784736	I-26 WB (Basic Analysis)	NW
4732	6	30.405678	I-26 WB (Basic Analysis)	NW
4732	7	31.788807	I-26 WB (Basic Analysis)	NW

No Build PM

ID	Run	Density	Name (Type)	Direction
4732	8	31.597831	I-26 WB (Basic Analysis)	NW
4732	9	30.680568	I-26 WB (Basic Analysis)	NW
4732	10	31.502343	I-26 WB (Basic Analysis)	NW
4733	1	27.587079	I-26 EB (Basic Analysis)	SE
4733	2	28.836786	I-26 EB (Basic Analysis)	SE
4733	3	27.714388	I-26 EB (Basic Analysis)	SE
4733	4	26.905067	I-26 EB (Basic Analysis)	SE
4733	5	26.997301	I-26 EB (Basic Analysis)	SE
4733	6	27.522126	I-26 EB (Basic Analysis)	SE
4733	7	25.832034	I-26 EB (Basic Analysis)	SE
4733	8	27.953417	I-26 EB (Basic Analysis)	SE
4733	9	27.331162	I-26 EB (Basic Analysis)	SE
4733	10	28.506822	I-26 EB (Basic Analysis)	SE
4736	1	31.053841	I-26 EB (Basic Analysis)	SE
4736	2	25.571682	I-26 EB (Basic Analysis)	SE
4736	3	29.330303	I-26 EB (Basic Analysis)	SE
4736	4	28.888112	I-26 EB (Basic Analysis)	SE
4736	5	29.506174	I-26 EB (Basic Analysis)	SE
4736	6	29.767468	I-26 EB (Basic Analysis)	SE
4736	7	30.244833	I-26 EB (Basic Analysis)	SE
4736	8	27.154524	I-26 EB (Basic Analysis)	SE
4736	9	27.928357	I-26 EB (Basic Analysis)	SE
4736	10	28.099204	I-26 EB (Basic Analysis)	SE
4737	1	24.493891	I-26 EB (Diverge Analysis)	SE
4737	2	23.280808	I-26 EB (Diverge Analysis)	SE
4737	3	21.988665	I-26 EB (Diverge Analysis)	SE
4737	4	21.534068	I-26 EB (Diverge Analysis)	SE
4737	5	23.107864	I-26 EB (Diverge Analysis)	SE
4737	6	23.720582	I-26 EB (Diverge Analysis)	SE
4737	7	22.93739	I-26 EB (Diverge Analysis)	SE
4737	8	22.505028	I-26 EB (Diverge Analysis)	SE
4737	9	22.361731	I-26 EB (Diverge Analysis)	SE
4737	10	24.963312	I-26 EB (Diverge Analysis)	SE
4739	1	24.357521	I-26 WB (Weaving Analysis)	NW
4739	2	25.308338	I-26 WB (Weaving Analysis)	NW
4739	3	26.346367	I-26 WB (Weaving Analysis)	NW
4739	4	26.642036	I-26 WB (Weaving Analysis)	NW
4739	5	25.982632	I-26 WB (Weaving Analysis)	NW
4739	6	25.119026	I-26 WB (Weaving Analysis)	NW
4739	7	25.291322	I-26 WB (Weaving Analysis)	NW
4739	8	24.638299	I-26 WB (Weaving Analysis)	NW
4739	9	25.467872	I-26 WB (Weaving Analysis)	NW
4739	10	24.916951	I-26 WB (Weaving Analysis)	NW
4741	1	32.067247	I-26 WB (Basic Analysis)	NW
4741	2	32.802845	I-26 WB (Basic Analysis)	NW
4741	3	31.10531	I-26 WB (Basic Analysis)	NW
4741	4	31.929827	I-26 WB (Basic Analysis)	NW
4741	5	31.687322	I-26 WB (Basic Analysis)	NW
4741	6	34.257875	I-26 WB (Basic Analysis)	NW
4741	7	31.832825	I-26 WB (Basic Analysis)	NW
4741	8	30.183791	I-26 WB (Basic Analysis)	NW
4741	9	34.338711	I-26 WB (Basic Analysis)	NW
4741	10	31.590321	I-26 WB (Basic Analysis)	NW
4742	1	21.28573	I-26 WB (Diverge Analysis)	NW
4742	2	20.693115	I-26 WB (Diverge Analysis)	NW
4742	3	21.1566	I-26 WB (Diverge Analysis)	NW
4742	4	22.143524	I-26 WB (Diverge Analysis)	NW

No Build PM

ID	Run	Density	Name (Type)	Direction
4742	5	20.889116	I-26 WB (Diverge Analysis)	NW
4742	6	21.873734	I-26 WB (Diverge Analysis)	NW
4742	7	22.761504	I-26 WB (Diverge Analysis)	NW
4742	8	21.244224	I-26 WB (Diverge Analysis)	NW
4742	9	21.716933	I-26 WB (Diverge Analysis)	NW
4742	10	20.861445	I-26 WB (Diverge Analysis)	NW
4745	1	25.862642	I-26 EB (Basic Analysis)	SE
4745	2	26.867837	I-26 EB (Basic Analysis)	SE
4745	3	22.292789	I-26 EB (Basic Analysis)	SE
4745	4	23.69881	I-26 EB (Basic Analysis)	SE
4745	5	24.240551	I-26 EB (Basic Analysis)	SE
4745	6	22.543305	I-26 EB (Basic Analysis)	SE
4745	7	23.63305	I-26 EB (Basic Analysis)	SE
4745	8	24.074584	I-26 EB (Basic Analysis)	SE
4745	9	22.577751	I-26 EB (Basic Analysis)	SE
4745	10	23.432637	I-26 EB (Basic Analysis)	SE
4748	1	24.072796	I-26 EB (Weaving Analysis)	SE
4748	2	24.763762	I-26 EB (Weaving Analysis)	SE
4748	3	26.206861	I-26 EB (Weaving Analysis)	SE
4748	4	23.409015	I-26 EB (Weaving Analysis)	SE
4748	5	24.503234	I-26 EB (Weaving Analysis)	SE
4748	6	22.964985	I-26 EB (Weaving Analysis)	SE
4748	7	23.655951	I-26 EB (Weaving Analysis)	SE
4748	8	22.831323	I-26 EB (Weaving Analysis)	SE
4748	9	24.906486	I-26 EB (Weaving Analysis)	SE
4748	10	22.756562	I-26 EB (Weaving Analysis)	SE
4753	1	26.92634	I-26 WB (Basic Analysis)	NW
4753	2	26.834055	I-26 WB (Basic Analysis)	NW
4753	3	24.360797	I-26 WB (Basic Analysis)	NW
4753	4	26.26452	I-26 WB (Basic Analysis)	NW
4753	5	26.164324	I-26 WB (Basic Analysis)	NW
4753	6	26.546651	I-26 WB (Basic Analysis)	NW
4753	7	27.574977	I-26 WB (Basic Analysis)	NW
4753	8	25.223009	I-26 WB (Basic Analysis)	NW
4753	9	26.702218	I-26 WB (Basic Analysis)	NW
4753	10	26.172234	I-26 WB (Basic Analysis)	NW
4755	1	26.111241	I-26 EB (Basic Analysis)	SE
4755	2	22.824862	I-26 EB (Basic Analysis)	SE
4755	3	23.113362	I-26 EB (Basic Analysis)	SE
4755	4	24.744007	I-26 EB (Basic Analysis)	SE
4755	5	22.406748	I-26 EB (Basic Analysis)	SE
4755	6	29.02968	I-26 EB (Basic Analysis)	SE
4755	7	26.098698	I-26 EB (Basic Analysis)	SE
4755	8	23.636004	I-26 EB (Basic Analysis)	SE
4755	9	25.162122	I-26 EB (Basic Analysis)	SE
4755	10	26.320299	I-26 EB (Basic Analysis)	SE
4756	1	22.344567	I-26 EB (Diverge Analysis)	SE
4756	2	21.368969	I-26 EB (Diverge Analysis)	SE
4756	3	18.362486	I-26 EB (Diverge Analysis)	SE
4756	4	18.93722	I-26 EB (Diverge Analysis)	SE
4756	5	20.878755	I-26 EB (Diverge Analysis)	SE
4756	6	20.922223	I-26 EB (Diverge Analysis)	SE
4756	7	18.572578	I-26 EB (Diverge Analysis)	SE
4756	8	19.147311	I-26 EB (Diverge Analysis)	SE
4756	9	18.601556	I-26 EB (Diverge Analysis)	SE
4756	10	21.789152	I-26 EB (Diverge Analysis)	SE
4760	1	19.81621	I-26 WB (Basic Analysis)	NW

No Build PM

ID	Run	Density	Name (Type)	Direction
4760	2	20.584483	I-26 WB (Basic Analysis)	NW
4760	3	21.433	I-26 WB (Basic Analysis)	NW
4760	4	21.114409	I-26 WB (Basic Analysis)	NW
4760	5	20.565416	I-26 WB (Basic Analysis)	NW
4760	6	20.248413	I-26 WB (Basic Analysis)	NW
4760	7	20.431146	I-26 WB (Basic Analysis)	NW
4760	8	19.967958	I-26 WB (Basic Analysis)	NW
4760	9	20.718752	I-26 WB (Basic Analysis)	NW
4760	10	20.655193	I-26 WB (Basic Analysis)	NW
4761	1	19.81621	I-26 WB (Basic Analysis)	NW
4761	2	20.584483	I-26 WB (Basic Analysis)	NW
4761	3	21.433	I-26 WB (Basic Analysis)	NW
4761	4	21.114409	I-26 WB (Basic Analysis)	NW
4761	5	20.565416	I-26 WB (Basic Analysis)	NW
4761	6	20.248413	I-26 WB (Basic Analysis)	NW
4761	7	20.431146	I-26 WB (Basic Analysis)	NW
4761	8	19.967958	I-26 WB (Basic Analysis)	NW
4761	9	20.718752	I-26 WB (Basic Analysis)	NW
4761	10	20.655193	I-26 WB (Basic Analysis)	NW
4764	1	18.739374	I-26 WB (Basic Analysis)	NW
4764	2	19.061035	I-26 WB (Basic Analysis)	NW
4764	3	19.290825	I-26 WB (Basic Analysis)	NW
4764	4	19.501113	I-26 WB (Basic Analysis)	NW
4764	5	18.935686	I-26 WB (Basic Analysis)	NW
4764	6	18.989531	I-26 WB (Basic Analysis)	NW
4764	7	19.471428	I-26 WB (Basic Analysis)	NW
4764	8	18.531252	I-26 WB (Basic Analysis)	NW
4764	9	19.391689	I-26 WB (Basic Analysis)	NW
4764	10	18.759958	I-26 WB (Basic Analysis)	NW
4768	1	17.71016	I-26 EB (Basic Analysis)	SE
4768	2	17.076546	I-26 EB (Basic Analysis)	SE
4768	3	16.328232	I-26 EB (Basic Analysis)	SE
4768	4	16.386722	I-26 EB (Basic Analysis)	SE
4768	5	16.734184	I-26 EB (Basic Analysis)	SE
4768	6	17.05289	I-26 EB (Basic Analysis)	SE
4768	7	16.669509	I-26 EB (Basic Analysis)	SE
4768	8	16.768908	I-26 EB (Basic Analysis)	SE
4768	9	16.551446	I-26 EB (Basic Analysis)	SE
4768	10	16.991254	I-26 EB (Basic Analysis)	SE
4769	1	15.635609	I-26 EB (Diverge Analysis)	SE
4769	2	15.802305	I-26 EB (Diverge Analysis)	SE
4769	3	16.448254	I-26 EB (Diverge Analysis)	SE
4769	4	14.9558	I-26 EB (Diverge Analysis)	SE
4769	5	16.312813	I-26 EB (Diverge Analysis)	SE
4769	6	16.904065	I-26 EB (Diverge Analysis)	SE
4769	7	15.273565	I-26 EB (Diverge Analysis)	SE
4769	8	15.481935	I-26 EB (Diverge Analysis)	SE
4769	9	14.893289	I-26 EB (Diverge Analysis)	SE
4769	10	15.170744	I-26 EB (Diverge Analysis)	SE
6149	1	18.556614	I-26 EB (Merge Analysis)	S
6149	2	17.928753	I-26 EB (Merge Analysis)	S
6149	3	18.815145	I-26 EB (Merge Analysis)	S
6149	4	17.925799	I-26 EB (Merge Analysis)	S
6149	5	18.776735	I-26 EB (Merge Analysis)	S
6149	6	19.67199	I-26 EB (Merge Analysis)	S
6149	7	19.813813	I-26 EB (Merge Analysis)	S
6149	8	18.215353	I-26 EB (Merge Analysis)	S

No Build PM

ID	Run	Density	Name (Type)	Direction
6149	9	18.175466	I-26 EB (Merge Analysis)	S
6149	10	18.556614	I-26 EB (Merge Analysis)	S
6150	1	18.556614	I-26 EB (Merge Analysis)	S
6150	2	17.928753	I-26 EB (Merge Analysis)	S
6150	3	18.815145	I-26 EB (Merge Analysis)	S
6150	4	17.925799	I-26 EB (Merge Analysis)	S
6150	5	18.776735	I-26 EB (Merge Analysis)	S
6150	6	19.67199	I-26 EB (Merge Analysis)	S
6150	7	19.813813	I-26 EB (Merge Analysis)	S
6150	8	18.215353	I-26 EB (Merge Analysis)	S
6150	9	18.175466	I-26 EB (Merge Analysis)	S
6150	10	18.556614	I-26 EB (Merge Analysis)	S
6151	1	23.968994	I-26 EB (Basic Analysis)	S
6151	2	23.156068	I-26 EB (Basic Analysis)	S
6151	3	24.240218	I-26 EB (Basic Analysis)	S
6151	4	24.071838	I-26 EB (Basic Analysis)	S
6151	5	24.220829	I-26 EB (Basic Analysis)	S
6151	6	24.784941	I-26 EB (Basic Analysis)	S
6151	7	26.785804	I-26 EB (Basic Analysis)	S
6151	8	23.54397	I-26 EB (Basic Analysis)	S
6151	9	24.296356	I-26 EB (Basic Analysis)	S
6151	10	23.909831	I-26 EB (Basic Analysis)	S
6152	1	23.968994	I-26 EB (Basic Analysis)	S
6152	2	23.156068	I-26 EB (Basic Analysis)	S
6152	3	24.240218	I-26 EB (Basic Analysis)	S
6152	4	24.071838	I-26 EB (Basic Analysis)	S
6152	5	24.220829	I-26 EB (Basic Analysis)	S
6152	6	24.784941	I-26 EB (Basic Analysis)	S
6152	7	26.785804	I-26 EB (Basic Analysis)	S
6152	8	23.54397	I-26 EB (Basic Analysis)	S
6152	9	24.296356	I-26 EB (Basic Analysis)	S
6152	10	23.909831	I-26 EB (Basic Analysis)	S
6159	1	98.163886	I-26 WB (Diverge Analysis)	N
6159	2	93.231963	I-26 WB (Diverge Analysis)	N
6159	3	87.553664	I-26 WB (Diverge Analysis)	N
6159	4	110.227133	I-26 WB (Diverge Analysis)	N
6159	5	118.399617	I-26 WB (Diverge Analysis)	N
6159	6	113.053738	I-26 WB (Diverge Analysis)	N
6159	7	102.543869	I-26 WB (Diverge Analysis)	N
6159	8	97.083002	I-26 WB (Diverge Analysis)	N
6159	9	105.951684	I-26 WB (Diverge Analysis)	N
6159	10	103.971806	I-26 WB (Diverge Analysis)	N
6160	1	98.163886	I-26 WB (Diverge Analysis)	N
6160	2	93.231963	I-26 WB (Diverge Analysis)	N
6160	3	87.553664	I-26 WB (Diverge Analysis)	N
6160	4	110.227133	I-26 WB (Diverge Analysis)	N
6160	5	118.399617	I-26 WB (Diverge Analysis)	N
6160	6	113.053738	I-26 WB (Diverge Analysis)	N
6160	7	102.543869	I-26 WB (Diverge Analysis)	N
6160	8	97.083002	I-26 WB (Diverge Analysis)	N
6160	9	105.951684	I-26 WB (Diverge Analysis)	N
6160	10	103.971806	I-26 WB (Diverge Analysis)	N
6165	1	87.514329	I-26 WB (Basic Analysis)	N
6165	2	67.892882	I-26 WB (Basic Analysis)	N
6165	3	64.864704	I-26 WB (Basic Analysis)	N
6165	4	58.532956	I-26 WB (Basic Analysis)	N
6165	5	54.843151	I-26 WB (Basic Analysis)	N

ID	Run	Density	Name (Type)	Direction
6165	6	84.015356	I-26 WB (Basic Analysis)	N
6165	7	108.049943	I-26 WB (Basic Analysis)	N
6165	8	93.023326	I-26 WB (Basic Analysis)	N
6165	9	94.45971	I-26 WB (Basic Analysis)	N
6165	10	86.075659	I-26 WB (Basic Analysis)	N
6166	1	20.819915	I-26 EB (Basic Analysis)	S
6166	2	20.465937	I-26 EB (Basic Analysis)	S
6166	3	20.15651	I-26 EB (Basic Analysis)	S
6166	4	20.222932	I-26 EB (Basic Analysis)	S
6166	5	20.346864	I-26 EB (Basic Analysis)	S
6166	6	20.346864	I-26 EB (Basic Analysis)	S
6166	7	20.920358	I-26 EB (Basic Analysis)	S
6166	8	19.398332	I-26 EB (Basic Analysis)	S
6166	9	20.022047	I-26 EB (Basic Analysis)	S
6166	10	20.856366	I-26 EB (Basic Analysis)	S
6174	1	89.958013	I-26 WB (Basic Analysis)	N
6174	2	85.290238	I-26 WB (Basic Analysis)	N
6174	3	85.996837	I-26 WB (Basic Analysis)	N
6174	4	88.820598	I-26 WB (Basic Analysis)	N
6174	5	88.348653	I-26 WB (Basic Analysis)	N
6174	6	95.280182	I-26 WB (Basic Analysis)	N
6174	7	98.388692	I-26 WB (Basic Analysis)	N
6174	8	96.095408	I-26 WB (Basic Analysis)	N
6174	9	100.038127	I-26 WB (Basic Analysis)	N
6174	10	96.66016	I-26 WB (Basic Analysis)	N
6175	1	89.958013	I-26 WB (Basic Analysis)	N
6175	2	85.290238	I-26 WB (Basic Analysis)	N
6175	3	85.996837	I-26 WB (Basic Analysis)	N
6175	4	88.820598	I-26 WB (Basic Analysis)	N
6175	5	88.348653	I-26 WB (Basic Analysis)	N
6175	6	95.280182	I-26 WB (Basic Analysis)	N
6175	7	98.388692	I-26 WB (Basic Analysis)	N
6175	8	96.095408	I-26 WB (Basic Analysis)	N
6175	9	100.038127	I-26 WB (Basic Analysis)	N
6175	10	96.66016	I-26 WB (Basic Analysis)	N
6177	1	134.151739	I-26 EB (Basic Analysis)	S
6177	2	123.924875	I-26 EB (Basic Analysis)	S
6177	3	115.282612	I-26 EB (Basic Analysis)	S
6177	4	122.012115	I-26 EB (Basic Analysis)	S
6177	5	108.38004	I-26 EB (Basic Analysis)	S
6177	6	122.495362	I-26 EB (Basic Analysis)	S
6177	7	121.441209	I-26 EB (Basic Analysis)	S
6177	8	120.616316	I-26 EB (Basic Analysis)	S
6177	9	117.80449	I-26 EB (Basic Analysis)	S
6177	10	133.924726	I-26 EB (Basic Analysis)	S
6178	1	143.093011	I-26 EB (Diverge Analysis)	S
6178	2	140.113545	I-26 EB (Diverge Analysis)	S
6178	3	139.138732	I-26 EB (Diverge Analysis)	S
6178	4	141.342541	I-26 EB (Diverge Analysis)	S
6178	5	128.124926	I-26 EB (Diverge Analysis)	S
6178	6	139.314304	I-26 EB (Diverge Analysis)	S
6178	7	142.390727	I-26 EB (Diverge Analysis)	S
6178	8	145.354471	I-26 EB (Diverge Analysis)	S
6178	9	140.118784	I-26 EB (Diverge Analysis)	S
6178	10	141.460463	I-26 EB (Diverge Analysis)	S
6185	1	121.683015	I-26 EB (Merge Analysis)	S
6185	2	121.067093	I-26 EB (Merge Analysis)	S

ID	Run	Density	Name (Type)	Direction
6185	3	108.602577	I-26 EB (Merge Analysis)	S
6185	4	112.684843	I-26 EB (Merge Analysis)	S
6185	5	100.853435	I-26 EB (Merge Analysis)	S
6185	6	109.911767	I-26 EB (Merge Analysis)	S
6185	7	115.417811	I-26 EB (Merge Analysis)	S
6185	8	118.6693	I-26 EB (Merge Analysis)	S
6185	9	113.091636	I-26 EB (Merge Analysis)	S
6185	10	127.825033	I-26 EB (Merge Analysis)	S
6186	1	122.187454	I-26 EB (Basic Analysis)	S
6186	2	117.760476	I-26 EB (Basic Analysis)	S
6186	3	105.32126	I-26 EB (Basic Analysis)	S
6186	4	110.34764	I-26 EB (Basic Analysis)	S
6186	5	100.108361	I-26 EB (Basic Analysis)	S
6186	6	108.256105	I-26 EB (Basic Analysis)	S
6186	7	112.482218	I-26 EB (Basic Analysis)	S
6186	8	116.271533	I-26 EB (Basic Analysis)	S
6186	9	112.16498	I-26 EB (Basic Analysis)	S
6186	10	123.941028	I-26 EB (Basic Analysis)	S
6200	1	124.550523	I-26 WB (Weaving Analysis)	NW
6200	2	128.361062	I-26 WB (Weaving Analysis)	NW
6200	3	122.572572	I-26 WB (Weaving Analysis)	NW
6200	4	129.143423	I-26 WB (Weaving Analysis)	NW
6200	5	127.270003	I-26 WB (Weaving Analysis)	NW
6200	6	131.433339	I-26 WB (Weaving Analysis)	NW
6200	7	133.053593	I-26 WB (Weaving Analysis)	NW
6200	8	131.082173	I-26 WB (Weaving Analysis)	NW
6200	9	128.197728	I-26 WB (Weaving Analysis)	NW
6200	10	132.761228	I-26 WB (Weaving Analysis)	NW
6204	1	117.707512	I-26 WB (Basic Analysis)	NW
6204	2	118.750457	I-26 WB (Basic Analysis)	NW
6204	3	115.47824	I-26 WB (Basic Analysis)	NW
6204	4	123.690209	I-26 WB (Basic Analysis)	NW
6204	5	120.659578	I-26 WB (Basic Analysis)	NW
6204	6	126.009831	I-26 WB (Basic Analysis)	NW
6204	7	117.530741	I-26 WB (Basic Analysis)	NW
6204	8	122.884921	I-26 WB (Basic Analysis)	NW
6204	9	121.67699	I-26 WB (Basic Analysis)	NW
6204	10	108.438848	I-26 WB (Basic Analysis)	NW
6205	1	35.296978	I-20 EB (Basic Analysis)	E
6205	2	46.426397	I-20 EB (Basic Analysis)	E
6205	3	78.180186	I-20 EB (Basic Analysis)	E
6205	4	24.521436	I-20 EB (Basic Analysis)	E
6205	5	24.674045	I-20 EB (Basic Analysis)	E
6205	6	26.695565	I-20 EB (Basic Analysis)	E
6205	7	63.474402	I-20 EB (Basic Analysis)	E
6205	8	49.624557	I-20 EB (Basic Analysis)	E
6205	9	72.684041	I-20 EB (Basic Analysis)	E
6205	10	76.114432	I-20 EB (Basic Analysis)	E
6206	1	54.010173	I-20 EB (Merge Analysis)	E
6206	2	82.608367	I-20 EB (Merge Analysis)	E
6206	3	102.122525	I-20 EB (Merge Analysis)	E
6206	4	51.157642	I-20 EB (Merge Analysis)	E
6206	5	23.306192	I-20 EB (Merge Analysis)	E
6206	6	48.190104	I-20 EB (Merge Analysis)	E
6206	7	86.881493	I-20 EB (Merge Analysis)	E
6206	8	77.682447	I-20 EB (Merge Analysis)	E
6206	9	87.21032	I-20 EB (Merge Analysis)	E

ID	Run	Density	Name (Type)	Direction
6206	10	101.064772	I-20 EB (Merge Analysis)	E
6207	1	54.010173	I-20 EB (Merge Analysis)	E
6207	2	82.608367	I-20 EB (Merge Analysis)	E
6207	3	102.122525	I-20 EB (Merge Analysis)	E
6207	4	51.157642	I-20 EB (Merge Analysis)	E
6207	5	23.306192	I-20 EB (Merge Analysis)	E
6207	6	48.190104	I-20 EB (Merge Analysis)	E
6207	7	86.881493	I-20 EB (Merge Analysis)	E
6207	8	77.682447	I-20 EB (Merge Analysis)	E
6207	9	87.21032	I-20 EB (Merge Analysis)	E
6207	10	101.064772	I-20 EB (Merge Analysis)	E
6208	1	52.252119	I-20 EB (Diverge Analysis)	E
6208	2	78.895023	I-20 EB (Diverge Analysis)	E
6208	3	97.670234	I-20 EB (Diverge Analysis)	E
6208	4	50.042831	I-20 EB (Diverge Analysis)	E
6208	5	23.83312	I-20 EB (Diverge Analysis)	E
6208	6	47.282342	I-20 EB (Diverge Analysis)	E
6208	7	83.229947	I-20 EB (Diverge Analysis)	E
6208	8	75.038106	I-20 EB (Diverge Analysis)	E
6208	9	83.540652	I-20 EB (Diverge Analysis)	E
6208	10	96.530488	I-20 EB (Diverge Analysis)	E
6209	1	52.252119	I-20 EB (Diverge Analysis)	E
6209	2	78.895023	I-20 EB (Diverge Analysis)	E
6209	3	97.670234	I-20 EB (Diverge Analysis)	E
6209	4	50.042831	I-20 EB (Diverge Analysis)	E
6209	5	23.83312	I-20 EB (Diverge Analysis)	E
6209	6	47.282342	I-20 EB (Diverge Analysis)	E
6209	7	83.229947	I-20 EB (Diverge Analysis)	E
6209	8	75.038106	I-20 EB (Diverge Analysis)	E
6209	9	83.540652	I-20 EB (Diverge Analysis)	E
6209	10	96.530488	I-20 EB (Diverge Analysis)	E
6216	1	55.202557	I-20 EB (Merge Analysis)	E
6216	2	16.990198	I-20 EB (Merge Analysis)	E
6216	3	26.449115	I-20 EB (Merge Analysis)	E
6216	4	51.292733	I-20 EB (Merge Analysis)	E
6216	5	25.95032	I-20 EB (Merge Analysis)	E
6216	6	15.849725	I-20 EB (Merge Analysis)	E
6216	7	47.330951	I-20 EB (Merge Analysis)	E
6216	8	15.95364	I-20 EB (Merge Analysis)	E
6216	9	16.057556	I-20 EB (Merge Analysis)	E
6216	10	21.549495	I-20 EB (Merge Analysis)	E
6217	1	21.883736	I-20 EB (Basic Analysis)	E
6217	2	21.121587	I-20 EB (Basic Analysis)	E
6217	3	19.880878	I-20 EB (Basic Analysis)	E
6217	4	22.137786	I-20 EB (Basic Analysis)	E
6217	5	22.075751	I-20 EB (Basic Analysis)	E
6217	6	22.453871	I-20 EB (Basic Analysis)	E
6217	7	23.871824	I-20 EB (Basic Analysis)	E
6217	8	22.359341	I-20 EB (Basic Analysis)	E
6217	9	21.490845	I-20 EB (Basic Analysis)	E
6217	10	24.781677	I-20 EB (Basic Analysis)	E
6220	1	18.848442	I-20 WB (Basic Analysis)	W
6220	2	19.127585	I-20 WB (Basic Analysis)	W
6220	3	19.562966	I-20 WB (Basic Analysis)	W
6220	4	20.129586	I-20 WB (Basic Analysis)	W
6220	5	20.381648	I-20 WB (Basic Analysis)	W
6220	6	20.175415	I-20 WB (Basic Analysis)	W

No Build PM

ID	Run	Density	Name (Type)	Direction
6220	7	17.236075	I-20 WB (Basic Analysis)	W
6220	8	18.298487	I-20 WB (Basic Analysis)	W
6220	9	18.533884	I-20 WB (Basic Analysis)	W
6220	10	17.117335	I-20 WB (Basic Analysis)	W
6223	1	84.311161	I-26 EB (Weaving Analysis)	SE
6223	2	83.896479	I-26 EB (Weaving Analysis)	SE
6223	3	72.873107	I-26 EB (Weaving Analysis)	SE
6223	4	92.461142	I-26 EB (Weaving Analysis)	SE
6223	5	75.204472	I-26 EB (Weaving Analysis)	SE
6223	6	71.550694	I-26 EB (Weaving Analysis)	SE
6223	7	66.620217	I-26 EB (Weaving Analysis)	SE
6223	8	74.198785	I-26 EB (Weaving Analysis)	SE
6223	9	81.434505	I-26 EB (Weaving Analysis)	SE
6223	10	83.214048	I-26 EB (Weaving Analysis)	SE
6227	1	15.76898	I-20 WB (Basic Analysis)	W
6227	2	16.877457	I-20 WB (Basic Analysis)	W
6227	3	14.201159	I-20 WB (Basic Analysis)	W
6227	4	16.954473	I-20 WB (Basic Analysis)	W
6227	5	16.019281	I-20 WB (Basic Analysis)	W
6227	6	16.06054	I-20 WB (Basic Analysis)	W
6227	7	15.590193	I-20 WB (Basic Analysis)	W
6227	8	15.095092	I-20 WB (Basic Analysis)	W
6227	9	18.084954	I-20 WB (Basic Analysis)	W
6227	10	17.686122	I-20 WB (Basic Analysis)	W
6229	1	58.461787	I-20 WB (Merge Analysis)	W
6229	2	67.130382	I-20 WB (Merge Analysis)	W
6229	3	45.737305	I-20 WB (Merge Analysis)	W
6229	4	66.047921	I-20 WB (Merge Analysis)	W
6229	5	50.194104	I-20 WB (Merge Analysis)	W
6229	6	65.255007	I-20 WB (Merge Analysis)	W
6229	7	52.167478	I-20 WB (Merge Analysis)	W
6229	8	49.274235	I-20 WB (Merge Analysis)	W
6229	9	66.468878	I-20 WB (Merge Analysis)	W
6229	10	62.802766	I-20 WB (Merge Analysis)	W
6230	1	58.461787	I-20 WB (Merge+Diverge Analysis)	W
6230	2	67.130382	I-20 WB (Merge+Diverge Analysis)	W
6230	3	45.737305	I-20 WB (Merge+Diverge Analysis)	W
6230	4	66.047921	I-20 WB (Merge+Diverge Analysis)	W
6230	5	50.194104	I-20 WB (Merge+Diverge Analysis)	W
6230	6	65.255007	I-20 WB (Merge+Diverge Analysis)	W
6230	7	52.167478	I-20 WB (Merge+Diverge Analysis)	W
6230	8	49.274235	I-20 WB (Merge+Diverge Analysis)	W
6230	9	66.468878	I-20 WB (Merge+Diverge Analysis)	W
6230	10	62.802766	I-20 WB (Merge+Diverge Analysis)	W
6231	1	59.024789	I-20 WB (Diverge Analysis)	W
6231	2	67.758555	I-20 WB (Diverge Analysis)	W
6231	3	46.165293	I-20 WB (Diverge Analysis)	W
6231	4	66.665965	I-20 WB (Diverge Analysis)	W
6231	5	50.663796	I-20 WB (Diverge Analysis)	W
6231	6	65.865632	I-20 WB (Diverge Analysis)	W
6231	7	52.655636	I-20 WB (Diverge Analysis)	W
6231	8	49.735319	I-20 WB (Diverge Analysis)	W
6231	9	67.132318	I-20 WB (Diverge Analysis)	W
6231	10	63.390444	I-20 WB (Diverge Analysis)	W
6234	1	26.442795	I-20 WB (Basic Analysis)	W
6234	2	33.207917	I-20 WB (Basic Analysis)	W
6234	3	24.305573	I-20 WB (Basic Analysis)	W

No Build PM

ID	Run	Density	Name (Type)	Direction
6234	4	31.88262	I-20 WB (Basic Analysis)	W
6234	5	25.81206	I-20 WB (Basic Analysis)	W
6234	6	30.50928	I-20 WB (Basic Analysis)	W
6234	7	26.413969	I-20 WB (Basic Analysis)	W
6234	8	22.887622	I-20 WB (Basic Analysis)	W
6234	9	31.679467	I-20 WB (Basic Analysis)	W
6234	10	28.978772	I-20 WB (Basic Analysis)	W
6238	1	24.503785	I-20 EB (Basic Analysis)	NE
6238	2	23.238221	I-20 EB (Basic Analysis)	NE
6238	3	25.53269	I-20 EB (Basic Analysis)	NE
6238	4	25.373225	I-20 EB (Basic Analysis)	NE
6238	5	23.999997	I-20 EB (Basic Analysis)	NE
6238	6	24.966944	I-20 EB (Basic Analysis)	NE
6238	7	23.659737	I-20 EB (Basic Analysis)	NE
6238	8	23.972573	I-20 EB (Basic Analysis)	NE
6238	9	25.781536	I-20 EB (Basic Analysis)	NE
6238	10	23.585591	I-20 EB (Basic Analysis)	NE
6241	1	24.629512	I-20 EB (Merge Analysis)	NE
6241	2	22.474236	I-20 EB (Merge Analysis)	NE
6241	3	22.718612	I-20 EB (Merge Analysis)	NE
6241	4	23.637704	I-20 EB (Merge Analysis)	NE
6241	5	25.751257	I-20 EB (Merge Analysis)	NE
6241	6	26.230472	I-20 EB (Merge Analysis)	NE
6241	7	22.890271	I-20 EB (Merge Analysis)	NE
6241	8	23.663929	I-20 EB (Merge Analysis)	NE
6241	9	23.396904	I-20 EB (Merge Analysis)	NE
6241	10	21.254741	I-20 EB (Merge Analysis)	NE
6242	1	24.629512	I-20 EB (Merge Analysis)	NE
6242	2	22.474236	I-20 EB (Merge Analysis)	NE
6242	3	22.718612	I-20 EB (Merge Analysis)	NE
6242	4	23.637704	I-20 EB (Merge Analysis)	NE
6242	5	25.751257	I-20 EB (Merge Analysis)	NE
6242	6	26.230472	I-20 EB (Merge Analysis)	NE
6242	7	22.890271	I-20 EB (Merge Analysis)	NE
6242	8	23.663929	I-20 EB (Merge Analysis)	NE
6242	9	23.396904	I-20 EB (Merge Analysis)	NE
6242	10	21.254741	I-20 EB (Merge Analysis)	NE
6246	1	122.520676	I-20 WB (Merge Analysis)	SW
6246	2	119.618714	I-20 WB (Merge Analysis)	SW
6246	3	128.618397	I-20 WB (Merge Analysis)	SW
6246	4	121.14782	I-20 WB (Merge Analysis)	SW
6246	5	129.175285	I-20 WB (Merge Analysis)	SW
6246	6	117.671611	I-20 WB (Merge Analysis)	SW
6246	7	133.502183	I-20 WB (Merge Analysis)	SW
6246	8	126.985126	I-20 WB (Merge Analysis)	SW
6246	9	118.714607	I-20 WB (Merge Analysis)	SW
6246	10	131.942363	I-20 WB (Merge Analysis)	SW
6247	1	122.520676	I-20 WB (Merge Analysis)	SW
6247	2	119.618714	I-20 WB (Merge Analysis)	SW
6247	3	128.618397	I-20 WB (Merge Analysis)	SW
6247	4	121.14782	I-20 WB (Merge Analysis)	SW
6247	5	129.175285	I-20 WB (Merge Analysis)	SW
6247	6	117.671611	I-20 WB (Merge Analysis)	SW
6247	7	133.502183	I-20 WB (Merge Analysis)	SW
6247	8	126.985126	I-20 WB (Merge Analysis)	SW
6247	9	118.714607	I-20 WB (Merge Analysis)	SW
6247	10	131.942363	I-20 WB (Merge Analysis)	SW

No Build PM

ID	Run	Density	Name (Type)	Direction
6249	1	118.334551	I-20 WB (Diverge Analysis)	SW
6249	2	116.154106	I-20 WB (Diverge Analysis)	SW
6249	3	118.309128	I-20 WB (Diverge Analysis)	SW
6249	4	116.531528	I-20 WB (Diverge Analysis)	SW
6249	5	120.81615	I-20 WB (Diverge Analysis)	SW
6249	6	115.172418	I-20 WB (Diverge Analysis)	SW
6249	7	132.019525	I-20 WB (Diverge Analysis)	SW
6249	8	118.588773	I-20 WB (Diverge Analysis)	SW
6249	9	122.847972	I-20 WB (Diverge Analysis)	SW
6249	10	134.970458	I-20 WB (Diverge Analysis)	SW
6251	1	131.407657	I-20 WB (Basic Analysis)	SW
6251	2	125.308871	I-20 WB (Basic Analysis)	SW
6251	3	135.160564	I-20 WB (Basic Analysis)	SW
6251	4	128.468169	I-20 WB (Basic Analysis)	SW
6251	5	138.57817	I-20 WB (Basic Analysis)	SW
6251	6	125.184685	I-20 WB (Basic Analysis)	SW
6251	7	134.775588	I-20 WB (Basic Analysis)	SW
6251	8	131.899435	I-20 WB (Basic Analysis)	SW
6251	9	120.822024	I-20 WB (Basic Analysis)	SW
6251	10	137.123949	I-20 WB (Basic Analysis)	SW
6254	1	27.186622	I-20 EB (Basic Analysis)	NE
6254	2	27.522507	I-20 EB (Basic Analysis)	NE
6254	3	29.154306	I-20 EB (Basic Analysis)	NE
6254	4	28.111559	I-20 EB (Basic Analysis)	NE
6254	5	27.250541	I-20 EB (Basic Analysis)	NE
6254	6	28.365979	I-20 EB (Basic Analysis)	NE
6254	7	27.174089	I-20 EB (Basic Analysis)	NE
6254	8	27.187876	I-20 EB (Basic Analysis)	NE
6254	9	28.307074	I-20 EB (Basic Analysis)	NE
6254	10	25.426987	I-20 EB (Basic Analysis)	NE
6258	1	25.391383	I-20 EB (Merge Analysis)	E
6258	2	22.99341	I-20 EB (Merge Analysis)	E
6258	3	25.216558	I-20 EB (Merge Analysis)	E
6258	4	24.605975	I-20 EB (Merge Analysis)	E
6258	5	25.005202	I-20 EB (Merge Analysis)	E
6258	6	25.138278	I-20 EB (Merge Analysis)	E
6258	7	23.416121	I-20 EB (Merge Analysis)	E
6258	8	24.402447	I-20 EB (Merge Analysis)	E
6258	9	24.433759	I-20 EB (Merge Analysis)	E
6258	10	22.583745	I-20 EB (Merge Analysis)	E
6259	1	29.570646	I-20 EB (Basic Analysis)	E
6259	2	29.801678	I-20 EB (Basic Analysis)	E
6259	3	29.552406	I-20 EB (Basic Analysis)	E
6259	4	30.889963	I-20 EB (Basic Analysis)	E
6259	5	30.03879	I-20 EB (Basic Analysis)	E
6259	6	30.493256	I-20 EB (Basic Analysis)	E
6259	7	29.684642	I-20 EB (Basic Analysis)	E
6259	8	29.458169	I-20 EB (Basic Analysis)	E
6259	9	31.127075	I-20 EB (Basic Analysis)	E
6259	10	27.793823	I-20 EB (Basic Analysis)	E
8539	1	27.700226	I-20 WB (Basic Analysis)	SW
8539	2	25.861816	I-20 WB (Basic Analysis)	SW
8539	3	29.850539	I-20 WB (Basic Analysis)	SW
8539	4	25.983618	I-20 WB (Basic Analysis)	SW
8539	5	25.807176	I-20 WB (Basic Analysis)	SW
8539	6	25.842464	I-20 WB (Basic Analysis)	SW
8539	7	24.129271	I-20 WB (Basic Analysis)	SW

No Build PM

ID	Run	Density	Name (Type)	Direction
8539	8	25.760504	I-20 WB (Basic Analysis)	SW
8539	9	25.835634	I-20 WB (Basic Analysis)	SW
8539	10	25.454292	I-20 WB (Basic Analysis)	SW
8542	1	24.580328	I-20 EB (Basic Analysis)	NE
8542	2	25.304915	I-20 EB (Basic Analysis)	NE
8542	3	24.085912	I-20 EB (Basic Analysis)	NE
8542	4	24.771638	I-20 EB (Basic Analysis)	NE
8542	5	24.447607	I-20 EB (Basic Analysis)	NE
8542	6	25.382634	I-20 EB (Basic Analysis)	NE
8542	7	24.228796	I-20 EB (Basic Analysis)	NE
8542	8	25.733568	I-20 EB (Basic Analysis)	NE
8542	9	25.461549	I-20 EB (Basic Analysis)	NE
8542	10	23.725412	I-20 EB (Basic Analysis)	NE
8543	1	29.160258	I-20 EB (Diverge Analysis)	NE
8543	2	28.946125	I-20 EB (Diverge Analysis)	NE
8543	3	27.828525	I-20 EB (Diverge Analysis)	NE
8543	4	29.054658	I-20 EB (Diverge Analysis)	NE
8543	5	29.456525	I-20 EB (Diverge Analysis)	NE
8543	6	33.33439	I-20 EB (Diverge Analysis)	NE
8543	7	30.245591	I-20 EB (Diverge Analysis)	NE
8543	8	31.967457	I-20 EB (Diverge Analysis)	NE
8543	9	28.168792	I-20 EB (Diverge Analysis)	NE
8543	10	28.852258	I-20 EB (Diverge Analysis)	NE
8551	1	49.860785	I-26 WB (Diverge Analysis)	NW
8551	2	42.785587	I-26 WB (Diverge Analysis)	NW
8551	3	47.308786	I-26 WB (Diverge Analysis)	NW
8551	4	49.564518	I-26 WB (Diverge Analysis)	NW
8551	5	42.166654	I-26 WB (Diverge Analysis)	NW
8551	6	42.190121	I-26 WB (Diverge Analysis)	NW
8551	7	41.603454	I-26 WB (Diverge Analysis)	NW
8551	8	52.066651	I-26 WB (Diverge Analysis)	NW
8551	9	52.753051	I-26 WB (Diverge Analysis)	NW
8551	10	57.695716	I-26 WB (Diverge Analysis)	NW
8552	1	70.112718	I-26 EB (Basic Analysis)	SE
8552	2	66.453415	I-26 EB (Basic Analysis)	SE
8552	3	52.750677	I-26 EB (Basic Analysis)	SE
8552	4	70.222053	I-26 EB (Basic Analysis)	SE
8552	5	56.497105	I-26 EB (Basic Analysis)	SE
8552	6	52.308212	I-26 EB (Basic Analysis)	SE
8552	7	53.630481	I-26 EB (Basic Analysis)	SE
8552	8	53.222183	I-26 EB (Basic Analysis)	SE
8552	9	55.346526	I-26 EB (Basic Analysis)	SE
8552	10	68.467569	I-26 EB (Basic Analysis)	SE
8553	1	129.840134	I-26 EB (Basic Analysis)	S
8553	2	122.091148	I-26 EB (Basic Analysis)	S
8553	3	119.516572	I-26 EB (Basic Analysis)	S
8553	4	124.792013	I-26 EB (Basic Analysis)	S
8553	5	114.22261	I-26 EB (Basic Analysis)	S
8553	6	126.23337	I-26 EB (Basic Analysis)	S
8553	7	121.033703	I-26 EB (Basic Analysis)	S
8553	8	126.834497	I-26 EB (Basic Analysis)	S
8553	9	119.913956	I-26 EB (Basic Analysis)	S
8553	10	132.93333	I-26 EB (Basic Analysis)	S
8554	1	81.878188	I-26 WB (Basic Analysis)	N
8554	2	80.274735	I-26 WB (Basic Analysis)	N
8554	3	81.304886	I-26 WB (Basic Analysis)	N
8554	4	83.967154	I-26 WB (Basic Analysis)	N

No Build PM

ID	Run	Density	Name (Type)	Direction
8554	5	81.362216	I-26 WB (Basic Analysis)	N
8554	6	82.607355	I-26 WB (Basic Analysis)	N
8554	7	87.670323	I-26 WB (Basic Analysis)	N
8554	8	85.360993	I-26 WB (Basic Analysis)	N
8554	9	81.851314	I-26 WB (Basic Analysis)	N
8554	10	85.086884	I-26 WB (Basic Analysis)	N
8559	1	84.233575	I-126 NB (Diverge Analysis)	W
8559	2	93.376772	I-126 NB (Diverge Analysis)	W
8559	3	90.243974	I-126 NB (Diverge Analysis)	W
8559	4	91.745839	I-126 NB (Diverge Analysis)	W
8559	5	84.154375	I-126 NB (Diverge Analysis)	W
8559	6	94.206905	I-126 NB (Diverge Analysis)	W
8559	7	93.321038	I-126 NB (Diverge Analysis)	W
8559	8	90.425839	I-126 NB (Diverge Analysis)	W
8559	9	87.627441	I-126 NB (Diverge Analysis)	W
8559	10	91.983439	I-126 NB (Diverge Analysis)	W
8560	1	14.952705	I-126 SB (Basic Analysis)	E
8560	2	14.619553	I-126 SB (Basic Analysis)	E
8560	3	14.937422	I-126 SB (Basic Analysis)	E
8560	4	14.230774	I-126 SB (Basic Analysis)	E
8560	5	14.994272	I-126 SB (Basic Analysis)	E
8560	6	15.835404	I-126 SB (Basic Analysis)	E
8560	7	15.565215	I-126 SB (Basic Analysis)	E
8560	8	15.843962	I-126 SB (Basic Analysis)	E
8560	9	15.036451	I-126 SB (Basic Analysis)	E
8560	10	14.920306	I-126 SB (Basic Analysis)	E
8658	1	121.011123	I-20 WB (Basic Analysis)	SW
8658	2	117.445928	I-20 WB (Basic Analysis)	SW
8658	3	129.034916	I-20 WB (Basic Analysis)	SW
8658	4	120.028031	I-20 WB (Basic Analysis)	SW
8658	5	127.234468	I-20 WB (Basic Analysis)	SW
8658	6	117.485693	I-20 WB (Basic Analysis)	SW
8658	7	132.029761	I-20 WB (Basic Analysis)	SW
8658	8	124.817228	I-20 WB (Basic Analysis)	SW
8658	9	116.107275	I-20 WB (Basic Analysis)	SW
8658	10	128.319148	I-20 WB (Basic Analysis)	SW
8659	1	30.113597	I-20 EB (Basic Analysis)	NE
8659	2	28.400469	I-20 EB (Basic Analysis)	NE
8659	3	29.472658	I-20 EB (Basic Analysis)	NE
8659	4	30.06529	I-20 EB (Basic Analysis)	NE
8659	5	30.326523	I-20 EB (Basic Analysis)	NE
8659	6	30.556182	I-20 EB (Basic Analysis)	NE
8659	7	28.696245	I-20 EB (Basic Analysis)	NE
8659	8	29.316674	I-20 EB (Basic Analysis)	NE
8659	9	30.162443	I-20 EB (Basic Analysis)	NE
8659	10	27.812964	I-20 EB (Basic Analysis)	NE
8763	1	17.71016	I-26 EB (Basic Analysis)	SE
8763	2	17.076546	I-26 EB (Basic Analysis)	SE
8763	3	16.328232	I-26 EB (Basic Analysis)	SE
8763	4	16.386722	I-26 EB (Basic Analysis)	SE
8763	5	16.734184	I-26 EB (Basic Analysis)	SE
8763	6	17.05289	I-26 EB (Basic Analysis)	SE
8763	7	16.669509	I-26 EB (Basic Analysis)	SE
8763	8	16.768908	I-26 EB (Basic Analysis)	SE
8763	9	16.551446	I-26 EB (Basic Analysis)	SE
8763	10	16.991254	I-26 EB (Basic Analysis)	SE
8764	1	22.674304	I-20 WB (Basic Analysis)	S

No Build PM

ID	Run	Density	Name (Type)	Direction
8764	2	21.972839	I-20 WB (Basic Analysis)	S
8764	3	22.226837	I-20 WB (Basic Analysis)	S
8764	4	21.800273	I-20 WB (Basic Analysis)	S
8764	5	22.564077	I-20 WB (Basic Analysis)	S
8764	6	21.493974	I-20 WB (Basic Analysis)	S
8764	7	21.756585	I-20 WB (Basic Analysis)	S
8764	8	21.705806	I-20 WB (Basic Analysis)	S
8764	9	22.562877	I-20 WB (Basic Analysis)	S
8764	10	21.891511	I-20 WB (Basic Analysis)	S
8765	1	19.561025	I-20 EB (Basic Analysis)	NE
8765	2	20.16503	I-20 EB (Basic Analysis)	NE
8765	3	18.956959	I-20 EB (Basic Analysis)	NE
8765	4	19.403031	I-20 EB (Basic Analysis)	NE
8765	5	18.846363	I-20 EB (Basic Analysis)	NE
8765	6	19.526886	I-20 EB (Basic Analysis)	NE
8765	7	20.497263	I-20 EB (Basic Analysis)	NE
8765	8	20.370314	I-20 EB (Basic Analysis)	NE
8765	9	20.01817	I-20 EB (Basic Analysis)	NE
8765	10	18.994295	I-20 EB (Basic Analysis)	NE
8770	1	113.035966	I-20 WB (Diverge Analysis)	SW
8770	2	115.831431	I-20 WB (Diverge Analysis)	SW
8770	3	122.586896	I-20 WB (Diverge Analysis)	SW
8770	4	114.910365	I-20 WB (Diverge Analysis)	SW
8770	5	125.353029	I-20 WB (Diverge Analysis)	SW
8770	6	110.991434	I-20 WB (Diverge Analysis)	SW
8770	7	122.792229	I-20 WB (Diverge Analysis)	SW
8770	8	116.535432	I-20 WB (Diverge Analysis)	SW
8770	9	109.955967	I-20 WB (Diverge Analysis)	SW
8770	10	124.898362	I-20 WB (Diverge Analysis)	SW
8773	1	89.608224	I-26 WB (Basic Analysis)	N
8773	2	80.788696	I-26 WB (Basic Analysis)	N
8773	3	78.241259	I-26 WB (Basic Analysis)	N
8773	4	100.211989	I-26 WB (Basic Analysis)	N
8773	5	106.495865	I-26 WB (Basic Analysis)	N
8773	6	98.311356	I-26 WB (Basic Analysis)	N
8773	7	99.781768	I-26 WB (Basic Analysis)	N
8773	8	87.499847	I-26 WB (Basic Analysis)	N
8773	9	98.302515	I-26 WB (Basic Analysis)	N
8773	10	93.519992	I-26 WB (Basic Analysis)	N
8774	1	26.776137	I-20 EB (Diverge Analysis)	NE
8774	2	24.579165	I-20 EB (Diverge Analysis)	NE
8774	3	24.865602	I-20 EB (Diverge Analysis)	NE
8774	4	25.885318	I-20 EB (Diverge Analysis)	NE
8774	5	28.766875	I-20 EB (Diverge Analysis)	NE
8774	6	27.678414	I-20 EB (Diverge Analysis)	NE
8774	7	26.638647	I-20 EB (Diverge Analysis)	NE
8774	8	27.260216	I-20 EB (Diverge Analysis)	NE
8774	9	27.174285	I-20 EB (Diverge Analysis)	NE
8774	10	25.515814	I-20 EB (Diverge Analysis)	NE
8783	1	18.739374	I-26 WB (Basic Analysis)	NW
8783	2	19.061035	I-26 WB (Basic Analysis)	NW
8783	3	19.290825	I-26 WB (Basic Analysis)	NW
8783	4	19.501113	I-26 WB (Basic Analysis)	NW
8783	5	18.935686	I-26 WB (Basic Analysis)	NW
8783	6	18.989531	I-26 WB (Basic Analysis)	NW
8783	7	19.471428	I-26 WB (Basic Analysis)	NW
8783	8	18.531252	I-26 WB (Basic Analysis)	NW

No Build PM

ID	Run	Density	Name (Type)	Direction
8783	9	19.391689	I-26 WB (Basic Analysis)	NW
8783	10	18.759958	I-26 WB (Basic Analysis)	NW
8784	1	18.538948	I-26 EB (Basic Analysis)	SE
8784	2	22.291968	I-26 EB (Basic Analysis)	SE
8784	3	21.414289	I-26 EB (Basic Analysis)	SE
8784	4	18.048956	I-26 EB (Basic Analysis)	SE
8784	5	18.657408	I-26 EB (Basic Analysis)	SE
8784	6	17.720499	I-26 EB (Basic Analysis)	SE
8784	7	20.590455	I-26 EB (Basic Analysis)	SE
8784	8	19.023556	I-26 EB (Basic Analysis)	SE
8784	9	21.398135	I-26 EB (Basic Analysis)	SE
8784	10	21.091217	I-26 EB (Basic Analysis)	SE
8817	1	19.81621	I-26 WB (Basic Analysis)	NW
8817	2	20.584483	I-26 WB (Basic Analysis)	NW
8817	3	21.433	I-26 WB (Basic Analysis)	NW
8817	4	21.114409	I-26 WB (Basic Analysis)	NW
8817	5	20.565416	I-26 WB (Basic Analysis)	NW
8817	6	20.248413	I-26 WB (Basic Analysis)	NW
8817	7	20.431146	I-26 WB (Basic Analysis)	NW
8817	8	19.967958	I-26 WB (Basic Analysis)	NW
8817	9	20.718752	I-26 WB (Basic Analysis)	NW
8817	10	20.655193	I-26 WB (Basic Analysis)	NW

RPA AM

ID	Run	Density	Name (Type)	Direction
2806	1	37.671435	I-20 EB (Basic Analysis)	NE
2806	2	42.555665	I-20 EB (Basic Analysis)	NE
2806	3	37.582901	I-20 EB (Basic Analysis)	NE
2806	4	37.923211	I-20 EB (Basic Analysis)	NE
2806	5	40.717901	I-20 EB (Basic Analysis)	NE
2806	6	37.740555	I-20 EB (Basic Analysis)	NE
2806	7	40.669128	I-20 EB (Basic Analysis)	NE
2806	8	38.393887	I-20 EB (Basic Analysis)	NE
2806	9	36.496668	I-20 EB (Basic Analysis)	NE
2806	10	38.355338	I-20 EB (Basic Analysis)	NE
2807	1	37.671435	I-20 EB (Basic Analysis)	NE
2807	2	42.555665	I-20 EB (Basic Analysis)	NE
2807	3	37.582901	I-20 EB (Basic Analysis)	NE
2807	4	37.923211	I-20 EB (Basic Analysis)	NE
2807	5	40.717901	I-20 EB (Basic Analysis)	NE
2807	6	37.740555	I-20 EB (Basic Analysis)	NE
2807	7	40.669128	I-20 EB (Basic Analysis)	NE
2807	8	38.393887	I-20 EB (Basic Analysis)	NE
2807	9	36.496668	I-20 EB (Basic Analysis)	NE
2807	10	38.355338	I-20 EB (Basic Analysis)	NE
2808	1	39.847983	I-20 EB (Diverge Analysis)	NE
2808	2	47.40616	I-20 EB (Diverge Analysis)	NE
2808	3	40.078307	I-20 EB (Diverge Analysis)	NE
2808	4	40.211756	I-20 EB (Diverge Analysis)	NE
2808	5	44.634367	I-20 EB (Diverge Analysis)	NE
2808	6	38.798181	I-20 EB (Diverge Analysis)	NE
2808	7	44.372411	I-20 EB (Diverge Analysis)	NE
2808	8	39.707614	I-20 EB (Diverge Analysis)	NE
2808	9	36.909131	I-20 EB (Diverge Analysis)	NE
2808	10	42.391429	I-20 EB (Diverge Analysis)	NE
2813	1	14.163418	I-20 WB (Merge Analysis)	S
2813	2	12.383929	I-20 WB (Merge Analysis)	S
2813	3	12.997859	I-20 WB (Merge Analysis)	S
2813	4	11.990879	I-20 WB (Merge Analysis)	S
2813	5	13.068087	I-20 WB (Merge Analysis)	S
2813	6	12.936692	I-20 WB (Merge Analysis)	S
2813	7	13.535896	I-20 WB (Merge Analysis)	S
2813	8	12.006737	I-20 WB (Merge Analysis)	S
2813	9	12.488139	I-20 WB (Merge Analysis)	S
2813	10	14.072801	I-20 WB (Merge Analysis)	S
2814	1	15.51989	I-20 WB (Basic Analysis)	S
2814	2	14.826592	I-20 WB (Basic Analysis)	S
2814	3	15.303573	I-20 WB (Basic Analysis)	S
2814	4	15.040722	I-20 WB (Basic Analysis)	S
2814	5	15.065812	I-20 WB (Basic Analysis)	S
2814	6	15.527117	I-20 WB (Basic Analysis)	S
2814	7	15.996618	I-20 WB (Basic Analysis)	S
2814	8	15.376429	I-20 WB (Basic Analysis)	S
2814	9	15.29834	I-20 WB (Basic Analysis)	S
2814	10	16.144402	I-20 WB (Basic Analysis)	S
2822	1	10.644008	I-20 WB (Merge Analysis)	SW
2822	2	11.158176	I-20 WB (Merge Analysis)	SW
2822	3	11.250775	I-20 WB (Merge Analysis)	SW
2822	4	10.046989	I-20 WB (Merge Analysis)	SW
2822	5	10.94861	I-20 WB (Merge Analysis)	SW
2822	6	9.403669	I-20 WB (Merge Analysis)	SW
2822	7	10.166393	I-20 WB (Merge Analysis)	SW
2822	8	10.636698	I-20 WB (Merge Analysis)	SW
2822	9	10.190761	I-20 WB (Merge Analysis)	SW
2822	10	10.736607	I-20 WB (Merge Analysis)	SW
2823	1	98.81845	I-20 WB (Basic Analysis)	SW
2823	2	253.683181	I-20 WB (Basic Analysis)	SW
2823	3	265.482398	I-20 WB (Basic Analysis)	SW
2823	4	103.243157	I-20 WB (Basic Analysis)	SW

RPA AM

ID	Run	Density	Name (Type)	Direction
2823	5	0	I-20 WB (Basic Analysis)	SW
2823	6	101.768256	I-20 WB (Basic Analysis)	SW
2823	7	95.868644	I-20 WB (Basic Analysis)	SW
2823	8	140.115711	I-20 WB (Basic Analysis)	SW
2823	9	76.694918	I-20 WB (Basic Analysis)	SW
2823	10	194.687097	I-20 WB (Basic Analysis)	SW
2826	1	29.468817	I-20 EB (Basic Analysis)	NE
2826	2	55.147459	I-20 EB (Basic Analysis)	NE
2826	3	29.138167	I-20 EB (Basic Analysis)	NE
2826	4	29.381372	I-20 EB (Basic Analysis)	NE
2826	5	31.613942	I-20 EB (Basic Analysis)	NE
2826	6	35.898725	I-20 EB (Basic Analysis)	NE
2826	7	34.281	I-20 EB (Basic Analysis)	NE
2826	8	35.319405	I-20 EB (Basic Analysis)	NE
2826	9	30.67118	I-20 EB (Basic Analysis)	NE
2826	10	30.993631	I-20 EB (Basic Analysis)	NE
2829	1	45.529159	I-20 EB (Merge Analysis)	NE
2829	2	77.461307	I-20 EB (Merge Analysis)	NE
2829	3	45.858918	I-20 EB (Merge Analysis)	NE
2829	4	46.46885	I-20 EB (Merge Analysis)	NE
2829	5	49.382141	I-20 EB (Merge Analysis)	NE
2829	6	67.035444	I-20 EB (Merge Analysis)	NE
2829	7	62.803114	I-20 EB (Merge Analysis)	NE
2829	8	61.932846	I-20 EB (Merge Analysis)	NE
2829	9	47.014317	I-20 EB (Merge Analysis)	NE
2829	10	46.225869	I-20 EB (Merge Analysis)	NE
2830	1	43.993854	I-20 EB (Basic Analysis)	NE
2830	2	52.168654	I-20 EB (Basic Analysis)	NE
2830	3	45.994771	I-20 EB (Basic Analysis)	NE
2830	4	44.915329	I-20 EB (Basic Analysis)	NE
2830	5	47.298	I-20 EB (Basic Analysis)	NE
2830	6	47.837721	I-20 EB (Basic Analysis)	NE
2830	7	51.365654	I-20 EB (Basic Analysis)	NE
2830	8	46.652967	I-20 EB (Basic Analysis)	NE
2830	9	42.585313	I-20 EB (Basic Analysis)	NE
2830	10	47.311164	I-20 EB (Basic Analysis)	NE
2831	1	14.771339	I-20 WB (Basic Analysis)	SW
2831	2	14.027394	I-20 WB (Basic Analysis)	SW
2831	3	15.033512	I-20 WB (Basic Analysis)	SW
2831	4	14.616724	I-20 WB (Basic Analysis)	SW
2831	5	13.489602	I-20 WB (Basic Analysis)	SW
2831	6	15.584748	I-20 WB (Basic Analysis)	SW
2831	7	16.745481	I-20 WB (Basic Analysis)	SW
2831	8	15.098495	I-20 WB (Basic Analysis)	SW
2831	9	16.707388	I-20 WB (Basic Analysis)	SW
2831	10	14.524851	I-20 WB (Basic Analysis)	SW
2837	1	12.784213	I-20 WB (Merge Analysis)	SW
2837	2	12.528107	I-20 WB (Merge Analysis)	SW
2837	3	12.886656	I-20 WB (Merge Analysis)	SW
2837	4	12.351846	I-20 WB (Merge Analysis)	SW
2837	5	12.639588	I-20 WB (Merge Analysis)	SW
2837	6	13.094553	I-20 WB (Merge Analysis)	SW
2837	7	12.482912	I-20 WB (Merge Analysis)	SW
2837	8	13.183437	I-20 WB (Merge Analysis)	SW
2837	9	12.65616	I-20 WB (Merge Analysis)	SW
2837	10	13.391335	I-20 WB (Merge Analysis)	SW
2838	1	30.091117	I-20 WB (Diverge Analysis)	SW
2838	2	40.200419	I-20 WB (Diverge Analysis)	SW
2838	3	44.13439	I-20 WB (Diverge Analysis)	SW
2838	4	41.632434	I-20 WB (Diverge Analysis)	SW
2838	5	40.754182	I-20 WB (Diverge Analysis)	SW
2838	6	46.345682	I-20 WB (Diverge Analysis)	SW
2838	7	34.150373	I-20 WB (Diverge Analysis)	SW
2838	8	55.366252	I-20 WB (Diverge Analysis)	SW

RPA AM

ID	Run	Density	Name (Type)	Direction
2838	9	43.505455	I-20 WB (Diverge Analysis)	SW
2838	10	48.727363	I-20 WB (Diverge Analysis)	SW
2839	1	30.091117	I-20 WB (Diverge Analysis)	SW
2839	2	40.200419	I-20 WB (Diverge Analysis)	SW
2839	3	44.13439	I-20 WB (Diverge Analysis)	SW
2839	4	41.632434	I-20 WB (Diverge Analysis)	SW
2839	5	40.754182	I-20 WB (Diverge Analysis)	SW
2839	6	46.345682	I-20 WB (Diverge Analysis)	SW
2839	7	34.150373	I-20 WB (Diverge Analysis)	SW
2839	8	55.366252	I-20 WB (Diverge Analysis)	SW
2839	9	43.505455	I-20 WB (Diverge Analysis)	SW
2839	10	48.727363	I-20 WB (Diverge Analysis)	SW
2840	1	30.091117	I-20 WB (Diverge Analysis)	SW
2840	2	40.200419	I-20 WB (Diverge Analysis)	SW
2840	3	44.13439	I-20 WB (Diverge Analysis)	SW
2840	4	41.632434	I-20 WB (Diverge Analysis)	SW
2840	5	40.754182	I-20 WB (Diverge Analysis)	SW
2840	6	46.345682	I-20 WB (Diverge Analysis)	SW
2840	7	34.150373	I-20 WB (Diverge Analysis)	SW
2840	8	55.366252	I-20 WB (Diverge Analysis)	SW
2840	9	43.505455	I-20 WB (Diverge Analysis)	SW
2840	10	48.727363	I-20 WB (Diverge Analysis)	SW
2843	1	31.130778	I-20 EB (Basic Analysis)	NE
2843	2	33.559032	I-20 EB (Basic Analysis)	NE
2843	3	30.760785	I-20 EB (Basic Analysis)	NE
2843	4	28.675294	I-20 EB (Basic Analysis)	NE
2843	5	31.156604	I-20 EB (Basic Analysis)	NE
2843	6	33.929025	I-20 EB (Basic Analysis)	NE
2843	7	31.77251	I-20 EB (Basic Analysis)	NE
2843	8	31.565056	I-20 EB (Basic Analysis)	NE
2843	9	29.561536	I-20 EB (Basic Analysis)	NE
2843	10	29.618242	I-20 EB (Basic Analysis)	NE
2848	1	17.96126	I-20 EB (Basic Analysis)	NE
2848	2	18.825502	I-20 EB (Basic Analysis)	NE
2848	3	18.367962	I-20 EB (Basic Analysis)	NE
2848	4	18.621445	I-20 EB (Basic Analysis)	NE
2848	5	18.949066	I-20 EB (Basic Analysis)	NE
2848	6	18.679344	I-20 EB (Basic Analysis)	NE
2848	7	19.187015	I-20 EB (Basic Analysis)	NE
2848	8	18.442101	I-20 EB (Basic Analysis)	NE
2848	9	18.525418	I-20 EB (Basic Analysis)	NE
2848	10	18.592496	I-20 EB (Basic Analysis)	NE
2852	1	10.78486	I-20 WB (Merge Analysis)	SW
2852	2	10.39179	I-20 WB (Merge Analysis)	SW
2852	3	11.486771	I-20 WB (Merge Analysis)	SW
2852	4	11.462205	I-20 WB (Merge Analysis)	SW
2852	5	9.984682	I-20 WB (Merge Analysis)	SW
2852	6	11.511338	I-20 WB (Merge Analysis)	SW
2852	7	12.729154	I-20 WB (Merge Analysis)	SW
2852	8	11.676287	I-20 WB (Merge Analysis)	SW
2852	9	12.290459	I-20 WB (Merge Analysis)	SW
2852	10	11.476243	I-20 WB (Merge Analysis)	SW
2863	1	19.975697	I-20 EB (Basic Analysis)	NE
2863	2	22.421621	I-20 EB (Basic Analysis)	NE
2863	3	20.226964	I-20 EB (Basic Analysis)	NE
2863	4	20.811944	I-20 EB (Basic Analysis)	NE
2863	5	23.469873	I-20 EB (Basic Analysis)	NE
2863	6	20.215185	I-20 EB (Basic Analysis)	NE
2863	7	21.302699	I-20 EB (Basic Analysis)	NE
2863	8	21.051432	I-20 EB (Basic Analysis)	NE
2863	9	19.225823	I-20 EB (Basic Analysis)	NE
2863	10	20.643124	I-20 EB (Basic Analysis)	NE
4563	1	46.453022	I-126 SB (Merge Analysis)	E
4563	2	46.735131	I-126 SB (Merge Analysis)	E

RPA AM

ID	Run	Density	Name (Type)	Direction
4563	3	44.61011	I-126 SB (Merge Analysis)	E
4563	4	46.223041	I-126 SB (Merge Analysis)	E
4563	5	40.41833	I-126 SB (Merge Analysis)	E
4563	6	40.314072	I-126 SB (Merge Analysis)	E
4563	7	43.230227	I-126 SB (Merge Analysis)	E
4563	8	41.221729	I-126 SB (Merge Analysis)	E
4563	9	43.607395	I-126 SB (Merge Analysis)	E
4563	10	44.794094	I-126 SB (Merge Analysis)	E
4566	1	15.272677	I-126 NB (Basic Analysis)	W
4566	2	15.744056	I-126 NB (Basic Analysis)	W
4566	3	15.580135	I-126 NB (Basic Analysis)	W
4566	4	14.970315	I-126 NB (Basic Analysis)	W
4566	5	14.870094	I-126 NB (Basic Analysis)	W
4566	6	14.777517	I-126 NB (Basic Analysis)	W
4566	7	15.152922	I-126 NB (Basic Analysis)	W
4566	8	15.495202	I-126 NB (Basic Analysis)	W
4566	9	15.949595	I-126 NB (Basic Analysis)	W
4566	10	15.915621	I-126 NB (Basic Analysis)	W
4570	1	12.842359	I-126 NB (Basic Analysis)	W
4570	2	12.975477	I-126 NB (Basic Analysis)	W
4570	3	13.60779	I-126 NB (Basic Analysis)	W
4570	4	12.772234	I-126 NB (Basic Analysis)	W
4570	5	13.039659	I-126 NB (Basic Analysis)	W
4570	6	13.881158	I-126 NB (Basic Analysis)	W
4570	7	13.354627	I-126 NB (Basic Analysis)	W
4570	8	13.859764	I-126 NB (Basic Analysis)	W
4570	9	13.758736	I-126 NB (Basic Analysis)	W
4570	10	13.491311	I-126 NB (Basic Analysis)	W
4573	1	52.104154	I-126 SB (Basic Analysis)	E
4573	2	52.703866	I-126 SB (Basic Analysis)	E
4573	3	50.048376	I-126 SB (Basic Analysis)	E
4573	4	53.096689	I-126 SB (Basic Analysis)	E
4573	5	47.350986	I-126 SB (Basic Analysis)	E
4573	6	47.762141	I-126 SB (Basic Analysis)	E
4573	7	52.261284	I-126 SB (Basic Analysis)	E
4573	8	48.484937	I-126 SB (Basic Analysis)	E
4573	9	52.368656	I-126 SB (Basic Analysis)	E
4573	10	52.041302	I-126 SB (Basic Analysis)	E
4579	1	34.613279	I-126 SB (Diverge Analysis)	E
4579	2	37.599272	I-126 SB (Diverge Analysis)	E
4579	3	33.413065	I-126 SB (Diverge Analysis)	E
4579	4	34.898306	I-126 SB (Diverge Analysis)	E
4579	5	32.478488	I-126 SB (Diverge Analysis)	E
4579	6	31.755257	I-126 SB (Diverge Analysis)	E
4579	7	34.217732	I-126 SB (Diverge Analysis)	E
4579	8	33.346171	I-126 SB (Diverge Analysis)	E
4579	9	34.176044	I-126 SB (Diverge Analysis)	E
4579	10	32.009261	I-126 SB (Diverge Analysis)	E
4589	1	12.213396	I-126 NB (Merge Analysis)	NW
4589	2	11.214589	I-126 NB (Merge Analysis)	NW
4589	3	13.062124	I-126 NB (Merge Analysis)	NW
4589	4	12.218571	I-126 NB (Merge Analysis)	NW
4589	5	11.9417	I-126 NB (Merge Analysis)	NW
4589	6	10.797988	I-126 NB (Merge Analysis)	NW
4589	7	11.654478	I-126 NB (Merge Analysis)	NW
4589	8	12.151294	I-126 NB (Merge Analysis)	NW
4589	9	12.195283	I-126 NB (Merge Analysis)	NW
4589	10	12.081429	I-126 NB (Merge Analysis)	NW
4599	1	9.801944	I-126 NB (Basic Analysis)	NW
4599	2	9.716561	I-126 NB (Basic Analysis)	NW
4599	3	11.754881	I-126 NB (Basic Analysis)	NW
4599	4	10.59678	I-126 NB (Basic Analysis)	NW
4599	5	10.795489	I-126 NB (Basic Analysis)	NW
4599	6	9.610997	I-126 NB (Basic Analysis)	NW

RPA AM

ID	Run	Density	Name (Type)	Direction
4599	7	10.710106	I-126 NB (Basic Analysis)	NW
4599	8	10.573494	I-126 NB (Basic Analysis)	NW
4599	9	10.041015	I-126 NB (Basic Analysis)	NW
4599	10	10.306478	I-126 NB (Basic Analysis)	NW
4601	1	11.509104	I-126 NB (Basic Analysis)	NW
4601	2	11.972947	I-126 NB (Basic Analysis)	NW
4601	3	10.747076	I-126 NB (Basic Analysis)	NW
4601	4	10.912734	I-126 NB (Basic Analysis)	NW
4601	5	11.343446	I-126 NB (Basic Analysis)	NW
4601	6	11.695469	I-126 NB (Basic Analysis)	NW
4601	7	9.678581	I-126 NB (Basic Analysis)	NW
4601	8	11.64163	I-126 NB (Basic Analysis)	NW
4601	9	11.745167	I-126 NB (Basic Analysis)	NW
4601	10	11.15708	I-126 NB (Basic Analysis)	NW
4604	1	15.648117	I-26 WB (Basic Analysis)	NW
4604	2	16.084022	I-26 WB (Basic Analysis)	NW
4604	3	15.747773	I-26 WB (Basic Analysis)	NW
4604	4	15.186402	I-26 WB (Basic Analysis)	NW
4604	5	15.5205	I-26 WB (Basic Analysis)	NW
4604	6	15.161309	I-26 WB (Basic Analysis)	NW
4604	7	15.345565	I-26 WB (Basic Analysis)	NW
4604	8	14.508886	I-26 WB (Basic Analysis)	NW
4604	9	15.186402	I-26 WB (Basic Analysis)	NW
4604	10	15.768564	I-26 WB (Basic Analysis)	NW
4610	1	14.854131	I-26 EB (Basic Analysis)	SE
4610	2	15.45747	I-26 EB (Basic Analysis)	SE
4610	3	14.507531	I-26 EB (Basic Analysis)	SE
4610	4	14.84215	I-26 EB (Basic Analysis)	SE
4610	5	14.784811	I-26 EB (Basic Analysis)	SE
4610	6	13.690242	I-26 EB (Basic Analysis)	SE
4610	7	14.130979	I-26 EB (Basic Analysis)	SE
4610	8	13.975223	I-26 EB (Basic Analysis)	SE
4610	9	14.260205	I-26 EB (Basic Analysis)	SE
4610	10	14.433933	I-26 EB (Basic Analysis)	SE
4646	1	24.101639	I-26 WB (Basic Analysis)	NW
4646	2	24.430328	I-26 WB (Basic Analysis)	NW
4646	3	22.431361	I-26 WB (Basic Analysis)	NW
4646	4	19.770544	I-26 WB (Basic Analysis)	NW
4646	5	24.374429	I-26 WB (Basic Analysis)	NW
4646	6	23.289978	I-26 WB (Basic Analysis)	NW
4646	7	22.147392	I-26 WB (Basic Analysis)	NW
4646	8	22.652723	I-26 WB (Basic Analysis)	NW
4646	9	23.155819	I-26 WB (Basic Analysis)	NW
4646	10	22.236831	I-26 WB (Basic Analysis)	NW
4651	1	20.987681	I-26 WB (Basic Analysis)	NW
4651	2	21.963916	I-26 WB (Basic Analysis)	NW
4651	3	22.319778	I-26 WB (Basic Analysis)	NW
4651	4	21.444439	I-26 WB (Basic Analysis)	NW
4651	5	23.379184	I-26 WB (Basic Analysis)	NW
4651	6	21.959826	I-26 WB (Basic Analysis)	NW
4651	7	20.669996	I-26 WB (Basic Analysis)	NW
4651	8	20.226873	I-26 WB (Basic Analysis)	NW
4651	9	23.270107	I-26 WB (Basic Analysis)	NW
4651	10	21.89847	I-26 WB (Basic Analysis)	NW
4654	1	28.062819	I-26 WB (Merge Analysis)	NW
4654	2	27.173657	I-26 WB (Merge Analysis)	NW
4654	3	26.202085	I-26 WB (Merge Analysis)	NW
4654	4	24.577738	I-26 WB (Merge Analysis)	NW
4654	5	25.215332	I-26 WB (Merge Analysis)	NW
4654	6	25.8963	I-26 WB (Merge Analysis)	NW
4654	7	24.994126	I-26 WB (Merge Analysis)	NW
4654	8	25.8963	I-26 WB (Merge Analysis)	NW
4654	9	24.278459	I-26 WB (Merge Analysis)	NW
4654	10	26.343049	I-26 WB (Merge Analysis)	NW

RPA AM

ID	Run	Density	Name (Type)	Direction
4677	1	28.293626	I-26 WB (Basic Analysis)	NW
4677	2	27.787719	I-26 WB (Basic Analysis)	NW
4677	3	27.835412	I-26 WB (Basic Analysis)	NW
4677	4	26.653659	I-26 WB (Basic Analysis)	NW
4677	5	27.683122	I-26 WB (Basic Analysis)	NW
4677	6	27.287443	I-26 WB (Basic Analysis)	NW
4677	7	26.633129	I-26 WB (Basic Analysis)	NW
4677	8	27.417191	I-26 WB (Basic Analysis)	NW
4677	9	27.412658	I-26 WB (Basic Analysis)	NW
4677	10	27.653471	I-26 WB (Basic Analysis)	NW
4687	1	41.406467	I-26 EB (Basic Analysis)	SE
4687	2	40.850799	I-26 EB (Basic Analysis)	SE
4687	3	40.220612	I-26 EB (Basic Analysis)	SE
4687	4	39.093636	I-26 EB (Basic Analysis)	SE
4687	5	40.615283	I-26 EB (Basic Analysis)	SE
4687	6	40.807559	I-26 EB (Basic Analysis)	SE
4687	7	39.886659	I-26 EB (Basic Analysis)	SE
4687	8	39.38067	I-26 EB (Basic Analysis)	SE
4687	9	42.830596	I-26 EB (Basic Analysis)	SE
4687	10	40.445087	I-26 EB (Basic Analysis)	SE
4701	1	21.237826	I-26 WB (Weaving Analysis)	NW
4701	2	22.124691	I-26 WB (Weaving Analysis)	NW
4701	3	21.812612	I-26 WB (Weaving Analysis)	NW
4701	4	20.503953	I-26 WB (Weaving Analysis)	NW
4701	5	21.648039	I-26 WB (Weaving Analysis)	NW
4701	6	21.075691	I-26 WB (Weaving Analysis)	NW
4701	7	21.338398	I-26 WB (Weaving Analysis)	NW
4701	8	21.464571	I-26 WB (Weaving Analysis)	NW
4701	9	21.654134	I-26 WB (Weaving Analysis)	NW
4701	10	21.293903	I-26 WB (Weaving Analysis)	NW
4712	1	21.806338	I-26 WB (Basic Analysis)	NW
4712	2	21.710021	I-26 WB (Basic Analysis)	NW
4712	3	22.214268	I-26 WB (Basic Analysis)	NW
4712	4	20.747796	I-26 WB (Basic Analysis)	NW
4712	5	21.544771	I-26 WB (Basic Analysis)	NW
4712	6	21.294536	I-26 WB (Basic Analysis)	NW
4712	7	20.535332	I-26 WB (Basic Analysis)	NW
4712	8	20.331367	I-26 WB (Basic Analysis)	NW
4712	9	20.930042	I-26 WB (Basic Analysis)	NW
4712	10	22.186884	I-26 WB (Basic Analysis)	NW
4714	1	34.362478	I-26 EB (Basic Analysis)	SE
4714	2	34.58529	I-26 EB (Basic Analysis)	SE
4714	3	33.628992	I-26 EB (Basic Analysis)	SE
4714	4	34.157558	I-26 EB (Basic Analysis)	SE
4714	5	34.366545	I-26 EB (Basic Analysis)	SE
4714	6	35.835145	I-26 EB (Basic Analysis)	SE
4714	7	34.503972	I-26 EB (Basic Analysis)	SE
4714	8	34.285227	I-26 EB (Basic Analysis)	SE
4714	9	35.127679	I-26 EB (Basic Analysis)	SE
4714	10	34.167316	I-26 EB (Basic Analysis)	SE
4720	1	28.313759	I-26 EB (Merge Analysis)	SE
4720	2	27.29118	I-26 EB (Merge Analysis)	SE
4720	3	28.33145	I-26 EB (Merge Analysis)	SE
4720	4	28.660516	I-26 EB (Merge Analysis)	SE
4720	5	28.99135	I-26 EB (Merge Analysis)	SE
4720	6	27.278796	I-26 EB (Merge Analysis)	SE
4720	7	28.556135	I-26 EB (Merge Analysis)	SE
4720	8	25.891768	I-26 EB (Merge Analysis)	SE
4720	9	27.466327	I-26 EB (Merge Analysis)	SE
4720	10	27.1638	I-26 EB (Merge Analysis)	SE
4725	1	19.739428	I-26 WB (Merge Analysis)	NW
4725	2	20.815677	I-26 WB (Merge Analysis)	NW
4725	3	21.561823	I-26 WB (Merge Analysis)	NW
4725	4	19.448881	I-26 WB (Merge Analysis)	NW

RPA AM

ID	Run	Density	Name (Type)	Direction
4725	5	19.184252	I-26 WB (Merge Analysis)	NW
4725	6	20.459656	I-26 WB (Merge Analysis)	NW
4725	7	20.190934	I-26 WB (Merge Analysis)	NW
4725	8	21.178519	I-26 WB (Merge Analysis)	NW
4725	9	21.767797	I-26 WB (Merge Analysis)	NW
4725	10	20.345074	I-26 WB (Merge Analysis)	NW
4727	1	23.126665	I-26 WB (Basic Analysis)	NW
4727	2	24.614065	I-26 WB (Basic Analysis)	NW
4727	3	23.829438	I-26 WB (Basic Analysis)	NW
4727	4	20.41676	I-26 WB (Basic Analysis)	NW
4727	5	22.840241	I-26 WB (Basic Analysis)	NW
4727	6	25.042357	I-26 WB (Basic Analysis)	NW
4727	7	20.993183	I-26 WB (Basic Analysis)	NW
4727	8	21.458962	I-26 WB (Basic Analysis)	NW
4727	9	22.660038	I-26 WB (Basic Analysis)	NW
4727	10	21.226932	I-26 WB (Basic Analysis)	NW
4728	1	20.601878	I-26 WB (Diverge Analysis)	NW
4728	2	20.573405	I-26 WB (Diverge Analysis)	NW
4728	3	21.469026	I-26 WB (Diverge Analysis)	NW
4728	4	19.928868	I-26 WB (Diverge Analysis)	NW
4728	5	20.128183	I-26 WB (Diverge Analysis)	NW
4728	6	20.182541	I-26 WB (Diverge Analysis)	NW
4728	7	20.006523	I-26 WB (Diverge Analysis)	NW
4728	8	19.607894	I-26 WB (Diverge Analysis)	NW
4728	9	19.962519	I-26 WB (Diverge Analysis)	NW
4728	10	21.595863	I-26 WB (Diverge Analysis)	NW
4729	1	20.601878	I-26 WB (Diverge Analysis)	NW
4729	2	20.573405	I-26 WB (Diverge Analysis)	NW
4729	3	21.469026	I-26 WB (Diverge Analysis)	NW
4729	4	19.928868	I-26 WB (Diverge Analysis)	NW
4729	5	20.128183	I-26 WB (Diverge Analysis)	NW
4729	6	20.182541	I-26 WB (Diverge Analysis)	NW
4729	7	20.006523	I-26 WB (Diverge Analysis)	NW
4729	8	19.607894	I-26 WB (Diverge Analysis)	NW
4729	9	19.962519	I-26 WB (Diverge Analysis)	NW
4729	10	21.595863	I-26 WB (Diverge Analysis)	NW
4730	1	20.601878	I-26 WB (Diverge Analysis)	NW
4730	2	20.573405	I-26 WB (Diverge Analysis)	NW
4730	3	21.469026	I-26 WB (Diverge Analysis)	NW
4730	4	19.928868	I-26 WB (Diverge Analysis)	NW
4730	5	20.128183	I-26 WB (Diverge Analysis)	NW
4730	6	20.182541	I-26 WB (Diverge Analysis)	NW
4730	7	20.006523	I-26 WB (Diverge Analysis)	NW
4730	8	19.607894	I-26 WB (Diverge Analysis)	NW
4730	9	19.962519	I-26 WB (Diverge Analysis)	NW
4730	10	21.595863	I-26 WB (Diverge Analysis)	NW
4732	1	18.241613	I-26 WB (Basic Analysis)	NW
4732	2	18.428538	I-26 WB (Basic Analysis)	NW
4732	3	18.067884	I-26 WB (Basic Analysis)	NW
4732	4	18.309786	I-26 WB (Basic Analysis)	NW
4732	5	17.705031	I-26 WB (Basic Analysis)	NW
4732	6	17.23882	I-26 WB (Basic Analysis)	NW
4732	7	18.246012	I-26 WB (Basic Analysis)	NW
4732	8	19.314779	I-26 WB (Basic Analysis)	NW
4732	9	19.466517	I-26 WB (Basic Analysis)	NW
4732	10	19.624853	I-26 WB (Basic Analysis)	NW
4733	1	30.991764	I-26 EB (Basic Analysis)	SE
4733	2	33.619791	I-26 EB (Basic Analysis)	SE
4733	3	32.294754	I-26 EB (Basic Analysis)	SE
4733	4	30.482473	I-26 EB (Basic Analysis)	SE
4733	5	32.144833	I-26 EB (Basic Analysis)	SE
4733	6	31.240897	I-26 EB (Basic Analysis)	SE
4733	7	32.138219	I-26 EB (Basic Analysis)	SE
4733	8	31.366566	I-26 EB (Basic Analysis)	SE

RPA AM

ID	Run	Density	Name (Type)	Direction
4733	9	31.313653	I-26 EB (Basic Analysis)	SE
4733	10	33.203099	I-26 EB (Basic Analysis)	SE
4736	1	38.295875	I-26 EB (Basic Analysis)	SE
4736	2	38.461658	I-26 EB (Basic Analysis)	SE
4736	3	38.984512	I-26 EB (Basic Analysis)	SE
4736	4	41.751813	I-26 EB (Basic Analysis)	SE
4736	5	37.683753	I-26 EB (Basic Analysis)	SE
4736	6	40.336281	I-26 EB (Basic Analysis)	SE
4736	7	36.127944	I-26 EB (Basic Analysis)	SE
4736	8	37.645496	I-26 EB (Basic Analysis)	SE
4736	9	41.981359	I-26 EB (Basic Analysis)	SE
4736	10	37.811279	I-26 EB (Basic Analysis)	SE
4737	1	29.401439	I-26 EB (Diverge Analysis)	SE
4737	2	30.671109	I-26 EB (Diverge Analysis)	SE
4737	3	29.643935	I-26 EB (Diverge Analysis)	SE
4737	4	30.069445	I-26 EB (Diverge Analysis)	SE
4737	5	29.717141	I-26 EB (Diverge Analysis)	SE
4737	6	29.518111	I-26 EB (Diverge Analysis)	SE
4737	7	29.12234	I-26 EB (Diverge Analysis)	SE
4737	8	29.785772	I-26 EB (Diverge Analysis)	SE
4737	9	29.433467	I-26 EB (Diverge Analysis)	SE
4737	10	28.273606	I-26 EB (Diverge Analysis)	SE
4739	1	17.584096	I-26 WB (Weaving Analysis)	NW
4739	2	19.1649	I-26 WB (Weaving Analysis)	NW
4739	3	17.501959	I-26 WB (Weaving Analysis)	NW
4739	4	16.256435	I-26 WB (Weaving Analysis)	NW
4739	5	16.850247	I-26 WB (Weaving Analysis)	NW
4739	6	17.192261	I-26 WB (Weaving Analysis)	NW
4739	7	17.291903	I-26 WB (Weaving Analysis)	NW
4739	8	18.887519	I-26 WB (Weaving Analysis)	NW
4739	9	18.940033	I-26 WB (Weaving Analysis)	NW
4739	10	16.622686	I-26 WB (Weaving Analysis)	NW
4741	1	26.300831	I-26 WB (Basic Analysis)	NW
4741	2	19.798494	I-26 WB (Basic Analysis)	NW
4741	3	22.780601	I-26 WB (Basic Analysis)	NW
4741	4	20.269353	I-26 WB (Basic Analysis)	NW
4741	5	24.798567	I-26 WB (Basic Analysis)	NW
4741	6	24.35013	I-26 WB (Basic Analysis)	NW
4741	7	23.699896	I-26 WB (Basic Analysis)	NW
4741	8	18.946464	I-26 WB (Basic Analysis)	NW
4741	9	19.01373	I-26 WB (Basic Analysis)	NW
4741	10	21.569821	I-26 WB (Basic Analysis)	NW
4742	1	15.584002	I-26 WB (Diverge Analysis)	NW
4742	2	14.910061	I-26 WB (Diverge Analysis)	NW
4742	3	17.527239	I-26 WB (Diverge Analysis)	NW
4742	4	14.376623	I-26 WB (Diverge Analysis)	NW
4742	5	15.322046	I-26 WB (Diverge Analysis)	NW
4742	6	16.75566	I-26 WB (Diverge Analysis)	NW
4742	7	16.36987	I-26 WB (Diverge Analysis)	NW
4742	8	15.207738	I-26 WB (Diverge Analysis)	NW
4742	9	14.852907	I-26 WB (Diverge Analysis)	NW
4742	10	16.13411	I-26 WB (Diverge Analysis)	NW
4745	1	29.283843	I-26 EB (Basic Analysis)	SE
4745	2	31.441671	I-26 EB (Basic Analysis)	SE
4745	3	29.108153	I-26 EB (Basic Analysis)	SE
4745	4	30.038407	I-26 EB (Basic Analysis)	SE
4745	5	31.281748	I-26 EB (Basic Analysis)	SE
4745	6	30.069941	I-26 EB (Basic Analysis)	SE
4745	7	30.045164	I-26 EB (Basic Analysis)	SE
4745	8	30.121747	I-26 EB (Basic Analysis)	SE
4745	9	29.822173	I-26 EB (Basic Analysis)	SE
4745	10	31.995768	I-26 EB (Basic Analysis)	SE
4753	1	16.305311	I-26 WB (Basic Analysis)	NW
4753	2	17.734282	I-26 WB (Basic Analysis)	NW

RPA AM

ID	Run	Density	Name (Type)	Direction
4753	3	18.080243	I-26 WB (Basic Analysis)	NW
4753	4	15.802485	I-26 WB (Basic Analysis)	NW
4753	5	19.300778	I-26 WB (Basic Analysis)	NW
4753	6	16.610444	I-26 WB (Basic Analysis)	NW
4753	7	14.728071	I-26 WB (Basic Analysis)	NW
4753	8	16.700695	I-26 WB (Basic Analysis)	NW
4753	9	16.047452	I-26 WB (Basic Analysis)	NW
4753	10	17.156247	I-26 WB (Basic Analysis)	NW
4755	1	28.273583	I-26 EB (Basic Analysis)	SE
4755	2	32.803604	I-26 EB (Basic Analysis)	SE
4755	3	30.935361	I-26 EB (Basic Analysis)	SE
4755	4	29.285808	I-26 EB (Basic Analysis)	SE
4755	5	32.053807	I-26 EB (Basic Analysis)	SE
4755	6	30.897871	I-26 EB (Basic Analysis)	SE
4755	7	29.6857	I-26 EB (Basic Analysis)	SE
4755	8	30.354268	I-26 EB (Basic Analysis)	SE
4755	9	31.778882	I-26 EB (Basic Analysis)	SE
4755	10	30.304282	I-26 EB (Basic Analysis)	SE
4756	1	21.798925	I-26 EB (Diverge Analysis)	SE
4756	2	24.609675	I-26 EB (Diverge Analysis)	SE
4756	3	24.615921	I-26 EB (Diverge Analysis)	SE
4756	4	22.167446	I-26 EB (Diverge Analysis)	SE
4756	5	23.895536	I-26 EB (Diverge Analysis)	SE
4756	6	23.129347	I-26 EB (Diverge Analysis)	SE
4756	7	23.608215	I-26 EB (Diverge Analysis)	SE
4756	8	22.854518	I-26 EB (Diverge Analysis)	SE
4756	9	23.152249	I-26 EB (Diverge Analysis)	SE
4756	10	24.085002	I-26 EB (Diverge Analysis)	SE
4760	1	9.366162	I-26 WB (Merge Analysis)	NW
4760	2	9.533415	I-26 WB (Merge Analysis)	NW
4760	3	9.301037	I-26 WB (Merge Analysis)	NW
4760	4	8.908807	I-26 WB (Merge Analysis)	NW
4760	5	9.579299	I-26 WB (Merge Analysis)	NW
4760	6	9.039057	I-26 WB (Merge Analysis)	NW
4760	7	9.517134	I-26 WB (Merge Analysis)	NW
4760	8	10.680504	I-26 WB (Merge Analysis)	NW
4760	9	10.280873	I-26 WB (Merge Analysis)	NW
4760	10	9.07902	I-26 WB (Merge Analysis)	NW
4761	1	16.585013	I-26 WB (Basic Analysis)	NW
4761	2	16.827869	I-26 WB (Basic Analysis)	NW
4761	3	16.868233	I-26 WB (Basic Analysis)	NW
4761	4	15.819777	I-26 WB (Basic Analysis)	NW
4761	5	17.015939	I-26 WB (Basic Analysis)	NW
4761	6	16.554567	I-26 WB (Basic Analysis)	NW
4761	7	16.119247	I-26 WB (Basic Analysis)	NW
4761	8	16.48356	I-26 WB (Basic Analysis)	NW
4761	9	17.036563	I-26 WB (Basic Analysis)	NW
4761	10	16.546768	I-26 WB (Basic Analysis)	NW
4762	1	16.585013	I-26 WB (Basic Analysis)	NW
4762	2	16.827869	I-26 WB (Basic Analysis)	NW
4762	3	16.868233	I-26 WB (Basic Analysis)	NW
4762	4	15.819777	I-26 WB (Basic Analysis)	NW
4762	5	17.015939	I-26 WB (Basic Analysis)	NW
4762	6	16.554567	I-26 WB (Basic Analysis)	NW
4762	7	16.119247	I-26 WB (Basic Analysis)	NW
4762	8	16.48356	I-26 WB (Basic Analysis)	NW
4762	9	17.036563	I-26 WB (Basic Analysis)	NW
4762	10	16.546768	I-26 WB (Basic Analysis)	NW
4763	1	16.585013	I-26 WB (Basic Analysis)	NW
4763	2	16.827869	I-26 WB (Basic Analysis)	NW
4763	3	16.868233	I-26 WB (Basic Analysis)	NW
4763	4	15.819777	I-26 WB (Basic Analysis)	NW
4763	5	17.015939	I-26 WB (Basic Analysis)	NW
4763	6	16.554567	I-26 WB (Basic Analysis)	NW

RPA AM

ID	Run	Density	Name (Type)	Direction
4763	7	16.119247	I-26 WB (Basic Analysis)	NW
4763	8	16.48356	I-26 WB (Basic Analysis)	NW
4763	9	17.036563	I-26 WB (Basic Analysis)	NW
4763	10	16.546768	I-26 WB (Basic Analysis)	NW
4764	1	16.585013	I-26 WB (Basic Analysis)	NW
4764	2	16.827869	I-26 WB (Basic Analysis)	NW
4764	3	16.868233	I-26 WB (Basic Analysis)	NW
4764	4	15.819777	I-26 WB (Basic Analysis)	NW
4764	5	17.015939	I-26 WB (Basic Analysis)	NW
4764	6	16.554567	I-26 WB (Basic Analysis)	NW
4764	7	16.119247	I-26 WB (Basic Analysis)	NW
4764	8	16.48356	I-26 WB (Basic Analysis)	NW
4764	9	17.036563	I-26 WB (Basic Analysis)	NW
4764	10	16.546768	I-26 WB (Basic Analysis)	NW
4769	1	28.042624	I-26 EB (Basic Analysis)	SE
4769	2	29.000495	I-26 EB (Basic Analysis)	SE
4769	3	28.376622	I-26 EB (Basic Analysis)	SE
4769	4	28.256211	I-26 EB (Basic Analysis)	SE
4769	5	28.517794	I-26 EB (Basic Analysis)	SE
4769	6	28.484506	I-26 EB (Basic Analysis)	SE
4769	7	28.48519	I-26 EB (Basic Analysis)	SE
4769	8	27.785845	I-26 EB (Basic Analysis)	SE
4769	9	28.264737	I-26 EB (Basic Analysis)	SE
4769	10	28.33844	I-26 EB (Basic Analysis)	SE
6079	1	10.092827	CD ROAD I-20 WB TO I-20 (Basic Analysis)	NW
6079	2	12.128301	CD ROAD I-20 WB TO I-20 (Basic Analysis)	NW
6079	3	10.856943	CD ROAD I-20 WB TO I-20 (Basic Analysis)	NW
6079	4	11.295902	CD ROAD I-20 WB TO I-20 (Basic Analysis)	NW
6079	5	11.120318	CD ROAD I-20 WB TO I-20 (Basic Analysis)	NW
6079	6	11.451977	CD ROAD I-20 WB TO I-20 (Basic Analysis)	NW
6079	7	9.403497	CD ROAD I-20 WB TO I-20 (Basic Analysis)	NW
6079	8	10.398473	CD ROAD I-20 WB TO I-20 (Basic Analysis)	NW
6079	9	11.250381	CD ROAD I-20 WB TO I-20 (Basic Analysis)	NW
6079	10	12.281124	CD ROAD I-20 WB TO I-20 (Basic Analysis)	NW
6149	1	20.751695	I-26 EB (Merge Analysis)	S
6149	2	22.465039	I-26 EB (Merge Analysis)	S
6149	3	21.380023	I-26 EB (Merge Analysis)	S
6149	4	20.258227	I-26 EB (Merge Analysis)	S
6149	5	20.276617	I-26 EB (Merge Analysis)	S
6149	6	22.348568	I-26 EB (Merge Analysis)	S
6149	7	21.684992	I-26 EB (Merge Analysis)	S
6149	8	20.233707	I-26 EB (Merge Analysis)	S
6149	9	21.338645	I-26 EB (Merge Analysis)	S
6149	10	20.71185	I-26 EB (Merge Analysis)	S
6150	1	20.751695	I-26 EB (Merge Analysis)	S
6150	2	22.465039	I-26 EB (Merge Analysis)	S
6150	3	21.380023	I-26 EB (Merge Analysis)	S
6150	4	20.258227	I-26 EB (Merge Analysis)	S
6150	5	20.276617	I-26 EB (Merge Analysis)	S
6150	6	22.348568	I-26 EB (Merge Analysis)	S
6150	7	21.684992	I-26 EB (Merge Analysis)	S
6150	8	20.233707	I-26 EB (Merge Analysis)	S
6150	9	21.338645	I-26 EB (Merge Analysis)	S
6150	10	20.71185	I-26 EB (Merge Analysis)	S
6151	1	20.751695	I-26 EB (Merge Analysis)	S
6151	2	22.465039	I-26 EB (Merge Analysis)	S
6151	3	21.380023	I-26 EB (Merge Analysis)	S
6151	4	20.258227	I-26 EB (Merge Analysis)	S
6151	5	20.276617	I-26 EB (Merge Analysis)	S
6151	6	22.348568	I-26 EB (Merge Analysis)	S
6151	7	21.684992	I-26 EB (Merge Analysis)	S
6151	8	20.233707	I-26 EB (Merge Analysis)	S
6151	9	21.338645	I-26 EB (Merge Analysis)	S
6151	10	20.71185	I-26 EB (Merge Analysis)	S

RPA AM

ID	Run	Density	Name (Type)	Direction
6152	1	23.437537	I-26 EB (Basic Analysis)	S
6152	2	25.325395	I-26 EB (Basic Analysis)	S
6152	3	23.077527	I-26 EB (Basic Analysis)	S
6152	4	25.086559	I-26 EB (Basic Analysis)	S
6152	5	23.77823	I-26 EB (Basic Analysis)	S
6152	6	25.337688	I-26 EB (Basic Analysis)	S
6152	7	25.216514	I-26 EB (Basic Analysis)	S
6152	8	23.279484	I-26 EB (Basic Analysis)	S
6152	9	24.770453	I-26 EB (Basic Analysis)	S
6152	10	24.141752	I-26 EB (Basic Analysis)	S
6159	1	63.563758	I-26 WB (Diverge Analysis)	N
6159	2	49.258758	I-26 WB (Diverge Analysis)	N
6159	3	32.47289	I-26 WB (Diverge Analysis)	N
6159	4	57.470859	I-26 WB (Diverge Analysis)	N
6159	5	32.043509	I-26 WB (Diverge Analysis)	N
6159	6	49.951307	I-26 WB (Diverge Analysis)	N
6159	7	32.957674	I-26 WB (Diverge Analysis)	N
6159	8	65.736825	I-26 WB (Diverge Analysis)	N
6159	9	57.750957	I-26 WB (Diverge Analysis)	N
6159	10	39.633854	I-26 WB (Diverge Analysis)	N
6160	1	63.563758	I-26 WB (Diverge Analysis)	N
6160	2	49.258758	I-26 WB (Diverge Analysis)	N
6160	3	32.47289	I-26 WB (Diverge Analysis)	N
6160	4	57.470859	I-26 WB (Diverge Analysis)	N
6160	5	32.043509	I-26 WB (Diverge Analysis)	N
6160	6	49.951307	I-26 WB (Diverge Analysis)	N
6160	7	32.957674	I-26 WB (Diverge Analysis)	N
6160	8	65.736825	I-26 WB (Diverge Analysis)	N
6160	9	57.750957	I-26 WB (Diverge Analysis)	N
6160	10	39.633854	I-26 WB (Diverge Analysis)	N
6165	1	22.00789	I-26 WB (Basic Analysis)	N
6165	2	21.421911	I-26 WB (Basic Analysis)	N
6165	3	20.958154	I-26 WB (Basic Analysis)	N
6165	4	22.479642	I-26 WB (Basic Analysis)	N
6165	5	21.983902	I-26 WB (Basic Analysis)	N
6165	6	21.574974	I-26 WB (Basic Analysis)	N
6165	7	21.347664	I-26 WB (Basic Analysis)	N
6165	8	21.847974	I-26 WB (Basic Analysis)	N
6165	9	21.772585	I-26 WB (Basic Analysis)	N
6165	10	21.750882	I-26 WB (Basic Analysis)	N
6178	1	21.325831	I-26 EB (Basic Analysis)	S
6178	2	22.019893	I-26 EB (Basic Analysis)	S
6178	3	21.087383	I-26 EB (Basic Analysis)	S
6178	4	22.195947	I-26 EB (Basic Analysis)	S
6178	5	21.191372	I-26 EB (Basic Analysis)	S
6178	6	21.587978	I-26 EB (Basic Analysis)	S
6178	7	21.424983	I-26 EB (Basic Analysis)	S
6178	8	21.60007	I-26 EB (Basic Analysis)	S
6178	9	20.917133	I-26 EB (Basic Analysis)	S
6178	10	21.400316	I-26 EB (Basic Analysis)	S
6207	1	18.334229	I-20 EB (Basic Analysis)	E
6207	2	19.607123	I-20 EB (Basic Analysis)	E
6207	3	18.910086	I-20 EB (Basic Analysis)	E
6207	4	18.59264	I-20 EB (Basic Analysis)	E
6207	5	19.775426	I-20 EB (Basic Analysis)	E
6207	6	19.287087	I-20 EB (Basic Analysis)	E
6207	7	19.92923	I-20 EB (Basic Analysis)	E
6207	8	19.16539	I-20 EB (Basic Analysis)	E
6207	9	18.643907	I-20 EB (Basic Analysis)	E
6207	10	19.322301	I-20 EB (Basic Analysis)	E
6216	1	19.975697	I-20 EB (Basic Analysis)	NE
6216	2	22.421621	I-20 EB (Basic Analysis)	NE
6216	3	20.226964	I-20 EB (Basic Analysis)	NE
6216	4	20.811944	I-20 EB (Basic Analysis)	NE

ID	Run	Density	Name (Type)	Direction
6216	5	23.469873	I-20 EB (Basic Analysis)	NE
6216	6	20.215185	I-20 EB (Basic Analysis)	NE
6216	7	21.302699	I-20 EB (Basic Analysis)	NE
6216	8	21.051432	I-20 EB (Basic Analysis)	NE
6216	9	19.225823	I-20 EB (Basic Analysis)	NE
6216	10	20.643124	I-20 EB (Basic Analysis)	NE
6223	1	38.071854	I-26 EB (Basic Analysis)	SE
6223	2	37.168307	I-26 EB (Basic Analysis)	SE
6223	3	37.765072	I-26 EB (Basic Analysis)	SE
6223	4	37.440609	I-26 EB (Basic Analysis)	SE
6223	5	37.050722	I-26 EB (Basic Analysis)	SE
6223	6	37.204555	I-26 EB (Basic Analysis)	SE
6223	7	36.450421	I-26 EB (Basic Analysis)	SE
6223	8	37.090507	I-26 EB (Basic Analysis)	SE
6223	9	36.146291	I-26 EB (Basic Analysis)	SE
6223	10	35.899629	I-26 EB (Basic Analysis)	SE
6234	1	14.635059	I-20 WB (Basic Analysis)	SW
6234	2	14.386365	I-20 WB (Basic Analysis)	SW
6234	3	14.602743	I-20 WB (Basic Analysis)	SW
6234	4	14.739034	I-20 WB (Basic Analysis)	SW
6234	5	13.974683	I-20 WB (Basic Analysis)	SW
6234	6	14.087088	I-20 WB (Basic Analysis)	SW
6234	7	15.185841	I-20 WB (Basic Analysis)	SW
6234	8	14.973678	I-20 WB (Basic Analysis)	SW
6234	9	14.977893	I-20 WB (Basic Analysis)	SW
6234	10	14.757299	I-20 WB (Basic Analysis)	SW
6238	1	90.252779	I-20 EB (Merge Analysis)	NE
6238	2	109.030019	I-20 EB (Merge Analysis)	NE
6238	3	100.319977	I-20 EB (Merge Analysis)	NE
6238	4	92.308068	I-20 EB (Merge Analysis)	NE
6238	5	103.390198	I-20 EB (Merge Analysis)	NE
6238	6	94.756423	I-20 EB (Merge Analysis)	NE
6238	7	98.8318	I-20 EB (Merge Analysis)	NE
6238	8	86.906824	I-20 EB (Merge Analysis)	NE
6238	9	85.590736	I-20 EB (Merge Analysis)	NE
6238	10	94.433757	I-20 EB (Merge Analysis)	NE
6241	1	106.495011	I-20 EB (Basic Analysis)	NE
6241	2	121.865619	I-20 EB (Basic Analysis)	NE
6241	3	114.797465	I-20 EB (Basic Analysis)	NE
6241	4	116.189336	I-20 EB (Basic Analysis)	NE
6241	5	126.318856	I-20 EB (Basic Analysis)	NE
6241	6	111.394697	I-20 EB (Basic Analysis)	NE
6241	7	118.691702	I-20 EB (Basic Analysis)	NE
6241	8	105.624622	I-20 EB (Basic Analysis)	NE
6241	9	102.199345	I-20 EB (Basic Analysis)	NE
6241	10	111.124577	I-20 EB (Basic Analysis)	NE
6242	1	90.871763	I-20 EB (Merge Analysis)	NE
6242	2	98.685477	I-20 EB (Merge Analysis)	NE
6242	3	92.755176	I-20 EB (Merge Analysis)	NE
6242	4	96.208102	I-20 EB (Merge Analysis)	NE
6242	5	97.64393	I-20 EB (Merge Analysis)	NE
6242	6	92.454812	I-20 EB (Merge Analysis)	NE
6242	7	93.569123	I-20 EB (Merge Analysis)	NE
6242	8	89.594155	I-20 EB (Merge Analysis)	NE
6242	9	90.45379	I-20 EB (Merge Analysis)	NE
6242	10	92.613878	I-20 EB (Merge Analysis)	NE
6246	1	32.465696	I-20 WB (Merge Analysis)	SW
6246	2	30.448027	I-20 WB (Merge Analysis)	SW
6246	3	34.370597	I-20 WB (Merge Analysis)	SW
6246	4	30.645877	I-20 WB (Merge Analysis)	SW
6246	5	31.732366	I-20 WB (Merge Analysis)	SW
6246	6	31.523712	I-20 WB (Merge Analysis)	SW
6246	7	32.747278	I-20 WB (Merge Analysis)	SW
6246	8	33.486685	I-20 WB (Merge Analysis)	SW

RPA AM

ID	Run	Density	Name (Type)	Direction
6246	9	33.436041	I-20 WB (Merge Analysis)	SW
6246	10	32.904613	I-20 WB (Merge Analysis)	SW
6247	1	32.465696	I-20 WB (Merge Analysis)	SW
6247	2	30.448027	I-20 WB (Merge Analysis)	SW
6247	3	34.370597	I-20 WB (Merge Analysis)	SW
6247	4	30.645877	I-20 WB (Merge Analysis)	SW
6247	5	31.732366	I-20 WB (Merge Analysis)	SW
6247	6	31.523712	I-20 WB (Merge Analysis)	SW
6247	7	32.747278	I-20 WB (Merge Analysis)	SW
6247	8	33.486685	I-20 WB (Merge Analysis)	SW
6247	9	33.436041	I-20 WB (Merge Analysis)	SW
6247	10	32.904613	I-20 WB (Merge Analysis)	SW
6249	1	36.867171	I-20 WB (Basic Analysis)	SW
6249	2	35.051371	I-20 WB (Basic Analysis)	SW
6249	3	38.062191	I-20 WB (Basic Analysis)	SW
6249	4	34.770279	I-20 WB (Basic Analysis)	SW
6249	5	35.004311	I-20 WB (Basic Analysis)	SW
6249	6	35.962388	I-20 WB (Basic Analysis)	SW
6249	7	36.876816	I-20 WB (Basic Analysis)	SW
6249	8	37.862518	I-20 WB (Basic Analysis)	SW
6249	9	38.162918	I-20 WB (Basic Analysis)	SW
6249	10	36.608717	I-20 WB (Basic Analysis)	SW
6251	1	36.733863	I-20 WB (Basic Analysis)	SW
6251	2	35.997621	I-20 WB (Basic Analysis)	SW
6251	3	40.244978	I-20 WB (Basic Analysis)	SW
6251	4	34.350079	I-20 WB (Basic Analysis)	SW
6251	5	35.4054	I-20 WB (Basic Analysis)	SW
6251	6	35.91692	I-20 WB (Basic Analysis)	SW
6251	7	36.961068	I-20 WB (Basic Analysis)	SW
6251	8	37.155991	I-20 WB (Basic Analysis)	SW
6251	9	38.443483	I-20 WB (Basic Analysis)	SW
6251	10	35.695924	I-20 WB (Basic Analysis)	SW
6254	1	35.688184	I-20 EB (Basic Analysis)	NE
6254	2	34.930141	I-20 EB (Basic Analysis)	NE
6254	3	34.940164	I-20 EB (Basic Analysis)	NE
6254	4	36.030244	I-20 EB (Basic Analysis)	NE
6254	5	35.280971	I-20 EB (Basic Analysis)	NE
6254	6	36.050291	I-20 EB (Basic Analysis)	NE
6254	7	35.933765	I-20 EB (Basic Analysis)	NE
6254	8	36.186864	I-20 EB (Basic Analysis)	NE
6254	9	36.387338	I-20 EB (Basic Analysis)	NE
6254	10	35.289742	I-20 EB (Basic Analysis)	NE
6258	1	33.678207	I-20 EB (Merge Analysis)	NE
6258	2	34.183533	I-20 EB (Merge Analysis)	NE
6258	3	34.16583	I-20 EB (Merge Analysis)	NE
6258	4	34.877149	I-20 EB (Merge Analysis)	NE
6258	5	32.342472	I-20 EB (Merge Analysis)	NE
6258	6	33.853623	I-20 EB (Merge Analysis)	NE
6258	7	34.299404	I-20 EB (Merge Analysis)	NE
6258	8	34.806339	I-20 EB (Merge Analysis)	NE
6258	9	35.234418	I-20 EB (Merge Analysis)	NE
6258	10	35.123375	I-20 EB (Merge Analysis)	NE
6259	1	33.678207	I-20 EB (Merge Analysis)	NE
6259	2	34.183533	I-20 EB (Merge Analysis)	NE
6259	3	34.16583	I-20 EB (Merge Analysis)	NE
6259	4	34.877149	I-20 EB (Merge Analysis)	NE
6259	5	32.342472	I-20 EB (Merge Analysis)	NE
6259	6	33.853623	I-20 EB (Merge Analysis)	NE
6259	7	34.299404	I-20 EB (Merge Analysis)	NE

RPA AM

ID	Run	Density	Name (Type)	Direction
6259	8	34.806339	I-20 EB (Merge Analysis)	NE
6259	9	35.234418	I-20 EB (Merge Analysis)	NE
6259	10	35.123375	I-20 EB (Merge Analysis)	NE
8539	1	15.97033	I-20 WB (Basic Analysis)	SW
8539	2	15.174863	I-20 WB (Basic Analysis)	SW
8539	3	15.627026	I-20 WB (Basic Analysis)	SW
8539	4	15.058248	I-20 WB (Basic Analysis)	SW
8539	5	15.36323	I-20 WB (Basic Analysis)	SW
8539	6	16.368238	I-20 WB (Basic Analysis)	SW
8539	7	15.056384	I-20 WB (Basic Analysis)	SW
8539	8	15.502303	I-20 WB (Basic Analysis)	SW
8539	9	15.273805	I-20 WB (Basic Analysis)	SW
8539	10	16.285397	I-20 WB (Basic Analysis)	SW
8542	1	31.130778	I-20 EB (Basic Analysis)	NE
8542	2	33.559032	I-20 EB (Basic Analysis)	NE
8542	3	30.760785	I-20 EB (Basic Analysis)	NE
8542	4	28.675294	I-20 EB (Basic Analysis)	NE
8542	5	31.156604	I-20 EB (Basic Analysis)	NE
8542	6	33.929025	I-20 EB (Basic Analysis)	NE
8542	7	31.77251	I-20 EB (Basic Analysis)	NE
8542	8	31.565056	I-20 EB (Basic Analysis)	NE
8542	9	29.561536	I-20 EB (Basic Analysis)	NE
8542	10	29.618242	I-20 EB (Basic Analysis)	NE
8554	1	16.636042	I-26 WB (Basic Analysis)	N
8554	2	17.282771	I-26 WB (Basic Analysis)	N
8554	3	16.665071	I-26 WB (Basic Analysis)	N
8554	4	17.160581	I-26 WB (Basic Analysis)	N
8554	5	17.305049	I-26 WB (Basic Analysis)	N
8554	6	16.803125	I-26 WB (Basic Analysis)	N
8554	7	17.020839	I-26 WB (Basic Analysis)	N
8554	8	16.642456	I-26 WB (Basic Analysis)	N
8554	9	17.291547	I-26 WB (Basic Analysis)	N
8554	10	17.362093	I-26 WB (Basic Analysis)	N
8559	1	15.530516	I-126 NB (Basic Analysis)	W
8559	2	14.892974	I-126 NB (Basic Analysis)	W
8559	3	14.06842	I-126 NB (Basic Analysis)	W
8559	4	13.588139	I-126 NB (Basic Analysis)	W
8559	5	15.564518	I-126 NB (Basic Analysis)	W
8559	6	14.710212	I-126 NB (Basic Analysis)	W
8559	7	14.391441	I-126 NB (Basic Analysis)	W
8559	8	13.945162	I-126 NB (Basic Analysis)	W
8559	9	15.526266	I-126 NB (Basic Analysis)	W
8559	10	13.75815	I-126 NB (Basic Analysis)	W
8560	1	53.390994	I-126 SB (Basic Analysis)	E
8560	2	52.647832	I-126 SB (Basic Analysis)	E
8560	3	48.568498	I-126 SB (Basic Analysis)	E
8560	4	51.526966	I-126 SB (Basic Analysis)	E
8560	5	47.839517	I-126 SB (Basic Analysis)	E
8560	6	48.373201	I-126 SB (Basic Analysis)	E
8560	7	48.202396	I-126 SB (Basic Analysis)	E
8560	8	46.843048	I-126 SB (Basic Analysis)	E
8560	9	50.017439	I-126 SB (Basic Analysis)	E
8560	10	50.134102	I-126 SB (Basic Analysis)	E
8658	1	32.465696	I-20 WB (Merge Analysis)	SW
8658	2	30.448027	I-20 WB (Merge Analysis)	SW
8658	3	34.370597	I-20 WB (Merge Analysis)	SW
8658	4	30.645877	I-20 WB (Merge Analysis)	SW

RPA AM

ID	Run	Density	Name (Type)	Direction
8658	5	31.732366	I-20 WB (Merge Analysis)	SW
8658	6	31.523712	I-20 WB (Merge Analysis)	SW
8658	7	32.747278	I-20 WB (Merge Analysis)	SW
8658	8	33.486685	I-20 WB (Merge Analysis)	SW
8658	9	33.436041	I-20 WB (Merge Analysis)	SW
8658	10	32.904613	I-20 WB (Merge Analysis)	SW
8659	1	56.628549	I-20 EB (Basic Analysis)	NE
8659	2	57.493605	I-20 EB (Basic Analysis)	NE
8659	3	56.630433	I-20 EB (Basic Analysis)	NE
8659	4	58.540352	I-20 EB (Basic Analysis)	NE
8659	5	58.210903	I-20 EB (Basic Analysis)	NE
8659	6	56.449472	I-20 EB (Basic Analysis)	NE
8659	7	56.53323	I-20 EB (Basic Analysis)	NE
8659	8	56.564499	I-20 EB (Basic Analysis)	NE
8659	9	56.99883	I-20 EB (Basic Analysis)	NE
8659	10	56.641015	I-20 EB (Basic Analysis)	NE
8763	1	28.042624	I-26 EB (Basic Analysis)	SE
8763	2	29.000495	I-26 EB (Basic Analysis)	SE
8763	3	28.376622	I-26 EB (Basic Analysis)	SE
8763	4	28.256211	I-26 EB (Basic Analysis)	SE
8763	5	28.517794	I-26 EB (Basic Analysis)	SE
8763	6	28.484506	I-26 EB (Basic Analysis)	SE
8763	7	28.48519	I-26 EB (Basic Analysis)	SE
8763	8	27.785845	I-26 EB (Basic Analysis)	SE
8763	9	28.264737	I-26 EB (Basic Analysis)	SE
8763	10	28.33844	I-26 EB (Basic Analysis)	SE
8764	1	15.51989	I-20 WB (Basic Analysis)	S
8764	2	14.826592	I-20 WB (Basic Analysis)	S
8764	3	15.303573	I-20 WB (Basic Analysis)	S
8764	4	15.040722	I-20 WB (Basic Analysis)	S
8764	5	15.065812	I-20 WB (Basic Analysis)	S
8764	6	15.527117	I-20 WB (Basic Analysis)	S
8764	7	15.996618	I-20 WB (Basic Analysis)	S
8764	8	15.376429	I-20 WB (Basic Analysis)	S
8764	9	15.29834	I-20 WB (Basic Analysis)	S
8764	10	16.144402	I-20 WB (Basic Analysis)	S
8765	1	37.671435	I-20 EB (Basic Analysis)	NE
8765	2	42.555665	I-20 EB (Basic Analysis)	NE
8765	3	37.582901	I-20 EB (Basic Analysis)	NE
8765	4	37.923211	I-20 EB (Basic Analysis)	NE
8765	5	40.717901	I-20 EB (Basic Analysis)	NE
8765	6	37.740555	I-20 EB (Basic Analysis)	NE
8765	7	40.669128	I-20 EB (Basic Analysis)	NE
8765	8	38.393887	I-20 EB (Basic Analysis)	NE
8765	9	36.496668	I-20 EB (Basic Analysis)	NE
8765	10	38.355338	I-20 EB (Basic Analysis)	NE
8770	1	38.491465	I-20 WB (Basic Analysis)	SW
8770	2	39.361001	I-20 WB (Basic Analysis)	SW
8770	3	38.575391	I-20 WB (Basic Analysis)	SW
8770	4	36.735954	I-20 WB (Basic Analysis)	SW
8770	5	38.076597	I-20 WB (Basic Analysis)	SW
8770	6	37.891875	I-20 WB (Basic Analysis)	SW
8770	7	38.369471	I-20 WB (Basic Analysis)	SW
8770	8	39.279239	I-20 WB (Basic Analysis)	SW
8770	9	39.046065	I-20 WB (Basic Analysis)	SW
8770	10	39.198775	I-20 WB (Basic Analysis)	SW
8773	1	44.981454	I-26 WB (Basic Analysis)	N

RPA AM

ID	Run	Density	Name (Type)	Direction
8773	2	33.27755	I-26 WB (Basic Analysis)	N
8773	3	27.148842	I-26 WB (Basic Analysis)	N
8773	4	34.862408	I-26 WB (Basic Analysis)	N
8773	5	28.230641	I-26 WB (Basic Analysis)	N
8773	6	32.370858	I-26 WB (Basic Analysis)	N
8773	7	27.775069	I-26 WB (Basic Analysis)	N
8773	8	42.365253	I-26 WB (Basic Analysis)	N
8773	9	45.646263	I-26 WB (Basic Analysis)	N
8773	10	29.040877	I-26 WB (Basic Analysis)	N
8774	1	45.030082	I-20 EB (Diverge Analysis)	NE
8774	2	45.320744	I-20 EB (Diverge Analysis)	NE
8774	3	44.314609	I-20 EB (Diverge Analysis)	NE
8774	4	44.549374	I-20 EB (Diverge Analysis)	NE
8774	5	46.846713	I-20 EB (Diverge Analysis)	NE
8774	6	45.636558	I-20 EB (Diverge Analysis)	NE
8774	7	44.037923	I-20 EB (Diverge Analysis)	NE
8774	8	44.149715	I-20 EB (Diverge Analysis)	NE
8774	9	43.909361	I-20 EB (Diverge Analysis)	NE
8774	10	45.544329	I-20 EB (Diverge Analysis)	NE
8784	1	28.249856	I-126 SB (Basic Analysis)	SE
8784	2	28.888759	I-126 SB (Basic Analysis)	SE
8784	3	28.4227	I-126 SB (Basic Analysis)	SE
8784	4	28.728262	I-126 SB (Basic Analysis)	SE
8784	5	28.328562	I-126 SB (Basic Analysis)	SE
8784	6	27.104769	I-126 SB (Basic Analysis)	SE
8784	7	28.169608	I-126 SB (Basic Analysis)	SE
8784	8	28.753725	I-126 SB (Basic Analysis)	SE
8784	9	27.495982	I-126 SB (Basic Analysis)	SE
8784	10	28.256029	I-126 SB (Basic Analysis)	SE
8789	1	21.325831	I-26 EB (Basic Analysis)	S
8789	2	22.019893	I-26 EB (Basic Analysis)	S
8789	3	21.087383	I-26 EB (Basic Analysis)	S
8789	4	22.195947	I-26 EB (Basic Analysis)	S
8789	5	21.191372	I-26 EB (Basic Analysis)	S
8789	6	21.587978	I-26 EB (Basic Analysis)	S
8789	7	21.424983	I-26 EB (Basic Analysis)	S
8789	8	21.60007	I-26 EB (Basic Analysis)	S
8789	9	20.917133	I-26 EB (Basic Analysis)	S
8789	10	21.400316	I-26 EB (Basic Analysis)	S
8790	1	25.882748	CD ROAD I-26 WB TO I-20 (Basic Analysis)	NE
8790	2	30.380723	CD ROAD I-26 WB TO I-20 (Basic Analysis)	NE
8790	3	26.48377	CD ROAD I-26 WB TO I-20 (Basic Analysis)	NE
8790	4	30.0996	CD ROAD I-26 WB TO I-20 (Basic Analysis)	NE
8790	5	28.71337	CD ROAD I-26 WB TO I-20 (Basic Analysis)	NE
8790	6	27.42408	CD ROAD I-26 WB TO I-20 (Basic Analysis)	NE
8790	7	27.59857	CD ROAD I-26 WB TO I-20 (Basic Analysis)	NE
8790	8	26.183259	CD ROAD I-26 WB TO I-20 (Basic Analysis)	NE
8790	9	25.46591	CD ROAD I-26 WB TO I-20 (Basic Analysis)	NE
8790	10	26.697037	CD ROAD I-26 WB TO I-20 (Basic Analysis)	NE
8791	1	11.618618	CD ROAD I-20 WB TO I-20 (Basic Analysis)	NE
8791	2	11.879385	CD ROAD I-20 WB TO I-20 (Basic Analysis)	NE
8791	3	12.625468	CD ROAD I-20 WB TO I-20 (Basic Analysis)	NE
8791	4	10.691446	CD ROAD I-20 WB TO I-20 (Basic Analysis)	NE
8791	5	12.668929	CD ROAD I-20 WB TO I-20 (Basic Analysis)	NE
8791	6	10.264078	CD ROAD I-20 WB TO I-20 (Basic Analysis)	NE
8791	7	11.33612	CD ROAD I-20 WB TO I-20 (Basic Analysis)	NE
8791	8	11.155032	CD ROAD I-20 WB TO I-20 (Basic Analysis)	NE

RPA AM

ID	Run	Density	Name (Type)	Direction
8791	9	10.778368	CD ROAD I-20 WB TO I-20 (Basic Analysis)	NE
8791	10	12.09669	CD ROAD I-20 WB TO I-20 (Basic Analysis)	NE
8792	1	17.443336	I-26 EB (Basic Analysis)	S
8792	2	17.28203	I-26 EB (Basic Analysis)	S
8792	3	16.932525	I-26 EB (Basic Analysis)	S
8792	4	17.901837	I-26 EB (Basic Analysis)	S
8792	5	17.098118	I-26 EB (Basic Analysis)	S
8792	6	17.55076	I-26 EB (Basic Analysis)	S
8792	7	17.090004	I-26 EB (Basic Analysis)	S
8792	8	17.336907	I-26 EB (Basic Analysis)	S
8792	9	16.242395	I-26 EB (Basic Analysis)	S
8792	10	16.808694	I-26 EB (Basic Analysis)	S
8802	1	28.960967	CD ROAD I-20 EB (Basic Analysis)	NE
8802	2	28.312401	CD ROAD I-20 EB (Basic Analysis)	NE
8802	3	27.85404	CD ROAD I-20 EB (Basic Analysis)	NE
8802	4	28.390354	CD ROAD I-20 EB (Basic Analysis)	NE
8802	5	28.826889	CD ROAD I-20 EB (Basic Analysis)	NE
8802	6	28.833125	CD ROAD I-20 EB (Basic Analysis)	NE
8802	7	28.589913	CD ROAD I-20 EB (Basic Analysis)	NE
8802	8	29.013975	CD ROAD I-20 EB (Basic Analysis)	NE
8802	9	27.654481	CD ROAD I-20 EB (Basic Analysis)	NE
8802	10	27.386324	CD ROAD I-20 EB (Basic Analysis)	NE
8819	1	11.425469	CD ROAD I-20 WB (Weaving Analysis)	SW
8819	2	11.268894	CD ROAD I-20 WB (Weaving Analysis)	SW
8819	3	11.339654	CD ROAD I-20 WB (Weaving Analysis)	SW
8819	4	10.665177	CD ROAD I-20 WB (Weaving Analysis)	SW
8819	5	11.286961	CD ROAD I-20 WB (Weaving Analysis)	SW
8819	6	11.792819	CD ROAD I-20 WB (Weaving Analysis)	SW
8819	7	11.279433	CD ROAD I-20 WB (Weaving Analysis)	SW
8819	8	10.931655	CD ROAD I-20 WB (Weaving Analysis)	SW
8819	9	10.60345	CD ROAD I-20 WB (Weaving Analysis)	SW
8819	10	12.026176	CD ROAD I-20 WB (Weaving Analysis)	SW
8826	1	16.822925	CD ROAD I-20 EB (Basic Analysis)	E
8826	2	16.939536	CD ROAD I-20 EB (Basic Analysis)	E
8826	3	16.463573	CD ROAD I-20 EB (Basic Analysis)	E
8826	4	16.311264	CD ROAD I-20 EB (Basic Analysis)	E
8826	5	17.006171	CD ROAD I-20 EB (Basic Analysis)	E
8826	6	16.256529	CD ROAD I-20 EB (Basic Analysis)	E
8826	7	15.918595	CD ROAD I-20 EB (Basic Analysis)	E
8826	8	18.598269	CD ROAD I-20 EB (Basic Analysis)	E
8826	9	16.518309	CD ROAD I-20 EB (Basic Analysis)	E
8826	10	17.872424	CD ROAD I-20 EB (Basic Analysis)	E
8828	1	20.214473	(Weaving Analysis)	NW
8828	2	18.650895	(Weaving Analysis)	NW
8828	3	18.495374	(Weaving Analysis)	NW
8828	4	18.446878	(Weaving Analysis)	NW
8828	5	17.803051	(Weaving Analysis)	NW
8828	6	18.856585	(Weaving Analysis)	NW
8828	7	18.717786	(Weaving Analysis)	NW
8828	8	20.304776	(Weaving Analysis)	NW
8828	9	19.376663	(Weaving Analysis)	NW
8828	10	18.568954	(Weaving Analysis)	NW
8829	1	38.78584	CD ROAD I-20 EB (Basic Analysis)	E
8829	2	77.905159	CD ROAD I-20 EB (Basic Analysis)	E
8829	3	63.753787	CD ROAD I-20 EB (Basic Analysis)	E
8829	4	62.718387	CD ROAD I-20 EB (Basic Analysis)	E
8829	5	66.40011	CD ROAD I-20 EB (Basic Analysis)	E

RPA AM

ID	Run	Density	Name (Type)	Direction
8829	6	64.705818	CD ROAD I-20 EB (Basic Analysis)	E
8829	7	70.565917	CD ROAD I-20 EB (Basic Analysis)	E
8829	8	44.584084	CD ROAD I-20 EB (Basic Analysis)	E
8829	9	36.136828	CD ROAD I-20 EB (Basic Analysis)	E
8829	10	66.322119	CD ROAD I-20 EB (Basic Analysis)	E
8830	1	27.853338	CD ROAD I-26 EB (Weaving Analysis)	SE
8830	2	50.341885	CD ROAD I-26 EB (Weaving Analysis)	SE
8830	3	28.585925	CD ROAD I-26 EB (Weaving Analysis)	SE
8830	4	26.771363	CD ROAD I-26 EB (Weaving Analysis)	SE
8830	5	28.116318	CD ROAD I-26 EB (Weaving Analysis)	SE
8830	6	29.397406	CD ROAD I-26 EB (Weaving Analysis)	SE
8830	7	29.01045	CD ROAD I-26 EB (Weaving Analysis)	SE
8830	8	26.196564	CD ROAD I-26 EB (Weaving Analysis)	SE
8830	9	28.037424	CD ROAD I-26 EB (Weaving Analysis)	SE
8830	10	31.910744	CD ROAD I-26 EB (Weaving Analysis)	SE
8831	1	34.125173	I-20 WB (Diverge Analysis)	SW
8831	2	32.501259	I-20 WB (Diverge Analysis)	SW
8831	3	36.651857	I-20 WB (Diverge Analysis)	SW
8831	4	32.003127	I-20 WB (Diverge Analysis)	SW
8831	5	33.466086	I-20 WB (Diverge Analysis)	SW
8831	6	33.243861	I-20 WB (Diverge Analysis)	SW
8831	7	33.950829	I-20 WB (Diverge Analysis)	SW
8831	8	34.876204	I-20 WB (Diverge Analysis)	SW
8831	9	35.490057	I-20 WB (Diverge Analysis)	SW
8831	10	34.184949	I-20 WB (Diverge Analysis)	SW
8832	1	34.125173	I-20 WB (Diverge Analysis)	SW
8832	2	32.501259	I-20 WB (Diverge Analysis)	SW
8832	3	36.651857	I-20 WB (Diverge Analysis)	SW
8832	4	32.003127	I-20 WB (Diverge Analysis)	SW
8832	5	33.466086	I-20 WB (Diverge Analysis)	SW
8832	6	33.243861	I-20 WB (Diverge Analysis)	SW
8832	7	33.950829	I-20 WB (Diverge Analysis)	SW
8832	8	34.876204	I-20 WB (Diverge Analysis)	SW
8832	9	35.490057	I-20 WB (Diverge Analysis)	SW
8832	10	34.184949	I-20 WB (Diverge Analysis)	SW
8837	1	11.575568	I-20 WB (Basic Analysis)	W
8837	2	10.951307	I-20 WB (Basic Analysis)	W
8837	3	10.633938	I-20 WB (Basic Analysis)	W
8837	4	10.944095	I-20 WB (Basic Analysis)	W
8837	5	9.594311	I-20 WB (Basic Analysis)	W
8837	6	10.519112	I-20 WB (Basic Analysis)	W
8837	7	11.995802	I-20 WB (Basic Analysis)	W
8837	8	11.23369	I-20 WB (Basic Analysis)	W
8837	9	11.598612	I-20 WB (Basic Analysis)	W
8837	10	12.077895	I-20 WB (Basic Analysis)	W
8838	1	9.166049	I-20 WB (Basic Analysis)	SW
8838	2	9.717536	I-20 WB (Basic Analysis)	SW
8838	3	9.546412	I-20 WB (Basic Analysis)	SW
8838	4	9.008147	I-20 WB (Basic Analysis)	SW
8838	5	9.033816	I-20 WB (Basic Analysis)	SW
8838	6	9.405623	I-20 WB (Basic Analysis)	SW
8838	7	9.400956	I-20 WB (Basic Analysis)	SW
8838	8	9.38851	I-20 WB (Basic Analysis)	SW
8838	9	9.331728	I-20 WB (Basic Analysis)	SW
8838	10	9.747094	I-20 WB (Basic Analysis)	SW
8839	1	56.628549	I-20 EB (Basic Analysis)	NE
8839	2	57.493605	I-20 EB (Basic Analysis)	NE

RPA AM

ID	Run	Density	Name (Type)	Direction
8839	3	56.630433	I-20 EB (Basic Analysis)	NE
8839	4	58.540352	I-20 EB (Basic Analysis)	NE
8839	5	58.210903	I-20 EB (Basic Analysis)	NE
8839	6	56.449472	I-20 EB (Basic Analysis)	NE
8839	7	56.53323	I-20 EB (Basic Analysis)	NE
8839	8	56.564499	I-20 EB (Basic Analysis)	NE
8839	9	56.99883	I-20 EB (Basic Analysis)	NE
8839	10	56.641015	I-20 EB (Basic Analysis)	NE
8845	1	7.965131	I-20 WB (Merge Analysis)	W
8845	2	7.738723	I-20 WB (Merge Analysis)	W
8845	3	7.926476	I-20 WB (Merge Analysis)	W
8845	4	7.997159	I-20 WB (Merge Analysis)	W
8845	5	7.567537	I-20 WB (Merge Analysis)	W
8845	6	7.998264	I-20 WB (Merge Analysis)	W
8845	7	8.987831	I-20 WB (Merge Analysis)	W
8845	8	8.146257	I-20 WB (Merge Analysis)	W
8845	9	7.865732	I-20 WB (Merge Analysis)	W
8845	10	7.722157	I-20 WB (Merge Analysis)	W
8849	1	21.009314	CD ROAD I-20 WB (Weaving Analysis)	W
8849	2	20.155355	CD ROAD I-20 WB (Weaving Analysis)	W
8849	3	20.751363	CD ROAD I-20 WB (Weaving Analysis)	W
8849	4	20.405294	CD ROAD I-20 WB (Weaving Analysis)	W
8849	5	20.754568	CD ROAD I-20 WB (Weaving Analysis)	W
8849	6	20.942022	CD ROAD I-20 WB (Weaving Analysis)	W
8849	7	21.046164	CD ROAD I-20 WB (Weaving Analysis)	W
8849	8	21.467536	CD ROAD I-20 WB (Weaving Analysis)	W
8849	9	20.735342	CD ROAD I-20 WB (Weaving Analysis)	W
8849	10	19.790059	CD ROAD I-20 WB (Weaving Analysis)	W
8852	1	22.353691	(Basic Analysis)	E
8852	2	22.423743	(Basic Analysis)	E
8852	3	21.558597	(Basic Analysis)	E
8852	4	21.884341	(Basic Analysis)	E
8852	5	20.493802	(Basic Analysis)	E
8852	6	21.075236	(Basic Analysis)	E
8852	7	22.00343	(Basic Analysis)	E
8852	8	21.824796	(Basic Analysis)	E
8852	9	21.309912	(Basic Analysis)	E
8852	10	21.845812	(Basic Analysis)	E
8853	1	30.290505	CD ROAD I-20 EB (Basic Analysis)	E
8853	2	30.825613	CD ROAD I-20 EB (Basic Analysis)	E
8853	3	28.476614	CD ROAD I-20 EB (Basic Analysis)	E
8853	4	29.237142	CD ROAD I-20 EB (Basic Analysis)	E
8853	5	28.225914	CD ROAD I-20 EB (Basic Analysis)	E
8853	6	29.557364	CD ROAD I-20 EB (Basic Analysis)	E
8853	7	28.632512	CD ROAD I-20 EB (Basic Analysis)	E
8853	8	28.034202	CD ROAD I-20 EB (Basic Analysis)	E
8853	9	28.887426	CD ROAD I-20 EB (Basic Analysis)	E
8853	10	29.6311	CD ROAD I-20 EB (Basic Analysis)	E
8855	1	11.409735	CD ROAD I-20 WB TO I-20 (Basic Analysis)	NW
8855	2	10.902528	CD ROAD I-20 WB TO I-20 (Basic Analysis)	NW
8855	3	12.095672	CD ROAD I-20 WB TO I-20 (Basic Analysis)	NW
8855	4	11.536939	CD ROAD I-20 WB TO I-20 (Basic Analysis)	NW
8855	5	10.991088	CD ROAD I-20 WB TO I-20 (Basic Analysis)	NW
8855	6	10.574052	CD ROAD I-20 WB TO I-20 (Basic Analysis)	NW
8855	7	10.689985	CD ROAD I-20 WB TO I-20 (Basic Analysis)	NW
8855	8	11.264819	CD ROAD I-20 WB TO I-20 (Basic Analysis)	NW
8855	9	11.179479	CD ROAD I-20 WB TO I-20 (Basic Analysis)	NW

RPA AM

ID	Run	Density	Name (Type)	Direction
8855	10	11.173039	CD ROAD I-20 WB TO I-20 (Basic Analysis)	NW
8863	1	35.020623	(Basic Analysis)	SE
8863	2	33.603972	(Basic Analysis)	SE
8863	3	34.15787	(Basic Analysis)	SE
8863	4	34.868748	(Basic Analysis)	SE
8863	5	33.473794	(Basic Analysis)	SE
8863	6	33.649917	(Basic Analysis)	SE
8863	7	33.646089	(Basic Analysis)	SE
8863	8	33.828594	(Basic Analysis)	SE
8863	9	34.238274	(Basic Analysis)	SE
8863	10	33.597591	(Basic Analysis)	SE
8869	1	26.446216	(Weaving Analysis)	SE
8869	2	26.304561	(Weaving Analysis)	SE
8869	3	26.220529	(Weaving Analysis)	SE
8869	4	25.639504	(Weaving Analysis)	SE
8869	5	26.218128	(Weaving Analysis)	SE
8869	6	25.457034	(Weaving Analysis)	SE
8869	7	26.782346	(Weaving Analysis)	SE
8869	8	26.04286	(Weaving Analysis)	SE
8869	9	26.021252	(Weaving Analysis)	SE
8869	10	26.314165	(Weaving Analysis)	SE
8871	1	17.480042	(Basic Analysis)	W
8871	2	17.829888	(Basic Analysis)	W
8871	3	16.722042	(Basic Analysis)	W
8871	4	13.766761	(Basic Analysis)	W
8871	5	14.742648	(Basic Analysis)	W
8871	6	14.785612	(Basic Analysis)	W
8871	7	15.562025	(Basic Analysis)	W
8871	8	16.154309	(Basic Analysis)	W
8871	9	15.635677	(Basic Analysis)	W
8871	10	15.41779	(Basic Analysis)	W
8877	1	7.81117	I-20 WB (Diverge Analysis)	W
8877	2	7.620283	I-20 WB (Diverge Analysis)	W
8877	3	7.910647	I-20 WB (Diverge Analysis)	W
8877	4	7.937578	I-20 WB (Diverge Analysis)	W
8877	5	7.569211	I-20 WB (Diverge Analysis)	W
8877	6	8.194058	I-20 WB (Diverge Analysis)	W
8877	7	8.933693	I-20 WB (Diverge Analysis)	W
8877	8	7.946949	I-20 WB (Diverge Analysis)	W
8877	9	8.068365	I-20 WB (Diverge Analysis)	W
8877	10	7.674505	I-20 WB (Diverge Analysis)	W
8878	1	11.575568	I-20 WB (Basic Analysis)	W
8878	2	10.951307	I-20 WB (Basic Analysis)	W
8878	3	10.633938	I-20 WB (Basic Analysis)	W
8878	4	10.944095	I-20 WB (Basic Analysis)	W
8878	5	9.594311	I-20 WB (Basic Analysis)	W
8878	6	10.519112	I-20 WB (Basic Analysis)	W
8878	7	11.995802	I-20 WB (Basic Analysis)	W
8878	8	11.23369	I-20 WB (Basic Analysis)	W
8878	9	11.598612	I-20 WB (Basic Analysis)	W
8878	10	12.077895	I-20 WB (Basic Analysis)	W
8883	1	35.07253	I-26 WB (Basic Analysis)	NW
8883	2	33.897541	I-26 WB (Basic Analysis)	NW
8883	3	36.379589	I-26 WB (Basic Analysis)	NW
8883	4	35.509392	I-26 WB (Basic Analysis)	NW
8883	5	30.45493	I-26 WB (Basic Analysis)	NW
8883	6	37.360375	I-26 WB (Basic Analysis)	NW

RPA AM

ID	Run	Density	Name (Type)	Direction
8883	7	36.733467	I-26 WB (Basic Analysis)	NW
8883	8	35.760714	I-26 WB (Basic Analysis)	NW
8883	9	37.768851	I-26 WB (Basic Analysis)	NW
8883	10	35.783178	I-26 WB (Basic Analysis)	NW
8886	1	28.293626	I-26 WB (Basic Analysis)	NW
8886	2	27.787719	I-26 WB (Basic Analysis)	NW
8886	3	27.835412	I-26 WB (Basic Analysis)	NW
8886	4	26.653659	I-26 WB (Basic Analysis)	NW
8886	5	27.683122	I-26 WB (Basic Analysis)	NW
8886	6	27.287443	I-26 WB (Basic Analysis)	NW
8886	7	26.633129	I-26 WB (Basic Analysis)	NW
8886	8	27.417191	I-26 WB (Basic Analysis)	NW
8886	9	27.412658	I-26 WB (Basic Analysis)	NW
8886	10	27.653471	I-26 WB (Basic Analysis)	NW
8887	1	28.000625	I-26 WB (Merge Analysis)	NW
8887	2	28.264606	I-26 WB (Merge Analysis)	NW
8887	3	28.393508	I-26 WB (Merge Analysis)	NW
8887	4	26.774301	I-26 WB (Merge Analysis)	NW
8887	5	27.504445	I-26 WB (Merge Analysis)	NW
8887	6	27.557417	I-26 WB (Merge Analysis)	NW
8887	7	27.756066	I-26 WB (Merge Analysis)	NW
8887	8	28.424408	I-26 WB (Merge Analysis)	NW
8887	9	28.314931	I-26 WB (Merge Analysis)	NW
8887	10	27.666895	I-26 WB (Merge Analysis)	NW
8910	1	74.424249	I-26 EB (Basic Analysis)	SE
8910	2	74.358389	I-26 EB (Basic Analysis)	SE
8910	3	77.546944	I-26 EB (Basic Analysis)	SE
8910	4	71.330467	I-26 EB (Basic Analysis)	SE
8910	5	68.556344	I-26 EB (Basic Analysis)	SE
8910	6	77.80235	I-26 EB (Basic Analysis)	SE
8910	7	69.208511	I-26 EB (Basic Analysis)	SE
8910	8	68.453538	I-26 EB (Basic Analysis)	SE
8910	9	66.003893	I-26 EB (Basic Analysis)	SE
8910	10	71.099156	I-26 EB (Basic Analysis)	SE
8915	1	28.003625	I-26 EB (Basic Analysis)	SE
8915	2	28.760074	I-26 EB (Basic Analysis)	SE
8915	3	28.503803	I-26 EB (Basic Analysis)	SE
8915	4	27.821059	I-26 EB (Basic Analysis)	SE
8915	5	27.457867	I-26 EB (Basic Analysis)	SE
8915	6	29.283284	I-26 EB (Basic Analysis)	SE
8915	7	27.112131	I-26 EB (Basic Analysis)	SE
8915	8	26.762031	I-26 EB (Basic Analysis)	SE
8915	9	27.439926	I-26 EB (Basic Analysis)	SE
8915	10	27.897432	I-26 EB (Basic Analysis)	SE
8940	1	41.947796	I-26 EB (Basic Analysis)	SE
8940	2	40.090777	I-26 EB (Basic Analysis)	SE
8940	3	43.179054	I-26 EB (Basic Analysis)	SE
8940	4	41.215348	I-26 EB (Basic Analysis)	SE
8940	5	39.90211	I-26 EB (Basic Analysis)	SE
8940	6	40.863382	I-26 EB (Basic Analysis)	SE
8940	7	42.631172	I-26 EB (Basic Analysis)	SE
8940	8	37.140236	I-26 EB (Basic Analysis)	SE
8940	9	42.544421	I-26 EB (Basic Analysis)	SE
8940	10	39.706194	I-26 EB (Basic Analysis)	SE
8955	1	102.945406	I-20 EB (Basic Analysis)	NE
8955	2	115.267583	I-20 EB (Basic Analysis)	NE
8955	3	112.146002	I-20 EB (Basic Analysis)	NE

RPA AM

ID	Run	Density	Name (Type)	Direction
8955	4	107.599956	I-20 EB (Basic Analysis)	NE
8955	5	117.407063	I-20 EB (Basic Analysis)	NE
8955	6	101.601623	I-20 EB (Basic Analysis)	NE
8955	7	113.052986	I-20 EB (Basic Analysis)	NE
8955	8	97.439516	I-20 EB (Basic Analysis)	NE
8955	9	95.542084	I-20 EB (Basic Analysis)	NE
8955	10	105.043153	I-20 EB (Basic Analysis)	NE
8959	1	15.97033	I-20 WB (Basic Analysis)	SW
8959	2	15.174863	I-20 WB (Basic Analysis)	SW
8959	3	15.627026	I-20 WB (Basic Analysis)	SW
8959	4	15.058248	I-20 WB (Basic Analysis)	SW
8959	5	15.36323	I-20 WB (Basic Analysis)	SW
8959	6	16.368238	I-20 WB (Basic Analysis)	SW
8959	7	15.056384	I-20 WB (Basic Analysis)	SW
8959	8	15.502303	I-20 WB (Basic Analysis)	SW
8959	9	15.273805	I-20 WB (Basic Analysis)	SW
8959	10	16.285397	I-20 WB (Basic Analysis)	SW
8975	1	35.861184	I-26 EB (Weaving Analysis)	SE
8975	2	35.067941	I-26 EB (Weaving Analysis)	SE
8975	3	35.375467	I-26 EB (Weaving Analysis)	SE
8975	4	36.960515	I-26 EB (Weaving Analysis)	SE
8975	5	34.984594	I-26 EB (Weaving Analysis)	SE
8975	6	36.934649	I-26 EB (Weaving Analysis)	SE
8975	7	35.588148	I-26 EB (Weaving Analysis)	SE
8975	8	33.704196	I-26 EB (Weaving Analysis)	SE
8975	9	36.492042	I-26 EB (Weaving Analysis)	SE
8975	10	35.899984	I-26 EB (Weaving Analysis)	SE
8986	1	73.182952	I-26 EB (Basic Analysis)	SE
8986	2	74.398582	I-26 EB (Basic Analysis)	SE
8986	3	74.919042	I-26 EB (Basic Analysis)	SE
8986	4	74.858113	I-26 EB (Basic Analysis)	SE
8986	5	71.323538	I-26 EB (Basic Analysis)	SE
8986	6	74.28113	I-26 EB (Basic Analysis)	SE
8986	7	72.113404	I-26 EB (Basic Analysis)	SE
8986	8	72.178737	I-26 EB (Basic Analysis)	SE
8986	9	71.224438	I-26 EB (Basic Analysis)	SE
8986	10	71.269951	I-26 EB (Basic Analysis)	SE
8994	1	32.160905	I-126 SB (Basic Analysis)	SE
8994	2	30.433887	I-126 SB (Basic Analysis)	SE
8994	3	31.239829	I-126 SB (Basic Analysis)	SE
8994	4	31.217442	I-126 SB (Basic Analysis)	SE
8994	5	30.142853	I-126 SB (Basic Analysis)	SE
8994	6	31.374152	I-126 SB (Basic Analysis)	SE
8994	7	30.724922	I-126 SB (Basic Analysis)	SE
8994	8	30.190826	I-126 SB (Basic Analysis)	SE
8994	9	30.533031	I-126 SB (Basic Analysis)	SE
8994	10	29.832629	I-126 SB (Basic Analysis)	SE
8996	1	11.618618	CD ROAD I-20 WB TO I-20 (Basic Analysis)	NE
8996	2	11.879385	CD ROAD I-20 WB TO I-20 (Basic Analysis)	NE
8996	3	12.625468	CD ROAD I-20 WB TO I-20 (Basic Analysis)	NE
8996	4	10.691446	CD ROAD I-20 WB TO I-20 (Basic Analysis)	NE
8996	5	12.668929	CD ROAD I-20 WB TO I-20 (Basic Analysis)	NE
8996	6	10.264078	CD ROAD I-20 WB TO I-20 (Basic Analysis)	NE
8996	7	11.33612	CD ROAD I-20 WB TO I-20 (Basic Analysis)	NE
8996	8	11.155032	CD ROAD I-20 WB TO I-20 (Basic Analysis)	NE
8996	9	10.778368	CD ROAD I-20 WB TO I-20 (Basic Analysis)	NE
8996	10	12.09669	CD ROAD I-20 WB TO I-20 (Basic Analysis)	NE

RPA AM

ID	Run	Density	Name (Type)	Direction
9001	1	6.364619	I-126 NB (Merge Analysis)	NW
9001	2	6.671309	I-126 NB (Merge Analysis)	NW
9001	3	6.740868	I-126 NB (Merge Analysis)	NW
9001	4	5.997855	I-126 NB (Merge Analysis)	NW
9001	5	5.220062	I-126 NB (Merge Analysis)	NW
9001	6	6.744029	I-126 NB (Merge Analysis)	NW
9001	7	6.791456	I-126 NB (Merge Analysis)	NW
9001	8	5.561532	I-126 NB (Merge Analysis)	NW
9001	9	6.054766	I-126 NB (Merge Analysis)	NW
9001	10	5.729105	I-126 NB (Merge Analysis)	NW
9005	1	11.983149	I-126 NB (Basic Analysis)	NW
9005	2	11.962613	I-126 NB (Basic Analysis)	NW
9005	3	12.113215	I-126 NB (Basic Analysis)	NW
9005	4	11.07269	I-126 NB (Basic Analysis)	NW
9005	5	11.425236	I-126 NB (Basic Analysis)	NW
9005	6	10.223841	I-126 NB (Basic Analysis)	NW
9005	7	11.480001	I-126 NB (Basic Analysis)	NW
9005	8	11.260943	I-126 NB (Basic Analysis)	NW
9005	9	12.08241	I-126 NB (Basic Analysis)	NW
9005	10	12.410997	I-126 NB (Basic Analysis)	NW
9012	1	33.963609	I-126 SB (Merge Analysis)	E
9012	2	37.422434	I-126 SB (Merge Analysis)	E
9012	3	32.823264	I-126 SB (Merge Analysis)	E
9012	4	33.968055	I-126 SB (Merge Analysis)	E
9012	5	31.480636	I-126 SB (Merge Analysis)	E
9012	6	31.158316	I-126 SB (Merge Analysis)	E
9012	7	33.589052	I-126 SB (Merge Analysis)	E
9012	8	32.585415	I-126 SB (Merge Analysis)	E
9012	9	33.422335	I-126 SB (Merge Analysis)	E
9012	10	31.412838	I-126 SB (Merge Analysis)	E
9017	1	40.705605	I-126 SB (Basic Analysis)	E
9017	2	40.420623	I-126 SB (Basic Analysis)	E
9017	3	37.564961	I-126 SB (Basic Analysis)	E
9017	4	42.146589	I-126 SB (Basic Analysis)	E
9017	5	37.129451	I-126 SB (Basic Analysis)	E
9017	6	36.746552	I-126 SB (Basic Analysis)	E
9017	7	39.722053	I-126 SB (Basic Analysis)	E
9017	8	37.744719	I-126 SB (Basic Analysis)	E
9017	9	39.030789	I-126 SB (Basic Analysis)	E
9017	10	37.154295	I-126 SB (Basic Analysis)	E
9018	1	40.705605	I-126 SB (Basic Analysis)	E
9018	2	40.420623	I-126 SB (Basic Analysis)	E
9018	3	37.564961	I-126 SB (Basic Analysis)	E
9018	4	42.146589	I-126 SB (Basic Analysis)	E
9018	5	37.129451	I-126 SB (Basic Analysis)	E
9018	6	36.746552	I-126 SB (Basic Analysis)	E
9018	7	39.722053	I-126 SB (Basic Analysis)	E
9018	8	37.744719	I-126 SB (Basic Analysis)	E
9018	9	39.030789	I-126 SB (Basic Analysis)	E
9018	10	37.154295	I-126 SB (Basic Analysis)	E
9019	1	10.279993	I-126 NB (Diverge Analysis)	NW
9019	2	9.999744	I-126 NB (Diverge Analysis)	NW
9019	3	10.509974	I-126 NB (Diverge Analysis)	NW
9019	4	9.98592	I-126 NB (Diverge Analysis)	NW
9019	5	9.890409	I-126 NB (Diverge Analysis)	NW
9019	6	10.542648	I-126 NB (Diverge Analysis)	NW
9019	7	9.75217	I-126 NB (Diverge Analysis)	NW

RPA AM

ID	Run	Density	Name (Type)	Direction
9019	8	10.556472	I-126 NB (Diverge Analysis)	NW
9019	9	9.587539	I-126 NB (Diverge Analysis)	NW
9019	10	9.936908	I-126 NB (Diverge Analysis)	NW
9022	1	4.793579	107 (Basic Analysis)	NW
9022	2	4.670989	107 (Basic Analysis)	NW
9022	3	5.321658	107 (Basic Analysis)	NW
9022	4	4.435239	107 (Basic Analysis)	NW
9022	5	4.328366	107 (Basic Analysis)	NW
9022	6	6.412394	107 (Basic Analysis)	NW
9022	7	4.913025	107 (Basic Analysis)	NW
9022	8	5.780584	107 (Basic Analysis)	NW
9022	9	4.941315	107 (Basic Analysis)	NW
9022	10	5.768011	107 (Basic Analysis)	NW
9023	1	12.411951	I-126 NB (Basic Analysis)	NW
9023	2	13.315438	I-126 NB (Basic Analysis)	NW
9023	3	11.794399	I-126 NB (Basic Analysis)	NW
9023	4	11.430635	I-126 NB (Basic Analysis)	NW
9023	5	13.024427	I-126 NB (Basic Analysis)	NW
9023	6	13.949909	I-126 NB (Basic Analysis)	NW
9023	7	11.958515	I-126 NB (Basic Analysis)	NW
9023	8	13.215615	I-126 NB (Basic Analysis)	NW
9023	9	11.853616	I-126 NB (Basic Analysis)	NW
9023	10	12.689426	I-126 NB (Basic Analysis)	NW
9025	1	22.206737	CD ROAD I-26 WB TO I-20 (Diverge Analysis)	NE
9025	2	21.961669	CD ROAD I-26 WB TO I-20 (Diverge Analysis)	NE
9025	3	21.223912	CD ROAD I-26 WB TO I-20 (Diverge Analysis)	NE
9025	4	23.552058	CD ROAD I-26 WB TO I-20 (Diverge Analysis)	NE
9025	5	22.260346	CD ROAD I-26 WB TO I-20 (Diverge Analysis)	NE
9025	6	20.766962	CD ROAD I-26 WB TO I-20 (Diverge Analysis)	NE
9025	7	23.368257	CD ROAD I-26 WB TO I-20 (Diverge Analysis)	NE
9025	8	22.967469	CD ROAD I-26 WB TO I-20 (Diverge Analysis)	NE
9025	9	23.52653	CD ROAD I-26 WB TO I-20 (Diverge Analysis)	NE
9025	10	23.426971	CD ROAD I-26 WB TO I-20 (Diverge Analysis)	NE
9033	1	28.293626	I-26 WB (Basic Analysis)	NW
9033	2	27.787719	I-26 WB (Basic Analysis)	NW
9033	3	27.835412	I-26 WB (Basic Analysis)	NW
9033	4	26.653659	I-26 WB (Basic Analysis)	NW
9033	5	27.683122	I-26 WB (Basic Analysis)	NW
9033	6	27.287443	I-26 WB (Basic Analysis)	NW
9033	7	26.633129	I-26 WB (Basic Analysis)	NW
9033	8	27.417191	I-26 WB (Basic Analysis)	NW
9033	9	27.412658	I-26 WB (Basic Analysis)	NW
9033	10	27.653471	I-26 WB (Basic Analysis)	NW
9039	1	56.628549	I-20 EB (Basic Analysis)	NE
9039	2	57.493605	I-20 EB (Basic Analysis)	NE
9039	3	56.630433	I-20 EB (Basic Analysis)	NE
9039	4	58.540352	I-20 EB (Basic Analysis)	NE
9039	5	58.210903	I-20 EB (Basic Analysis)	NE
9039	6	56.449472	I-20 EB (Basic Analysis)	NE
9039	7	56.53323	I-20 EB (Basic Analysis)	NE
9039	8	56.564499	I-20 EB (Basic Analysis)	NE
9039	9	56.99883	I-20 EB (Basic Analysis)	NE
9039	10	56.641015	I-20 EB (Basic Analysis)	NE
9040	1	36.867171	I-20 WB (Basic Analysis)	SW
9040	2	35.051371	I-20 WB (Basic Analysis)	SW
9040	3	38.062191	I-20 WB (Basic Analysis)	SW
9040	4	34.770279	I-20 WB (Basic Analysis)	SW

RPA AM

ID	Run	Density	Name (Type)	Direction
9040	5	35.004311	I-20 WB (Basic Analysis)	SW
9040	6	35.962388	I-20 WB (Basic Analysis)	SW
9040	7	36.876816	I-20 WB (Basic Analysis)	SW
9040	8	37.862518	I-20 WB (Basic Analysis)	SW
9040	9	38.162918	I-20 WB (Basic Analysis)	SW
9040	10	36.608717	I-20 WB (Basic Analysis)	SW
9042	1	9.355259	I-20 WB (Basic Analysis)	W
9042	2	9.713301	I-20 WB (Basic Analysis)	W
9042	3	10.249421	I-20 WB (Basic Analysis)	W
9042	4	8.859653	I-20 WB (Basic Analysis)	W
9042	5	9.556893	I-20 WB (Basic Analysis)	W
9042	6	9.576679	I-20 WB (Basic Analysis)	W
9042	7	10.352123	I-20 WB (Basic Analysis)	W
9042	8	8.772027	I-20 WB (Basic Analysis)	W
9042	9	10.211733	I-20 WB (Basic Analysis)	W
9042	10	10.4275	I-20 WB (Basic Analysis)	W
9043	1	26.676646	CD ROAD I-20 WB (Basic Analysis)	W
9043	2	25.459949	CD ROAD I-20 WB (Basic Analysis)	W
9043	3	25.365485	CD ROAD I-20 WB (Basic Analysis)	W
9043	4	23.691582	CD ROAD I-20 WB (Basic Analysis)	W
9043	5	23.504544	CD ROAD I-20 WB (Basic Analysis)	W
9043	6	24.912058	CD ROAD I-20 WB (Basic Analysis)	W
9043	7	24.963068	CD ROAD I-20 WB (Basic Analysis)	W
9043	8	26.446154	CD ROAD I-20 WB (Basic Analysis)	W
9043	9	25.121768	CD ROAD I-20 WB (Basic Analysis)	W
9043	10	24.929061	CD ROAD I-20 WB (Basic Analysis)	W
9045	1	53.113719	CD ROAD I-20 EB (Weaving Analysis)	E
9045	2	66.819488	CD ROAD I-20 EB (Weaving Analysis)	E
9045	3	60.884318	CD ROAD I-20 EB (Weaving Analysis)	E
9045	4	57.800551	CD ROAD I-20 EB (Weaving Analysis)	E
9045	5	61.681524	CD ROAD I-20 EB (Weaving Analysis)	E
9045	6	56.993457	CD ROAD I-20 EB (Weaving Analysis)	E
9045	7	61.098142	CD ROAD I-20 EB (Weaving Analysis)	E
9045	8	50.167145	CD ROAD I-20 EB (Weaving Analysis)	E
9045	9	50.382206	CD ROAD I-20 EB (Weaving Analysis)	E
9045	10	60.109359	CD ROAD I-20 EB (Weaving Analysis)	E
9052	1	29.952384	CD ROAD I-20 EB (Basic Analysis)	NE
9052	2	31.138838	CD ROAD I-20 EB (Basic Analysis)	NE
9052	3	29.379677	CD ROAD I-20 EB (Basic Analysis)	NE
9052	4	29.049484	CD ROAD I-20 EB (Basic Analysis)	NE
9052	5	29.911343	CD ROAD I-20 EB (Basic Analysis)	NE
9052	6	29.094256	CD ROAD I-20 EB (Basic Analysis)	NE
9052	7	29.926267	CD ROAD I-20 EB (Basic Analysis)	NE
9052	8	30.63702	CD ROAD I-20 EB (Basic Analysis)	NE
9052	9	29.793817	CD ROAD I-20 EB (Basic Analysis)	NE
9052	10	30.012079	CD ROAD I-20 EB (Basic Analysis)	NE
9054	1	9.166049	I-20 WB (Basic Analysis)	SW
9054	2	9.717536	I-20 WB (Basic Analysis)	SW
9054	3	9.546412	I-20 WB (Basic Analysis)	SW
9054	4	9.008147	I-20 WB (Basic Analysis)	SW
9054	5	9.033816	I-20 WB (Basic Analysis)	SW
9054	6	9.405623	I-20 WB (Basic Analysis)	SW
9054	7	9.400956	I-20 WB (Basic Analysis)	SW
9054	8	9.38851	I-20 WB (Basic Analysis)	SW
9054	9	9.331728	I-20 WB (Basic Analysis)	SW
9054	10	9.747094	I-20 WB (Basic Analysis)	SW
9055	1	9.166049	I-20 WB (Basic Analysis)	SW

RPA AM

ID	Run	Density	Name (Type)	Direction
9055	2	9.717536	I-20 WB (Basic Analysis)	SW
9055	3	9.546412	I-20 WB (Basic Analysis)	SW
9055	4	9.008147	I-20 WB (Basic Analysis)	SW
9055	5	9.033816	I-20 WB (Basic Analysis)	SW
9055	6	9.405623	I-20 WB (Basic Analysis)	SW
9055	7	9.400956	I-20 WB (Basic Analysis)	SW
9055	8	9.38851	I-20 WB (Basic Analysis)	SW
9055	9	9.331728	I-20 WB (Basic Analysis)	SW
9055	10	9.747094	I-20 WB (Basic Analysis)	SW
9059	1	10.78486	I-20 WB (Merge Analysis)	SW
9059	2	10.39179	I-20 WB (Merge Analysis)	SW
9059	3	11.486771	I-20 WB (Merge Analysis)	SW
9059	4	11.462205	I-20 WB (Merge Analysis)	SW
9059	5	9.984682	I-20 WB (Merge Analysis)	SW
9059	6	11.511338	I-20 WB (Merge Analysis)	SW
9059	7	12.729154	I-20 WB (Merge Analysis)	SW
9059	8	11.676287	I-20 WB (Merge Analysis)	SW
9059	9	12.290459	I-20 WB (Merge Analysis)	SW
9059	10	11.476243	I-20 WB (Merge Analysis)	SW
9061	1	31.130778	I-20 EB (Basic Analysis)	NE
9061	2	33.559032	I-20 EB (Basic Analysis)	NE
9061	3	30.760785	I-20 EB (Basic Analysis)	NE
9061	4	28.675294	I-20 EB (Basic Analysis)	NE
9061	5	31.156604	I-20 EB (Basic Analysis)	NE
9061	6	33.929025	I-20 EB (Basic Analysis)	NE
9061	7	31.77251	I-20 EB (Basic Analysis)	NE
9061	8	31.565056	I-20 EB (Basic Analysis)	NE
9061	9	29.561536	I-20 EB (Basic Analysis)	NE
9061	10	29.618242	I-20 EB (Basic Analysis)	NE
9063	1	25.500085	I-26 WB (Basic Analysis)	NW
9063	2	23.874939	I-26 WB (Basic Analysis)	NW
9063	3	24.810864	I-26 WB (Basic Analysis)	NW
9063	4	23.566283	I-26 WB (Basic Analysis)	NW
9063	5	24.046415	I-26 WB (Basic Analysis)	NW
9063	6	25.04208	I-26 WB (Basic Analysis)	NW
9063	7	23.083938	I-26 WB (Basic Analysis)	NW
9063	8	22.691204	I-26 WB (Basic Analysis)	NW
9063	9	24.348433	I-26 WB (Basic Analysis)	NW
9063	10	24.036458	I-26 WB (Basic Analysis)	NW
9064	1	25.599192	I-26 WB (Diverge Analysis)	NW
9064	2	27.318125	I-26 WB (Diverge Analysis)	NW
9064	3	27.306392	I-26 WB (Diverge Analysis)	NW
9064	4	24.848259	I-26 WB (Diverge Analysis)	NW
9064	5	24.428793	I-26 WB (Diverge Analysis)	NW
9064	6	25.613859	I-26 WB (Diverge Analysis)	NW
9064	7	25.763459	I-26 WB (Diverge Analysis)	NW
9064	8	27.291725	I-26 WB (Diverge Analysis)	NW
9064	9	27.561592	I-26 WB (Diverge Analysis)	NW
9064	10	26.960259	I-26 WB (Diverge Analysis)	NW
9067	1	20.131121	I-26 EB (Merge Analysis)	SW
9067	2	20.053784	I-26 EB (Merge Analysis)	SW
9067	3	20.951258	I-26 EB (Merge Analysis)	SW
9067	4	19.825369	I-26 EB (Merge Analysis)	SW
9067	5	19.550191	I-26 EB (Merge Analysis)	SW
9067	6	19.773211	I-26 EB (Merge Analysis)	SW
9067	7	20.066374	I-26 EB (Merge Analysis)	SW
9067	8	20.55378	I-26 EB (Merge Analysis)	SW

RPA AM

ID	Run	Density	Name (Type)	Direction
9067	9	20.929676	I-26 EB (Merge Analysis)	SW
9067	10	20.50342	I-26 EB (Merge Analysis)	SW
9089	1	25.656883	I-26 EB (Diverge Analysis)	SE
9089	2	25.424172	I-26 EB (Diverge Analysis)	SE
9089	3	26.259194	I-26 EB (Diverge Analysis)	SE
9089	4	24.260617	I-26 EB (Diverge Analysis)	SE
9089	5	23.441239	I-26 EB (Diverge Analysis)	SE
9089	6	24.596972	I-26 EB (Diverge Analysis)	SE
9089	7	22.70595	I-26 EB (Diverge Analysis)	SE
9089	8	22.54755	I-26 EB (Diverge Analysis)	SE
9089	9	24.108083	I-26 EB (Diverge Analysis)	SE
9089	10	23.959461	I-26 EB (Diverge Analysis)	SE
9110	1	20.131121	I-26 EB (Merge Analysis)	SW
9110	2	20.053784	I-26 EB (Merge Analysis)	SW
9110	3	20.951258	I-26 EB (Merge Analysis)	SW
9110	4	19.825369	I-26 EB (Merge Analysis)	SW
9110	5	19.550191	I-26 EB (Merge Analysis)	SW
9110	6	19.773211	I-26 EB (Merge Analysis)	SW
9110	7	20.066374	I-26 EB (Merge Analysis)	SW
9110	8	20.55378	I-26 EB (Merge Analysis)	SW
9110	9	20.929676	I-26 EB (Merge Analysis)	SW
9110	10	20.50342	I-26 EB (Merge Analysis)	SW
9111	1	38.457977	(Merge Analysis)	SE
9111	2	38.96553	(Merge Analysis)	SE
9111	3	38.525471	(Merge Analysis)	SE
9111	4	38.736051	(Merge Analysis)	SE
9111	5	38.710404	(Merge Analysis)	SE
9111	6	37.76954	(Merge Analysis)	SE
9111	7	38.2069	(Merge Analysis)	SE
9111	8	38.085411	(Merge Analysis)	SE
9111	9	37.387525	(Merge Analysis)	SE
9111	10	38.003068	(Merge Analysis)	SE
9112	1	17.443336	I-26 EB (Basic Analysis)	S
9112	2	17.28203	I-26 EB (Basic Analysis)	S
9112	3	16.932525	I-26 EB (Basic Analysis)	S
9112	4	17.901837	I-26 EB (Basic Analysis)	S
9112	5	17.098118	I-26 EB (Basic Analysis)	S
9112	6	17.55076	I-26 EB (Basic Analysis)	S
9112	7	17.090004	I-26 EB (Basic Analysis)	S
9112	8	17.336907	I-26 EB (Basic Analysis)	S
9112	9	16.242395	I-26 EB (Basic Analysis)	S
9112	10	16.808694	I-26 EB (Basic Analysis)	S
9113	1	6.364619	I-126 NB (Merge+Diverge Analysis)	NW
9113	2	6.671309	I-126 NB (Merge+Diverge Analysis)	NW
9113	3	6.740868	I-126 NB (Merge+Diverge Analysis)	NW
9113	4	5.997855	I-126 NB (Merge+Diverge Analysis)	NW
9113	5	5.220062	I-126 NB (Merge+Diverge Analysis)	NW
9113	6	6.744029	I-126 NB (Merge+Diverge Analysis)	NW
9113	7	6.791456	I-126 NB (Merge+Diverge Analysis)	NW
9113	8	5.561532	I-126 NB (Merge+Diverge Analysis)	NW
9113	9	6.054766	I-126 NB (Merge+Diverge Analysis)	NW
9113	10	5.729105	I-126 NB (Merge+Diverge Analysis)	NW
9114	1	10.279993	I-126 NB (Diverge Analysis)	NW
9114	2	9.999744	I-126 NB (Diverge Analysis)	NW
9114	3	10.509974	I-126 NB (Diverge Analysis)	NW
9114	4	9.98592	I-126 NB (Diverge Analysis)	NW
9114	5	9.890409	I-126 NB (Diverge Analysis)	NW

RPA AM

ID	Run	Density	Name (Type)	Direction
9114	6	10.542648	I-126 NB (Diverge Analysis)	NW
9114	7	9.75217	I-126 NB (Diverge Analysis)	NW
9114	8	10.556472	I-126 NB (Diverge Analysis)	NW
9114	9	9.587539	I-126 NB (Diverge Analysis)	NW
9114	10	9.936908	I-126 NB (Diverge Analysis)	NW
9115	1	20.131121	I-26 EB (Merge Analysis)	SW
9115	2	20.053784	I-26 EB (Merge Analysis)	SW
9115	3	20.951258	I-26 EB (Merge Analysis)	SW
9115	4	19.825369	I-26 EB (Merge Analysis)	SW
9115	5	19.550191	I-26 EB (Merge Analysis)	SW
9115	6	19.773211	I-26 EB (Merge Analysis)	SW
9115	7	20.066374	I-26 EB (Merge Analysis)	SW
9115	8	20.55378	I-26 EB (Merge Analysis)	SW
9115	9	20.929676	I-26 EB (Merge Analysis)	SW
9115	10	20.50342	I-26 EB (Merge Analysis)	SW
9118	1	28.240171	I-26 EB (Diverge Analysis)	SE
9118	2	28.036628	I-26 EB (Diverge Analysis)	SE
9118	3	26.614733	I-26 EB (Diverge Analysis)	SE
9118	4	30.179648	I-26 EB (Diverge Analysis)	SE
9118	5	24.899154	I-26 EB (Diverge Analysis)	SE
9118	6	26.745583	I-26 EB (Diverge Analysis)	SE
9118	7	28.275065	I-26 EB (Diverge Analysis)	SE
9118	8	25.818007	I-26 EB (Diverge Analysis)	SE
9118	9	29.135762	I-26 EB (Diverge Analysis)	SE
9118	10	25.24227	I-26 EB (Diverge Analysis)	SE
9119	1	21.798925	I-26 EB (Diverge Analysis)	SE
9119	2	24.609675	I-26 EB (Diverge Analysis)	SE
9119	3	24.615921	I-26 EB (Diverge Analysis)	SE
9119	4	22.167446	I-26 EB (Diverge Analysis)	SE
9119	5	23.895536	I-26 EB (Diverge Analysis)	SE
9119	6	23.129347	I-26 EB (Diverge Analysis)	SE
9119	7	23.608215	I-26 EB (Diverge Analysis)	SE
9119	8	22.854518	I-26 EB (Diverge Analysis)	SE
9119	9	23.152249	I-26 EB (Diverge Analysis)	SE
9119	10	24.085002	I-26 EB (Diverge Analysis)	SE
9120	1	29.401439	I-26 EB (Diverge Analysis)	SE
9120	2	30.671109	I-26 EB (Diverge Analysis)	SE
9120	3	29.643935	I-26 EB (Diverge Analysis)	SE
9120	4	30.069445	I-26 EB (Diverge Analysis)	SE
9120	5	29.717141	I-26 EB (Diverge Analysis)	SE
9120	6	29.518111	I-26 EB (Diverge Analysis)	SE
9120	7	29.12234	I-26 EB (Diverge Analysis)	SE
9120	8	29.785772	I-26 EB (Diverge Analysis)	SE
9120	9	29.433467	I-26 EB (Diverge Analysis)	SE
9120	10	28.273606	I-26 EB (Diverge Analysis)	SE
9121	1	41.947796	I-26 EB (Basic Analysis)	SE
9121	2	40.090777	I-26 EB (Basic Analysis)	SE
9121	3	43.179054	I-26 EB (Basic Analysis)	SE
9121	4	41.215348	I-26 EB (Basic Analysis)	SE
9121	5	39.90211	I-26 EB (Basic Analysis)	SE
9121	6	40.863382	I-26 EB (Basic Analysis)	SE
9121	7	42.631172	I-26 EB (Basic Analysis)	SE
9121	8	37.140236	I-26 EB (Basic Analysis)	SE
9121	9	42.544421	I-26 EB (Basic Analysis)	SE
9121	10	39.706194	I-26 EB (Basic Analysis)	SE
9122	1	33.61599	I-26 EB (Diverge Analysis)	SE
9122	2	33.46639	I-26 EB (Diverge Analysis)	SE

RPA AM

ID	Run	Density	Name (Type)	Direction
9122	3	33.926923	I-26 EB (Diverge Analysis)	SE
9122	4	33.469323	I-26 EB (Diverge Analysis)	SE
9122	5	33.29039	I-26 EB (Diverge Analysis)	SE
9122	6	32.228523	I-26 EB (Diverge Analysis)	SE
9122	7	34.041323	I-26 EB (Diverge Analysis)	SE
9122	8	32.14639	I-26 EB (Diverge Analysis)	SE
9122	9	33.076257	I-26 EB (Diverge Analysis)	SE
9122	10	33.59839	I-26 EB (Diverge Analysis)	SE
9123	1	35.278651	I-26 EB (Weaving Analysis)	SE
9123	2	36.724343	I-26 EB (Weaving Analysis)	SE
9123	3	35.288849	I-26 EB (Weaving Analysis)	SE
9123	4	34.946056	I-26 EB (Weaving Analysis)	SE
9123	5	36.236432	I-26 EB (Weaving Analysis)	SE
9123	6	37.105573	I-26 EB (Weaving Analysis)	SE
9123	7	35.632426	I-26 EB (Weaving Analysis)	SE
9123	8	33.084619	I-26 EB (Weaving Analysis)	SE
9123	9	38.382614	I-26 EB (Weaving Analysis)	SE
9123	10	34.521683	I-26 EB (Weaving Analysis)	SE
9125	1	28.003625	I-26 EB (Basic Analysis)	SE
9125	2	28.760074	I-26 EB (Basic Analysis)	SE
9125	3	28.503803	I-26 EB (Basic Analysis)	SE
9125	4	27.821059	I-26 EB (Basic Analysis)	SE
9125	5	27.457867	I-26 EB (Basic Analysis)	SE
9125	6	29.283284	I-26 EB (Basic Analysis)	SE
9125	7	27.112131	I-26 EB (Basic Analysis)	SE
9125	8	26.762031	I-26 EB (Basic Analysis)	SE
9125	9	27.439926	I-26 EB (Basic Analysis)	SE
9125	10	27.897432	I-26 EB (Basic Analysis)	SE
9126	1	28.003625	I-26 EB (Basic Analysis)	SE
9126	2	28.760074	I-26 EB (Basic Analysis)	SE
9126	3	28.503803	I-26 EB (Basic Analysis)	SE
9126	4	27.821059	I-26 EB (Basic Analysis)	SE
9126	5	27.457867	I-26 EB (Basic Analysis)	SE
9126	6	29.283284	I-26 EB (Basic Analysis)	SE
9126	7	27.112131	I-26 EB (Basic Analysis)	SE
9126	8	26.762031	I-26 EB (Basic Analysis)	SE
9126	9	27.439926	I-26 EB (Basic Analysis)	SE
9126	10	27.897432	I-26 EB (Basic Analysis)	SE
9127	1	74.424249	I-26 EB (Basic Analysis)	SE
9127	2	74.358389	I-26 EB (Basic Analysis)	SE
9127	3	77.546944	I-26 EB (Basic Analysis)	SE
9127	4	71.330467	I-26 EB (Basic Analysis)	SE
9127	5	68.556344	I-26 EB (Basic Analysis)	SE
9127	6	77.80235	I-26 EB (Basic Analysis)	SE
9127	7	69.208511	I-26 EB (Basic Analysis)	SE
9127	8	68.453538	I-26 EB (Basic Analysis)	SE
9127	9	66.003893	I-26 EB (Basic Analysis)	SE
9127	10	71.099156	I-26 EB (Basic Analysis)	SE
9128	1	21.522576	I-26 EB (Diverge Analysis)	SW
9128	2	21.517392	I-26 EB (Diverge Analysis)	SW
9128	3	22.777777	I-26 EB (Diverge Analysis)	SW
9128	4	21.586734	I-26 EB (Diverge Analysis)	SW
9128	5	21.159953	I-26 EB (Diverge Analysis)	SW
9128	6	21.369087	I-26 EB (Diverge Analysis)	SW
9128	7	21.65002	I-26 EB (Diverge Analysis)	SW
9128	8	22.104849	I-26 EB (Diverge Analysis)	SW
9128	9	21.801147	I-26 EB (Diverge Analysis)	SW

RPA AM

ID	Run	Density	Name (Type)	Direction
9128	10	21.936452	I-26 EB (Diverge Analysis)	SW
9130	1	38.457977	(Merge Analysis)	SE
9130	2	38.96553	(Merge Analysis)	SE
9130	3	38.525471	(Merge Analysis)	SE
9130	4	38.736051	(Merge Analysis)	SE
9130	5	38.710404	(Merge Analysis)	SE
9130	6	37.76954	(Merge Analysis)	SE
9130	7	38.2069	(Merge Analysis)	SE
9130	8	38.085411	(Merge Analysis)	SE
9130	9	37.387525	(Merge Analysis)	SE
9130	10	38.003068	(Merge Analysis)	SE
9131	1	30.926777	(Diverge Analysis)	SE
9131	2	29.53465	(Diverge Analysis)	SE
9131	3	29.065754	(Diverge Analysis)	SE
9131	4	28.803637	(Diverge Analysis)	SE
9131	5	29.051192	(Diverge Analysis)	SE
9131	6	30.312261	(Diverge Analysis)	SE
9131	7	27.609553	(Diverge Analysis)	SE
9131	8	28.547347	(Diverge Analysis)	SE
9131	9	30.530691	(Diverge Analysis)	SE
9131	10	27.894969	(Diverge Analysis)	SE
9132	1	34.613279	I-126 SB (Diverge Analysis)	E
9132	2	37.599272	I-126 SB (Diverge Analysis)	E
9132	3	33.413065	I-126 SB (Diverge Analysis)	E
9132	4	34.898306	I-126 SB (Diverge Analysis)	E
9132	5	32.478488	I-126 SB (Diverge Analysis)	E
9132	6	31.755257	I-126 SB (Diverge Analysis)	E
9132	7	34.217732	I-126 SB (Diverge Analysis)	E
9132	8	33.346171	I-126 SB (Diverge Analysis)	E
9132	9	34.176044	I-126 SB (Diverge Analysis)	E
9132	10	32.009261	I-126 SB (Diverge Analysis)	E
9133	1	15.272677	I-126 NB (Basic Analysis)	W
9133	2	15.744056	I-126 NB (Basic Analysis)	W
9133	3	15.580135	I-126 NB (Basic Analysis)	W
9133	4	14.970315	I-126 NB (Basic Analysis)	W
9133	5	14.870094	I-126 NB (Basic Analysis)	W
9133	6	14.777517	I-126 NB (Basic Analysis)	W
9133	7	15.152922	I-126 NB (Basic Analysis)	W
9133	8	15.495202	I-126 NB (Basic Analysis)	W
9133	9	15.949595	I-126 NB (Basic Analysis)	W
9133	10	15.915621	I-126 NB (Basic Analysis)	W
9134	1	16.802128	I-126 NB (Diverge Analysis)	W
9134	2	16.227195	I-126 NB (Diverge Analysis)	W
9134	3	15.526129	I-126 NB (Diverge Analysis)	W
9134	4	14.710662	I-126 NB (Diverge Analysis)	W
9134	5	16.285862	I-126 NB (Diverge Analysis)	W
9134	6	17.544261	I-126 NB (Diverge Analysis)	W
9134	7	15.989595	I-126 NB (Diverge Analysis)	W
9134	8	16.781595	I-126 NB (Diverge Analysis)	W
9134	9	14.167996	I-126 NB (Diverge Analysis)	W
9134	10	15.989595	I-126 NB (Diverge Analysis)	W
9135	1	15.511811	I-126 NB (Basic Analysis)	NW
9135	2	14.883175	I-126 NB (Basic Analysis)	NW
9135	3	14.114115	I-126 NB (Basic Analysis)	NW
9135	4	13.583448	I-126 NB (Basic Analysis)	NW
9135	5	13.402205	I-126 NB (Basic Analysis)	NW
9135	6	14.368836	I-126 NB (Basic Analysis)	NW

RPA AM

ID	Run	Density	Name (Type)	Direction
9135	7	14.50436	I-126 NB (Basic Analysis)	NW
9135	8	15.222802	I-126 NB (Basic Analysis)	NW
9135	9	14.236577	I-126 NB (Basic Analysis)	NW
9135	10	13.7353	I-126 NB (Basic Analysis)	NW
9136	1	15.511811	I-126 NB (Basic Analysis)	NW
9136	2	14.883175	I-126 NB (Basic Analysis)	NW
9136	3	14.114115	I-126 NB (Basic Analysis)	NW
9136	4	13.583448	I-126 NB (Basic Analysis)	NW
9136	5	13.402205	I-126 NB (Basic Analysis)	NW
9136	6	14.368836	I-126 NB (Basic Analysis)	NW
9136	7	14.50436	I-126 NB (Basic Analysis)	NW
9136	8	15.222802	I-126 NB (Basic Analysis)	NW
9136	9	14.236577	I-126 NB (Basic Analysis)	NW
9136	10	13.7353	I-126 NB (Basic Analysis)	NW
9137	1	63.563758	I-26 WB (Diverge Analysis)	N
9137	2	49.258758	I-26 WB (Diverge Analysis)	N
9137	3	32.47289	I-26 WB (Diverge Analysis)	N
9137	4	57.470859	I-26 WB (Diverge Analysis)	N
9137	5	32.043509	I-26 WB (Diverge Analysis)	N
9137	6	49.951307	I-26 WB (Diverge Analysis)	N
9137	7	32.957674	I-26 WB (Diverge Analysis)	N
9137	8	65.736825	I-26 WB (Diverge Analysis)	N
9137	9	57.750957	I-26 WB (Diverge Analysis)	N
9137	10	39.633854	I-26 WB (Diverge Analysis)	N
9138	1	16.636042	I-26 WB (Basic Analysis)	N
9138	2	17.282771	I-26 WB (Basic Analysis)	N
9138	3	16.665071	I-26 WB (Basic Analysis)	N
9138	4	17.160581	I-26 WB (Basic Analysis)	N
9138	5	17.305049	I-26 WB (Basic Analysis)	N
9138	6	16.803125	I-26 WB (Basic Analysis)	N
9138	7	17.020839	I-26 WB (Basic Analysis)	N
9138	8	16.642456	I-26 WB (Basic Analysis)	N
9138	9	17.291547	I-26 WB (Basic Analysis)	N
9138	10	17.362093	I-26 WB (Basic Analysis)	N
9139	1	16.636042	I-26 WB (Basic Analysis)	N
9139	2	17.282771	I-26 WB (Basic Analysis)	N
9139	3	16.665071	I-26 WB (Basic Analysis)	N
9139	4	17.160581	I-26 WB (Basic Analysis)	N
9139	5	17.305049	I-26 WB (Basic Analysis)	N
9139	6	16.803125	I-26 WB (Basic Analysis)	N
9139	7	17.020839	I-26 WB (Basic Analysis)	N
9139	8	16.642456	I-26 WB (Basic Analysis)	N
9139	9	17.291547	I-26 WB (Basic Analysis)	N
9139	10	17.362093	I-26 WB (Basic Analysis)	N
9140	1	15.236131	I-26 WB (Basic Analysis)	NW
9140	2	15.303813	I-26 WB (Basic Analysis)	NW
9140	3	15.063808	I-26 WB (Basic Analysis)	NW
9140	4	15.212976	I-26 WB (Basic Analysis)	NW
9140	5	14.993008	I-26 WB (Basic Analysis)	NW
9140	6	14.707139	I-26 WB (Basic Analysis)	NW
9140	7	15.041098	I-26 WB (Basic Analysis)	NW
9140	8	14.59003	I-26 WB (Basic Analysis)	NW
9140	9	15.470793	I-26 WB (Basic Analysis)	NW
9140	10	15.460107	I-26 WB (Basic Analysis)	NW
9141	1	15.236131	I-26 WB (Basic Analysis)	NW
9141	2	15.303813	I-26 WB (Basic Analysis)	NW
9141	3	15.063808	I-26 WB (Basic Analysis)	NW

RPA AM

ID	Run	Density	Name (Type)	Direction
9141	4	15.212976	I-26 WB (Basic Analysis)	NW
9141	5	14.993008	I-26 WB (Basic Analysis)	NW
9141	6	14.707139	I-26 WB (Basic Analysis)	NW
9141	7	15.041098	I-26 WB (Basic Analysis)	NW
9141	8	14.59003	I-26 WB (Basic Analysis)	NW
9141	9	15.470793	I-26 WB (Basic Analysis)	NW
9141	10	15.460107	I-26 WB (Basic Analysis)	NW
9142	1	35.07253	I-26 WB (Basic Analysis)	NW
9142	2	33.897541	I-26 WB (Basic Analysis)	NW
9142	3	36.379589	I-26 WB (Basic Analysis)	NW
9142	4	35.509392	I-26 WB (Basic Analysis)	NW
9142	5	30.45493	I-26 WB (Basic Analysis)	NW
9142	6	37.360375	I-26 WB (Basic Analysis)	NW
9142	7	36.733467	I-26 WB (Basic Analysis)	NW
9142	8	35.760714	I-26 WB (Basic Analysis)	NW
9142	9	37.768851	I-26 WB (Basic Analysis)	NW
9142	10	35.783178	I-26 WB (Basic Analysis)	NW
9143	1	28.293626	I-26 WB (Basic Analysis)	NW
9143	2	27.787719	I-26 WB (Basic Analysis)	NW
9143	3	27.835412	I-26 WB (Basic Analysis)	NW
9143	4	26.653659	I-26 WB (Basic Analysis)	NW
9143	5	27.683122	I-26 WB (Basic Analysis)	NW
9143	6	27.287443	I-26 WB (Basic Analysis)	NW
9143	7	26.633129	I-26 WB (Basic Analysis)	NW
9143	8	27.417191	I-26 WB (Basic Analysis)	NW
9143	9	27.412658	I-26 WB (Basic Analysis)	NW
9143	10	27.653471	I-26 WB (Basic Analysis)	NW
9147	1	23.126665	I-26 WB (Basic Analysis)	NW
9147	2	24.614065	I-26 WB (Basic Analysis)	NW
9147	3	23.829438	I-26 WB (Basic Analysis)	NW
9147	4	20.41676	I-26 WB (Basic Analysis)	NW
9147	5	22.840241	I-26 WB (Basic Analysis)	NW
9147	6	25.042357	I-26 WB (Basic Analysis)	NW
9147	7	20.993183	I-26 WB (Basic Analysis)	NW
9147	8	21.458962	I-26 WB (Basic Analysis)	NW
9147	9	22.660038	I-26 WB (Basic Analysis)	NW
9147	10	21.226932	I-26 WB (Basic Analysis)	NW
9148	1	23.278926	I-26 WB (Diverge Analysis)	NW
9148	2	22.319727	I-26 WB (Diverge Analysis)	NW
9148	3	25.508259	I-26 WB (Diverge Analysis)	NW
9148	4	21.99706	I-26 WB (Diverge Analysis)	NW
9148	5	23.724793	I-26 WB (Diverge Analysis)	NW
9148	6	25.299992	I-26 WB (Diverge Analysis)	NW
9148	7	24.505059	I-26 WB (Diverge Analysis)	NW
9148	8	23.31706	I-26 WB (Diverge Analysis)	NW
9148	9	24.601859	I-26 WB (Diverge Analysis)	NW
9148	10	24.243993	I-26 WB (Diverge Analysis)	NW
9149	1	15.584002	I-26 WB (Diverge Analysis)	NW
9149	2	14.910061	I-26 WB (Diverge Analysis)	NW
9149	3	17.527239	I-26 WB (Diverge Analysis)	NW
9149	4	14.376623	I-26 WB (Diverge Analysis)	NW
9149	5	15.322046	I-26 WB (Diverge Analysis)	NW
9149	6	16.75566	I-26 WB (Diverge Analysis)	NW
9149	7	16.36987	I-26 WB (Diverge Analysis)	NW
9149	8	15.207738	I-26 WB (Diverge Analysis)	NW
9149	9	14.852907	I-26 WB (Diverge Analysis)	NW
9149	10	16.13411	I-26 WB (Diverge Analysis)	NW

RPA AM

ID	Run	Density	Name (Type)	Direction
9151	1	39.847983	I-20 EB (Diverge Analysis)	NE
9151	2	47.40616	I-20 EB (Diverge Analysis)	NE
9151	3	40.078307	I-20 EB (Diverge Analysis)	NE
9151	4	40.211756	I-20 EB (Diverge Analysis)	NE
9151	5	44.634367	I-20 EB (Diverge Analysis)	NE
9151	6	38.798181	I-20 EB (Diverge Analysis)	NE
9151	7	44.372411	I-20 EB (Diverge Analysis)	NE
9151	8	39.707614	I-20 EB (Diverge Analysis)	NE
9151	9	36.909131	I-20 EB (Diverge Analysis)	NE
9151	10	42.391429	I-20 EB (Diverge Analysis)	NE
9152	1	31.130778	I-20 EB (Basic Analysis)	NE
9152	2	33.559032	I-20 EB (Basic Analysis)	NE
9152	3	30.760785	I-20 EB (Basic Analysis)	NE
9152	4	28.675294	I-20 EB (Basic Analysis)	NE
9152	5	31.156604	I-20 EB (Basic Analysis)	NE
9152	6	33.929025	I-20 EB (Basic Analysis)	NE
9152	7	31.77251	I-20 EB (Basic Analysis)	NE
9152	8	31.565056	I-20 EB (Basic Analysis)	NE
9152	9	29.561536	I-20 EB (Basic Analysis)	NE
9152	10	29.618242	I-20 EB (Basic Analysis)	NE
9153	1	31.130778	I-20 EB (Basic Analysis)	NE
9153	2	33.559032	I-20 EB (Basic Analysis)	NE
9153	3	30.760785	I-20 EB (Basic Analysis)	NE
9153	4	28.675294	I-20 EB (Basic Analysis)	NE
9153	5	31.156604	I-20 EB (Basic Analysis)	NE
9153	6	33.929025	I-20 EB (Basic Analysis)	NE
9153	7	31.77251	I-20 EB (Basic Analysis)	NE
9153	8	31.565056	I-20 EB (Basic Analysis)	NE
9153	9	29.561536	I-20 EB (Basic Analysis)	NE
9153	10	29.618242	I-20 EB (Basic Analysis)	NE
9155	1	56.628549	I-20 EB (Basic Analysis)	NE
9155	2	57.493605	I-20 EB (Basic Analysis)	NE
9155	3	56.630433	I-20 EB (Basic Analysis)	NE
9155	4	58.540352	I-20 EB (Basic Analysis)	NE
9155	5	58.210903	I-20 EB (Basic Analysis)	NE
9155	6	56.449472	I-20 EB (Basic Analysis)	NE
9155	7	56.53323	I-20 EB (Basic Analysis)	NE
9155	8	56.564499	I-20 EB (Basic Analysis)	NE
9155	9	56.99883	I-20 EB (Basic Analysis)	NE
9155	10	56.641015	I-20 EB (Basic Analysis)	NE
9156	1	36.899161	I-20 EB (Basic Analysis)	NE
9156	2	36.918195	I-20 EB (Basic Analysis)	NE
9156	3	37.118049	I-20 EB (Basic Analysis)	NE
9156	4	37.890275	I-20 EB (Basic Analysis)	NE
9156	5	36.29552	I-20 EB (Basic Analysis)	NE
9156	6	37.026053	I-20 EB (Basic Analysis)	NE
9156	7	37.428027	I-20 EB (Basic Analysis)	NE
9156	8	37.038289	I-20 EB (Basic Analysis)	NE
9156	9	37.96505	I-20 EB (Basic Analysis)	NE
9156	10	37.44706	I-20 EB (Basic Analysis)	NE
9157	1	41.662121	I-20 WB (Diverge Analysis)	SW
9157	2	42.322121	I-20 WB (Diverge Analysis)	SW
9157	3	42.615454	I-20 WB (Diverge Analysis)	SW
9157	4	39.902121	I-20 WB (Diverge Analysis)	SW
9157	5	40.353854	I-20 WB (Diverge Analysis)	SW
9157	6	40.142654	I-20 WB (Diverge Analysis)	SW
9157	7	41.447987	I-20 WB (Diverge Analysis)	SW

RPA AM

ID	Run	Density	Name (Type)	Direction
9157	8	43.680254	I-20 WB (Diverge Analysis)	SW
9157	9	42.392521	I-20 WB (Diverge Analysis)	SW
9157	10	43.152254	I-20 WB (Diverge Analysis)	SW
9158	1	36.867171	I-20 WB (Basic Analysis)	SW
9158	2	35.051371	I-20 WB (Basic Analysis)	SW
9158	3	38.062191	I-20 WB (Basic Analysis)	SW
9158	4	34.770279	I-20 WB (Basic Analysis)	SW
9158	5	35.004311	I-20 WB (Basic Analysis)	SW
9158	6	35.962388	I-20 WB (Basic Analysis)	SW
9158	7	36.876816	I-20 WB (Basic Analysis)	SW
9158	8	37.862518	I-20 WB (Basic Analysis)	SW
9158	9	38.162918	I-20 WB (Basic Analysis)	SW
9158	10	36.608717	I-20 WB (Basic Analysis)	SW
9159	1	11.575568	I-20 WB (Basic Analysis)	W
9159	2	10.951307	I-20 WB (Basic Analysis)	W
9159	3	10.633938	I-20 WB (Basic Analysis)	W
9159	4	10.944095	I-20 WB (Basic Analysis)	W
9159	5	9.594311	I-20 WB (Basic Analysis)	W
9159	6	10.519112	I-20 WB (Basic Analysis)	W
9159	7	11.995802	I-20 WB (Basic Analysis)	W
9159	8	11.23369	I-20 WB (Basic Analysis)	W
9159	9	11.598612	I-20 WB (Basic Analysis)	W
9159	10	12.077895	I-20 WB (Basic Analysis)	W
9160	1	12.784213	I-20 WB (Merge Analysis)	SW
9160	2	12.528107	I-20 WB (Merge Analysis)	SW
9160	3	12.886656	I-20 WB (Merge Analysis)	SW
9160	4	12.351846	I-20 WB (Merge Analysis)	SW
9160	5	12.639588	I-20 WB (Merge Analysis)	SW
9160	6	13.094553	I-20 WB (Merge Analysis)	SW
9160	7	12.482912	I-20 WB (Merge Analysis)	SW
9160	8	13.183437	I-20 WB (Merge Analysis)	SW
9160	9	12.65616	I-20 WB (Merge Analysis)	SW
9160	10	13.391335	I-20 WB (Merge Analysis)	SW
9162	1	10.644008	I-20 WB (Merge Analysis)	SW
9162	2	11.158176	I-20 WB (Merge Analysis)	SW
9162	3	11.250775	I-20 WB (Merge Analysis)	SW
9162	4	10.046989	I-20 WB (Merge Analysis)	SW
9162	5	10.94861	I-20 WB (Merge Analysis)	SW
9162	6	9.403669	I-20 WB (Merge Analysis)	SW
9162	7	10.166393	I-20 WB (Merge Analysis)	SW
9162	8	10.636698	I-20 WB (Merge Analysis)	SW
9162	9	10.190761	I-20 WB (Merge Analysis)	SW
9162	10	10.736607	I-20 WB (Merge Analysis)	SW
9163	1	14.163418	I-20 WB (Merge Analysis)	S
9163	2	12.383929	I-20 WB (Merge Analysis)	S
9163	3	12.997859	I-20 WB (Merge Analysis)	S
9163	4	11.990879	I-20 WB (Merge Analysis)	S
9163	5	13.068087	I-20 WB (Merge Analysis)	S
9163	6	12.936692	I-20 WB (Merge Analysis)	S
9163	7	13.535896	I-20 WB (Merge Analysis)	S
9163	8	12.006737	I-20 WB (Merge Analysis)	S
9163	9	12.488139	I-20 WB (Merge Analysis)	S
9163	10	14.072801	I-20 WB (Merge Analysis)	S
9182	1	13.745557	I-26 EB (Merge Analysis)	S
9182	2	13.555165	I-26 EB (Merge Analysis)	S
9182	3	13.601242	I-26 EB (Merge Analysis)	S
9182	4	14.075916	I-26 EB (Merge Analysis)	S

RPA AM

ID	Run	Density	Name (Type)	Direction
9182	5	13.627323	I-26 EB (Merge Analysis)	S
9182	6	14.158506	I-26 EB (Merge Analysis)	S
9182	7	13.935079	I-26 EB (Merge Analysis)	S
9182	8	14.143727	I-26 EB (Merge Analysis)	S
9182	9	14.209799	I-26 EB (Merge Analysis)	S
9182	10	14.231533	I-26 EB (Merge Analysis)	S
9183	1	18.334229	I-20 EB (Basic Analysis)	E
9183	2	19.607123	I-20 EB (Basic Analysis)	E
9183	3	18.910086	I-20 EB (Basic Analysis)	E
9183	4	18.59264	I-20 EB (Basic Analysis)	E
9183	5	19.775426	I-20 EB (Basic Analysis)	E
9183	6	19.287087	I-20 EB (Basic Analysis)	E
9183	7	19.92923	I-20 EB (Basic Analysis)	E
9183	8	19.16539	I-20 EB (Basic Analysis)	E
9183	9	18.643907	I-20 EB (Basic Analysis)	E
9183	10	19.322301	I-20 EB (Basic Analysis)	E
9185	1	24.477168	I-20 WB (Basic Analysis)	SW
9185	2	26.713577	I-20 WB (Basic Analysis)	SW
9185	3	29.664378	I-20 WB (Basic Analysis)	SW
9185	4	25.408746	I-20 WB (Basic Analysis)	SW
9185	5	26.892492	I-20 WB (Basic Analysis)	SW
9185	6	29.013325	I-20 WB (Basic Analysis)	SW
9185	7	25.708742	I-20 WB (Basic Analysis)	SW
9185	8	31.882463	I-20 WB (Basic Analysis)	SW
9185	9	26.880879	I-20 WB (Basic Analysis)	SW
9185	10	32.181649	I-20 WB (Basic Analysis)	SW
9186	1	24.477168	I-20 WB (Basic Analysis)	SW
9186	2	26.713577	I-20 WB (Basic Analysis)	SW
9186	3	29.664378	I-20 WB (Basic Analysis)	SW
9186	4	25.408746	I-20 WB (Basic Analysis)	SW
9186	5	26.892492	I-20 WB (Basic Analysis)	SW
9186	6	29.013325	I-20 WB (Basic Analysis)	SW
9186	7	25.708742	I-20 WB (Basic Analysis)	SW
9186	8	31.882463	I-20 WB (Basic Analysis)	SW
9186	9	26.880879	I-20 WB (Basic Analysis)	SW
9186	10	32.181649	I-20 WB (Basic Analysis)	SW
9204	1	39.09961	CD ROAD I-26 EB (Basic Analysis)	SE
9204	2	53.122754	CD ROAD I-26 EB (Basic Analysis)	SE
9204	3	46.691186	CD ROAD I-26 EB (Basic Analysis)	SE
9204	4	42.145879	CD ROAD I-26 EB (Basic Analysis)	SE
9204	5	43.983945	CD ROAD I-26 EB (Basic Analysis)	SE
9204	6	47.67171	CD ROAD I-26 EB (Basic Analysis)	SE
9204	7	46.327229	CD ROAD I-26 EB (Basic Analysis)	SE
9204	8	30.589001	CD ROAD I-26 EB (Basic Analysis)	SE
9204	9	45.31513	CD ROAD I-26 EB (Basic Analysis)	SE
9204	10	45.188825	CD ROAD I-26 EB (Basic Analysis)	SE
9206	1	17.443336	I-26 EB (Basic Analysis)	S
9206	2	17.28203	I-26 EB (Basic Analysis)	S
9206	3	16.932525	I-26 EB (Basic Analysis)	S
9206	4	17.901837	I-26 EB (Basic Analysis)	S
9206	5	17.098118	I-26 EB (Basic Analysis)	S
9206	6	17.55076	I-26 EB (Basic Analysis)	S
9206	7	17.090004	I-26 EB (Basic Analysis)	S
9206	8	17.336907	I-26 EB (Basic Analysis)	S
9206	9	16.242395	I-26 EB (Basic Analysis)	S
9206	10	16.808694	I-26 EB (Basic Analysis)	S
9207	1	17.443336	I-26 EB (Basic Analysis)	S

RPA AM

ID	Run	Density	Name (Type)	Direction
9207	2	17.28203	I-26 EB (Basic Analysis)	S
9207	3	16.932525	I-26 EB (Basic Analysis)	S
9207	4	17.901837	I-26 EB (Basic Analysis)	S
9207	5	17.098118	I-26 EB (Basic Analysis)	S
9207	6	17.55076	I-26 EB (Basic Analysis)	S
9207	7	17.090004	I-26 EB (Basic Analysis)	S
9207	8	17.336907	I-26 EB (Basic Analysis)	S
9207	9	16.242395	I-26 EB (Basic Analysis)	S
9207	10	16.808694	I-26 EB (Basic Analysis)	S
9208	1	35.514631	(Basic Analysis)	SE
9208	2	37.175361	(Basic Analysis)	SE
9208	3	36.86673	(Basic Analysis)	SE
9208	4	37.310081	(Basic Analysis)	SE
9208	5	36.967157	(Basic Analysis)	SE
9208	6	35.073729	(Basic Analysis)	SE
9208	7	36.976955	(Basic Analysis)	SE
9208	8	36.722212	(Basic Analysis)	SE
9208	9	35.762026	(Basic Analysis)	SE
9208	10	37.439902	(Basic Analysis)	SE
9211	1	17.96126	I-20 EB (Basic Analysis)	NE
9211	2	18.825502	I-20 EB (Basic Analysis)	NE
9211	3	18.367962	I-20 EB (Basic Analysis)	NE
9211	4	18.621445	I-20 EB (Basic Analysis)	NE
9211	5	18.949066	I-20 EB (Basic Analysis)	NE
9211	6	18.679344	I-20 EB (Basic Analysis)	NE
9211	7	19.187015	I-20 EB (Basic Analysis)	NE
9211	8	18.442101	I-20 EB (Basic Analysis)	NE
9211	9	18.525418	I-20 EB (Basic Analysis)	NE
9211	10	18.592496	I-20 EB (Basic Analysis)	NE
9225	1	31.130778	I-20 EB (Basic Analysis)	NE
9225	2	33.559032	I-20 EB (Basic Analysis)	NE
9225	3	30.760785	I-20 EB (Basic Analysis)	NE
9225	4	28.675294	I-20 EB (Basic Analysis)	NE
9225	5	31.156604	I-20 EB (Basic Analysis)	NE
9225	6	33.929025	I-20 EB (Basic Analysis)	NE
9225	7	31.77251	I-20 EB (Basic Analysis)	NE
9225	8	31.565056	I-20 EB (Basic Analysis)	NE
9225	9	29.561536	I-20 EB (Basic Analysis)	NE
9225	10	29.618242	I-20 EB (Basic Analysis)	NE
9243	1	36.867171	I-20 WB (Basic Analysis)	SW
9243	2	35.051371	I-20 WB (Basic Analysis)	SW
9243	3	38.062191	I-20 WB (Basic Analysis)	SW
9243	4	34.770279	I-20 WB (Basic Analysis)	SW
9243	5	35.004311	I-20 WB (Basic Analysis)	SW
9243	6	35.962388	I-20 WB (Basic Analysis)	SW
9243	7	36.876816	I-20 WB (Basic Analysis)	SW
9243	8	37.862518	I-20 WB (Basic Analysis)	SW
9243	9	38.162918	I-20 WB (Basic Analysis)	SW
9243	10	36.608717	I-20 WB (Basic Analysis)	SW
9245	1	11.409735	CD ROAD I-20 WB TO I-20 (Basic Analysis)	NW
9245	2	10.902528	CD ROAD I-20 WB TO I-20 (Basic Analysis)	NW
9245	3	12.095672	CD ROAD I-20 WB TO I-20 (Basic Analysis)	NW
9245	4	11.536939	CD ROAD I-20 WB TO I-20 (Basic Analysis)	NW
9245	5	10.991088	CD ROAD I-20 WB TO I-20 (Basic Analysis)	NW
9245	6	10.574052	CD ROAD I-20 WB TO I-20 (Basic Analysis)	NW
9245	7	10.689985	CD ROAD I-20 WB TO I-20 (Basic Analysis)	NW
9245	8	11.264819	CD ROAD I-20 WB TO I-20 (Basic Analysis)	NW

RPA AM

ID	Run	Density	Name (Type)	Direction
9245	9	11.179479	CD ROAD I-20 WB TO I-20 (Basic Analysis)	NW
9245	10	11.173039	CD ROAD I-20 WB TO I-20 (Basic Analysis)	NW
9246	1	6.465011	I-126 NB (Diverge Analysis)	NW
9246	2	6.80045	I-126 NB (Diverge Analysis)	NW
9246	3	6.856824	I-126 NB (Diverge Analysis)	NW
9246	4	6.102646	I-126 NB (Diverge Analysis)	NW
9246	5	5.380482	I-126 NB (Diverge Analysis)	NW
9246	6	6.853101	I-126 NB (Diverge Analysis)	NW
9246	7	6.931785	I-126 NB (Diverge Analysis)	NW
9246	8	5.725098	I-126 NB (Diverge Analysis)	NW
9246	9	6.127821	I-126 NB (Diverge Analysis)	NW
9246	10	5.879812	I-126 NB (Diverge Analysis)	NW
9248	1	16.585013	I-26 WB (Basic Analysis)	NW
9248	2	16.827869	I-26 WB (Basic Analysis)	NW
9248	3	16.868233	I-26 WB (Basic Analysis)	NW
9248	4	15.819777	I-26 WB (Basic Analysis)	NW
9248	5	17.015939	I-26 WB (Basic Analysis)	NW
9248	6	16.554567	I-26 WB (Basic Analysis)	NW
9248	7	16.119247	I-26 WB (Basic Analysis)	NW
9248	8	16.48356	I-26 WB (Basic Analysis)	NW
9248	9	17.036563	I-26 WB (Basic Analysis)	NW
9248	10	16.546768	I-26 WB (Basic Analysis)	NW
9249	1	28.042624	I-26 EB (Basic Analysis)	SE
9249	2	29.000495	I-26 EB (Basic Analysis)	SE
9249	3	28.376622	I-26 EB (Basic Analysis)	SE
9249	4	28.256211	I-26 EB (Basic Analysis)	SE
9249	5	28.517794	I-26 EB (Basic Analysis)	SE
9249	6	28.484506	I-26 EB (Basic Analysis)	SE
9249	7	28.48519	I-26 EB (Basic Analysis)	SE
9249	8	27.785845	I-26 EB (Basic Analysis)	SE
9249	9	28.264737	I-26 EB (Basic Analysis)	SE
9249	10	28.33844	I-26 EB (Basic Analysis)	SE

RPA AM

ID	Run	Density	Name (Type)	Direction
2806	1	20.364017	I-20 EB (Basic Analysis)	NE
2806	2	19.34068	I-20 EB (Basic Analysis)	NE
2806	3	20.036881	I-20 EB (Basic Analysis)	NE
2806	4	19.118964	I-20 EB (Basic Analysis)	NE
2806	5	19.147074	I-20 EB (Basic Analysis)	NE
2806	6	19.057025	I-20 EB (Basic Analysis)	NE
2806	7	19.793904	I-20 EB (Basic Analysis)	NE
2806	8	19.570878	I-20 EB (Basic Analysis)	NE
2806	9	19.025684	I-20 EB (Basic Analysis)	NE
2806	10	19.523985	I-20 EB (Basic Analysis)	NE
2807	1	20.364017	I-20 EB (Basic Analysis)	NE
2807	2	19.34068	I-20 EB (Basic Analysis)	NE
2807	3	20.036881	I-20 EB (Basic Analysis)	NE
2807	4	19.118964	I-20 EB (Basic Analysis)	NE
2807	5	19.147074	I-20 EB (Basic Analysis)	NE
2807	6	19.057025	I-20 EB (Basic Analysis)	NE
2807	7	19.793904	I-20 EB (Basic Analysis)	NE
2807	8	19.570878	I-20 EB (Basic Analysis)	NE
2807	9	19.025684	I-20 EB (Basic Analysis)	NE
2807	10	19.523985	I-20 EB (Basic Analysis)	NE
2808	1	20.271454	I-20 EB (Diverge Analysis)	NE
2808	2	19.339286	I-20 EB (Diverge Analysis)	NE
2808	3	19.73568	I-20 EB (Diverge Analysis)	NE
2808	4	18.391301	I-20 EB (Diverge Analysis)	NE
2808	5	18.975512	I-20 EB (Diverge Analysis)	NE
2808	6	18.516842	I-20 EB (Diverge Analysis)	NE
2808	7	19.139606	I-20 EB (Diverge Analysis)	NE
2808	8	19.689219	I-20 EB (Diverge Analysis)	NE
2808	9	18.761993	I-20 EB (Diverge Analysis)	NE
2808	10	19.657587	I-20 EB (Diverge Analysis)	NE
2813	1	19.32405	I-20 WB (Merge Analysis)	S
2813	2	19.52454	I-20 WB (Merge Analysis)	S
2813	3	18.7475	I-20 WB (Merge Analysis)	S
2813	4	19.233433	I-20 WB (Merge Analysis)	S
2813	5	20.024065	I-20 WB (Merge Analysis)	S
2813	6	19.267414	I-20 WB (Merge Analysis)	S
2813	7	18.746367	I-20 WB (Merge Analysis)	S
2813	8	20.227953	I-20 WB (Merge Analysis)	S
2813	9	18.713519	I-20 WB (Merge Analysis)	S
2813	10	19.868884	I-20 WB (Merge Analysis)	S
2814	1	23.236886	I-20 WB (Basic Analysis)	S
2814	2	23.782904	I-20 WB (Basic Analysis)	S
2814	3	23.296673	I-20 WB (Basic Analysis)	S
2814	4	23.429035	I-20 WB (Basic Analysis)	S
2814	5	24.485506	I-20 WB (Basic Analysis)	S
2814	6	23.842751	I-20 WB (Basic Analysis)	S
2814	7	23.305241	I-20 WB (Basic Analysis)	S
2814	8	23.957645	I-20 WB (Basic Analysis)	S
2814	9	23.247343	I-20 WB (Basic Analysis)	S
2814	10	24.357661	I-20 WB (Basic Analysis)	S
2822	1	14.918182	I-20 WB (Merge Analysis)	SW
2822	2	16.260867	I-20 WB (Merge Analysis)	SW
2822	3	16.584964	I-20 WB (Merge Analysis)	SW
2822	4	16.701931	I-20 WB (Merge Analysis)	SW
2822	5	16.03668	I-20 WB (Merge Analysis)	SW
2822	6	15.987944	I-20 WB (Merge Analysis)	SW
2822	7	16.333972	I-20 WB (Merge Analysis)	SW
2822	8	16.217004	I-20 WB (Merge Analysis)	SW
2822	9	15.641916	I-20 WB (Merge Analysis)	SW
2822	10	16.372961	I-20 WB (Merge Analysis)	SW
2823	1	206.486314	I-20 WB (Basic Analysis)	SW
2823	2	265.482401	I-20 WB (Basic Analysis)	SW
2823	3	250.733378	I-20 WB (Basic Analysis)	SW
2823	4	300.88006	I-20 WB (Basic Analysis)	SW

RPA AM

ID	Run	Density	Name (Type)	Direction
2823	5	206.486311	I-20 WB (Basic Analysis)	SW
2823	6	169.613756	I-20 WB (Basic Analysis)	SW
2823	7	200.586709	I-20 WB (Basic Analysis)	SW
2823	8	312.67927	I-20 WB (Basic Analysis)	SW
2823	9	175.513368	I-20 WB (Basic Analysis)	SW
2823	10	157.81454	I-20 WB (Basic Analysis)	SW
2826	1	19.142161	I-20 EB (Basic Analysis)	NE
2826	2	17.710256	I-20 EB (Basic Analysis)	NE
2826	3	19.188616	I-20 EB (Basic Analysis)	NE
2826	4	15.835663	I-20 EB (Basic Analysis)	NE
2826	5	17.103609	I-20 EB (Basic Analysis)	NE
2826	6	17.406933	I-20 EB (Basic Analysis)	NE
2826	7	18.759591	I-20 EB (Basic Analysis)	NE
2826	8	19.716016	I-20 EB (Basic Analysis)	NE
2826	9	18.939945	I-20 EB (Basic Analysis)	NE
2826	10	20.440166	I-20 EB (Basic Analysis)	NE
2829	1	22.736066	I-20 EB (Merge Analysis)	NE
2829	2	23.098058	I-20 EB (Merge Analysis)	NE
2829	3	22.341842	I-20 EB (Merge Analysis)	NE
2829	4	21.69224	I-20 EB (Merge Analysis)	NE
2829	5	23.586499	I-20 EB (Merge Analysis)	NE
2829	6	23.593937	I-20 EB (Merge Analysis)	NE
2829	7	24.025352	I-20 EB (Merge Analysis)	NE
2829	8	21.622817	I-20 EB (Merge Analysis)	NE
2829	9	19.822775	I-20 EB (Merge Analysis)	NE
2829	10	23.053429	I-20 EB (Merge Analysis)	NE
2830	1	26.814925	I-20 EB (Basic Analysis)	NE
2830	2	22.339189	I-20 EB (Basic Analysis)	NE
2830	3	27.038712	I-20 EB (Basic Analysis)	NE
2830	4	26.551647	I-20 EB (Basic Analysis)	NE
2830	5	26.735942	I-20 EB (Basic Analysis)	NE
2830	6	23.905697	I-20 EB (Basic Analysis)	NE
2830	7	25.459041	I-20 EB (Basic Analysis)	NE
2830	8	22.707779	I-20 EB (Basic Analysis)	NE
2830	9	23.497615	I-20 EB (Basic Analysis)	NE
2830	10	20.272452	I-20 EB (Basic Analysis)	NE
2831	1	22.681355	I-20 WB (Basic Analysis)	SW
2831	2	24.110984	I-20 WB (Basic Analysis)	SW
2831	3	22.385569	I-20 WB (Basic Analysis)	SW
2831	4	22.535703	I-20 WB (Basic Analysis)	SW
2831	5	23.882422	I-20 WB (Basic Analysis)	SW
2831	6	23.08918	I-20 WB (Basic Analysis)	SW
2831	7	23.172089	I-20 WB (Basic Analysis)	SW
2831	8	23.889145	I-20 WB (Basic Analysis)	SW
2831	9	22.94801	I-20 WB (Basic Analysis)	SW
2831	10	23.353594	I-20 WB (Basic Analysis)	SW
2837	1	133.556309	I-20 WB (Merge Analysis)	SW
2837	2	119.193278	I-20 WB (Merge Analysis)	SW
2837	3	120.174013	I-20 WB (Merge Analysis)	SW
2837	4	124.353063	I-20 WB (Merge Analysis)	SW
2837	5	104.333099	I-20 WB (Merge Analysis)	SW
2837	6	106.990576	I-20 WB (Merge Analysis)	SW
2837	7	132.10705	I-20 WB (Merge Analysis)	SW
2837	8	127.369087	I-20 WB (Merge Analysis)	SW
2837	9	121.923067	I-20 WB (Merge Analysis)	SW
2837	10	106.253895	I-20 WB (Merge Analysis)	SW
2838	1	132.36433	I-20 WB (Diverge Analysis)	SW
2838	2	121.540899	I-20 WB (Diverge Analysis)	SW
2838	3	125.712914	I-20 WB (Diverge Analysis)	SW
2838	4	129.641872	I-20 WB (Diverge Analysis)	SW
2838	5	115.30919	I-20 WB (Diverge Analysis)	SW
2838	6	120.823014	I-20 WB (Diverge Analysis)	SW
2838	7	130.918534	I-20 WB (Diverge Analysis)	SW
2838	8	127.976826	I-20 WB (Diverge Analysis)	SW

RPA AM

ID	Run	Density	Name (Type)	Direction
2838	9	123.970189	I-20 WB (Diverge Analysis)	SW
2838	10	118.517757	I-20 WB (Diverge Analysis)	SW
2839	1	132.36433	I-20 WB (Diverge Analysis)	SW
2839	2	121.540899	I-20 WB (Diverge Analysis)	SW
2839	3	125.712914	I-20 WB (Diverge Analysis)	SW
2839	4	129.641872	I-20 WB (Diverge Analysis)	SW
2839	5	115.30919	I-20 WB (Diverge Analysis)	SW
2839	6	120.823014	I-20 WB (Diverge Analysis)	SW
2839	7	130.918534	I-20 WB (Diverge Analysis)	SW
2839	8	127.976826	I-20 WB (Diverge Analysis)	SW
2839	9	123.970189	I-20 WB (Diverge Analysis)	SW
2839	10	118.517757	I-20 WB (Diverge Analysis)	SW
2840	1	132.36433	I-20 WB (Diverge Analysis)	SW
2840	2	121.540899	I-20 WB (Diverge Analysis)	SW
2840	3	125.712914	I-20 WB (Diverge Analysis)	SW
2840	4	129.641872	I-20 WB (Diverge Analysis)	SW
2840	5	115.30919	I-20 WB (Diverge Analysis)	SW
2840	6	120.823014	I-20 WB (Diverge Analysis)	SW
2840	7	130.918534	I-20 WB (Diverge Analysis)	SW
2840	8	127.976826	I-20 WB (Diverge Analysis)	SW
2840	9	123.970189	I-20 WB (Diverge Analysis)	SW
2840	10	118.517757	I-20 WB (Diverge Analysis)	SW
2843	1	16.754672	I-20 EB (Basic Analysis)	NE
2843	2	16.145784	I-20 EB (Basic Analysis)	NE
2843	3	16.558727	I-20 EB (Basic Analysis)	NE
2843	4	16.101429	I-20 EB (Basic Analysis)	NE
2843	5	15.866464	I-20 EB (Basic Analysis)	NE
2843	6	16.499214	I-20 EB (Basic Analysis)	NE
2843	7	16.573606	I-20 EB (Basic Analysis)	NE
2843	8	16.484336	I-20 EB (Basic Analysis)	NE
2843	9	16.097499	I-20 EB (Basic Analysis)	NE
2843	10	16.002615	I-20 EB (Basic Analysis)	NE
2848	1	11.911568	I-20 EB (Basic Analysis)	NE
2848	2	10.762776	I-20 EB (Basic Analysis)	NE
2848	3	10.786783	I-20 EB (Basic Analysis)	NE
2848	4	10.342658	I-20 EB (Basic Analysis)	NE
2848	5	10.860215	I-20 EB (Basic Analysis)	NE
2848	6	11.000019	I-20 EB (Basic Analysis)	NE
2848	7	11.164535	I-20 EB (Basic Analysis)	NE
2848	8	11.146883	I-20 EB (Basic Analysis)	NE
2848	9	10.968951	I-20 EB (Basic Analysis)	NE
2848	10	10.855272	I-20 EB (Basic Analysis)	NE
2852	1	111.860026	I-20 WB (Merge Analysis)	SW
2852	2	97.411191	I-20 WB (Merge Analysis)	SW
2852	3	93.526113	I-20 WB (Merge Analysis)	SW
2852	4	91.490572	I-20 WB (Merge Analysis)	SW
2852	5	64.526666	I-20 WB (Merge Analysis)	SW
2852	6	81.474304	I-20 WB (Merge Analysis)	SW
2852	7	107.301115	I-20 WB (Merge Analysis)	SW
2852	8	105.114662	I-20 WB (Merge Analysis)	SW
2852	9	95.273872	I-20 WB (Merge Analysis)	SW
2852	10	72.233648	I-20 WB (Merge Analysis)	SW
2863	1	11.570043	I-20 EB (Basic Analysis)	NE
2863	2	10.890838	I-20 EB (Basic Analysis)	NE
2863	3	12.877415	I-20 EB (Basic Analysis)	NE
2863	4	12.045094	I-20 EB (Basic Analysis)	NE
2863	5	11.585747	I-20 EB (Basic Analysis)	NE
2863	6	11.393371	I-20 EB (Basic Analysis)	NE
2863	7	11.083214	I-20 EB (Basic Analysis)	NE
2863	8	13.101199	I-20 EB (Basic Analysis)	NE
2863	9	11.42478	I-20 EB (Basic Analysis)	NE
2863	10	9.838659	I-20 EB (Basic Analysis)	NE
4563	1	14.237334	I-126 SB (Merge Analysis)	E
4563	2	14.577706	I-126 SB (Merge Analysis)	E

RPA AM

ID	Run	Density	Name (Type)	Direction
4563	3	13.722178	I-126 SB (Merge Analysis)	E
4563	4	14.485714	I-126 SB (Merge Analysis)	E
4563	5	15.218585	I-126 SB (Merge Analysis)	E
4563	6	13.700713	I-126 SB (Merge Analysis)	E
4563	7	13.930694	I-126 SB (Merge Analysis)	E
4563	8	14.657432	I-126 SB (Merge Analysis)	E
4563	9	14.237334	I-126 SB (Merge Analysis)	E
4563	10	12.397489	I-126 SB (Merge Analysis)	E
4566	1	30.862155	I-126 NB (Basic Analysis)	W
4566	2	31.702993	I-126 NB (Basic Analysis)	W
4566	3	31.28852	I-126 NB (Basic Analysis)	W
4566	4	30.291405	I-126 NB (Basic Analysis)	W
4566	5	30.569136	I-126 NB (Basic Analysis)	W
4566	6	31.015884	I-126 NB (Basic Analysis)	W
4566	7	31.032871	I-126 NB (Basic Analysis)	W
4566	8	31.043063	I-126 NB (Basic Analysis)	W
4566	9	31.013336	I-126 NB (Basic Analysis)	W
4566	10	30.757687	I-126 NB (Basic Analysis)	W
4570	1	29.432238	I-126 NB (Basic Analysis)	W
4570	2	29.204035	I-126 NB (Basic Analysis)	W
4570	3	28.88669	I-126 NB (Basic Analysis)	W
4570	4	28.818942	I-126 NB (Basic Analysis)	W
4570	5	27.945353	I-126 NB (Basic Analysis)	W
4570	6	29.2076	I-126 NB (Basic Analysis)	W
4570	7	29.157681	I-126 NB (Basic Analysis)	W
4570	8	28.360159	I-126 NB (Basic Analysis)	W
4570	9	28.51586	I-126 NB (Basic Analysis)	W
4570	10	29.920735	I-126 NB (Basic Analysis)	W
4573	1	14.874929	I-126 SB (Basic Analysis)	E
4573	2	13.560279	I-126 SB (Basic Analysis)	E
4573	3	14.262124	I-126 SB (Basic Analysis)	E
4573	4	15.189188	I-126 SB (Basic Analysis)	E
4573	5	13.40053	I-126 SB (Basic Analysis)	E
4573	6	15.00587	I-126 SB (Basic Analysis)	E
4573	7	15.458927	I-126 SB (Basic Analysis)	E
4573	8	14.56067	I-126 SB (Basic Analysis)	E
4573	9	14.429729	I-126 SB (Basic Analysis)	E
4573	10	14.542338	I-126 SB (Basic Analysis)	E
4579	1	13.602256	I-126 SB (Diverge Analysis)	E
4579	2	14.497577	I-126 SB (Diverge Analysis)	E
4579	3	13.597901	I-126 SB (Diverge Analysis)	E
4579	4	14.993949	I-126 SB (Diverge Analysis)	E
4579	5	13.983753	I-126 SB (Diverge Analysis)	E
4579	6	23.285896	I-126 SB (Diverge Analysis)	E
4579	7	15.335563	I-126 SB (Diverge Analysis)	E
4579	8	19.344132	I-126 SB (Diverge Analysis)	E
4579	9	14.119864	I-126 SB (Diverge Analysis)	E
4579	10	19.67362	I-126 SB (Diverge Analysis)	E
4589	1	28.277117	I-126 NB (Merge Analysis)	NW
4589	2	30.021148	I-126 NB (Merge Analysis)	NW
4589	3	27.622458	I-126 NB (Merge Analysis)	NW
4589	4	29.128432	I-126 NB (Merge Analysis)	NW
4589	5	29.413066	I-126 NB (Merge Analysis)	NW
4589	6	29.467405	I-126 NB (Merge Analysis)	NW
4589	7	27.480141	I-126 NB (Merge Analysis)	NW
4589	8	28.582452	I-126 NB (Merge Analysis)	NW
4589	9	28.872261	I-126 NB (Merge Analysis)	NW
4589	10	28.403909	I-126 NB (Merge Analysis)	NW
4599	1	22.856195	I-126 NB (Basic Analysis)	NW
4599	2	24.014296	I-126 NB (Basic Analysis)	NW
4599	3	22.849986	I-126 NB (Basic Analysis)	NW
4599	4	23.736414	I-126 NB (Basic Analysis)	NW
4599	5	23.480266	I-126 NB (Basic Analysis)	NW
4599	6	22.520874	I-126 NB (Basic Analysis)	NW

RPA AM

ID	Run	Density	Name (Type)	Direction
4599	7	22.317507	I-126 NB (Basic Analysis)	NW
4599	8	21.982186	I-126 NB (Basic Analysis)	NW
4599	9	23.089057	I-126 NB (Basic Analysis)	NW
4599	10	23.284661	I-126 NB (Basic Analysis)	NW
4601	1	24.07842	I-126 NB (Basic Analysis)	NW
4601	2	26.099451	I-126 NB (Basic Analysis)	NW
4601	3	26.633698	I-126 NB (Basic Analysis)	NW
4601	4	24.890146	I-126 NB (Basic Analysis)	NW
4601	5	26.898751	I-126 NB (Basic Analysis)	NW
4601	6	27.143097	I-126 NB (Basic Analysis)	NW
4601	7	25.436818	I-126 NB (Basic Analysis)	NW
4601	8	25.345706	I-126 NB (Basic Analysis)	NW
4601	9	25.097218	I-126 NB (Basic Analysis)	NW
4601	10	25.113784	I-126 NB (Basic Analysis)	NW
4604	1	16.34284	I-26 WB (Basic Analysis)	NW
4604	2	16.17149	I-26 WB (Basic Analysis)	NW
4604	3	15.745622	I-26 WB (Basic Analysis)	NW
4604	4	16.160018	I-26 WB (Basic Analysis)	NW
4604	5	16.823913	I-26 WB (Basic Analysis)	NW
4604	6	16.158584	I-26 WB (Basic Analysis)	NW
4604	7	16.585886	I-26 WB (Basic Analysis)	NW
4604	8	15.882559	I-26 WB (Basic Analysis)	NW
4604	9	16.564377	I-26 WB (Basic Analysis)	NW
4604	10	15.929878	I-26 WB (Basic Analysis)	NW
4610	1	13.681684	I-26 EB (Basic Analysis)	SE
4610	2	14.599958	I-26 EB (Basic Analysis)	SE
4610	3	13.828882	I-26 EB (Basic Analysis)	SE
4610	4	14.224262	I-26 EB (Basic Analysis)	SE
4610	5	13.739022	I-26 EB (Basic Analysis)	SE
4610	6	14.229396	I-26 EB (Basic Analysis)	SE
4610	7	13.8169	I-26 EB (Basic Analysis)	SE
4610	8	14.013735	I-26 EB (Basic Analysis)	SE
4610	9	13.621778	I-26 EB (Basic Analysis)	SE
4610	10	14.197732	I-26 EB (Basic Analysis)	SE
4646	1	34.320072	I-26 WB (Basic Analysis)	NW
4646	2	35.663897	I-26 WB (Basic Analysis)	NW
4646	3	34.420691	I-26 WB (Basic Analysis)	NW
4646	4	34.038339	I-26 WB (Basic Analysis)	NW
4646	5	34.288768	I-26 WB (Basic Analysis)	NW
4646	6	34.807516	I-26 WB (Basic Analysis)	NW
4646	7	35.098194	I-26 WB (Basic Analysis)	NW
4646	8	34.049518	I-26 WB (Basic Analysis)	NW
4646	9	35.024406	I-26 WB (Basic Analysis)	NW
4646	10	34.608514	I-26 WB (Basic Analysis)	NW
4651	1	34.228205	I-26 WB (Basic Analysis)	NW
4651	2	33.512391	I-26 WB (Basic Analysis)	NW
4651	3	33.016092	I-26 WB (Basic Analysis)	NW
4651	4	32.69977	I-26 WB (Basic Analysis)	NW
4651	5	34.918114	I-26 WB (Basic Analysis)	NW
4651	6	34.414998	I-26 WB (Basic Analysis)	NW
4651	7	32.924741	I-26 WB (Basic Analysis)	NW
4651	8	34.247293	I-26 WB (Basic Analysis)	NW
4651	9	34.094586	I-26 WB (Basic Analysis)	NW
4651	10	34.469537	I-26 WB (Basic Analysis)	NW
4654	1	38.927944	I-26 WB (Merge Analysis)	NW
4654	2	40.632532	I-26 WB (Merge Analysis)	NW
4654	3	40.914462	I-26 WB (Merge Analysis)	NW
4654	4	40.417832	I-26 WB (Merge Analysis)	NW
4654	5	39.392043	I-26 WB (Merge Analysis)	NW
4654	6	40.758317	I-26 WB (Merge Analysis)	NW
4654	7	40.302892	I-26 WB (Merge Analysis)	NW
4654	8	37.618057	I-26 WB (Merge Analysis)	NW
4654	9	39.882167	I-26 WB (Merge Analysis)	NW
4654	10	37.670105	I-26 WB (Merge Analysis)	NW

RPA AM

ID	Run	Density	Name (Type)	Direction
4677	1	45.422006	I-26 WB (Basic Analysis)	NW
4677	2	46.236181	I-26 WB (Basic Analysis)	NW
4677	3	45.366349	I-26 WB (Basic Analysis)	NW
4677	4	53.399701	I-26 WB (Basic Analysis)	NW
4677	5	46.89025	I-26 WB (Basic Analysis)	NW
4677	6	49.427061	I-26 WB (Basic Analysis)	NW
4677	7	45.989272	I-26 WB (Basic Analysis)	NW
4677	8	44.138725	I-26 WB (Basic Analysis)	NW
4677	9	46.319976	I-26 WB (Basic Analysis)	NW
4677	10	44.510196	I-26 WB (Basic Analysis)	NW
4687	1	26.456789	I-26 EB (Basic Analysis)	SE
4687	2	26.023478	I-26 EB (Basic Analysis)	SE
4687	3	26.028998	I-26 EB (Basic Analysis)	SE
4687	4	27.523046	I-26 EB (Basic Analysis)	SE
4687	5	25.632487	I-26 EB (Basic Analysis)	SE
4687	6	25.94988	I-26 EB (Basic Analysis)	SE
4687	7	26.502788	I-26 EB (Basic Analysis)	SE
4687	8	26.181715	I-26 EB (Basic Analysis)	SE
4687	9	26.095237	I-26 EB (Basic Analysis)	SE
4687	10	27.092495	I-26 EB (Basic Analysis)	SE
4701	1	34.195198	I-26 WB (Weaving Analysis)	NW
4701	2	34.662097	I-26 WB (Weaving Analysis)	NW
4701	3	35.535553	I-26 WB (Weaving Analysis)	NW
4701	4	32.892024	I-26 WB (Weaving Analysis)	NW
4701	5	34.473143	I-26 WB (Weaving Analysis)	NW
4701	6	33.831309	I-26 WB (Weaving Analysis)	NW
4701	7	36.001233	I-26 WB (Weaving Analysis)	NW
4701	8	33.856909	I-26 WB (Weaving Analysis)	NW
4701	9	33.895309	I-26 WB (Weaving Analysis)	NW
4701	10	34.595658	I-26 WB (Weaving Analysis)	NW
4712	1	32.521122	I-26 WB (Basic Analysis)	NW
4712	2	33.85445	I-26 WB (Basic Analysis)	NW
4712	3	34.635372	I-26 WB (Basic Analysis)	NW
4712	4	33.308654	I-26 WB (Basic Analysis)	NW
4712	5	33.648596	I-26 WB (Basic Analysis)	NW
4712	6	33.597605	I-26 WB (Basic Analysis)	NW
4712	7	34.865777	I-26 WB (Basic Analysis)	NW
4712	8	33.428578	I-26 WB (Basic Analysis)	NW
4712	9	33.488068	I-26 WB (Basic Analysis)	NW
4712	10	34.695807	I-26 WB (Basic Analysis)	NW
4714	1	23.321143	I-26 EB (Basic Analysis)	SE
4714	2	22.150166	I-26 EB (Basic Analysis)	SE
4714	3	22.449416	I-26 EB (Basic Analysis)	SE
4714	4	22.886905	I-26 EB (Basic Analysis)	SE
4714	5	22.124957	I-26 EB (Basic Analysis)	SE
4714	6	22.142034	I-26 EB (Basic Analysis)	SE
4714	7	22.043639	I-26 EB (Basic Analysis)	SE
4714	8	21.941179	I-26 EB (Basic Analysis)	SE
4714	9	22.500646	I-26 EB (Basic Analysis)	SE
4714	10	22.747852	I-26 EB (Basic Analysis)	SE
4720	1	19.621838	I-26 EB (Merge Analysis)	SE
4720	2	18.413497	I-26 EB (Merge Analysis)	SE
4720	3	18.931863	I-26 EB (Merge Analysis)	SE
4720	4	19.644837	I-26 EB (Merge Analysis)	SE
4720	5	18.954862	I-26 EB (Merge Analysis)	SE
4720	6	19.096395	I-26 EB (Merge Analysis)	SE
4720	7	18.00128	I-26 EB (Merge Analysis)	SE
4720	8	18.00305	I-26 EB (Merge Analysis)	SE
4720	9	18.749638	I-26 EB (Merge Analysis)	SE
4720	10	19.911982	I-26 EB (Merge Analysis)	SE
4725	1	37.198134	I-26 WB (Merge Analysis)	NW
4725	2	36.00321	I-26 WB (Merge Analysis)	NW
4725	3	40.091322	I-26 WB (Merge Analysis)	NW
4725	4	35.46986	I-26 WB (Merge Analysis)	NW

RPA AM

ID	Run	Density	Name (Type)	Direction
4725	5	38.13252	I-26 WB (Merge Analysis)	NW
4725	6	36.261019	I-26 WB (Merge Analysis)	NW
4725	7	43.191849	I-26 WB (Merge Analysis)	NW
4725	8	37.818785	I-26 WB (Merge Analysis)	NW
4725	9	37.933367	I-26 WB (Merge Analysis)	NW
4725	10	40.110419	I-26 WB (Merge Analysis)	NW
4727	1	40.911476	I-26 WB (Basic Analysis)	NW
4727	2	39.298155	I-26 WB (Basic Analysis)	NW
4727	3	43.881797	I-26 WB (Basic Analysis)	NW
4727	4	39.657076	I-26 WB (Basic Analysis)	NW
4727	5	42.070751	I-26 WB (Basic Analysis)	NW
4727	6	40.922482	I-26 WB (Basic Analysis)	NW
4727	7	47.336353	I-26 WB (Basic Analysis)	NW
4727	8	42.832021	I-26 WB (Basic Analysis)	NW
4727	9	40.94237	I-26 WB (Basic Analysis)	NW
4727	10	46.76004	I-26 WB (Basic Analysis)	NW
4728	1	30.857519	I-26 WB (Diverge Analysis)	NW
4728	2	30.955882	I-26 WB (Diverge Analysis)	NW
4728	3	32.206128	I-26 WB (Diverge Analysis)	NW
4728	4	31.046479	I-26 WB (Diverge Analysis)	NW
4728	5	32.28896	I-26 WB (Diverge Analysis)	NW
4728	6	30.508071	I-26 WB (Diverge Analysis)	NW
4728	7	33.345068	I-26 WB (Diverge Analysis)	NW
4728	8	31.766083	I-26 WB (Diverge Analysis)	NW
4728	9	32.938673	I-26 WB (Diverge Analysis)	NW
4728	10	32.244955	I-26 WB (Diverge Analysis)	NW
4729	1	30.857519	I-26 WB (Diverge Analysis)	NW
4729	2	30.955882	I-26 WB (Diverge Analysis)	NW
4729	3	32.206128	I-26 WB (Diverge Analysis)	NW
4729	4	31.046479	I-26 WB (Diverge Analysis)	NW
4729	5	32.28896	I-26 WB (Diverge Analysis)	NW
4729	6	30.508071	I-26 WB (Diverge Analysis)	NW
4729	7	33.345068	I-26 WB (Diverge Analysis)	NW
4729	8	31.766083	I-26 WB (Diverge Analysis)	NW
4729	9	32.938673	I-26 WB (Diverge Analysis)	NW
4729	10	32.244955	I-26 WB (Diverge Analysis)	NW
4730	1	30.857519	I-26 WB (Diverge Analysis)	NW
4730	2	30.955882	I-26 WB (Diverge Analysis)	NW
4730	3	32.206128	I-26 WB (Diverge Analysis)	NW
4730	4	31.046479	I-26 WB (Diverge Analysis)	NW
4730	5	32.28896	I-26 WB (Diverge Analysis)	NW
4730	6	30.508071	I-26 WB (Diverge Analysis)	NW
4730	7	33.345068	I-26 WB (Diverge Analysis)	NW
4730	8	31.766083	I-26 WB (Diverge Analysis)	NW
4730	9	32.938673	I-26 WB (Diverge Analysis)	NW
4730	10	32.244955	I-26 WB (Diverge Analysis)	NW
4732	1	31.939867	I-26 WB (Basic Analysis)	NW
4732	2	33.281323	I-26 WB (Basic Analysis)	NW
4732	3	32.62379	I-26 WB (Basic Analysis)	NW
4732	4	30.244353	I-26 WB (Basic Analysis)	NW
4732	5	32.234547	I-26 WB (Basic Analysis)	NW
4732	6	32.476449	I-26 WB (Basic Analysis)	NW
4732	7	31.280134	I-26 WB (Basic Analysis)	NW
4732	8	30.686374	I-26 WB (Basic Analysis)	NW
4732	9	31.937668	I-26 WB (Basic Analysis)	NW
4732	10	30.734755	I-26 WB (Basic Analysis)	NW
4733	1	20.365008	I-26 EB (Basic Analysis)	SE
4733	2	20.861071	I-26 EB (Basic Analysis)	SE
4733	3	21.765006	I-26 EB (Basic Analysis)	SE
4733	4	21.53351	I-26 EB (Basic Analysis)	SE
4733	5	20.534772	I-26 EB (Basic Analysis)	SE
4733	6	21.008787	I-26 EB (Basic Analysis)	SE
4733	7	19.99682	I-26 EB (Basic Analysis)	SE
4733	8	21.559967	I-26 EB (Basic Analysis)	SE

RPA AM

ID	Run	Density	Name (Type)	Direction
4733	9	20.616346	I-26 EB (Basic Analysis)	SE
4733	10	19.855718	I-26 EB (Basic Analysis)	SE
4736	1	22.686767	I-26 EB (Basic Analysis)	SE
4736	2	24.064041	I-26 EB (Basic Analysis)	SE
4736	3	20.837649	I-26 EB (Basic Analysis)	SE
4736	4	24.663411	I-26 EB (Basic Analysis)	SE
4736	5	27.800535	I-26 EB (Basic Analysis)	SE
4736	6	23.337147	I-26 EB (Basic Analysis)	SE
4736	7	27.915308	I-26 EB (Basic Analysis)	SE
4736	8	23.668713	I-26 EB (Basic Analysis)	SE
4736	9	20.824897	I-26 EB (Basic Analysis)	SE
4736	10	23.566692	I-26 EB (Basic Analysis)	SE
4737	1	16.542313	I-26 EB (Diverge Analysis)	SE
4737	2	18.738499	I-26 EB (Diverge Analysis)	SE
4737	3	16.674999	I-26 EB (Diverge Analysis)	SE
4737	4	16.681862	I-26 EB (Diverge Analysis)	SE
4737	5	18.260371	I-26 EB (Diverge Analysis)	SE
4737	6	17.013578	I-26 EB (Diverge Analysis)	SE
4737	7	18.045328	I-26 EB (Diverge Analysis)	SE
4737	8	17.754791	I-26 EB (Diverge Analysis)	SE
4737	9	17.789106	I-26 EB (Diverge Analysis)	SE
4737	10	15.757634	I-26 EB (Diverge Analysis)	SE
4739	1	29.324331	I-26 WB (Weaving Analysis)	NW
4739	2	29.028098	I-26 WB (Weaving Analysis)	NW
4739	3	29.402428	I-26 WB (Weaving Analysis)	NW
4739	4	28.519117	I-26 WB (Weaving Analysis)	NW
4739	5	30.078377	I-26 WB (Weaving Analysis)	NW
4739	6	28.884021	I-26 WB (Weaving Analysis)	NW
4739	7	28.733212	I-26 WB (Weaving Analysis)	NW
4739	8	28.87325	I-26 WB (Weaving Analysis)	NW
4739	9	27.941463	I-26 WB (Weaving Analysis)	NW
4739	10	30.171287	I-26 WB (Weaving Analysis)	NW
4741	1	40.516285	I-26 WB (Basic Analysis)	NW
4741	2	37.06332	I-26 WB (Basic Analysis)	NW
4741	3	39.260662	I-26 WB (Basic Analysis)	NW
4741	4	37.040898	I-26 WB (Basic Analysis)	NW
4741	5	40.493863	I-26 WB (Basic Analysis)	NW
4741	6	35.49379	I-26 WB (Basic Analysis)	NW
4741	7	32.152935	I-26 WB (Basic Analysis)	NW
4741	8	33.924261	I-26 WB (Basic Analysis)	NW
4741	9	35.448947	I-26 WB (Basic Analysis)	NW
4741	10	36.659727	I-26 WB (Basic Analysis)	NW
4742	1	23.175964	I-26 WB (Diverge Analysis)	NW
4742	2	23.647485	I-26 WB (Diverge Analysis)	NW
4742	3	24.685783	I-26 WB (Diverge Analysis)	NW
4742	4	23.183108	I-26 WB (Diverge Analysis)	NW
4742	5	25.640732	I-26 WB (Diverge Analysis)	NW
4742	6	24.400013	I-26 WB (Diverge Analysis)	NW
4742	7	24.504795	I-26 WB (Diverge Analysis)	NW
4742	8	23.711783	I-26 WB (Diverge Analysis)	NW
4742	9	25.82172	I-26 WB (Diverge Analysis)	NW
4742	10	24.750082	I-26 WB (Diverge Analysis)	NW
4745	1	18.73346	I-26 EB (Basic Analysis)	SE
4745	2	17.082429	I-26 EB (Basic Analysis)	SE
4745	3	15.095786	I-26 EB (Basic Analysis)	SE
4745	4	17.805459	I-26 EB (Basic Analysis)	SE
4745	5	16.746817	I-26 EB (Basic Analysis)	SE
4745	6	17.210818	I-26 EB (Basic Analysis)	SE
4745	7	15.712952	I-26 EB (Basic Analysis)	SE
4745	8	17.345964	I-26 EB (Basic Analysis)	SE
4745	9	14.784951	I-26 EB (Basic Analysis)	SE
4745	10	19.030781	I-26 EB (Basic Analysis)	SE
4753	1	26.548777	I-26 WB (Basic Analysis)	NW
4753	2	27.318057	I-26 WB (Basic Analysis)	NW

RPA AM

ID	Run	Density	Name (Type)	Direction
4753	3	28.078742	I-26 WB (Basic Analysis)	NW
4753	4	27.333099	I-26 WB (Basic Analysis)	NW
4753	5	25.57106	I-26 WB (Basic Analysis)	NW
4753	6	25.968593	I-26 WB (Basic Analysis)	NW
4753	7	27.823032	I-26 WB (Basic Analysis)	NW
4753	8	26.952756	I-26 WB (Basic Analysis)	NW
4753	9	26.602497	I-26 WB (Basic Analysis)	NW
4753	10	25.663459	I-26 WB (Basic Analysis)	NW
4755	1	17.357793	I-26 EB (Basic Analysis)	SE
4755	2	17.439021	I-26 EB (Basic Analysis)	SE
4755	3	19.744646	I-26 EB (Basic Analysis)	SE
4755	4	18.432502	I-26 EB (Basic Analysis)	SE
4755	5	20.13204	I-26 EB (Basic Analysis)	SE
4755	6	21.950297	I-26 EB (Basic Analysis)	SE
4755	7	17.813919	I-26 EB (Basic Analysis)	SE
4755	8	17.670208	I-26 EB (Basic Analysis)	SE
4755	9	20.525684	I-26 EB (Basic Analysis)	SE
4755	10	17.601477	I-26 EB (Basic Analysis)	SE
4756	1	12.65462	I-26 EB (Diverge Analysis)	SE
4756	2	14.266116	I-26 EB (Diverge Analysis)	SE
4756	3	12.648373	I-26 EB (Diverge Analysis)	SE
4756	4	12.4714	I-26 EB (Diverge Analysis)	SE
4756	5	13.000238	I-26 EB (Diverge Analysis)	SE
4756	6	13.853873	I-26 EB (Diverge Analysis)	SE
4756	7	13.325035	I-26 EB (Diverge Analysis)	SE
4756	8	13.699802	I-26 EB (Diverge Analysis)	SE
4756	9	13.868447	I-26 EB (Diverge Analysis)	SE
4756	10	11.413726	I-26 EB (Diverge Analysis)	SE
4760	1	17.170804	I-26 WB (Merge Analysis)	NW
4760	2	17.24185	I-26 WB (Merge Analysis)	NW
4760	3	16.08144	I-26 WB (Merge Analysis)	NW
4760	4	15.911227	I-26 WB (Merge Analysis)	NW
4760	5	15.81206	I-26 WB (Merge Analysis)	NW
4760	6	15.718812	I-26 WB (Merge Analysis)	NW
4760	7	15.897906	I-26 WB (Merge Analysis)	NW
4760	8	14.990596	I-26 WB (Merge Analysis)	NW
4760	9	15.743974	I-26 WB (Merge Analysis)	NW
4760	10	16.626122	I-26 WB (Merge Analysis)	NW
4761	1	28.109286	I-26 WB (Basic Analysis)	NW
4761	2	28.249428	I-26 WB (Basic Analysis)	NW
4761	3	28.347983	I-26 WB (Basic Analysis)	NW
4761	4	27.695762	I-26 WB (Basic Analysis)	NW
4761	5	27.970469	I-26 WB (Basic Analysis)	NW
4761	6	28.257832	I-26 WB (Basic Analysis)	NW
4761	7	27.867198	I-26 WB (Basic Analysis)	NW
4761	8	27.406342	I-26 WB (Basic Analysis)	NW
4761	9	28.213458	I-26 WB (Basic Analysis)	NW
4761	10	28.059986	I-26 WB (Basic Analysis)	NW
4762	1	28.109286	I-26 WB (Basic Analysis)	NW
4762	2	28.249428	I-26 WB (Basic Analysis)	NW
4762	3	28.347983	I-26 WB (Basic Analysis)	NW
4762	4	27.695762	I-26 WB (Basic Analysis)	NW
4762	5	27.970469	I-26 WB (Basic Analysis)	NW
4762	6	28.257832	I-26 WB (Basic Analysis)	NW
4762	7	27.867198	I-26 WB (Basic Analysis)	NW
4762	8	27.406342	I-26 WB (Basic Analysis)	NW
4762	9	28.213458	I-26 WB (Basic Analysis)	NW
4762	10	28.059986	I-26 WB (Basic Analysis)	NW
4763	1	28.109286	I-26 WB (Basic Analysis)	NW
4763	2	28.249428	I-26 WB (Basic Analysis)	NW
4763	3	28.347983	I-26 WB (Basic Analysis)	NW
4763	4	27.695762	I-26 WB (Basic Analysis)	NW
4763	5	27.970469	I-26 WB (Basic Analysis)	NW
4763	6	28.257832	I-26 WB (Basic Analysis)	NW

RPA AM

ID	Run	Density	Name (Type)	Direction
4763	7	27.867198	I-26 WB (Basic Analysis)	NW
4763	8	27.406342	I-26 WB (Basic Analysis)	NW
4763	9	28.213458	I-26 WB (Basic Analysis)	NW
4763	10	28.059986	I-26 WB (Basic Analysis)	NW
4764	1	28.109286	I-26 WB (Basic Analysis)	NW
4764	2	28.249428	I-26 WB (Basic Analysis)	NW
4764	3	28.347983	I-26 WB (Basic Analysis)	NW
4764	4	27.695762	I-26 WB (Basic Analysis)	NW
4764	5	27.970469	I-26 WB (Basic Analysis)	NW
4764	6	28.257832	I-26 WB (Basic Analysis)	NW
4764	7	27.867198	I-26 WB (Basic Analysis)	NW
4764	8	27.406342	I-26 WB (Basic Analysis)	NW
4764	9	28.213458	I-26 WB (Basic Analysis)	NW
4764	10	28.059986	I-26 WB (Basic Analysis)	NW
4769	1	16.366581	I-26 EB (Basic Analysis)	SE
4769	2	17.064354	I-26 EB (Basic Analysis)	SE
4769	3	16.480922	I-26 EB (Basic Analysis)	SE
4769	4	16.844498	I-26 EB (Basic Analysis)	SE
4769	5	16.793503	I-26 EB (Basic Analysis)	SE
4769	6	16.778019	I-26 EB (Basic Analysis)	SE
4769	7	17.034505	I-26 EB (Basic Analysis)	SE
4769	8	16.734856	I-26 EB (Basic Analysis)	SE
4769	9	17.060276	I-26 EB (Basic Analysis)	SE
4769	10	16.959894	I-26 EB (Basic Analysis)	SE
6079	1	17.434838	CD ROAD I-20 WB TO I-20 (Basic Analysis)	NW
6079	2	19.271967	CD ROAD I-20 WB TO I-20 (Basic Analysis)	NW
6079	3	17.769749	CD ROAD I-20 WB TO I-20 (Basic Analysis)	NW
6079	4	17.727478	CD ROAD I-20 WB TO I-20 (Basic Analysis)	NW
6079	5	17.737233	CD ROAD I-20 WB TO I-20 (Basic Analysis)	NW
6079	6	17.571404	CD ROAD I-20 WB TO I-20 (Basic Analysis)	NW
6079	7	17.269009	CD ROAD I-20 WB TO I-20 (Basic Analysis)	NW
6079	8	17.311279	CD ROAD I-20 WB TO I-20 (Basic Analysis)	NW
6079	9	17.386065	CD ROAD I-20 WB TO I-20 (Basic Analysis)	NW
6079	10	17.025143	CD ROAD I-20 WB TO I-20 (Basic Analysis)	NW
6149	1	24.460365	I-26 EB (Merge Analysis)	S
6149	2	25.212827	I-26 EB (Merge Analysis)	S
6149	3	26.881728	I-26 EB (Merge Analysis)	S
6149	4	25.554576	I-26 EB (Merge Analysis)	S
6149	5	25.097888	I-26 EB (Merge Analysis)	S
6149	6	24.769932	I-26 EB (Merge Analysis)	S
6149	7	25.723152	I-26 EB (Merge Analysis)	S
6149	8	25.680242	I-26 EB (Merge Analysis)	S
6149	9	26.539979	I-26 EB (Merge Analysis)	S
6149	10	25.571433	I-26 EB (Merge Analysis)	S
6150	1	24.460365	I-26 EB (Merge Analysis)	S
6150	2	25.212827	I-26 EB (Merge Analysis)	S
6150	3	26.881728	I-26 EB (Merge Analysis)	S
6150	4	25.554576	I-26 EB (Merge Analysis)	S
6150	5	25.097888	I-26 EB (Merge Analysis)	S
6150	6	24.769932	I-26 EB (Merge Analysis)	S
6150	7	25.723152	I-26 EB (Merge Analysis)	S
6150	8	25.680242	I-26 EB (Merge Analysis)	S
6150	9	26.539979	I-26 EB (Merge Analysis)	S
6150	10	25.571433	I-26 EB (Merge Analysis)	S
6151	1	24.460365	I-26 EB (Merge Analysis)	S
6151	2	25.212827	I-26 EB (Merge Analysis)	S
6151	3	26.881728	I-26 EB (Merge Analysis)	S
6151	4	25.554576	I-26 EB (Merge Analysis)	S
6151	5	25.097888	I-26 EB (Merge Analysis)	S
6151	6	24.769932	I-26 EB (Merge Analysis)	S
6151	7	25.723152	I-26 EB (Merge Analysis)	S
6151	8	25.680242	I-26 EB (Merge Analysis)	S
6151	9	26.539979	I-26 EB (Merge Analysis)	S
6151	10	25.571433	I-26 EB (Merge Analysis)	S

RPA AM

ID	Run	Density	Name (Type)	Direction
6152	1	28.001763	I-26 EB (Basic Analysis)	S
6152	2	28.628707	I-26 EB (Basic Analysis)	S
6152	3	29.28375	I-26 EB (Basic Analysis)	S
6152	4	29.494488	I-26 EB (Basic Analysis)	S
6152	5	28.809591	I-26 EB (Basic Analysis)	S
6152	6	28.848226	I-26 EB (Basic Analysis)	S
6152	7	29.076525	I-26 EB (Basic Analysis)	S
6152	8	28.393384	I-26 EB (Basic Analysis)	S
6152	9	30.110896	I-26 EB (Basic Analysis)	S
6152	10	28.10362	I-26 EB (Basic Analysis)	S
6159	1	33.025391	I-26 WB (Diverge Analysis)	N
6159	2	32.338997	I-26 WB (Diverge Analysis)	N
6159	3	32.943824	I-26 WB (Diverge Analysis)	N
6159	4	32.800697	I-26 WB (Diverge Analysis)	N
6159	5	32.249735	I-26 WB (Diverge Analysis)	N
6159	6	32.163551	I-26 WB (Diverge Analysis)	N
6159	7	32.648336	I-26 WB (Diverge Analysis)	N
6159	8	31.935779	I-26 WB (Diverge Analysis)	N
6159	9	33.223921	I-26 WB (Diverge Analysis)	N
6159	10	32.128154	I-26 WB (Diverge Analysis)	N
6160	1	33.025391	I-26 WB (Diverge Analysis)	N
6160	2	32.338997	I-26 WB (Diverge Analysis)	N
6160	3	32.943824	I-26 WB (Diverge Analysis)	N
6160	4	32.800697	I-26 WB (Diverge Analysis)	N
6160	5	32.249735	I-26 WB (Diverge Analysis)	N
6160	6	32.163551	I-26 WB (Diverge Analysis)	N
6160	7	32.648336	I-26 WB (Diverge Analysis)	N
6160	8	31.935779	I-26 WB (Diverge Analysis)	N
6160	9	33.223921	I-26 WB (Diverge Analysis)	N
6160	10	32.128154	I-26 WB (Diverge Analysis)	N
6165	1	25.091987	I-26 WB (Basic Analysis)	N
6165	2	26.284505	I-26 WB (Basic Analysis)	N
6165	3	24.869247	I-26 WB (Basic Analysis)	N
6165	4	24.97205	I-26 WB (Basic Analysis)	N
6165	5	25.744216	I-26 WB (Basic Analysis)	N
6165	6	25.603719	I-26 WB (Basic Analysis)	N
6165	7	26.270797	I-26 WB (Basic Analysis)	N
6165	8	24.543703	I-26 WB (Basic Analysis)	N
6165	9	25.363844	I-26 WB (Basic Analysis)	N
6165	10	25.211924	I-26 WB (Basic Analysis)	N
6178	1	24.017436	I-26 EB (Basic Analysis)	S
6178	2	24.954782	I-26 EB (Basic Analysis)	S
6178	3	24.178497	I-26 EB (Basic Analysis)	S
6178	4	24.800976	I-26 EB (Basic Analysis)	S
6178	5	24.607993	I-26 EB (Basic Analysis)	S
6178	6	24.682961	I-26 EB (Basic Analysis)	S
6178	7	24.724073	I-26 EB (Basic Analysis)	S
6178	8	24.547535	I-26 EB (Basic Analysis)	S
6178	9	25.460214	I-26 EB (Basic Analysis)	S
6178	10	24.249596	I-26 EB (Basic Analysis)	S
6207	1	11.753813	I-20 EB (Basic Analysis)	E
6207	2	10.622812	I-20 EB (Basic Analysis)	E
6207	3	10.823741	I-20 EB (Basic Analysis)	E
6207	4	10.534776	I-20 EB (Basic Analysis)	E
6207	5	10.940259	I-20 EB (Basic Analysis)	E
6207	6	11.144295	I-20 EB (Basic Analysis)	E
6207	7	11.025705	I-20 EB (Basic Analysis)	E
6207	8	10.947509	I-20 EB (Basic Analysis)	E
6207	9	10.882259	I-20 EB (Basic Analysis)	E
6207	10	10.642491	I-20 EB (Basic Analysis)	E
6216	1	11.570043	I-20 EB (Basic Analysis)	NE
6216	2	10.890838	I-20 EB (Basic Analysis)	NE
6216	3	12.877415	I-20 EB (Basic Analysis)	NE
6216	4	12.045094	I-20 EB (Basic Analysis)	NE

RPA AM

ID	Run	Density	Name (Type)	Direction
6216	5	11.585747	I-20 EB (Basic Analysis)	NE
6216	6	11.393371	I-20 EB (Basic Analysis)	NE
6216	7	11.083214	I-20 EB (Basic Analysis)	NE
6216	8	13.101199	I-20 EB (Basic Analysis)	NE
6216	9	11.42478	I-20 EB (Basic Analysis)	NE
6216	10	9.838659	I-20 EB (Basic Analysis)	NE
6223	1	19.233523	I-26 EB (Basic Analysis)	SE
6223	2	19.963786	I-26 EB (Basic Analysis)	SE
6223	3	20.45446	I-26 EB (Basic Analysis)	SE
6223	4	20.94867	I-26 EB (Basic Analysis)	SE
6223	5	19.951409	I-26 EB (Basic Analysis)	SE
6223	6	20.632164	I-26 EB (Basic Analysis)	SE
6223	7	21.179419	I-26 EB (Basic Analysis)	SE
6223	8	20.698471	I-26 EB (Basic Analysis)	SE
6223	9	21.762039	I-26 EB (Basic Analysis)	SE
6223	10	19.862999	I-26 EB (Basic Analysis)	SE
6234	1	16.464442	I-20 WB (Basic Analysis)	SW
6234	2	17.025059	I-20 WB (Basic Analysis)	SW
6234	3	16.433531	I-20 WB (Basic Analysis)	SW
6234	4	16.441961	I-20 WB (Basic Analysis)	SW
6234	5	17.987522	I-20 WB (Basic Analysis)	SW
6234	6	16.588087	I-20 WB (Basic Analysis)	SW
6234	7	15.978293	I-20 WB (Basic Analysis)	SW
6234	8	17.324336	I-20 WB (Basic Analysis)	SW
6234	9	16.588087	I-20 WB (Basic Analysis)	SW
6234	10	16.062596	I-20 WB (Basic Analysis)	SW
6238	1	19.056884	I-20 EB (Merge Analysis)	NE
6238	2	19.348262	I-20 EB (Merge Analysis)	NE
6238	3	19.356084	I-20 EB (Merge Analysis)	NE
6238	4	19.889951	I-20 EB (Merge Analysis)	NE
6238	5	19.291551	I-20 EB (Merge Analysis)	NE
6238	6	20.627195	I-20 EB (Merge Analysis)	NE
6238	7	20.488351	I-20 EB (Merge Analysis)	NE
6238	8	19.790218	I-20 EB (Merge Analysis)	NE
6238	9	20.241951	I-20 EB (Merge Analysis)	NE
6238	10	19.995551	I-20 EB (Merge Analysis)	NE
6241	1	25.496375	I-20 EB (Basic Analysis)	NE
6241	2	24.228309	I-20 EB (Basic Analysis)	NE
6241	3	22.765156	I-20 EB (Basic Analysis)	NE
6241	4	22.037332	I-20 EB (Basic Analysis)	NE
6241	5	25.143717	I-20 EB (Basic Analysis)	NE
6241	6	23.462968	I-20 EB (Basic Analysis)	NE
6241	7	22.825183	I-20 EB (Basic Analysis)	NE
6241	8	21.92103	I-20 EB (Basic Analysis)	NE
6241	9	24.033222	I-20 EB (Basic Analysis)	NE
6241	10	24.168282	I-20 EB (Basic Analysis)	NE
6242	1	35.225595	I-20 EB (Merge Analysis)	NE
6242	2	36.500664	I-20 EB (Merge Analysis)	NE
6242	3	31.879277	I-20 EB (Merge Analysis)	NE
6242	4	34.101977	I-20 EB (Merge Analysis)	NE
6242	5	34.546178	I-20 EB (Merge Analysis)	NE
6242	6	34.230583	I-20 EB (Merge Analysis)	NE
6242	7	34.874464	I-20 EB (Merge Analysis)	NE
6242	8	33.807535	I-20 EB (Merge Analysis)	NE
6242	9	34.261043	I-20 EB (Merge Analysis)	NE
6242	10	32.732144	I-20 EB (Merge Analysis)	NE
6246	1	41.36086	I-20 WB (Merge Analysis)	SW
6246	2	40.564057	I-20 WB (Merge Analysis)	SW
6246	3	40.404696	I-20 WB (Merge Analysis)	SW
6246	4	41.746432	I-20 WB (Merge Analysis)	SW
6246	5	45.741255	I-20 WB (Merge Analysis)	SW
6246	6	41.493886	I-20 WB (Merge Analysis)	SW
6246	7	41.199474	I-20 WB (Merge Analysis)	SW
6246	8	42.412236	I-20 WB (Merge Analysis)	SW

RPA AM

ID	Run	Density	Name (Type)	Direction
6246	9	41.980071	I-20 WB (Merge Analysis)	SW
6246	10	40.601196	I-20 WB (Merge Analysis)	SW
6247	1	41.36086	I-20 WB (Merge Analysis)	SW
6247	2	40.564057	I-20 WB (Merge Analysis)	SW
6247	3	40.404696	I-20 WB (Merge Analysis)	SW
6247	4	41.746432	I-20 WB (Merge Analysis)	SW
6247	5	45.741255	I-20 WB (Merge Analysis)	SW
6247	6	41.493886	I-20 WB (Merge Analysis)	SW
6247	7	41.199474	I-20 WB (Merge Analysis)	SW
6247	8	42.412236	I-20 WB (Merge Analysis)	SW
6247	9	41.980071	I-20 WB (Merge Analysis)	SW
6247	10	40.601196	I-20 WB (Merge Analysis)	SW
6249	1	39.097776	I-20 WB (Basic Analysis)	SW
6249	2	39.726475	I-20 WB (Basic Analysis)	SW
6249	3	37.389193	I-20 WB (Basic Analysis)	SW
6249	4	38.513346	I-20 WB (Basic Analysis)	SW
6249	5	38.779105	I-20 WB (Basic Analysis)	SW
6249	6	40.170337	I-20 WB (Basic Analysis)	SW
6249	7	38.46213	I-20 WB (Basic Analysis)	SW
6249	8	38.991124	I-20 WB (Basic Analysis)	SW
6249	9	38.022282	I-20 WB (Basic Analysis)	SW
6249	10	37.818311	I-20 WB (Basic Analysis)	SW
6251	1	85.854711	I-20 WB (Basic Analysis)	SW
6251	2	76.166865	I-20 WB (Basic Analysis)	SW
6251	3	85.020388	I-20 WB (Basic Analysis)	SW
6251	4	89.583099	I-20 WB (Basic Analysis)	SW
6251	5	82.719787	I-20 WB (Basic Analysis)	SW
6251	6	81.751375	I-20 WB (Basic Analysis)	SW
6251	7	83.117085	I-20 WB (Basic Analysis)	SW
6251	8	84.849053	I-20 WB (Basic Analysis)	SW
6251	9	88.830718	I-20 WB (Basic Analysis)	SW
6251	10	85.221519	I-20 WB (Basic Analysis)	SW
6254	1	35.277212	I-20 EB (Basic Analysis)	NE
6254	2	33.774908	I-20 EB (Basic Analysis)	NE
6254	3	32.392888	I-20 EB (Basic Analysis)	NE
6254	4	32.57958	I-20 EB (Basic Analysis)	NE
6254	5	33.232374	I-20 EB (Basic Analysis)	NE
6254	6	33.741078	I-20 EB (Basic Analysis)	NE
6254	7	33.233627	I-20 EB (Basic Analysis)	NE
6254	8	31.974398	I-20 EB (Basic Analysis)	NE
6254	9	33.668406	I-20 EB (Basic Analysis)	NE
6254	10	33.333864	I-20 EB (Basic Analysis)	NE
6258	1	33.309673	I-20 EB (Merge Analysis)	NE
6258	2	32.113949	I-20 EB (Merge Analysis)	NE
6258	3	30.700968	I-20 EB (Merge Analysis)	NE
6258	4	32.083372	I-20 EB (Merge Analysis)	NE
6258	5	33.549461	I-20 EB (Merge Analysis)	NE
6258	6	32.767333	I-20 EB (Merge Analysis)	NE
6258	7	33.333812	I-20 EB (Merge Analysis)	NE
6258	8	34.651845	I-20 EB (Merge Analysis)	NE
6258	9	32.873548	I-20 EB (Merge Analysis)	NE
6258	10	32.601573	I-20 EB (Merge Analysis)	NE
6259	1	33.309673	I-20 EB (Merge Analysis)	NE
6259	2	32.113949	I-20 EB (Merge Analysis)	NE
6259	3	30.700968	I-20 EB (Merge Analysis)	NE
6259	4	32.083372	I-20 EB (Merge Analysis)	NE
6259	5	33.549461	I-20 EB (Merge Analysis)	NE
6259	6	32.767333	I-20 EB (Merge Analysis)	NE
6259	7	33.333812	I-20 EB (Merge Analysis)	NE

RPA AM

ID	Run	Density	Name (Type)	Direction
6259	8	34.651845	I-20 EB (Merge Analysis)	NE
6259	9	32.873548	I-20 EB (Merge Analysis)	NE
6259	10	32.601573	I-20 EB (Merge Analysis)	NE
8539	1	136.908782	I-20 WB (Basic Analysis)	SW
8539	2	124.67181	I-20 WB (Basic Analysis)	SW
8539	3	124.295178	I-20 WB (Basic Analysis)	SW
8539	4	136.466461	I-20 WB (Basic Analysis)	SW
8539	5	121.712499	I-20 WB (Basic Analysis)	SW
8539	6	115.498301	I-20 WB (Basic Analysis)	SW
8539	7	138.449867	I-20 WB (Basic Analysis)	SW
8539	8	130.719956	I-20 WB (Basic Analysis)	SW
8539	9	125.037842	I-20 WB (Basic Analysis)	SW
8539	10	120.481115	I-20 WB (Basic Analysis)	SW
8542	1	16.754672	I-20 EB (Basic Analysis)	NE
8542	2	16.145784	I-20 EB (Basic Analysis)	NE
8542	3	16.558727	I-20 EB (Basic Analysis)	NE
8542	4	16.101429	I-20 EB (Basic Analysis)	NE
8542	5	15.866464	I-20 EB (Basic Analysis)	NE
8542	6	16.499214	I-20 EB (Basic Analysis)	NE
8542	7	16.573606	I-20 EB (Basic Analysis)	NE
8542	8	16.484336	I-20 EB (Basic Analysis)	NE
8542	9	16.097499	I-20 EB (Basic Analysis)	NE
8542	10	16.002615	I-20 EB (Basic Analysis)	NE
8554	1	19.956095	I-26 WB (Basic Analysis)	N
8554	2	20.214651	I-26 WB (Basic Analysis)	N
8554	3	20.250431	I-26 WB (Basic Analysis)	N
8554	4	20.511687	I-26 WB (Basic Analysis)	N
8554	5	20.74054	I-26 WB (Basic Analysis)	N
8554	6	20.453293	I-26 WB (Basic Analysis)	N
8554	7	20.064446	I-26 WB (Basic Analysis)	N
8554	8	19.681674	I-26 WB (Basic Analysis)	N
8554	9	20.352706	I-26 WB (Basic Analysis)	N
8554	10	20.388485	I-26 WB (Basic Analysis)	N
8559	1	30.997278	I-126 NB (Basic Analysis)	W
8559	2	32.234109	I-126 NB (Basic Analysis)	W
8559	3	33.071413	I-126 NB (Basic Analysis)	W
8559	4	31.868585	I-126 NB (Basic Analysis)	W
8559	5	30.895271	I-126 NB (Basic Analysis)	W
8559	6	31.294797	I-126 NB (Basic Analysis)	W
8559	7	29.556434	I-126 NB (Basic Analysis)	W
8559	8	31.843083	I-126 NB (Basic Analysis)	W
8559	9	30.482994	I-126 NB (Basic Analysis)	W
8559	10	31.770828	I-126 NB (Basic Analysis)	W
8560	1	16.69375	I-126 SB (Basic Analysis)	E
8560	2	16.085298	I-126 SB (Basic Analysis)	E
8560	3	16.623494	I-126 SB (Basic Analysis)	E
8560	4	16.528101	I-126 SB (Basic Analysis)	E
8560	5	16.499741	I-126 SB (Basic Analysis)	E
8560	6	16.740157	I-126 SB (Basic Analysis)	E
8560	7	16.603513	I-126 SB (Basic Analysis)	E
8560	8	17.110126	I-126 SB (Basic Analysis)	E
8560	9	17.110771	I-126 SB (Basic Analysis)	E
8560	10	16.415306	I-126 SB (Basic Analysis)	E
8658	1	41.36086	I-20 WB (Merge Analysis)	SW
8658	2	40.564057	I-20 WB (Merge Analysis)	SW
8658	3	40.404696	I-20 WB (Merge Analysis)	SW
8658	4	41.746432	I-20 WB (Merge Analysis)	SW

RPA AM

ID	Run	Density	Name (Type)	Direction
8658	5	45.741255	I-20 WB (Merge Analysis)	SW
8658	6	41.493886	I-20 WB (Merge Analysis)	SW
8658	7	41.199474	I-20 WB (Merge Analysis)	SW
8658	8	42.412236	I-20 WB (Merge Analysis)	SW
8658	9	41.980071	I-20 WB (Merge Analysis)	SW
8658	10	40.601196	I-20 WB (Merge Analysis)	SW
8659	1	38.145301	I-20 EB (Basic Analysis)	NE
8659	2	38.21376	I-20 EB (Basic Analysis)	NE
8659	3	35.69342	I-20 EB (Basic Analysis)	NE
8659	4	36.059237	I-20 EB (Basic Analysis)	NE
8659	5	37.390883	I-20 EB (Basic Analysis)	NE
8659	6	37.275152	I-20 EB (Basic Analysis)	NE
8659	7	37.98798	I-20 EB (Basic Analysis)	NE
8659	8	36.345593	I-20 EB (Basic Analysis)	NE
8659	9	37.245972	I-20 EB (Basic Analysis)	NE
8659	10	36.431462	I-20 EB (Basic Analysis)	NE
8763	1	16.366581	I-26 EB (Basic Analysis)	SE
8763	2	17.064354	I-26 EB (Basic Analysis)	SE
8763	3	16.480922	I-26 EB (Basic Analysis)	SE
8763	4	16.844498	I-26 EB (Basic Analysis)	SE
8763	5	16.793503	I-26 EB (Basic Analysis)	SE
8763	6	16.778019	I-26 EB (Basic Analysis)	SE
8763	7	17.034505	I-26 EB (Basic Analysis)	SE
8763	8	16.734856	I-26 EB (Basic Analysis)	SE
8763	9	17.060276	I-26 EB (Basic Analysis)	SE
8763	10	16.959894	I-26 EB (Basic Analysis)	SE
8764	1	23.236886	I-20 WB (Basic Analysis)	S
8764	2	23.782904	I-20 WB (Basic Analysis)	S
8764	3	23.296673	I-20 WB (Basic Analysis)	S
8764	4	23.429035	I-20 WB (Basic Analysis)	S
8764	5	24.485506	I-20 WB (Basic Analysis)	S
8764	6	23.842751	I-20 WB (Basic Analysis)	S
8764	7	23.305241	I-20 WB (Basic Analysis)	S
8764	8	23.957645	I-20 WB (Basic Analysis)	S
8764	9	23.247343	I-20 WB (Basic Analysis)	S
8764	10	24.357661	I-20 WB (Basic Analysis)	S
8765	1	20.364017	I-20 EB (Basic Analysis)	NE
8765	2	19.34068	I-20 EB (Basic Analysis)	NE
8765	3	20.036881	I-20 EB (Basic Analysis)	NE
8765	4	19.118964	I-20 EB (Basic Analysis)	NE
8765	5	19.147074	I-20 EB (Basic Analysis)	NE
8765	6	19.057025	I-20 EB (Basic Analysis)	NE
8765	7	19.793904	I-20 EB (Basic Analysis)	NE
8765	8	19.570878	I-20 EB (Basic Analysis)	NE
8765	9	19.025684	I-20 EB (Basic Analysis)	NE
8765	10	19.523985	I-20 EB (Basic Analysis)	NE
8770	1	75.545384	I-20 WB (Basic Analysis)	SW
8770	2	69.923249	I-20 WB (Basic Analysis)	SW
8770	3	72.465237	I-20 WB (Basic Analysis)	SW
8770	4	78.661006	I-20 WB (Basic Analysis)	SW
8770	5	74.590192	I-20 WB (Basic Analysis)	SW
8770	6	74.737278	I-20 WB (Basic Analysis)	SW
8770	7	73.645816	I-20 WB (Basic Analysis)	SW
8770	8	70.582972	I-20 WB (Basic Analysis)	SW
8770	9	75.101964	I-20 WB (Basic Analysis)	SW
8770	10	77.007589	I-20 WB (Basic Analysis)	SW
8773	1	29.619617	I-26 WB (Basic Analysis)	N

RPA AM

ID	Run	Density	Name (Type)	Direction
8773	2	31.625915	I-26 WB (Basic Analysis)	N
8773	3	29.29018	I-26 WB (Basic Analysis)	N
8773	4	30.452112	I-26 WB (Basic Analysis)	N
8773	5	28.788605	I-26 WB (Basic Analysis)	N
8773	6	29.779883	I-26 WB (Basic Analysis)	N
8773	7	29.972796	I-26 WB (Basic Analysis)	N
8773	8	28.70402	I-26 WB (Basic Analysis)	N
8773	9	30.661349	I-26 WB (Basic Analysis)	N
8773	10	30.044026	I-26 WB (Basic Analysis)	N
8774	1	40.935677	I-20 EB (Diverge Analysis)	NE
8774	2	40.04413	I-20 EB (Diverge Analysis)	NE
8774	3	36.159335	I-20 EB (Diverge Analysis)	NE
8774	4	38.205141	I-20 EB (Diverge Analysis)	NE
8774	5	38.255448	I-20 EB (Diverge Analysis)	NE
8774	6	38.062605	I-20 EB (Diverge Analysis)	NE
8774	7	38.068195	I-20 EB (Diverge Analysis)	NE
8774	8	40.337586	I-20 EB (Diverge Analysis)	NE
8774	9	51.326804	I-20 EB (Diverge Analysis)	NE
8774	10	40.776372	I-20 EB (Diverge Analysis)	NE
8784	1	13.077451	I-126 SB (Basic Analysis)	SE
8784	2	13.218658	I-126 SB (Basic Analysis)	SE
8784	3	13.35292	I-126 SB (Basic Analysis)	SE
8784	4	13.376069	I-126 SB (Basic Analysis)	SE
8784	5	12.43469	I-126 SB (Basic Analysis)	SE
8784	6	13.206312	I-126 SB (Basic Analysis)	SE
8784	7	14.121456	I-126 SB (Basic Analysis)	SE
8784	8	13.805862	I-126 SB (Basic Analysis)	SE
8784	9	14.151549	I-126 SB (Basic Analysis)	SE
8784	10	13.113717	I-126 SB (Basic Analysis)	SE
8789	1	24.017436	I-26 EB (Basic Analysis)	S
8789	2	24.954782	I-26 EB (Basic Analysis)	S
8789	3	24.178497	I-26 EB (Basic Analysis)	S
8789	4	24.800976	I-26 EB (Basic Analysis)	S
8789	5	24.607993	I-26 EB (Basic Analysis)	S
8789	6	24.682961	I-26 EB (Basic Analysis)	S
8789	7	24.724073	I-26 EB (Basic Analysis)	S
8789	8	24.547535	I-26 EB (Basic Analysis)	S
8789	9	25.460214	I-26 EB (Basic Analysis)	S
8789	10	24.249596	I-26 EB (Basic Analysis)	S
8790	1	37.622076	CD ROAD I-26 WB TO I-20 (Basic Analysis)	NE
8790	2	37.001666	CD ROAD I-26 WB TO I-20 (Basic Analysis)	NE
8790	3	44.688939	CD ROAD I-26 WB TO I-20 (Basic Analysis)	NE
8790	4	41.460866	CD ROAD I-26 WB TO I-20 (Basic Analysis)	NE
8790	5	41.548111	CD ROAD I-26 WB TO I-20 (Basic Analysis)	NE
8790	6	36.584828	CD ROAD I-26 WB TO I-20 (Basic Analysis)	NE
8790	7	38.542998	CD ROAD I-26 WB TO I-20 (Basic Analysis)	NE
8790	8	41.102191	CD ROAD I-26 WB TO I-20 (Basic Analysis)	NE
8790	9	38.397589	CD ROAD I-26 WB TO I-20 (Basic Analysis)	NE
8790	10	39.609328	CD ROAD I-26 WB TO I-20 (Basic Analysis)	NE
8791	1	18.630352	CD ROAD I-20 WB TO I-20 (Basic Analysis)	NE
8791	2	18.079844	CD ROAD I-20 WB TO I-20 (Basic Analysis)	NE
8791	3	19.028746	CD ROAD I-20 WB TO I-20 (Basic Analysis)	NE
8791	4	18.731761	CD ROAD I-20 WB TO I-20 (Basic Analysis)	NE
8791	5	17.398952	CD ROAD I-20 WB TO I-20 (Basic Analysis)	NE
8791	6	17.427926	CD ROAD I-20 WB TO I-20 (Basic Analysis)	NE
8791	7	19.44887	CD ROAD I-20 WB TO I-20 (Basic Analysis)	NE
8791	8	18.347854	CD ROAD I-20 WB TO I-20 (Basic Analysis)	NE

RPA AM

ID	Run	Density	Name (Type)	Direction
8791	9	18.036383	CD ROAD I-20 WB TO I-20 (Basic Analysis)	NE
8791	10	16.073387	CD ROAD I-20 WB TO I-20 (Basic Analysis)	NE
8792	1	14.101103	I-26 EB (Basic Analysis)	S
8792	2	15.384589	I-26 EB (Basic Analysis)	S
8792	3	15.429418	I-26 EB (Basic Analysis)	S
8792	4	14.744058	I-26 EB (Basic Analysis)	S
8792	5	15.146497	I-26 EB (Basic Analysis)	S
8792	6	15.374947	I-26 EB (Basic Analysis)	S
8792	7	15.441644	I-26 EB (Basic Analysis)	S
8792	8	15.053203	I-26 EB (Basic Analysis)	S
8792	9	15.539747	I-26 EB (Basic Analysis)	S
8792	10	14.821482	I-26 EB (Basic Analysis)	S
8802	1	17.819975	CD ROAD I-20 EB (Basic Analysis)	NE
8802	2	17.377204	CD ROAD I-20 EB (Basic Analysis)	NE
8802	3	17.44892	CD ROAD I-20 EB (Basic Analysis)	NE
8802	4	15.496986	CD ROAD I-20 EB (Basic Analysis)	NE
8802	5	15.001207	CD ROAD I-20 EB (Basic Analysis)	NE
8802	6	17.352259	CD ROAD I-20 EB (Basic Analysis)	NE
8802	7	18.290809	CD ROAD I-20 EB (Basic Analysis)	NE
8802	8	17.757613	CD ROAD I-20 EB (Basic Analysis)	NE
8802	9	18.053833	CD ROAD I-20 EB (Basic Analysis)	NE
8802	10	17.991471	CD ROAD I-20 EB (Basic Analysis)	NE
8819	1	72.263949	CD ROAD I-20 WB (Weaving Analysis)	SW
8819	2	45.736505	CD ROAD I-20 WB (Weaving Analysis)	SW
8819	3	38.561148	CD ROAD I-20 WB (Weaving Analysis)	SW
8819	4	47.413666	CD ROAD I-20 WB (Weaving Analysis)	SW
8819	5	22.784696	CD ROAD I-20 WB (Weaving Analysis)	SW
8819	6	34.214682	CD ROAD I-20 WB (Weaving Analysis)	SW
8819	7	66.877162	CD ROAD I-20 WB (Weaving Analysis)	SW
8819	8	61.859229	CD ROAD I-20 WB (Weaving Analysis)	SW
8819	9	38.512971	CD ROAD I-20 WB (Weaving Analysis)	SW
8819	10	22.604032	CD ROAD I-20 WB (Weaving Analysis)	SW
8826	1	14.652532	CD ROAD I-20 EB (Basic Analysis)	E
8826	2	14.571618	CD ROAD I-20 EB (Basic Analysis)	E
8826	3	13.553057	CD ROAD I-20 EB (Basic Analysis)	E
8826	4	13.931448	CD ROAD I-20 EB (Basic Analysis)	E
8826	5	13.986183	CD ROAD I-20 EB (Basic Analysis)	E
8826	6	14.300319	CD ROAD I-20 EB (Basic Analysis)	E
8826	7	13.281758	CD ROAD I-20 EB (Basic Analysis)	E
8826	8	13.450725	CD ROAD I-20 EB (Basic Analysis)	E
8826	9	14.002842	CD ROAD I-20 EB (Basic Analysis)	E
8826	10	14.03378	CD ROAD I-20 EB (Basic Analysis)	E
8828	1	24.8333	(Weaving Analysis)	NW
8828	2	26.142692	(Weaving Analysis)	NW
8828	3	26.069112	(Weaving Analysis)	NW
8828	4	26.301558	(Weaving Analysis)	NW
8828	5	25.906901	(Weaving Analysis)	NW
8828	6	27.152747	(Weaving Analysis)	NW
8828	7	23.813212	(Weaving Analysis)	NW
8828	8	24.709552	(Weaving Analysis)	NW
8828	9	24.577442	(Weaving Analysis)	NW
8828	10	24.159373	(Weaving Analysis)	NW
8829	1	17.085456	CD ROAD I-20 EB (Basic Analysis)	E
8829	2	18.258013	CD ROAD I-20 EB (Basic Analysis)	E
8829	3	17.093524	CD ROAD I-20 EB (Basic Analysis)	E
8829	4	18.142371	CD ROAD I-20 EB (Basic Analysis)	E
8829	5	16.878375	CD ROAD I-20 EB (Basic Analysis)	E

RPA AM

ID	Run	Density	Name (Type)	Direction
8829	6	19.444018	CD ROAD I-20 EB (Basic Analysis)	E
8829	7	19.134742	CD ROAD I-20 EB (Basic Analysis)	E
8829	8	17.574918	CD ROAD I-20 EB (Basic Analysis)	E
8829	9	18.309111	CD ROAD I-20 EB (Basic Analysis)	E
8829	10	17.806202	CD ROAD I-20 EB (Basic Analysis)	E
8830	1	35.164182	CD ROAD I-26 EB (Weaving Analysis)	SE
8830	2	25.569169	CD ROAD I-26 EB (Weaving Analysis)	SE
8830	3	25.415138	CD ROAD I-26 EB (Weaving Analysis)	SE
8830	4	26.147725	CD ROAD I-26 EB (Weaving Analysis)	SE
8830	5	24.194159	CD ROAD I-26 EB (Weaving Analysis)	SE
8830	6	27.297323	CD ROAD I-26 EB (Weaving Analysis)	SE
8830	7	29.344811	CD ROAD I-26 EB (Weaving Analysis)	SE
8830	8	24.881664	CD ROAD I-26 EB (Weaving Analysis)	SE
8830	9	26.647387	CD ROAD I-26 EB (Weaving Analysis)	SE
8830	10	24.859123	CD ROAD I-26 EB (Weaving Analysis)	SE
8831	1	45.002098	I-20 WB (Diverge Analysis)	SW
8831	2	43.213417	I-20 WB (Diverge Analysis)	SW
8831	3	42.704555	I-20 WB (Diverge Analysis)	SW
8831	4	44.269459	I-20 WB (Diverge Analysis)	SW
8831	5	49.648529	I-20 WB (Diverge Analysis)	SW
8831	6	44.737704	I-20 WB (Diverge Analysis)	SW
8831	7	43.556746	I-20 WB (Diverge Analysis)	SW
8831	8	45.630511	I-20 WB (Diverge Analysis)	SW
8831	9	44.910135	I-20 WB (Diverge Analysis)	SW
8831	10	43.183529	I-20 WB (Diverge Analysis)	SW
8832	1	45.002098	I-20 WB (Diverge Analysis)	SW
8832	2	43.213417	I-20 WB (Diverge Analysis)	SW
8832	3	42.704555	I-20 WB (Diverge Analysis)	SW
8832	4	44.269459	I-20 WB (Diverge Analysis)	SW
8832	5	49.648529	I-20 WB (Diverge Analysis)	SW
8832	6	44.737704	I-20 WB (Diverge Analysis)	SW
8832	7	43.556746	I-20 WB (Diverge Analysis)	SW
8832	8	45.630511	I-20 WB (Diverge Analysis)	SW
8832	9	44.910135	I-20 WB (Diverge Analysis)	SW
8832	10	43.183529	I-20 WB (Diverge Analysis)	SW
8837	1	11.815463	I-20 WB (Basic Analysis)	W
8837	2	11.92464	I-20 WB (Basic Analysis)	W
8837	3	12.139344	I-20 WB (Basic Analysis)	W
8837	4	11.899137	I-20 WB (Basic Analysis)	W
8837	5	12.336188	I-20 WB (Basic Analysis)	W
8837	6	13.119491	I-20 WB (Basic Analysis)	W
8837	7	13.169798	I-20 WB (Basic Analysis)	W
8837	8	12.482566	I-20 WB (Basic Analysis)	W
8837	9	13.440172	I-20 WB (Basic Analysis)	W
8837	10	12.066291	I-20 WB (Basic Analysis)	W
8838	1	11.858925	I-20 WB (Basic Analysis)	SW
8838	2	12.36452	I-20 WB (Basic Analysis)	SW
8838	3	11.453671	I-20 WB (Basic Analysis)	SW
8838	4	11.336996	I-20 WB (Basic Analysis)	SW
8838	5	11.933598	I-20 WB (Basic Analysis)	SW
8838	6	11.724359	I-20 WB (Basic Analysis)	SW
8838	7	12.166172	I-20 WB (Basic Analysis)	SW
8838	8	12.152948	I-20 WB (Basic Analysis)	SW
8838	9	12.159171	I-20 WB (Basic Analysis)	SW
8838	10	12.101611	I-20 WB (Basic Analysis)	SW
8839	1	38.145301	I-20 EB (Basic Analysis)	NE
8839	2	38.21376	I-20 EB (Basic Analysis)	NE

RPA AM

ID	Run	Density	Name (Type)	Direction
8839	3	35.69342	I-20 EB (Basic Analysis)	NE
8839	4	36.059237	I-20 EB (Basic Analysis)	NE
8839	5	37.390883	I-20 EB (Basic Analysis)	NE
8839	6	37.275152	I-20 EB (Basic Analysis)	NE
8839	7	37.98798	I-20 EB (Basic Analysis)	NE
8839	8	36.345593	I-20 EB (Basic Analysis)	NE
8839	9	37.245972	I-20 EB (Basic Analysis)	NE
8839	10	36.431462	I-20 EB (Basic Analysis)	NE
8845	1	7.567537	I-20 WB (Merge Analysis)	W
8845	2	7.334503	I-20 WB (Merge Analysis)	W
8845	3	7.62828	I-20 WB (Merge Analysis)	W
8845	4	7.808302	I-20 WB (Merge Analysis)	W
8845	5	7.647056	I-20 WB (Merge Analysis)	W
8845	6	8.375978	I-20 WB (Merge Analysis)	W
8845	7	7.958504	I-20 WB (Merge Analysis)	W
8845	8	7.723261	I-20 WB (Merge Analysis)	W
8845	9	7.920954	I-20 WB (Merge Analysis)	W
8845	10	8.012621	I-20 WB (Merge Analysis)	W
8849	1	23.021645	CD ROAD I-20 WB (Weaving Analysis)	W
8849	2	23.553567	CD ROAD I-20 WB (Weaving Analysis)	W
8849	3	23.12098	CD ROAD I-20 WB (Weaving Analysis)	W
8849	4	23.516717	CD ROAD I-20 WB (Weaving Analysis)	W
8849	5	23.628869	CD ROAD I-20 WB (Weaving Analysis)	W
8849	6	24.282556	CD ROAD I-20 WB (Weaving Analysis)	W
8849	7	23.074516	CD ROAD I-20 WB (Weaving Analysis)	W
8849	8	23.431801	CD ROAD I-20 WB (Weaving Analysis)	W
8849	9	22.231773	CD ROAD I-20 WB (Weaving Analysis)	W
8849	10	23.332466	CD ROAD I-20 WB (Weaving Analysis)	W
8852	1	11.040244	(Basic Analysis)	E
8852	2	9.985956	(Basic Analysis)	E
8852	3	11.85285	(Basic Analysis)	E
8852	4	12.315196	(Basic Analysis)	E
8852	5	10.238145	(Basic Analysis)	E
8852	6	11.646196	(Basic Analysis)	E
8852	7	10.763537	(Basic Analysis)	E
8852	8	11.369489	(Basic Analysis)	E
8852	9	11.085778	(Basic Analysis)	E
8852	10	10.32571	(Basic Analysis)	E
8853	1	15.861539	CD ROAD I-20 EB (Basic Analysis)	E
8853	2	16.700016	CD ROAD I-20 EB (Basic Analysis)	E
8853	3	16.544118	CD ROAD I-20 EB (Basic Analysis)	E
8853	4	15.04413	CD ROAD I-20 EB (Basic Analysis)	E
8853	5	16.156481	CD ROAD I-20 EB (Basic Analysis)	E
8853	6	16.417715	CD ROAD I-20 EB (Basic Analysis)	E
8853	7	16.72319	CD ROAD I-20 EB (Basic Analysis)	E
8853	8	16.504091	CD ROAD I-20 EB (Basic Analysis)	E
8853	9	17.502679	CD ROAD I-20 EB (Basic Analysis)	E
8853	10	17.702818	CD ROAD I-20 EB (Basic Analysis)	E
8855	1	24.131767	CD ROAD I-20 WB TO I-20 (Basic Analysis)	NW
8855	2	24.51982	CD ROAD I-20 WB TO I-20 (Basic Analysis)	NW
8855	3	23.758205	CD ROAD I-20 WB TO I-20 (Basic Analysis)	NW
8855	4	23.943376	CD ROAD I-20 WB TO I-20 (Basic Analysis)	NW
8855	5	23.579475	CD ROAD I-20 WB TO I-20 (Basic Analysis)	NW
8855	6	23.386254	CD ROAD I-20 WB TO I-20 (Basic Analysis)	NW
8855	7	23.843545	CD ROAD I-20 WB TO I-20 (Basic Analysis)	NW
8855	8	22.584384	CD ROAD I-20 WB TO I-20 (Basic Analysis)	NW
8855	9	24.212276	CD ROAD I-20 WB TO I-20 (Basic Analysis)	NW

RPA AM

ID	Run	Density	Name (Type)	Direction
8855	10	22.983709	CD ROAD I-20 WB TO I-20 (Basic Analysis)	NW
8863	1	15.677599	(Basic Analysis)	SE
8863	2	16.665426	(Basic Analysis)	SE
8863	3	15.847342	(Basic Analysis)	SE
8863	4	16.313178	(Basic Analysis)	SE
8863	5	16.707543	(Basic Analysis)	SE
8863	6	16.712648	(Basic Analysis)	SE
8863	7	15.907327	(Basic Analysis)	SE
8863	8	16.970453	(Basic Analysis)	SE
8863	9	17.178483	(Basic Analysis)	SE
8863	10	17.12488	(Basic Analysis)	SE
8869	1	16.134232	(Weaving Analysis)	SE
8869	2	13.934983	(Weaving Analysis)	SE
8869	3	16.136633	(Weaving Analysis)	SE
8869	4	14.628851	(Weaving Analysis)	SE
8869	5	16.391132	(Weaving Analysis)	SE
8869	6	13.987803	(Weaving Analysis)	SE
8869	7	15.296309	(Weaving Analysis)	SE
8869	8	14.518408	(Weaving Analysis)	SE
8869	9	14.542417	(Weaving Analysis)	SE
8869	10	13.620461	(Weaving Analysis)	SE
8871	1	25.793496	(Basic Analysis)	W
8871	2	26.812347	(Basic Analysis)	W
8871	3	28.092048	(Basic Analysis)	W
8871	4	28.085911	(Basic Analysis)	W
8871	5	27.736064	(Basic Analysis)	W
8871	6	27.779028	(Basic Analysis)	W
8871	7	26.701869	(Basic Analysis)	W
8871	8	26.008314	(Basic Analysis)	W
8871	9	26.760177	(Basic Analysis)	W
8871	10	24.320459	(Basic Analysis)	W
8877	1	7.549939	I-20 WB (Diverge Analysis)	W
8877	2	7.406479	I-20 WB (Diverge Analysis)	W
8877	3	7.554757	I-20 WB (Diverge Analysis)	W
8877	4	7.534658	I-20 WB (Diverge Analysis)	W
8877	5	7.551866	I-20 WB (Diverge Analysis)	W
8877	6	8.262052	I-20 WB (Diverge Analysis)	W
8877	7	8.159816	I-20 WB (Diverge Analysis)	W
8877	8	8.340349	I-20 WB (Diverge Analysis)	W
8877	9	7.982603	I-20 WB (Diverge Analysis)	W
8877	10	8.020339	I-20 WB (Diverge Analysis)	W
8878	1	11.815463	I-20 WB (Basic Analysis)	W
8878	2	11.92464	I-20 WB (Basic Analysis)	W
8878	3	12.139344	I-20 WB (Basic Analysis)	W
8878	4	11.899137	I-20 WB (Basic Analysis)	W
8878	5	12.336188	I-20 WB (Basic Analysis)	W
8878	6	13.119491	I-20 WB (Basic Analysis)	W
8878	7	13.169798	I-20 WB (Basic Analysis)	W
8878	8	12.482566	I-20 WB (Basic Analysis)	W
8878	9	13.440172	I-20 WB (Basic Analysis)	W
8878	10	12.066291	I-20 WB (Basic Analysis)	W
8883	1	54.945739	I-26 WB (Basic Analysis)	NW
8883	2	56.785716	I-26 WB (Basic Analysis)	NW
8883	3	55.430251	I-26 WB (Basic Analysis)	NW
8883	4	52.484744	I-26 WB (Basic Analysis)	NW
8883	5	54.509985	I-26 WB (Basic Analysis)	NW
8883	6	56.457981	I-26 WB (Basic Analysis)	NW

RPA AM

ID	Run	Density	Name (Type)	Direction
8883	7	56.50674	I-26 WB (Basic Analysis)	NW
8883	8	56.577081	I-26 WB (Basic Analysis)	NW
8883	9	58.612672	I-26 WB (Basic Analysis)	NW
8883	10	50.353349	I-26 WB (Basic Analysis)	NW
8886	1	45.422006	I-26 WB (Basic Analysis)	NW
8886	2	46.236181	I-26 WB (Basic Analysis)	NW
8886	3	45.366349	I-26 WB (Basic Analysis)	NW
8886	4	53.399701	I-26 WB (Basic Analysis)	NW
8886	5	46.89025	I-26 WB (Basic Analysis)	NW
8886	6	49.427061	I-26 WB (Basic Analysis)	NW
8886	7	45.989272	I-26 WB (Basic Analysis)	NW
8886	8	44.138725	I-26 WB (Basic Analysis)	NW
8886	9	46.319976	I-26 WB (Basic Analysis)	NW
8886	10	44.510196	I-26 WB (Basic Analysis)	NW
8887	1	43.013162	I-26 WB (Merge Analysis)	NW
8887	2	41.67118	I-26 WB (Merge Analysis)	NW
8887	3	42.121451	I-26 WB (Merge Analysis)	NW
8887	4	44.934315	I-26 WB (Merge Analysis)	NW
8887	5	44.454027	I-26 WB (Merge Analysis)	NW
8887	6	44.461973	I-26 WB (Merge Analysis)	NW
8887	7	40.924262	I-26 WB (Merge Analysis)	NW
8887	8	40.318604	I-26 WB (Merge Analysis)	NW
8887	9	41.194424	I-26 WB (Merge Analysis)	NW
8887	10	41.238568	I-26 WB (Merge Analysis)	NW
8910	1	25.659435	I-26 EB (Basic Analysis)	SE
8910	2	26.191129	I-26 EB (Basic Analysis)	SE
8910	3	25.824887	I-26 EB (Basic Analysis)	SE
8910	4	27.310737	I-26 EB (Basic Analysis)	SE
8910	5	25.460251	I-26 EB (Basic Analysis)	SE
8910	6	27.787816	I-26 EB (Basic Analysis)	SE
8910	7	28.338785	I-26 EB (Basic Analysis)	SE
8910	8	26.57504	I-26 EB (Basic Analysis)	SE
8910	9	28.973283	I-26 EB (Basic Analysis)	SE
8910	10	26.941282	I-26 EB (Basic Analysis)	SE
8915	1	19.794462	I-26 EB (Basic Analysis)	SE
8915	2	20.73978	I-26 EB (Basic Analysis)	SE
8915	3	19.880775	I-26 EB (Basic Analysis)	SE
8915	4	20.397924	I-26 EB (Basic Analysis)	SE
8915	5	19.663054	I-26 EB (Basic Analysis)	SE
8915	6	20.76548	I-26 EB (Basic Analysis)	SE
8915	7	20.262878	I-26 EB (Basic Analysis)	SE
8915	8	19.787189	I-26 EB (Basic Analysis)	SE
8915	9	20.481085	I-26 EB (Basic Analysis)	SE
8915	10	19.922719	I-26 EB (Basic Analysis)	SE
8940	1	22.540124	I-26 EB (Basic Analysis)	SE
8940	2	26.078577	I-26 EB (Basic Analysis)	SE
8940	3	25.060857	I-26 EB (Basic Analysis)	SE
8940	4	27.198749	I-26 EB (Basic Analysis)	SE
8940	5	27.256707	I-26 EB (Basic Analysis)	SE
8940	6	27.17824	I-26 EB (Basic Analysis)	SE
8940	7	27.298403	I-26 EB (Basic Analysis)	SE
8940	8	25.608152	I-26 EB (Basic Analysis)	SE
8940	9	24.700691	I-26 EB (Basic Analysis)	SE
8940	10	26.515961	I-26 EB (Basic Analysis)	SE
8955	1	24.115745	I-20 EB (Basic Analysis)	NE
8955	2	25.370498	I-20 EB (Basic Analysis)	NE
8955	3	22.087551	I-20 EB (Basic Analysis)	NE

RPA AM

ID	Run	Density	Name (Type)	Direction
8955	4	21.291854	I-20 EB (Basic Analysis)	NE
8955	5	22.70519	I-20 EB (Basic Analysis)	NE
8955	6	22.755269	I-20 EB (Basic Analysis)	NE
8955	7	23.717896	I-20 EB (Basic Analysis)	NE
8955	8	23.100257	I-20 EB (Basic Analysis)	NE
8955	9	22.624508	I-20 EB (Basic Analysis)	NE
8955	10	23.467502	I-20 EB (Basic Analysis)	NE
8959	1	136.908782	I-20 WB (Basic Analysis)	SW
8959	2	124.67181	I-20 WB (Basic Analysis)	SW
8959	3	124.295178	I-20 WB (Basic Analysis)	SW
8959	4	136.466461	I-20 WB (Basic Analysis)	SW
8959	5	121.712499	I-20 WB (Basic Analysis)	SW
8959	6	115.498301	I-20 WB (Basic Analysis)	SW
8959	7	138.449867	I-20 WB (Basic Analysis)	SW
8959	8	130.719956	I-20 WB (Basic Analysis)	SW
8959	9	125.037842	I-20 WB (Basic Analysis)	SW
8959	10	120.481115	I-20 WB (Basic Analysis)	SW
8975	1	18.054896	I-26 EB (Weaving Analysis)	SE
8975	2	20.250684	I-26 EB (Weaving Analysis)	SE
8975	3	19.97621	I-26 EB (Weaving Analysis)	SE
8975	4	20.358461	I-26 EB (Weaving Analysis)	SE
8975	5	20.229128	I-26 EB (Weaving Analysis)	SE
8975	6	19.980521	I-26 EB (Weaving Analysis)	SE
8975	7	20.059558	I-26 EB (Weaving Analysis)	SE
8975	8	17.914066	I-26 EB (Weaving Analysis)	SE
8975	9	19.602581	I-26 EB (Weaving Analysis)	SE
8975	10	20.779512	I-26 EB (Weaving Analysis)	SE
8986	1	22.884079	I-26 EB (Basic Analysis)	SE
8986	2	24.747163	I-26 EB (Basic Analysis)	SE
8986	3	23.835441	I-26 EB (Basic Analysis)	SE
8986	4	24.500514	I-26 EB (Basic Analysis)	SE
8986	5	22.959689	I-26 EB (Basic Analysis)	SE
8986	6	24.143753	I-26 EB (Basic Analysis)	SE
8986	7	23.818557	I-26 EB (Basic Analysis)	SE
8986	8	23.599803	I-26 EB (Basic Analysis)	SE
8986	9	24.270748	I-26 EB (Basic Analysis)	SE
8986	10	24.070346	I-26 EB (Basic Analysis)	SE
8994	1	13.800149	I-126 SB (Basic Analysis)	SE
8994	2	14.267084	I-126 SB (Basic Analysis)	SE
8994	3	15.527167	I-126 SB (Basic Analysis)	SE
8994	4	14.877936	I-126 SB (Basic Analysis)	SE
8994	5	15.191358	I-126 SB (Basic Analysis)	SE
8994	6	14.593298	I-126 SB (Basic Analysis)	SE
8994	7	14.51974	I-126 SB (Basic Analysis)	SE
8994	8	15.952525	I-126 SB (Basic Analysis)	SE
8994	9	14.989873	I-126 SB (Basic Analysis)	SE
8994	10	15.191358	I-126 SB (Basic Analysis)	SE
8996	1	18.630352	CD ROAD I-20 WB TO I-20 (Basic Analysis)	NE
8996	2	18.079844	CD ROAD I-20 WB TO I-20 (Basic Analysis)	NE
8996	3	19.028746	CD ROAD I-20 WB TO I-20 (Basic Analysis)	NE
8996	4	18.731761	CD ROAD I-20 WB TO I-20 (Basic Analysis)	NE
8996	5	17.398952	CD ROAD I-20 WB TO I-20 (Basic Analysis)	NE
8996	6	17.427926	CD ROAD I-20 WB TO I-20 (Basic Analysis)	NE
8996	7	19.44887	CD ROAD I-20 WB TO I-20 (Basic Analysis)	NE
8996	8	18.347854	CD ROAD I-20 WB TO I-20 (Basic Analysis)	NE
8996	9	18.036383	CD ROAD I-20 WB TO I-20 (Basic Analysis)	NE
8996	10	16.073387	CD ROAD I-20 WB TO I-20 (Basic Analysis)	NE

RPA AM

ID	Run	Density	Name (Type)	Direction
9001	1	18.02202	I-126 NB (Merge Analysis)	NW
9001	2	16.156583	I-126 NB (Merge Analysis)	NW
9001	3	14.888718	I-126 NB (Merge Analysis)	NW
9001	4	16.450626	I-126 NB (Merge Analysis)	NW
9001	5	15.328202	I-126 NB (Merge Analysis)	NW
9001	6	16.333641	I-126 NB (Merge Analysis)	NW
9001	7	16.586582	I-126 NB (Merge Analysis)	NW
9001	8	15.928936	I-126 NB (Merge Analysis)	NW
9001	9	16.374744	I-126 NB (Merge Analysis)	NW
9001	10	15.909965	I-126 NB (Merge Analysis)	NW
9005	1	26.533383	I-126 NB (Basic Analysis)	NW
9005	2	24.890449	I-126 NB (Basic Analysis)	NW
9005	3	24.541325	I-126 NB (Basic Analysis)	NW
9005	4	23.514491	I-126 NB (Basic Analysis)	NW
9005	5	24.644008	I-126 NB (Basic Analysis)	NW
9005	6	24.602935	I-126 NB (Basic Analysis)	NW
9005	7	23.175636	I-126 NB (Basic Analysis)	NW
9005	8	25.691379	I-126 NB (Basic Analysis)	NW
9005	9	24.674814	I-126 NB (Basic Analysis)	NW
9005	10	24.835684	I-126 NB (Basic Analysis)	NW
9012	1	13.375158	I-126 SB (Merge Analysis)	E
9012	2	14.268762	I-126 SB (Merge Analysis)	E
9012	3	13.687475	I-126 SB (Merge Analysis)	E
9012	4	14.653322	I-126 SB (Merge Analysis)	E
9012	5	14.040915	I-126 SB (Merge Analysis)	E
9012	6	22.315641	I-126 SB (Merge Analysis)	E
9012	7	15.211269	I-126 SB (Merge Analysis)	E
9012	8	18.704548	I-126 SB (Merge Analysis)	E
9012	9	13.866418	I-126 SB (Merge Analysis)	E
9012	10	19.057988	I-126 SB (Merge Analysis)	E
9017	1	15.516153	I-126 SB (Basic Analysis)	E
9017	2	16.891372	I-126 SB (Basic Analysis)	E
9017	3	16.667771	I-126 SB (Basic Analysis)	E
9017	4	17.323959	I-126 SB (Basic Analysis)	E
9017	5	17.752162	I-126 SB (Basic Analysis)	E
9017	6	17.198275	I-126 SB (Basic Analysis)	E
9017	7	16.390096	I-126 SB (Basic Analysis)	E
9017	8	18.067834	I-126 SB (Basic Analysis)	E
9017	9	16.429555	I-126 SB (Basic Analysis)	E
9017	10	17.167585	I-126 SB (Basic Analysis)	E
9018	1	15.516153	I-126 SB (Basic Analysis)	E
9018	2	16.891372	I-126 SB (Basic Analysis)	E
9018	3	16.667771	I-126 SB (Basic Analysis)	E
9018	4	17.323959	I-126 SB (Basic Analysis)	E
9018	5	17.752162	I-126 SB (Basic Analysis)	E
9018	6	17.198275	I-126 SB (Basic Analysis)	E
9018	7	16.390096	I-126 SB (Basic Analysis)	E
9018	8	18.067834	I-126 SB (Basic Analysis)	E
9018	9	16.429555	I-126 SB (Basic Analysis)	E
9018	10	17.167585	I-126 SB (Basic Analysis)	E
9019	1	23.68797	I-126 NB (Diverge Analysis)	NW
9019	2	23.850087	I-126 NB (Diverge Analysis)	NW
9019	3	23.277022	I-126 NB (Diverge Analysis)	NW
9019	4	23.224239	I-126 NB (Diverge Analysis)	NW
9019	5	23.498205	I-126 NB (Diverge Analysis)	NW
9019	6	23.505745	I-126 NB (Diverge Analysis)	NW
9019	7	22.819575	I-126 NB (Diverge Analysis)	NW

RPA AM

ID	Run	Density	Name (Type)	Direction
9019	8	23.798562	I-126 NB (Diverge Analysis)	NW
9019	9	24.190659	I-126 NB (Diverge Analysis)	NW
9019	10	23.111134	I-126 NB (Diverge Analysis)	NW
9022	1	13.14855	107 (Basic Analysis)	NW
9022	2	13.434593	107 (Basic Analysis)	NW
9022	3	14.210996	107 (Basic Analysis)	NW
9022	4	13.623193	107 (Basic Analysis)	NW
9022	5	13.076254	107 (Basic Analysis)	NW
9022	6	13.18627	107 (Basic Analysis)	NW
9022	7	13.62005	107 (Basic Analysis)	NW
9022	8	13.774073	107 (Basic Analysis)	NW
9022	9	13.928096	107 (Basic Analysis)	NW
9022	10	12.994527	107 (Basic Analysis)	NW
9023	1	30.341265	I-126 NB (Basic Analysis)	NW
9023	2	31.679576	I-126 NB (Basic Analysis)	NW
9023	3	29.671263	I-126 NB (Basic Analysis)	NW
9023	4	29.415782	I-126 NB (Basic Analysis)	NW
9023	5	29.568055	I-126 NB (Basic Analysis)	NW
9023	6	31.253211	I-126 NB (Basic Analysis)	NW
9023	7	29.552828	I-126 NB (Basic Analysis)	NW
9023	8	29.170454	I-126 NB (Basic Analysis)	NW
9023	9	30.679649	I-126 NB (Basic Analysis)	NW
9023	10	29.539293	I-126 NB (Basic Analysis)	NW
9025	1	29.229468	CD ROAD I-26 WB TO I-20 (Diverge Analysis)	NE
9025	2	30.199528	CD ROAD I-26 WB TO I-20 (Diverge Analysis)	NE
9025	3	31.095559	CD ROAD I-26 WB TO I-20 (Diverge Analysis)	NE
9025	4	30.955155	CD ROAD I-26 WB TO I-20 (Diverge Analysis)	NE
9025	5	32.407694	CD ROAD I-26 WB TO I-20 (Diverge Analysis)	NE
9025	6	29.785976	CD ROAD I-26 WB TO I-20 (Diverge Analysis)	NE
9025	7	30.536497	CD ROAD I-26 WB TO I-20 (Diverge Analysis)	NE
9025	8	28.621903	CD ROAD I-26 WB TO I-20 (Diverge Analysis)	NE
9025	9	30.396093	CD ROAD I-26 WB TO I-20 (Diverge Analysis)	NE
9025	10	30.413963	CD ROAD I-26 WB TO I-20 (Diverge Analysis)	NE
9033	1	45.422006	I-26 WB (Basic Analysis)	NW
9033	2	46.236181	I-26 WB (Basic Analysis)	NW
9033	3	45.366349	I-26 WB (Basic Analysis)	NW
9033	4	53.399701	I-26 WB (Basic Analysis)	NW
9033	5	46.89025	I-26 WB (Basic Analysis)	NW
9033	6	49.427061	I-26 WB (Basic Analysis)	NW
9033	7	45.989272	I-26 WB (Basic Analysis)	NW
9033	8	44.138725	I-26 WB (Basic Analysis)	NW
9033	9	46.319976	I-26 WB (Basic Analysis)	NW
9033	10	44.510196	I-26 WB (Basic Analysis)	NW
9039	1	38.145301	I-20 EB (Basic Analysis)	NE
9039	2	38.21376	I-20 EB (Basic Analysis)	NE
9039	3	35.69342	I-20 EB (Basic Analysis)	NE
9039	4	36.059237	I-20 EB (Basic Analysis)	NE
9039	5	37.390883	I-20 EB (Basic Analysis)	NE
9039	6	37.275152	I-20 EB (Basic Analysis)	NE
9039	7	37.98798	I-20 EB (Basic Analysis)	NE
9039	8	36.345593	I-20 EB (Basic Analysis)	NE
9039	9	37.245972	I-20 EB (Basic Analysis)	NE
9039	10	36.431462	I-20 EB (Basic Analysis)	NE
9040	1	39.097776	I-20 WB (Basic Analysis)	SW
9040	2	39.726475	I-20 WB (Basic Analysis)	SW
9040	3	37.389193	I-20 WB (Basic Analysis)	SW
9040	4	38.513346	I-20 WB (Basic Analysis)	SW

RPA AM

ID	Run	Density	Name (Type)	Direction
9040	5	38.779105	I-20 WB (Basic Analysis)	SW
9040	6	40.170337	I-20 WB (Basic Analysis)	SW
9040	7	38.46213	I-20 WB (Basic Analysis)	SW
9040	8	38.991124	I-20 WB (Basic Analysis)	SW
9040	9	38.022282	I-20 WB (Basic Analysis)	SW
9040	10	37.818311	I-20 WB (Basic Analysis)	SW
9042	1	10.815693	I-20 WB (Basic Analysis)	W
9042	2	11.120971	I-20 WB (Basic Analysis)	W
9042	3	10.124107	I-20 WB (Basic Analysis)	W
9042	4	11.236863	I-20 WB (Basic Analysis)	W
9042	5	10.957968	I-20 WB (Basic Analysis)	W
9042	6	10.223982	I-20 WB (Basic Analysis)	W
9042	7	11.187868	I-20 WB (Basic Analysis)	W
9042	8	11.56287	I-20 WB (Basic Analysis)	W
9042	9	10.632903	I-20 WB (Basic Analysis)	W
9042	10	11.177504	I-20 WB (Basic Analysis)	W
9043	1	30.256834	CD ROAD I-20 WB (Basic Analysis)	W
9043	2	29.888423	CD ROAD I-20 WB (Basic Analysis)	W
9043	3	31.416852	CD ROAD I-20 WB (Basic Analysis)	W
9043	4	30.899189	CD ROAD I-20 WB (Basic Analysis)	W
9043	5	30.253055	CD ROAD I-20 WB (Basic Analysis)	W
9043	6	31.760701	CD ROAD I-20 WB (Basic Analysis)	W
9043	7	29.856306	CD ROAD I-20 WB (Basic Analysis)	W
9043	8	28.594266	CD ROAD I-20 WB (Basic Analysis)	W
9043	9	30.725375	CD ROAD I-20 WB (Basic Analysis)	W
9043	10	29.053361	CD ROAD I-20 WB (Basic Analysis)	W
9045	1	25.351162	CD ROAD I-20 EB (Weaving Analysis)	E
9045	2	25.183069	CD ROAD I-20 EB (Weaving Analysis)	E
9045	3	23.693715	CD ROAD I-20 EB (Weaving Analysis)	E
9045	4	23.325393	CD ROAD I-20 EB (Weaving Analysis)	E
9045	5	23.582476	CD ROAD I-20 EB (Weaving Analysis)	E
9045	6	24.059564	CD ROAD I-20 EB (Weaving Analysis)	E
9045	7	24.036081	CD ROAD I-20 EB (Weaving Analysis)	E
9045	8	23.411911	CD ROAD I-20 EB (Weaving Analysis)	E
9045	9	24.307996	CD ROAD I-20 EB (Weaving Analysis)	E
9045	10	23.872931	CD ROAD I-20 EB (Weaving Analysis)	E
9052	1	15.209379	CD ROAD I-20 EB (Basic Analysis)	NE
9052	2	14.545262	CD ROAD I-20 EB (Basic Analysis)	NE
9052	3	14.220666	CD ROAD I-20 EB (Basic Analysis)	NE
9052	4	14.437064	CD ROAD I-20 EB (Basic Analysis)	NE
9052	5	13.754293	CD ROAD I-20 EB (Basic Analysis)	NE
9052	6	14.642268	CD ROAD I-20 EB (Basic Analysis)	NE
9052	7	14.507953	CD ROAD I-20 EB (Basic Analysis)	NE
9052	8	13.55655	CD ROAD I-20 EB (Basic Analysis)	NE
9052	9	13.27113	CD ROAD I-20 EB (Basic Analysis)	NE
9052	10	13.509913	CD ROAD I-20 EB (Basic Analysis)	NE
9054	1	11.858925	I-20 WB (Basic Analysis)	SW
9054	2	12.36452	I-20 WB (Basic Analysis)	SW
9054	3	11.453671	I-20 WB (Basic Analysis)	SW
9054	4	11.336996	I-20 WB (Basic Analysis)	SW
9054	5	11.933598	I-20 WB (Basic Analysis)	SW
9054	6	11.724359	I-20 WB (Basic Analysis)	SW
9054	7	12.166172	I-20 WB (Basic Analysis)	SW
9054	8	12.152948	I-20 WB (Basic Analysis)	SW
9054	9	12.159171	I-20 WB (Basic Analysis)	SW
9054	10	12.101611	I-20 WB (Basic Analysis)	SW
9055	1	11.858925	I-20 WB (Basic Analysis)	SW

RPA AM

ID	Run	Density	Name (Type)	Direction
9055	2	12.36452	I-20 WB (Basic Analysis)	SW
9055	3	11.453671	I-20 WB (Basic Analysis)	SW
9055	4	11.336996	I-20 WB (Basic Analysis)	SW
9055	5	11.933598	I-20 WB (Basic Analysis)	SW
9055	6	11.724359	I-20 WB (Basic Analysis)	SW
9055	7	12.166172	I-20 WB (Basic Analysis)	SW
9055	8	12.152948	I-20 WB (Basic Analysis)	SW
9055	9	12.159171	I-20 WB (Basic Analysis)	SW
9055	10	12.101611	I-20 WB (Basic Analysis)	SW
9059	1	111.860026	I-20 WB (Merge Analysis)	SW
9059	2	97.411191	I-20 WB (Merge Analysis)	SW
9059	3	93.526113	I-20 WB (Merge Analysis)	SW
9059	4	91.490572	I-20 WB (Merge Analysis)	SW
9059	5	64.526666	I-20 WB (Merge Analysis)	SW
9059	6	81.474304	I-20 WB (Merge Analysis)	SW
9059	7	107.301115	I-20 WB (Merge Analysis)	SW
9059	8	105.114662	I-20 WB (Merge Analysis)	SW
9059	9	95.273872	I-20 WB (Merge Analysis)	SW
9059	10	72.233648	I-20 WB (Merge Analysis)	SW
9061	1	16.754672	I-20 EB (Basic Analysis)	NE
9061	2	16.145784	I-20 EB (Basic Analysis)	NE
9061	3	16.558727	I-20 EB (Basic Analysis)	NE
9061	4	16.101429	I-20 EB (Basic Analysis)	NE
9061	5	15.866464	I-20 EB (Basic Analysis)	NE
9061	6	16.499214	I-20 EB (Basic Analysis)	NE
9061	7	16.573606	I-20 EB (Basic Analysis)	NE
9061	8	16.484336	I-20 EB (Basic Analysis)	NE
9061	9	16.097499	I-20 EB (Basic Analysis)	NE
9061	10	16.002615	I-20 EB (Basic Analysis)	NE
9063	1	38.469174	I-26 WB (Basic Analysis)	NW
9063	2	38.827614	I-26 WB (Basic Analysis)	NW
9063	3	38.754598	I-26 WB (Basic Analysis)	NW
9063	4	39.916207	I-26 WB (Basic Analysis)	NW
9063	5	38.42271	I-26 WB (Basic Analysis)	NW
9063	6	38.70924	I-26 WB (Basic Analysis)	NW
9063	7	38.889566	I-26 WB (Basic Analysis)	NW
9063	8	37.583033	I-26 WB (Basic Analysis)	NW
9063	9	38.26451	I-26 WB (Basic Analysis)	NW
9063	10	39.02564	I-26 WB (Basic Analysis)	NW
9064	1	56.240783	I-26 WB (Diverge Analysis)	NW
9064	2	39.291988	I-26 WB (Diverge Analysis)	NW
9064	3	41.946654	I-26 WB (Diverge Analysis)	NW
9064	4	64.037581	I-26 WB (Diverge Analysis)	NW
9064	5	56.69545	I-26 WB (Diverge Analysis)	NW
9064	6	57.877583	I-26 WB (Diverge Analysis)	NW
9064	7	37.974922	I-26 WB (Diverge Analysis)	NW
9064	8	37.881055	I-26 WB (Diverge Analysis)	NW
9064	9	37.895722	I-26 WB (Diverge Analysis)	NW
9064	10	38.579188	I-26 WB (Diverge Analysis)	NW
9067	1	21.902689	I-26 EB (Merge Analysis)	SW
9067	2	22.156284	I-26 EB (Merge Analysis)	SW
9067	3	23.668861	I-26 EB (Merge Analysis)	SW
9067	4	21.41888	I-26 EB (Merge Analysis)	SW
9067	5	22.003407	I-26 EB (Merge Analysis)	SW
9067	6	23.712026	I-26 EB (Merge Analysis)	SW
9067	7	22.658078	I-26 EB (Merge Analysis)	SW
9067	8	22.713833	I-26 EB (Merge Analysis)	SW

RPA AM

ID	Run	Density	Name (Type)	Direction
9067	9	23.165268	I-26 EB (Merge Analysis)	SW
9067	10	22.938651	I-26 EB (Merge Analysis)	SW
9089	1	16.645685	I-26 EB (Diverge Analysis)	SE
9089	2	17.337952	I-26 EB (Diverge Analysis)	SE
9089	3	17.134574	I-26 EB (Diverge Analysis)	SE
9089	4	17.203018	I-26 EB (Diverge Analysis)	SE
9089	5	17.165863	I-26 EB (Diverge Analysis)	SE
9089	6	18.579729	I-26 EB (Diverge Analysis)	SE
9089	7	17.66844	I-26 EB (Diverge Analysis)	SE
9089	8	17.969596	I-26 EB (Diverge Analysis)	SE
9089	9	17.558929	I-26 EB (Diverge Analysis)	SE
9089	10	17.212796	I-26 EB (Diverge Analysis)	SE
9110	1	21.902689	I-26 EB (Merge Analysis)	SW
9110	2	22.156284	I-26 EB (Merge Analysis)	SW
9110	3	23.668861	I-26 EB (Merge Analysis)	SW
9110	4	21.41888	I-26 EB (Merge Analysis)	SW
9110	5	22.003407	I-26 EB (Merge Analysis)	SW
9110	6	23.712026	I-26 EB (Merge Analysis)	SW
9110	7	22.658078	I-26 EB (Merge Analysis)	SW
9110	8	22.713833	I-26 EB (Merge Analysis)	SW
9110	9	23.165268	I-26 EB (Merge Analysis)	SW
9110	10	22.938651	I-26 EB (Merge Analysis)	SW
9111	1	21.639867	(Merge Analysis)	SE
9111	2	20.761098	(Merge Analysis)	SE
9111	3	21.683063	(Merge Analysis)	SE
9111	4	21.476532	(Merge Analysis)	SE
9111	5	21.06752	(Merge Analysis)	SE
9111	6	22.024582	(Merge Analysis)	SE
9111	7	22.233813	(Merge Analysis)	SE
9111	8	21.863947	(Merge Analysis)	SE
9111	9	22.479491	(Merge Analysis)	SE
9111	10	21.195758	(Merge Analysis)	SE
9112	1	14.101103	I-26 EB (Basic Analysis)	S
9112	2	15.384589	I-26 EB (Basic Analysis)	S
9112	3	15.429418	I-26 EB (Basic Analysis)	S
9112	4	14.744058	I-26 EB (Basic Analysis)	S
9112	5	15.146497	I-26 EB (Basic Analysis)	S
9112	6	15.374947	I-26 EB (Basic Analysis)	S
9112	7	15.441644	I-26 EB (Basic Analysis)	S
9112	8	15.053203	I-26 EB (Basic Analysis)	S
9112	9	15.539747	I-26 EB (Basic Analysis)	S
9112	10	14.821482	I-26 EB (Basic Analysis)	S
9113	1	18.02202	I-126 NB (Merge+Diverge Analysis)	NW
9113	2	16.156583	I-126 NB (Merge+Diverge Analysis)	NW
9113	3	14.888718	I-126 NB (Merge+Diverge Analysis)	NW
9113	4	16.450626	I-126 NB (Merge+Diverge Analysis)	NW
9113	5	15.328202	I-126 NB (Merge+Diverge Analysis)	NW
9113	6	16.333641	I-126 NB (Merge+Diverge Analysis)	NW
9113	7	16.586582	I-126 NB (Merge+Diverge Analysis)	NW
9113	8	15.928936	I-126 NB (Merge+Diverge Analysis)	NW
9113	9	16.374744	I-126 NB (Merge+Diverge Analysis)	NW
9113	10	15.909965	I-126 NB (Merge+Diverge Analysis)	NW
9114	1	23.68797	I-126 NB (Diverge Analysis)	NW
9114	2	23.850087	I-126 NB (Diverge Analysis)	NW
9114	3	23.277022	I-126 NB (Diverge Analysis)	NW
9114	4	23.224239	I-126 NB (Diverge Analysis)	NW
9114	5	23.498205	I-126 NB (Diverge Analysis)	NW

RPA AM

ID	Run	Density	Name (Type)	Direction
9114	6	23.505745	I-126 NB (Diverge Analysis)	NW
9114	7	22.819575	I-126 NB (Diverge Analysis)	NW
9114	8	23.798562	I-126 NB (Diverge Analysis)	NW
9114	9	24.190659	I-126 NB (Diverge Analysis)	NW
9114	10	23.111134	I-126 NB (Diverge Analysis)	NW
9115	1	21.902689	I-26 EB (Merge Analysis)	SW
9115	2	22.156284	I-26 EB (Merge Analysis)	SW
9115	3	23.668861	I-26 EB (Merge Analysis)	SW
9115	4	21.41888	I-26 EB (Merge Analysis)	SW
9115	5	22.003407	I-26 EB (Merge Analysis)	SW
9115	6	23.712026	I-26 EB (Merge Analysis)	SW
9115	7	22.658078	I-26 EB (Merge Analysis)	SW
9115	8	22.713833	I-26 EB (Merge Analysis)	SW
9115	9	23.165268	I-26 EB (Merge Analysis)	SW
9115	10	22.938651	I-26 EB (Merge Analysis)	SW
9118	1	15.001137	I-26 EB (Diverge Analysis)	SE
9118	2	15.512903	I-26 EB (Diverge Analysis)	SE
9118	3	15.687369	I-26 EB (Diverge Analysis)	SE
9118	4	16.335799	I-26 EB (Diverge Analysis)	SE
9118	5	17.685	I-26 EB (Diverge Analysis)	SE
9118	6	15.091278	I-26 EB (Diverge Analysis)	SE
9118	7	16.01013	I-26 EB (Diverge Analysis)	SE
9118	8	14.532988	I-26 EB (Diverge Analysis)	SE
9118	9	16.891182	I-26 EB (Diverge Analysis)	SE
9118	10	15.521626	I-26 EB (Diverge Analysis)	SE
9119	1	12.65462	I-26 EB (Diverge Analysis)	SE
9119	2	14.266116	I-26 EB (Diverge Analysis)	SE
9119	3	12.648373	I-26 EB (Diverge Analysis)	SE
9119	4	12.4714	I-26 EB (Diverge Analysis)	SE
9119	5	13.000238	I-26 EB (Diverge Analysis)	SE
9119	6	13.853873	I-26 EB (Diverge Analysis)	SE
9119	7	13.325035	I-26 EB (Diverge Analysis)	SE
9119	8	13.699802	I-26 EB (Diverge Analysis)	SE
9119	9	13.868447	I-26 EB (Diverge Analysis)	SE
9119	10	11.413726	I-26 EB (Diverge Analysis)	SE
9120	1	16.542313	I-26 EB (Diverge Analysis)	SE
9120	2	18.738499	I-26 EB (Diverge Analysis)	SE
9120	3	16.674999	I-26 EB (Diverge Analysis)	SE
9120	4	16.681862	I-26 EB (Diverge Analysis)	SE
9120	5	18.260371	I-26 EB (Diverge Analysis)	SE
9120	6	17.013578	I-26 EB (Diverge Analysis)	SE
9120	7	18.045328	I-26 EB (Diverge Analysis)	SE
9120	8	17.754791	I-26 EB (Diverge Analysis)	SE
9120	9	17.789106	I-26 EB (Diverge Analysis)	SE
9120	10	15.757634	I-26 EB (Diverge Analysis)	SE
9121	1	22.540124	I-26 EB (Basic Analysis)	SE
9121	2	26.078577	I-26 EB (Basic Analysis)	SE
9121	3	25.060857	I-26 EB (Basic Analysis)	SE
9121	4	27.198749	I-26 EB (Basic Analysis)	SE
9121	5	27.256707	I-26 EB (Basic Analysis)	SE
9121	6	27.17824	I-26 EB (Basic Analysis)	SE
9121	7	27.298403	I-26 EB (Basic Analysis)	SE
9121	8	25.608152	I-26 EB (Basic Analysis)	SE
9121	9	24.700691	I-26 EB (Basic Analysis)	SE
9121	10	26.515961	I-26 EB (Basic Analysis)	SE
9122	1	21.86506	I-26 EB (Diverge Analysis)	SE
9122	2	23.164526	I-26 EB (Diverge Analysis)	SE

RPA AM

ID	Run	Density	Name (Type)	Direction
9122	3	22.686393	I-26 EB (Diverge Analysis)	SE
9122	4	22.431193	I-26 EB (Diverge Analysis)	SE
9122	5	24.895193	I-26 EB (Diverge Analysis)	SE
9122	6	24.150126	I-26 EB (Diverge Analysis)	SE
9122	7	23.29066	I-26 EB (Diverge Analysis)	SE
9122	8	22.967993	I-26 EB (Diverge Analysis)	SE
9122	9	22.17306	I-26 EB (Diverge Analysis)	SE
9122	10	22.61306	I-26 EB (Diverge Analysis)	SE
9123	1	21.581052	I-26 EB (Weaving Analysis)	SE
9123	2	24.075518	I-26 EB (Weaving Analysis)	SE
9123	3	23.178138	I-26 EB (Weaving Analysis)	SE
9123	4	23.483279	I-26 EB (Weaving Analysis)	SE
9123	5	23.702133	I-26 EB (Weaving Analysis)	SE
9123	6	24.743062	I-26 EB (Weaving Analysis)	SE
9123	7	24.172787	I-26 EB (Weaving Analysis)	SE
9123	8	22.486277	I-26 EB (Weaving Analysis)	SE
9123	9	23.644086	I-26 EB (Weaving Analysis)	SE
9123	10	23.276191	I-26 EB (Weaving Analysis)	SE
9125	1	19.794462	I-26 EB (Basic Analysis)	SE
9125	2	20.73978	I-26 EB (Basic Analysis)	SE
9125	3	19.880775	I-26 EB (Basic Analysis)	SE
9125	4	20.397924	I-26 EB (Basic Analysis)	SE
9125	5	19.663054	I-26 EB (Basic Analysis)	SE
9125	6	20.76548	I-26 EB (Basic Analysis)	SE
9125	7	20.262878	I-26 EB (Basic Analysis)	SE
9125	8	19.787189	I-26 EB (Basic Analysis)	SE
9125	9	20.481085	I-26 EB (Basic Analysis)	SE
9125	10	19.922719	I-26 EB (Basic Analysis)	SE
9126	1	19.794462	I-26 EB (Basic Analysis)	SE
9126	2	20.73978	I-26 EB (Basic Analysis)	SE
9126	3	19.880775	I-26 EB (Basic Analysis)	SE
9126	4	20.397924	I-26 EB (Basic Analysis)	SE
9126	5	19.663054	I-26 EB (Basic Analysis)	SE
9126	6	20.76548	I-26 EB (Basic Analysis)	SE
9126	7	20.262878	I-26 EB (Basic Analysis)	SE
9126	8	19.787189	I-26 EB (Basic Analysis)	SE
9126	9	20.481085	I-26 EB (Basic Analysis)	SE
9126	10	19.922719	I-26 EB (Basic Analysis)	SE
9127	1	25.659435	I-26 EB (Basic Analysis)	SE
9127	2	26.191129	I-26 EB (Basic Analysis)	SE
9127	3	25.824887	I-26 EB (Basic Analysis)	SE
9127	4	27.310737	I-26 EB (Basic Analysis)	SE
9127	5	25.460251	I-26 EB (Basic Analysis)	SE
9127	6	27.787816	I-26 EB (Basic Analysis)	SE
9127	7	28.338785	I-26 EB (Basic Analysis)	SE
9127	8	26.57504	I-26 EB (Basic Analysis)	SE
9127	9	28.973283	I-26 EB (Basic Analysis)	SE
9127	10	26.941282	I-26 EB (Basic Analysis)	SE
9128	1	23.049299	I-26 EB (Diverge Analysis)	SW
9128	2	23.051909	I-26 EB (Diverge Analysis)	SW
9128	3	24.670226	I-26 EB (Diverge Analysis)	SW
9128	4	21.97423	I-26 EB (Diverge Analysis)	SW
9128	5	23.579775	I-26 EB (Diverge Analysis)	SW
9128	6	24.576044	I-26 EB (Diverge Analysis)	SW
9128	7	24.516218	I-26 EB (Diverge Analysis)	SW
9128	8	23.866016	I-26 EB (Diverge Analysis)	SW
9128	9	24.589504	I-26 EB (Diverge Analysis)	SW

RPA AM

ID	Run	Density	Name (Type)	Direction
9128	10	23.856726	I-26 EB (Diverge Analysis)	SW
9130	1	21.639867	(Merge Analysis)	SE
9130	2	20.761098	(Merge Analysis)	SE
9130	3	21.683063	(Merge Analysis)	SE
9130	4	21.476532	(Merge Analysis)	SE
9130	5	21.06752	(Merge Analysis)	SE
9130	6	22.024582	(Merge Analysis)	SE
9130	7	22.233813	(Merge Analysis)	SE
9130	8	21.863947	(Merge Analysis)	SE
9130	9	22.479491	(Merge Analysis)	SE
9130	10	21.195758	(Merge Analysis)	SE
9131	1	10.033219	(Diverge Analysis)	SE
9131	2	11.131193	(Diverge Analysis)	SE
9131	3	9.698293	(Diverge Analysis)	SE
9131	4	10.770056	(Diverge Analysis)	SE
9131	5	10.810829	(Diverge Analysis)	SE
9131	6	11.16323	(Diverge Analysis)	SE
9131	7	10.630261	(Diverge Analysis)	SE
9131	8	11.014697	(Diverge Analysis)	SE
9131	9	11.448645	(Diverge Analysis)	SE
9131	10	11.731148	(Diverge Analysis)	SE
9132	1	13.602256	I-126 SB (Diverge Analysis)	E
9132	2	14.497577	I-126 SB (Diverge Analysis)	E
9132	3	13.597901	I-126 SB (Diverge Analysis)	E
9132	4	14.993949	I-126 SB (Diverge Analysis)	E
9132	5	13.983753	I-126 SB (Diverge Analysis)	E
9132	6	23.285896	I-126 SB (Diverge Analysis)	E
9132	7	15.335563	I-126 SB (Diverge Analysis)	E
9132	8	19.344132	I-126 SB (Diverge Analysis)	E
9132	9	14.119864	I-126 SB (Diverge Analysis)	E
9132	10	19.67362	I-126 SB (Diverge Analysis)	E
9133	1	30.862155	I-126 NB (Basic Analysis)	W
9133	2	31.702993	I-126 NB (Basic Analysis)	W
9133	3	31.28852	I-126 NB (Basic Analysis)	W
9133	4	30.291405	I-126 NB (Basic Analysis)	W
9133	5	30.569136	I-126 NB (Basic Analysis)	W
9133	6	31.015884	I-126 NB (Basic Analysis)	W
9133	7	31.032871	I-126 NB (Basic Analysis)	W
9133	8	31.043063	I-126 NB (Basic Analysis)	W
9133	9	31.013336	I-126 NB (Basic Analysis)	W
9133	10	30.757687	I-126 NB (Basic Analysis)	W
9134	1	31.600791	I-126 NB (Diverge Analysis)	W
9134	2	34.08239	I-126 NB (Diverge Analysis)	W
9134	3	32.54239	I-126 NB (Diverge Analysis)	W
9134	4	32.381057	I-126 NB (Diverge Analysis)	W
9134	5	33.041057	I-126 NB (Diverge Analysis)	W
9134	6	33.98559	I-126 NB (Diverge Analysis)	W
9134	7	32.562924	I-126 NB (Diverge Analysis)	W
9134	8	31.949857	I-126 NB (Diverge Analysis)	W
9134	9	32.25199	I-126 NB (Diverge Analysis)	W
9134	10	32.187457	I-126 NB (Diverge Analysis)	W
9135	1	31.756759	I-126 NB (Basic Analysis)	NW
9135	2	30.883199	I-126 NB (Basic Analysis)	NW
9135	3	31.020357	I-126 NB (Basic Analysis)	NW
9135	4	31.332225	I-126 NB (Basic Analysis)	NW
9135	5	31.307733	I-126 NB (Basic Analysis)	NW
9135	6	30.946879	I-126 NB (Basic Analysis)	NW

RPA AM

ID	Run	Density	Name (Type)	Direction
9135	7	30.680729	I-126 NB (Basic Analysis)	NW
9135	8	31.678384	I-126 NB (Basic Analysis)	NW
9135	9	31.701243	I-126 NB (Basic Analysis)	NW
9135	10	30.817886	I-126 NB (Basic Analysis)	NW
9136	1	31.756759	I-126 NB (Basic Analysis)	NW
9136	2	30.883199	I-126 NB (Basic Analysis)	NW
9136	3	31.020357	I-126 NB (Basic Analysis)	NW
9136	4	31.332225	I-126 NB (Basic Analysis)	NW
9136	5	31.307733	I-126 NB (Basic Analysis)	NW
9136	6	30.946879	I-126 NB (Basic Analysis)	NW
9136	7	30.680729	I-126 NB (Basic Analysis)	NW
9136	8	31.678384	I-126 NB (Basic Analysis)	NW
9136	9	31.701243	I-126 NB (Basic Analysis)	NW
9136	10	30.817886	I-126 NB (Basic Analysis)	NW
9137	1	33.025391	I-26 WB (Diverge Analysis)	N
9137	2	32.338997	I-26 WB (Diverge Analysis)	N
9137	3	32.943824	I-26 WB (Diverge Analysis)	N
9137	4	32.800697	I-26 WB (Diverge Analysis)	N
9137	5	32.249735	I-26 WB (Diverge Analysis)	N
9137	6	32.163551	I-26 WB (Diverge Analysis)	N
9137	7	32.648336	I-26 WB (Diverge Analysis)	N
9137	8	31.935779	I-26 WB (Diverge Analysis)	N
9137	9	33.223921	I-26 WB (Diverge Analysis)	N
9137	10	32.128154	I-26 WB (Diverge Analysis)	N
9138	1	19.956095	I-26 WB (Basic Analysis)	N
9138	2	20.214651	I-26 WB (Basic Analysis)	N
9138	3	20.250431	I-26 WB (Basic Analysis)	N
9138	4	20.511687	I-26 WB (Basic Analysis)	N
9138	5	20.74054	I-26 WB (Basic Analysis)	N
9138	6	20.453293	I-26 WB (Basic Analysis)	N
9138	7	20.064446	I-26 WB (Basic Analysis)	N
9138	8	19.681674	I-26 WB (Basic Analysis)	N
9138	9	20.352706	I-26 WB (Basic Analysis)	N
9138	10	20.388485	I-26 WB (Basic Analysis)	N
9139	1	19.956095	I-26 WB (Basic Analysis)	N
9139	2	20.214651	I-26 WB (Basic Analysis)	N
9139	3	20.250431	I-26 WB (Basic Analysis)	N
9139	4	20.511687	I-26 WB (Basic Analysis)	N
9139	5	20.74054	I-26 WB (Basic Analysis)	N
9139	6	20.453293	I-26 WB (Basic Analysis)	N
9139	7	20.064446	I-26 WB (Basic Analysis)	N
9139	8	19.681674	I-26 WB (Basic Analysis)	N
9139	9	20.352706	I-26 WB (Basic Analysis)	N
9139	10	20.388485	I-26 WB (Basic Analysis)	N
9140	1	23.435954	I-26 WB (Basic Analysis)	NW
9140	2	23.461335	I-26 WB (Basic Analysis)	NW
9140	3	22.727514	I-26 WB (Basic Analysis)	NW
9140	4	23.367381	I-26 WB (Basic Analysis)	NW
9140	5	23.411018	I-26 WB (Basic Analysis)	NW
9140	6	23.644345	I-26 WB (Basic Analysis)	NW
9140	7	23.419033	I-26 WB (Basic Analysis)	NW
9140	8	23.283668	I-26 WB (Basic Analysis)	NW
9140	9	23.3892	I-26 WB (Basic Analysis)	NW
9140	10	23.297027	I-26 WB (Basic Analysis)	NW
9141	1	23.435954	I-26 WB (Basic Analysis)	NW
9141	2	23.461335	I-26 WB (Basic Analysis)	NW
9141	3	22.727514	I-26 WB (Basic Analysis)	NW

RPA AM

ID	Run	Density	Name (Type)	Direction
9141	4	23.367381	I-26 WB (Basic Analysis)	NW
9141	5	23.411018	I-26 WB (Basic Analysis)	NW
9141	6	23.644345	I-26 WB (Basic Analysis)	NW
9141	7	23.419033	I-26 WB (Basic Analysis)	NW
9141	8	23.283668	I-26 WB (Basic Analysis)	NW
9141	9	23.3892	I-26 WB (Basic Analysis)	NW
9141	10	23.297027	I-26 WB (Basic Analysis)	NW
9142	1	54.945739	I-26 WB (Basic Analysis)	NW
9142	2	56.785716	I-26 WB (Basic Analysis)	NW
9142	3	55.430251	I-26 WB (Basic Analysis)	NW
9142	4	52.484744	I-26 WB (Basic Analysis)	NW
9142	5	54.509985	I-26 WB (Basic Analysis)	NW
9142	6	56.457981	I-26 WB (Basic Analysis)	NW
9142	7	56.50674	I-26 WB (Basic Analysis)	NW
9142	8	56.577081	I-26 WB (Basic Analysis)	NW
9142	9	58.612672	I-26 WB (Basic Analysis)	NW
9142	10	50.353349	I-26 WB (Basic Analysis)	NW
9143	1	45.422006	I-26 WB (Basic Analysis)	NW
9143	2	46.236181	I-26 WB (Basic Analysis)	NW
9143	3	45.366349	I-26 WB (Basic Analysis)	NW
9143	4	53.399701	I-26 WB (Basic Analysis)	NW
9143	5	46.89025	I-26 WB (Basic Analysis)	NW
9143	6	49.427061	I-26 WB (Basic Analysis)	NW
9143	7	45.989272	I-26 WB (Basic Analysis)	NW
9143	8	44.138725	I-26 WB (Basic Analysis)	NW
9143	9	46.319976	I-26 WB (Basic Analysis)	NW
9143	10	44.510196	I-26 WB (Basic Analysis)	NW
9147	1	40.911476	I-26 WB (Basic Analysis)	NW
9147	2	39.298155	I-26 WB (Basic Analysis)	NW
9147	3	43.881797	I-26 WB (Basic Analysis)	NW
9147	4	39.657076	I-26 WB (Basic Analysis)	NW
9147	5	42.070751	I-26 WB (Basic Analysis)	NW
9147	6	40.922482	I-26 WB (Basic Analysis)	NW
9147	7	47.336353	I-26 WB (Basic Analysis)	NW
9147	8	42.832021	I-26 WB (Basic Analysis)	NW
9147	9	40.94237	I-26 WB (Basic Analysis)	NW
9147	10	46.76004	I-26 WB (Basic Analysis)	NW
9148	1	41.189854	I-26 WB (Diverge Analysis)	NW
9148	2	39.233322	I-26 WB (Diverge Analysis)	NW
9148	3	44.234654	I-26 WB (Diverge Analysis)	NW
9148	4	39.758388	I-26 WB (Diverge Analysis)	NW
9148	5	42.119721	I-26 WB (Diverge Analysis)	NW
9148	6	40.884788	I-26 WB (Diverge Analysis)	NW
9148	7	47.329319	I-26 WB (Diverge Analysis)	NW
9148	8	42.864787	I-26 WB (Diverge Analysis)	NW
9148	9	41.406921	I-26 WB (Diverge Analysis)	NW
9148	10	43.093587	I-26 WB (Diverge Analysis)	NW
9149	1	23.175964	I-26 WB (Diverge Analysis)	NW
9149	2	23.647485	I-26 WB (Diverge Analysis)	NW
9149	3	24.685783	I-26 WB (Diverge Analysis)	NW
9149	4	23.183108	I-26 WB (Diverge Analysis)	NW
9149	5	25.640732	I-26 WB (Diverge Analysis)	NW
9149	6	24.400013	I-26 WB (Diverge Analysis)	NW
9149	7	24.504795	I-26 WB (Diverge Analysis)	NW
9149	8	23.711783	I-26 WB (Diverge Analysis)	NW
9149	9	25.82172	I-26 WB (Diverge Analysis)	NW
9149	10	24.750082	I-26 WB (Diverge Analysis)	NW

RPA AM

ID	Run	Density	Name (Type)	Direction
9151	1	20.271454	I-20 EB (Diverge Analysis)	NE
9151	2	19.339286	I-20 EB (Diverge Analysis)	NE
9151	3	19.73568	I-20 EB (Diverge Analysis)	NE
9151	4	18.391301	I-20 EB (Diverge Analysis)	NE
9151	5	18.975512	I-20 EB (Diverge Analysis)	NE
9151	6	18.516842	I-20 EB (Diverge Analysis)	NE
9151	7	19.139606	I-20 EB (Diverge Analysis)	NE
9151	8	19.689219	I-20 EB (Diverge Analysis)	NE
9151	9	18.761993	I-20 EB (Diverge Analysis)	NE
9151	10	19.657587	I-20 EB (Diverge Analysis)	NE
9152	1	16.754672	I-20 EB (Basic Analysis)	NE
9152	2	16.145784	I-20 EB (Basic Analysis)	NE
9152	3	16.558727	I-20 EB (Basic Analysis)	NE
9152	4	16.101429	I-20 EB (Basic Analysis)	NE
9152	5	15.866464	I-20 EB (Basic Analysis)	NE
9152	6	16.499214	I-20 EB (Basic Analysis)	NE
9152	7	16.573606	I-20 EB (Basic Analysis)	NE
9152	8	16.484336	I-20 EB (Basic Analysis)	NE
9152	9	16.097499	I-20 EB (Basic Analysis)	NE
9152	10	16.002615	I-20 EB (Basic Analysis)	NE
9153	1	16.754672	I-20 EB (Basic Analysis)	NE
9153	2	16.145784	I-20 EB (Basic Analysis)	NE
9153	3	16.558727	I-20 EB (Basic Analysis)	NE
9153	4	16.101429	I-20 EB (Basic Analysis)	NE
9153	5	15.866464	I-20 EB (Basic Analysis)	NE
9153	6	16.499214	I-20 EB (Basic Analysis)	NE
9153	7	16.573606	I-20 EB (Basic Analysis)	NE
9153	8	16.484336	I-20 EB (Basic Analysis)	NE
9153	9	16.097499	I-20 EB (Basic Analysis)	NE
9153	10	16.002615	I-20 EB (Basic Analysis)	NE
9155	1	38.145301	I-20 EB (Basic Analysis)	NE
9155	2	38.21376	I-20 EB (Basic Analysis)	NE
9155	3	35.69342	I-20 EB (Basic Analysis)	NE
9155	4	36.059237	I-20 EB (Basic Analysis)	NE
9155	5	37.390883	I-20 EB (Basic Analysis)	NE
9155	6	37.275152	I-20 EB (Basic Analysis)	NE
9155	7	37.98798	I-20 EB (Basic Analysis)	NE
9155	8	36.345593	I-20 EB (Basic Analysis)	NE
9155	9	37.245972	I-20 EB (Basic Analysis)	NE
9155	10	36.431462	I-20 EB (Basic Analysis)	NE
9156	1	35.829193	I-20 EB (Basic Analysis)	NE
9156	2	35.7091	I-20 EB (Basic Analysis)	NE
9156	3	34.097577	I-20 EB (Basic Analysis)	NE
9156	4	34.782338	I-20 EB (Basic Analysis)	NE
9156	5	35.510152	I-20 EB (Basic Analysis)	NE
9156	6	35.845961	I-20 EB (Basic Analysis)	NE
9156	7	35.815598	I-20 EB (Basic Analysis)	NE
9156	8	35.662875	I-20 EB (Basic Analysis)	NE
9156	9	34.946844	I-20 EB (Basic Analysis)	NE
9156	10	35.10138	I-20 EB (Basic Analysis)	NE
9157	1	73.890644	I-20 WB (Diverge Analysis)	SW
9157	2	67.891979	I-20 WB (Diverge Analysis)	SW
9157	3	70.672779	I-20 WB (Diverge Analysis)	SW
9157	4	75.694644	I-20 WB (Diverge Analysis)	SW
9157	5	73.259978	I-20 WB (Diverge Analysis)	SW
9157	6	70.731445	I-20 WB (Diverge Analysis)	SW
9157	7	72.060245	I-20 WB (Diverge Analysis)	SW

RPA AM

ID	Run	Density	Name (Type)	Direction
9157	8	71.564512	I-20 WB (Diverge Analysis)	SW
9157	9	73.875978	I-20 WB (Diverge Analysis)	SW
9157	10	72.318379	I-20 WB (Diverge Analysis)	SW
9158	1	39.097776	I-20 WB (Basic Analysis)	SW
9158	2	39.726475	I-20 WB (Basic Analysis)	SW
9158	3	37.389193	I-20 WB (Basic Analysis)	SW
9158	4	38.513346	I-20 WB (Basic Analysis)	SW
9158	5	38.779105	I-20 WB (Basic Analysis)	SW
9158	6	40.170337	I-20 WB (Basic Analysis)	SW
9158	7	38.46213	I-20 WB (Basic Analysis)	SW
9158	8	38.991124	I-20 WB (Basic Analysis)	SW
9158	9	38.022282	I-20 WB (Basic Analysis)	SW
9158	10	37.818311	I-20 WB (Basic Analysis)	SW
9159	1	11.815463	I-20 WB (Basic Analysis)	W
9159	2	11.92464	I-20 WB (Basic Analysis)	W
9159	3	12.139344	I-20 WB (Basic Analysis)	W
9159	4	11.899137	I-20 WB (Basic Analysis)	W
9159	5	12.336188	I-20 WB (Basic Analysis)	W
9159	6	13.119491	I-20 WB (Basic Analysis)	W
9159	7	13.169798	I-20 WB (Basic Analysis)	W
9159	8	12.482566	I-20 WB (Basic Analysis)	W
9159	9	13.440172	I-20 WB (Basic Analysis)	W
9159	10	12.066291	I-20 WB (Basic Analysis)	W
9160	1	133.556309	I-20 WB (Merge Analysis)	SW
9160	2	119.193278	I-20 WB (Merge Analysis)	SW
9160	3	120.174013	I-20 WB (Merge Analysis)	SW
9160	4	124.353063	I-20 WB (Merge Analysis)	SW
9160	5	104.333099	I-20 WB (Merge Analysis)	SW
9160	6	106.990576	I-20 WB (Merge Analysis)	SW
9160	7	132.10705	I-20 WB (Merge Analysis)	SW
9160	8	127.369087	I-20 WB (Merge Analysis)	SW
9160	9	121.923067	I-20 WB (Merge Analysis)	SW
9160	10	106.253895	I-20 WB (Merge Analysis)	SW
9162	1	14.918182	I-20 WB (Merge Analysis)	SW
9162	2	16.260867	I-20 WB (Merge Analysis)	SW
9162	3	16.584964	I-20 WB (Merge Analysis)	SW
9162	4	16.701931	I-20 WB (Merge Analysis)	SW
9162	5	16.03668	I-20 WB (Merge Analysis)	SW
9162	6	15.987944	I-20 WB (Merge Analysis)	SW
9162	7	16.333972	I-20 WB (Merge Analysis)	SW
9162	8	16.217004	I-20 WB (Merge Analysis)	SW
9162	9	15.641916	I-20 WB (Merge Analysis)	SW
9162	10	16.372961	I-20 WB (Merge Analysis)	SW
9163	1	19.32405	I-20 WB (Merge Analysis)	S
9163	2	19.52454	I-20 WB (Merge Analysis)	S
9163	3	18.7475	I-20 WB (Merge Analysis)	S
9163	4	19.233433	I-20 WB (Merge Analysis)	S
9163	5	20.024065	I-20 WB (Merge Analysis)	S
9163	6	19.267414	I-20 WB (Merge Analysis)	S
9163	7	18.746367	I-20 WB (Merge Analysis)	S
9163	8	20.227953	I-20 WB (Merge Analysis)	S
9163	9	18.713519	I-20 WB (Merge Analysis)	S
9163	10	19.868884	I-20 WB (Merge Analysis)	S
9182	1	13.019636	I-26 EB (Merge Analysis)	S
9182	2	12.892708	I-26 EB (Merge Analysis)	S
9182	3	13.017897	I-26 EB (Merge Analysis)	S
9182	4	12.276327	I-26 EB (Merge Analysis)	S

RPA AM

ID	Run	Density	Name (Type)	Direction
9182	5	12.950956	I-26 EB (Merge Analysis)	S
9182	6	13.287401	I-26 EB (Merge Analysis)	S
9182	7	13.388247	I-26 EB (Merge Analysis)	S
9182	8	13.083969	I-26 EB (Merge Analysis)	S
9182	9	13.609066	I-26 EB (Merge Analysis)	S
9182	10	13.0405	I-26 EB (Merge Analysis)	S
9183	1	11.753813	I-20 EB (Basic Analysis)	E
9183	2	10.622812	I-20 EB (Basic Analysis)	E
9183	3	10.823741	I-20 EB (Basic Analysis)	E
9183	4	10.534776	I-20 EB (Basic Analysis)	E
9183	5	10.940259	I-20 EB (Basic Analysis)	E
9183	6	11.144295	I-20 EB (Basic Analysis)	E
9183	7	11.025705	I-20 EB (Basic Analysis)	E
9183	8	10.947509	I-20 EB (Basic Analysis)	E
9183	9	10.882259	I-20 EB (Basic Analysis)	E
9183	10	10.642491	I-20 EB (Basic Analysis)	E
9185	1	125.722346	I-20 WB (Basic Analysis)	SW
9185	2	118.748204	I-20 WB (Basic Analysis)	SW
9185	3	120.892438	I-20 WB (Basic Analysis)	SW
9185	4	126.387631	I-20 WB (Basic Analysis)	SW
9185	5	110.638265	I-20 WB (Basic Analysis)	SW
9185	6	116.58289	I-20 WB (Basic Analysis)	SW
9185	7	128.040756	I-20 WB (Basic Analysis)	SW
9185	8	122.769327	I-20 WB (Basic Analysis)	SW
9185	9	119.397517	I-20 WB (Basic Analysis)	SW
9185	10	114.442693	I-20 WB (Basic Analysis)	SW
9186	1	125.722346	I-20 WB (Basic Analysis)	SW
9186	2	118.748204	I-20 WB (Basic Analysis)	SW
9186	3	120.892438	I-20 WB (Basic Analysis)	SW
9186	4	126.387631	I-20 WB (Basic Analysis)	SW
9186	5	110.638265	I-20 WB (Basic Analysis)	SW
9186	6	116.58289	I-20 WB (Basic Analysis)	SW
9186	7	128.040756	I-20 WB (Basic Analysis)	SW
9186	8	122.769327	I-20 WB (Basic Analysis)	SW
9186	9	119.397517	I-20 WB (Basic Analysis)	SW
9186	10	114.442693	I-20 WB (Basic Analysis)	SW
9204	1	29.492144	CD ROAD I-26 EB (Basic Analysis)	SE
9204	2	30.662125	CD ROAD I-26 EB (Basic Analysis)	SE
9204	3	29.246182	CD ROAD I-26 EB (Basic Analysis)	SE
9204	4	28.917126	CD ROAD I-26 EB (Basic Analysis)	SE
9204	5	29.222916	CD ROAD I-26 EB (Basic Analysis)	SE
9204	6	31.149062	CD ROAD I-26 EB (Basic Analysis)	SE
9204	7	28.905492	CD ROAD I-26 EB (Basic Analysis)	SE
9204	8	28.011388	CD ROAD I-26 EB (Basic Analysis)	SE
9204	9	28.844002	CD ROAD I-26 EB (Basic Analysis)	SE
9204	10	28.300559	CD ROAD I-26 EB (Basic Analysis)	SE
9206	1	14.101103	I-26 EB (Basic Analysis)	S
9206	2	15.384589	I-26 EB (Basic Analysis)	S
9206	3	15.429418	I-26 EB (Basic Analysis)	S
9206	4	14.744058	I-26 EB (Basic Analysis)	S
9206	5	15.146497	I-26 EB (Basic Analysis)	S
9206	6	15.374947	I-26 EB (Basic Analysis)	S
9206	7	15.441644	I-26 EB (Basic Analysis)	S
9206	8	15.053203	I-26 EB (Basic Analysis)	S
9206	9	15.539747	I-26 EB (Basic Analysis)	S
9206	10	14.821482	I-26 EB (Basic Analysis)	S
9207	1	14.101103	I-26 EB (Basic Analysis)	S

RPA AM

ID	Run	Density	Name (Type)	Direction
9207	2	15.384589	I-26 EB (Basic Analysis)	S
9207	3	15.429418	I-26 EB (Basic Analysis)	S
9207	4	14.744058	I-26 EB (Basic Analysis)	S
9207	5	15.146497	I-26 EB (Basic Analysis)	S
9207	6	15.374947	I-26 EB (Basic Analysis)	S
9207	7	15.441644	I-26 EB (Basic Analysis)	S
9207	8	15.053203	I-26 EB (Basic Analysis)	S
9207	9	15.539747	I-26 EB (Basic Analysis)	S
9207	10	14.821482	I-26 EB (Basic Analysis)	S
9208	1	17.699753	(Basic Analysis)	SE
9208	2	16.670983	(Basic Analysis)	SE
9208	3	17.704652	(Basic Analysis)	SE
9208	4	17.738945	(Basic Analysis)	SE
9208	5	16.433386	(Basic Analysis)	SE
9208	6	16.688129	(Basic Analysis)	SE
9208	7	18.532568	(Basic Analysis)	SE
9208	8	17.905507	(Basic Analysis)	SE
9208	9	17.748742	(Basic Analysis)	SE
9208	10	17.349481	(Basic Analysis)	SE
9211	1	11.911568	I-20 EB (Basic Analysis)	NE
9211	2	10.762776	I-20 EB (Basic Analysis)	NE
9211	3	10.786783	I-20 EB (Basic Analysis)	NE
9211	4	10.342658	I-20 EB (Basic Analysis)	NE
9211	5	10.860215	I-20 EB (Basic Analysis)	NE
9211	6	11.000019	I-20 EB (Basic Analysis)	NE
9211	7	11.164535	I-20 EB (Basic Analysis)	NE
9211	8	11.146883	I-20 EB (Basic Analysis)	NE
9211	9	10.968951	I-20 EB (Basic Analysis)	NE
9211	10	10.855272	I-20 EB (Basic Analysis)	NE
9225	1	16.754672	I-20 EB (Basic Analysis)	NE
9225	2	16.145784	I-20 EB (Basic Analysis)	NE
9225	3	16.558727	I-20 EB (Basic Analysis)	NE
9225	4	16.101429	I-20 EB (Basic Analysis)	NE
9225	5	15.866464	I-20 EB (Basic Analysis)	NE
9225	6	16.499214	I-20 EB (Basic Analysis)	NE
9225	7	16.573606	I-20 EB (Basic Analysis)	NE
9225	8	16.484336	I-20 EB (Basic Analysis)	NE
9225	9	16.097499	I-20 EB (Basic Analysis)	NE
9225	10	16.002615	I-20 EB (Basic Analysis)	NE
9243	1	39.097776	I-20 WB (Basic Analysis)	SW
9243	2	39.726475	I-20 WB (Basic Analysis)	SW
9243	3	37.389193	I-20 WB (Basic Analysis)	SW
9243	4	38.513346	I-20 WB (Basic Analysis)	SW
9243	5	38.779105	I-20 WB (Basic Analysis)	SW
9243	6	40.170337	I-20 WB (Basic Analysis)	SW
9243	7	38.46213	I-20 WB (Basic Analysis)	SW
9243	8	38.991124	I-20 WB (Basic Analysis)	SW
9243	9	38.022282	I-20 WB (Basic Analysis)	SW
9243	10	37.818311	I-20 WB (Basic Analysis)	SW
9245	1	24.131767	CD ROAD I-20 WB TO I-20 (Basic Analysis)	NW
9245	2	24.51982	CD ROAD I-20 WB TO I-20 (Basic Analysis)	NW
9245	3	23.758205	CD ROAD I-20 WB TO I-20 (Basic Analysis)	NW
9245	4	23.943376	CD ROAD I-20 WB TO I-20 (Basic Analysis)	NW
9245	5	23.579475	CD ROAD I-20 WB TO I-20 (Basic Analysis)	NW
9245	6	23.386254	CD ROAD I-20 WB TO I-20 (Basic Analysis)	NW
9245	7	23.843545	CD ROAD I-20 WB TO I-20 (Basic Analysis)	NW
9245	8	22.584384	CD ROAD I-20 WB TO I-20 (Basic Analysis)	NW

RPA AM

ID	Run	Density	Name (Type)	Direction
9245	9	24.212276	CD ROAD I-20 WB TO I-20 (Basic Analysis)	NW
9245	10	22.983709	CD ROAD I-20 WB TO I-20 (Basic Analysis)	NW
9246	1	18.188025	I-126 NB (Diverge Analysis)	NW
9246	2	16.305405	I-126 NB (Diverge Analysis)	NW
9246	3	15.025861	I-126 NB (Diverge Analysis)	NW
9246	4	16.622896	I-126 NB (Diverge Analysis)	NW
9246	5	15.469394	I-126 NB (Diverge Analysis)	NW
9246	6	16.497632	I-126 NB (Diverge Analysis)	NW
9246	7	16.767305	I-126 NB (Diverge Analysis)	NW
9246	8	16.075661	I-126 NB (Diverge Analysis)	NW
9246	9	16.525575	I-126 NB (Diverge Analysis)	NW
9246	10	16.056516	I-126 NB (Diverge Analysis)	NW
9248	1	28.109286	I-26 WB (Basic Analysis)	NW
9248	2	28.249428	I-26 WB (Basic Analysis)	NW
9248	3	28.347983	I-26 WB (Basic Analysis)	NW
9248	4	27.695762	I-26 WB (Basic Analysis)	NW
9248	5	27.970469	I-26 WB (Basic Analysis)	NW
9248	6	28.257832	I-26 WB (Basic Analysis)	NW
9248	7	27.867198	I-26 WB (Basic Analysis)	NW
9248	8	27.406342	I-26 WB (Basic Analysis)	NW
9248	9	28.213458	I-26 WB (Basic Analysis)	NW
9248	10	28.059986	I-26 WB (Basic Analysis)	NW
9249	1	16.366581	I-26 EB (Basic Analysis)	SE
9249	2	17.064354	I-26 EB (Basic Analysis)	SE
9249	3	16.480922	I-26 EB (Basic Analysis)	SE
9249	4	16.844498	I-26 EB (Basic Analysis)	SE
9249	5	16.793503	I-26 EB (Basic Analysis)	SE
9249	6	16.778019	I-26 EB (Basic Analysis)	SE
9249	7	17.034505	I-26 EB (Basic Analysis)	SE
9249	8	16.734856	I-26 EB (Basic Analysis)	SE
9249	9	17.060276	I-26 EB (Basic Analysis)	SE
9249	10	16.959894	I-26 EB (Basic Analysis)	SE

Appendix D—2040 Build Unconstrained Summary

TransModeler 2040 Build RRPA (unconstrained) Freeway Density Tables

Mainline

Freeway Segment	Existing Conditions				2040 No Build Conditions				2040 Build RRPA Conditions (unconstrained)			
	AM Peak Hour		PM Peak Hour		AM Peak Hour		PM Peak Hour		AM Peak Hour		PM Peak Hour	
	LOS[1]	Density[2]	LOS[1]	Density[2]	LOS[1]	Density[2]	LOS[1]	Density[2]	LOS[1]	Density[2]	LOS[1]	Density[2]
I 26 Eastbound												
west of Exit 101	F	50.0	D	27.3	F	69.0	B	16.8	D	28.4	B	16.6
Exit 101 to Exit 102[W]	C	25.8	B	18.5	F	133.5	C	24.0	E	37.0	B	19.2
Exit 102 to Exit 103	F	48.8	C	24.7	F	122.0	D	31.4	E	41.7	C	25.1
Exit 103 to Exit 104	E	44.3	C	24.1	F	126.6	D	31.2	E	35.8	C	23.2
Exit 104 to Exit 106	F	67.8	E	40.4	F	84.5	F	59.9	D	28.3	C	20.0
Exit 107 to Exit 108[W]	F	85.7	D	31.3	F	108.7	F	72.3	E	36.7	C	20.4
Exit 106 to Exit 107[W]	F	74.3	E	36.9	F	94.6	F	103.9				
I-126 Diverge to I-126 Merge	D	31.2	F	53.4	E	36.6	F	112.9				
Exit 108 to Exit 110	D	26.3	F	94.6	E	38.6	F	123.7	C	20.3	C	22.9
east of Exit 110	C	19.7	C	23.3	C	20.2	C	24.3	C	20.8	C	25.9
I 26 Westbound												
east of Exit 110	C	21.1	C	23.3	E	36.7	F	93.3	D	32.1	D	29.8
Exit 110 to Exit 108	B	15.6	C	25.1	C	19.9	F	92.5	B	17.1	C	20.3
I-126 Diverge to I-126 Merge	D	33.7	F	97.7	E	44.1	F	155.1	B	15.4	B	16.4
Exit 108 to Exit 107[W]	D	34.7	F	98.7	F	45.1	F	156.1	C	21.8	D	34.0
Exit 107 to Exit 106[W]	D	34.7	F	98.7	F	45.1	F	156.1				
I-26 Merge to Exit 106	-	-	-	-	-	-	-	-				
Exit 106 to Exit 104	D	33.7	F	49.3	F	47.2	F	50.7	D	27.3	F	51.8
Exit 104 to Exit 103	D	27.0	E	43.3	D	34.2	F	45.9	C	20.9	E	35.3
Exit 103 to Exit 102	D	27.2	E	38.0	D	30.4	E	39.1	C	23.6	E	43.9
Exit 102 to Exit 101[W]	B	15.3	F	55.0	C	20.1	C	25.4	B	17.6	D	29.5
West of Exit 101	C	23.4	E	36.1	B	14.9	C	19.1	B	16.4	D	28.5

[1] Per Highway Capacity Manual 2010 criteria.

[2] Density expressed as PCE/per mile/per lane.

[W] Weaving Section

Mainline

Freeway Segment	Existing Conditions				2040 No Build Conditions				2040 Build RRPA Conditions (unconstrained)			
	AM Peak Hour		PM Peak Hour		AM Peak Hour		PM Peak Hour		AM Peak Hour		PM Peak Hour	
	LOS[1]	Density[2]	LOS[1]	Density[2]	LOS[1]	Density[2]	LOS[1]	Density[2]	LOS[1]	Density[2]	LOS[1]	Density[2]
I 20 Eastbound												
west of Exit 61	E	43.6	C	20.9	F	61.7	C	19.6	E	38.0	C	19.6
Exit 61 to Exit 63	D	32.6	C	18.7	F	75.9	C	24.8	D	31.6	B	16.6
Exit 63 to Exit 64	C	19.0	B	13.5	C	20.7	D	29.3	C	18.6	B	11.0
Exit 64 to Exit 65	C	25.3	C	22.5	D	28.0	F	68.8				
Exit 65 to Exit 68	E	35.5	D	26.6	E	39.5	D	29.5	E	39.9	D	27.4
east of Exit 68	D	31.3	D	26.4	D	34.9	D	29.8	D	30.6	E	35.9
I 20 Westbound												
east of Exit 68	D	30.2	D	34.2	E	40.3	F	117.7	D	26.9	F	54.4
Exit 68 to Exit 65	D	29.3	F	56.8	F	46.7	F	123.4	D	30.9	D	34.6
Exit 65 to Exit 64	E	36.5	F	58.7	F	73.0	F	58.4	A	8.7	A	7.9
Exit 64 to Exit 63[W]	B	15.5	F	51.5	F	49.6	F	56.3				
Exit 63 to Exit 61	B	14.6	D	26.6	C	18.8	D	26.2	B	15.0	E	41.3
west of Exit 61	B	15.5	D	33.3	B	14.2	C	22.1	B	15.2	D	27.6

[1] Per Highway Capacity Manual 2010 criteria.

[2] Density expressed as PCE/per mile/per lane.

Mainline

Freeway Segment	Existing Conditions				2040 No Build Conditions				2040 Build RRPA Conditions (unconstrained)			
	AM Peak Hour		PM Peak Hour		AM Peak Hour		PM Peak Hour		AM Peak Hour		PM Peak Hour	
	LOS[1]	Density[2]	LOS[1]	Density[2]	LOS[1]	Density[2]	LOS[1]	Density[2]	LOS[1]	Density[2]	LOS[1]	Density[2]
I 126 Eastbound												
I-26 to Colonial Life Blvd	D	29.4	B	15.3	D	29.7	B	17.3	D	29.4	B	11.1
Colonial Life Blvd to Greystone Blvd	C	24.9	B	13.7	C	25.1	B	15.0	E	38.0	B	17.8
Greystone Blvd to Huger St	D	26.5	B	13.2	D	26.8	B	15.1	F	48.7	B	16.7
I 126 Westbound												
Huger St to Greystone Blvd	B	13.8	C	25.8	B	15.3	F	87.3	B	15.4	D	31.2
Greystone Blvd to Colonial Life Blvd	B	14.4	F	48.6	B	13.4	F	113.2	B	14.3	D	30.7
Colonial Life Blvd to I-26	C	19.1	F	90.7	C	24.7	F	115.9	B	12.4	D	29.9

[1] Per Highway Capacity Manual 2010 criteria.

[2] Density expressed as PCE/per mile/per lane.

Merge

Merge Area	Existing Conditions				2040 No Build Conditions				2040 Build RRPA Conditions (unconstrained)			
	AM Peak Hour		PM Peak Hour		AM Peak Hour		PM Peak Hour		AM Peak Hour		PM Peak Hour	
	LOS[1]	Density[2]	LOS[1]	Density[2]	LOS[1]	Density[2]	LOS[1]	Density[2]	LOS[1]	Density[2]	LOS[1]	Density[2]
I 26 Eastbound												
Exit 102	F	50.0	C	27.3	F	69.0	B	16.8	D	28.4	B	16.6
Exit 103	F	62.3	C	27.3	F	112.3	E	43.6	E	35.8	C	23.2
Exit 104	F	64.5	D	29.5	F	89.2	F	58.1	D	28.3	B	20.0
Exit 106 Loop	F	51.3	D	34.7	F	61.5	F	78.6	E	36.7	C	20.4
Exit 106W	F	85.7	D	31.3	F	108.7	F	72.3				
Exit 107 LoopW	F	51.3	D	34.7	F	61.5	F	78.6	B	13.8	B	13.2
Exit 107W	F	74.3	E	36.9	F	94.6	F	103.9				
Exit 108	D	32.1	F	52.2	E	38.6	F	115.0	-	-	-	-
Exit 108 (I-126)	C	25.5	F	75.8	C	25.2	F	122.0	C	20.3	C	22.9
Exit 110	B	15.2	B	17.5	B	15.3	B	18.6	C	20.8	C	25.9
I 26 Westbound												
Exit 110	B	15.6	C	25.1	B	19.9	F	92.5	B	17.1	C	20.3
Exit 108 (I-126)	D	30.2	F	121.3	E	39.2	F	157.8	B	14.8	C	23.5
Exit 108W	C	24.3	F	100.8	D	31.9	F	128.8	-	-	-	-
Exit 107 LoopW	C	25.9	F	96.4	D	34.8	F	111.7	C	25.8	E	42.4
Exit 107W	C	27.2	F	104.6	E	35.6	F	113.3				
Exit 106	C	23.4	E	36.7	D	32.4	E	37.8	C	27.0	E	45.0
Exit 104	B	18.6	E	37.7	C	24.9	E	43.7	C	20.9	E	35.3
Exit 103	B	19.8	E	35.2	C	27.6	E	36.5	C	23.6	E	43.9
Exit 102W	B	15.3	F	55.0	C	20.1	C	25.4	B	17.6	D	29.5
Exit 101	B	19.1	F	95.6	B	16.1	C	20.6	A	9.6	B	16.1

[1] Per Highway Capacity Manual 2010 criteria.

[2] Density expressed as PCE/per mile/per lane.

[W] Weaving Section

Merge

Merge Area	Existing Conditions				2040 No Build Conditions				2040 Build RRPA Conditions (unconstrained)			
	AM Peak Hour		PM Peak Hour		AM Peak Hour		PM Peak Hour		AM Peak Hour		PM Peak Hour	
	LOS[1]	Density[2]	LOS[1]	Density[2]	LOS[1]	Density[2]	LOS[1]	Density[2]	LOS[1]	Density[2]	LOS[1]	Density[2]
I 20 Eastbound												
Exit 61	D	29.0	B	16.4	F	74.9	C	21.0	D	31.6	B	16.6
Exit 63 Loop	C	21.6	B	14.2	C	24.2	B	19.9	-	-	-	-
Exit 63	B	19.0	B	13.5	C	20.7	D	29.3	-	-	-	-
Exit 64 Loop	D	33.2	C	23.9	E	37.2	E	38.0	-	-	-	-
Exit 64	C	24.5	C	22.3	C	27.1	F	71.4	-	-	-	-
CD Road	-	-	-	-	-	-	-	-	C	22.5	C	20.2
Exit 65	D	32.6	C	23.5	E	37.4	C	23.7	E	37.9	C	23.8
I 20 Westbound												
Exit 68	C	21.4	E	41.7	D	31.3	F	125.0	D	30.9	D	34.6
Exit 65	E	36.5	F	58.7	F	73.0	F	58.4	A	8.7	A	7.9
Exit 64 Loop	B	19.5	C	26.1	C	26.6	C	23.2	-	-	-	-
Exit 64	B	15.5	F	51.5	F	49.6	F	56.3	-	-	-	-
CD Road	-	-	-	-	-	-	-	-	B	11.6	C	21.3
Exit 63	B	12.3	C	20.3	B	14.2	C	21.0	B	12.0	D	30.5
Exit 61	B	12.4	D	29.0	B	11.6	B	17.2	B	14.1	C	22.7

[1] Per Highway Capacity Manual 2010 criteria.

[2] Density expressed as PCE/per mile/per lane.

[W] Weaving Section

Merge

Merge Area	Existing Conditions				2040 No Build Conditions				2040 Build RRPA Conditions (unconstrained)			
	AM Peak Hour		PM Peak Hour		AM Peak Hour		PM Peak Hour		AM Peak Hour		PM Peak Hour	
	LOS[1]	Density[2]	LOS[1]	Density[2]	LOS[1]	Density[2]	LOS[1]	Density[2]	LOS[1]	Density[2]	LOS[1]	Density[2]
I 126 Eastbound												
From I-20	-	-	-	-	-	-	-	-	**E**	38.1	**C**	21.6
Colonial Life Blvd	**C**	24.9	**B**	13.7	**C**	25.1	**B**	15.0	**D**	32.6	**B**	16.9
Greystone Blvd	**B**	18.8	**A**	9.8	**B**	18.6	**B**	10.4	**E**	42.5	**B**	14.3
I 126 Westbound												
Greystone Blvd	**B**	12.8	**C**	25.4	**A**	8.4	**F**	75.4	**B**	12.4	**D**	28.1
Colonial Life Blvd	-	-	-	-	-	-	-	-	**A**	6.2	**B**	15.6

[1] Per Highway Capacity Manual 2010 criteria.

[2] Density expressed as PCE/per mile/per lane.

Diverge

Diverge Area	Existing Conditions				2040 No Build Conditions				2040 Build RRPA Conditions (unconstrained)			
	AM Peak Hour		PM Peak Hour		AM Peak Hour		PM Peak Hour		AM Peak Hour		PM Peak Hour	
	LOS[1]	Density[2]	LOS[1]	Density[2]	LOS[1]	Density[2]	LOS[1]	Density[2]	LOS[1]	Density[2]	LOS[1]	Density[2]
I-26 Eastbound												
Exit 101	E	41.2	C	26.4	F	101.1	B	15.7	D	28.4	B	16.6
Exit 101 Loop	C	22.6	B	16.2	F	116.2	C	20.1	C	23.7	B	12.8
Exit 102W	C	25.8	B	18.5	F	133.5	C	24.0	E	37.0	B	19.2
Exit 102 Loop	C	24.6	B	18.1	F	115.5	C	23.1	D	29.7	B	17.0
Exit 103	F	48.8	C	24.7	F	122.0	D	31.4	D	33.8	C	23.2
Exit 104	F	63.6	D	28.2	F	110.6	E	44.6	E	35.8	C	23.2
Exit 106	F	56.3	D	29.1	F	73.4	F	50.6	C	23.6	B	17.1
CD Road	-	-	-	-	-	-	-	-	F	72.2	C	26.3
Exit 107W	F	85.7	D	31.3	F	108.7	F	72.3	-	-	-	-
Exit 107 LoopW	F	51.3	D	34.7	F	61.5	F	78.6	-	-	-	-
Exit 108W	F	74.3	E	36.9	F	94.6	F	103.9	-	-	-	-
I-26 to I-26	F	52.0	E	40.6	F	58.5	F	103.7	E	36.7	C	20.4
Exit 110	D	32.6	F	106.1	F	54.6	F	140.0	C	21.2	C	24.4
I-26 Westbound												
Exit 110	C	22.6	C	24.3	F	49.4	F	103.0	F	46.9	D	32.6
Exit 108 (Existing) / To I-20 (RPA)	C	24.3	F	100.8	D	31.9	F	128.8	B	17.1	C	20.3
Exit 107W	C	24.3	F	100.8	D	31.9	F	128.8	-	-	-	-
Exit 107 LoopW	C	25.9	F	96.4	D	34.8	F	111.7	-	-	-	-
Exit 106W	C	27.2	F	104.6	E	35.6	F	113.3	B	14.8	C	23.5
Exit 106 Loop	D	28.4	F	83.7	E	37.1	F	92.5				
Exit 104	D	28.4	E	43.6	E	42.1	F	47.8	C	24.7	E	44.8
Exit 103	B	18.1	D	32.5	C	24.1	E	36.3	C	20.9	E	35.3
Exit 102	C	22.0	E	36.1	D	28.3	E	37.5	C	23.6	E	43.9
Exit 102 Loop	B	16.1	D	30.4	C	21.9	D	28.1	C	20.1	D	33.0
Exit 101W	B	15.3	F	55.0	C	20.1	C	25.4	B	17.6	D	29.5
Exit 101 Loop	B	13.1	F	74.7	B	17.7	C	21.5	B	15.5	C	25.3

[1] Per Highway Capacity Manual 2010 criteria.

[2] Density expressed as PCE/per mile/per lane.

Diverge

Diverge Area	Existing Conditions				2040 No Build Conditions				2040 Build RRPA Conditions (unconstrained)			
	AM Peak Hour		PM Peak Hour		AM Peak Hour		PM Peak Hour		AM Peak Hour		PM Peak Hour	
	LOS[1]	Density[2]	LOS[1]	Density[2]	LOS[1]	Density[2]	LOS[1]	Density[2]	LOS[1]	Density[2]	LOS[1]	Density[2]
I-20 Eastbound												
Exit 61	E	36.7	B	19.4	F	72.0	B	18.6	E	40.1	B	19.2
Exit 63 (Existing) / CD Road (RPA)	F	52.5	C	22.9	F	71.6	D	29.7	D	31.6	B	16.6
Exit 64	B	19.0	B	13.5	C	20.7	D	29.3	-	-	-	-
Exit 64 Loop	D	33.2	C	23.9	E	37.2	E	38.0	-	-	-	-
Exit 65	C	25.3	C	22.5	C	28.0	F	68.8	-	-	-	-
Exit 68	E	35.1	C	24.8	E	39.8	C	26.5	F	64.1	C	27.4
I-20 Westbound												
Exit 68	D	30.2	D	34.2	E	40.3	F	117.7	C	26.9	F	54.4
Exit 65	B	19.8	F	53.6	C	26.1	F	121.4	D	32.4	E	37.5
CD Road	-	-	-	-	-	-	-	-	B	14.7	B	19.5
Exit 64	E	36.9	F	59.3	F	73.7	F	58.9	-	-	-	-
Exit 64 Loop	B	19.5	C	26.1	C	26.6	C	23.2	-	-	-	-
Exit 63	B	15.5	F	51.5	F	49.6	F	56.3	A	8.7	A	7.9
Exit 61	B	19.7	E	43.4	D	29.4	F	91.0	D	28.3	F	107.2

[1] Per Highway Capacity Manual 2010 criteria.

[2] Density expressed as PCE/per mile/per lane.

Diverge

Diverge Area	Existing Conditions				2040 No Build Conditions				2040 Build RRPA Conditions (unconstrained)			
	AM Peak Hour		PM Peak Hour		AM Peak Hour		PM Peak Hour		AM Peak Hour		PM Peak Hour	
	LOS[1]	Density[2]	LOS[1]	Density[2]	LOS[1]	Density[2]	LOS[1]	Density[2]	LOS[1]	Density[2]	LOS[1]	Density[2]
I-126 Eastbound												
Colonial Life Blvd	-	-	-	-	-	-	-	-	D	29.4	B	11.1
Greystone Blvd	B	15.6	B	11.3	B	15.9	B	17.0	D	33.3	B	17.6
I-126 Westbound												
Greystone Blvd	B	15.3	C	27.0	B	16.1	F	90.1	B	15.5	D	31.5
Colonial Life Blvd	B	12.2	D	29.6	A	8.7	F	76.1	B	10.0	C	23.2
To I-26 WB	B	12.1	F	63.6	B	13.0	F	108.4	B	10.1	C	23.2
To I-20	-	-	-	-	-	-	-	-	A	6.3	B	15.8

[1] Per Highway Capacity Manual 2010 criteria.

[2] Density expressed as PCE/per mile/per lane.

TransModeler 2040 Build RRPA (unconstrained) Freeway Speed Tables

Mainline

Freeway Segment	2040 Build RRPA Conditions (unconstrained) AM Peak Hour LOS[1]	AM Peak Hour Speed (mph)	PM Peak Hour LOS[1]	PM Peak Hour Speed (mph)
I-26 Eastbound				
Exit 104 to Exit 106	D	49	C	61
CD Road	-	34	-	48
Exit 107 to Exit 108[W]	E	38	C	47
Exit 106 to Exit 107[W]				
I-126 Diverge to I-126 Merge				
Exit 108 to Exit 110	C	61	C	60
east of Exit 110	C	62	C	60
I-26 Westbound				
east of Exit 110	D	56	D	62
Exit 110 to Exit 108	B	63	C	61
I-126 Diverge to I-126 Merge	B	66	B	65
Exit 108 to Exit 107[W]	C	52	D	50
Exit 107 to Exit 106[W]				
I-26 Merge to Exit 106				
CD Road	-	48	-	42
Exit 106 to Exit 104	D	49	F	37

[1] Per Highway Capacity Manual 2010 crite

[2] Density expressed as PCE/per mile/per l

[W] Weaving Section

Mainline

Freeway Segment	2040 Build RRPA Conditions (unconstrained) AM Peak Hour LOS[1]	AM Peak Hour Speed (mph)	PM Peak Hour LOS[1]	PM Peak Hour Speed (mph)
I-20 Eastbound				
Exit 61 to Exit 63	D	57	B	64
CD Road (east of Exit 63 on ramp)	-	46	-	51
Exit 63 to Exit 64	C	65	B	67
Exit 64 to Exit 65				
CD Road (west of Exit 65 on ramp)	-	43	-	43
Exit 65 to Exit 68	E	50	D	61
I-20 Westbound				
Exit 68 to Exit 65	D	61	D	60
CD Road (west of Exit 65 on ramp)	-	50	-	49
Exit 65 to Exit 64	A	63	A	62
Exit 64 to Exit 63[W]				
CD Road (east of Exit 63 on ramp)	-	50	-	47
Exit 63 to Exit 61	B	66	E	44

[1] Per Highway Capacity Manual 2010 crite

[2] Density expressed as PCE/per mile/per l

Mainline

Freeway Segment	2040 Build RRPA Conditions (unconstrained) AM Peak Hour LOS[1]	AM Peak Hour Speed (mph)	PM Peak Hour LOS[1]	PM Peak Hour Speed (mph)
I-126 Eastbound				
I-26 to Colonial Life Blvd	D	52	B	56
Colonial Life Blvd to Greystone Blvd	E	53	B	61
I-126 Westbound				
Greystone Blvd to Colonial Life Blvd	B	65	D	60
Colonial Life Blvd to I-26	B	66	D	52

[1] Per Highway Capacity Manual 2010 crite

[2] Density expressed as PCE/per mile/per l

Merge

Merge Area	2040 Build RRPA Conditions (unconstrained) AM Peak Hour		PM Peak Hour	
	LOS[1]	Speed (mph)	LOS[1]	Speed (mph)
I-26 Eastbound				
Exit 104	D	58	B	62
Exit 106 Loop	E	38	C	47
Exit 106W				
Exit 107 LoopW	B	63	B	63
Exit 107W				
Exit 108	-	-	-	-
Exit 108 (I-126)	C	59	C	57
Exit 110	C	62	C	61
I-26 Westbound				
Exit 110	B	63	C	62
Exit 108 (I-126)	B	62	C	54
Exit 108W	-	-	-	-
Exit 107 LoopW	C	49	E	43
Exit 107W				
Exit 106	C	50	E	45

[1] Per Highway Capacity Manual 2010 cri

[2] Density expressed as PCE/per mile/pe

[W] Weaving Section

Merge

Merge Area	2040 Build RRPA Conditions (unconstrained) AM Peak Hour		PM Peak Hour	
	LOS[1]	Speed (mph)	LOS[1]	Speed (mph)
I-20 Eastbound				
Exit 61	D	56	B	64
Exit 63 Loop	-	-	-	-
Exit 63	-	-	-	-
Exit 64 Loop	-	-	-	-
Exit 64	-	-	-	-
CD Road	C	57	C	58
Exit 65	E	44	C	50
I-20 Westbound				
Exit 68	D	60	D	60
Exit 65	A	63	A	62
Exit 64 Loop	-	-	-	-
Exit 64	-	-	-	-
CD Road	B	63	C	57
Exit 63	B	64	D	55

[1] Per Highway Capacity Manual 2010 cri

[2] Density expressed as PCE/per mile/pe

[W] Weaving Section

Merge

Merge Area	2040 Build RRPA Conditions (unconstrained) AM Peak Hour		PM Peak Hour	
	LOS[1]	Speed (mph)	LOS[1]	Speed (mph)
I-126 Eastbound				
From I-20	E	45	C	49
Colonial Life Blvd	D	49	B	62
I-126 Westbound				
Greystone Blvd	B	63	D	56
Colonial Life Blvd	A	65	B	58

[1] Per Highway Capacity Manual 2010 cri

[2] Density expressed as PCE/per mile/pe

Diverge

Diverge Area	2040 Build RRPA Conditions (unconstrained) AM Peak Hour LOS[1]	AM Peak Hour Speed (mph)	PM Peak Hour LOS[1]	PM Peak Hour Speed (mph)
I-26 Eastbound				
Exit 106	C	31	B	59
CD Road	F	**23**	C	51
Exit 107W	-	-	-	-
Exit 107 LoopW	-	-	-	-
Exit 108W	-	-	-	-
I-26 to I-26	E	38	C	47
Exit 110	C	64	C	63
I-26 Westbound				
Exit 110	F	36	D	58
Exit 108 (Existing) / To I-20 (RPA)	B	58	C	56
Exit 107W	-	-	-	-
Exit 107 LoopW	-	-	-	-
Exit 106W	B	60	C	58
Exit 106 Loop				
Exit 104	C	52	E	42

[1] Per Highway Capacity Manual 2010 cri

[2] Density expressed as PCE/per mile/pe

Diverge

Diverge Area	2040 Build RRPA Conditions (unconstrained) AM Peak Hour LOS[1]	AM Peak Hour Speed (mph)	PM Peak Hour LOS[1]	PM Peak Hour Speed (mph)
I-20 Eastbound				
Exit 63 (Existing) / CD Road (RPA)	D	61	B	62
Exit 64	-	-	-	-
Exit 64 Loop	-	-	-	-
Exit 65	-	-	-	-
Exit 68	F	32	C	56
I-20 Westbound				
Exit 65	D	57	E	49
CD Road	B	60	B	57
Exit 64	-	-	-	-
Exit 64 Loop	-	-	-	-
Exit 63	A	62	A	64
Exit 61	D	36	F	18

[1] Per Highway Capacity Manual 2010 cri

[2] Density expressed as PCE/per mile/pe

Diverge

Diverge Area	2040 Build RRPA Conditions (unconstrained) AM Peak Hour LOS[1]	AM Peak Hour Speed (mph)	PM Peak Hour LOS[1]	PM Peak Hour Speed (mph)
I-126 Eastbound				
Colonial Life Blvd	D	52	B	56
Greystone Blvd	D	43	B	46
I-126 Westbound				
Greystone Blvd	B	64	D	59
Colonial Life Blvd	B	61	C	57
To I-26 WB	B	63	C	59
To I-20	A	65	B	50

[1] Per Highway Capacity Manual 2010 cri

[2] Density expressed as PCE/per mile/pe

TransModeler 2040 Build RRPA (constrained) Freeway Speed Tables

Refined Recommended Preferred Alternative (constrained)
Segment Speeds

Mainline

Freeway Segment	2040 Build RRPA Conditions (constrained) AM Peak Hour LOS[1]	AM Peak Hour Speed (mph)	PM Peak Hour LOS[1]	PM Peak Hour Speed (mph)
I-26 Eastbound				
Exit 104 to Exit 106	D	49	C	61
CD Road	-	34	-	48
Exit 107 to Exit 108[W]	E	38	C	47
Exit 106 to Exit 107[W]				
I-126 Diverge to I-126 Merge				
Exit 108 to Exit 110	C	61	C	60
east of Exit 110	C	63	C	60
I-26 Westbound				
east of Exit 110	D	52	D	62
Exit 110 to Exit 108	B	63	C	61
I-126 Diverge to I-126 Merge	B	65	B	65
Exit 108 to Exit 107[W]	C	52	D	50
Exit 107 to Exit 106[W]				
I-26 Merge to Exit 106				
CD Road	-	48	-	44
Exit 106 to Exit 104	D	48	F	42

[1] Per Highway Capacity Manual 2010 crit

[2] Density expressed as PCE/per mile/per

[W] Weaving Section

Mainline

Freeway Segment	2040 Build RRPA Conditions (constrained) AM Peak Hour LOS[1]	AM Peak Hour Speed (mph)	PM Peak Hour LOS[1]	PM Peak Hour Speed (mph)
I-20 Eastbound				
Exit 61 to Exit 63	D	59	B	65
CD Road (east of Exit 63 on ramp)	-	46	-	51
Exit 63 to Exit 64	C	64	A	67
Exit 64 to Exit 65				
CD Road (west of Exit 65 off ramp)	-	16	-	44
Exit 65 to Exit 68	F	53	E	57
I-20 Westbound				
Exit 68 to Exit 65	D	54	E	43
CD Road (west of Exit 65 on ramp)	-	50	-	50
Exit 65 to Exit 64	A	64	A	62
Exit 64 to Exit 63[W]				
CD Road (east of Exit 63 off ramp)	-	50	-	46
Exit 63 to Exit 61	B	64	F	14

[1] Per Highway Capacity Manual 2010 crit

[2] Density expressed as PCE/per mile/per

Mainline

Freeway Segment	2040 Build RRPA Conditions (constrained) AM Peak Hour LOS[1]	AM Peak Hour Speed (mph)	PM Peak Hour LOS[1]	PM Peak Hour Speed (mph)
I-126 Eastbound				
I-26 to Colonial Life Blvd	D	52	A	56
Colonial Life Blvd to Greystone Blvd	E	54	B	61
I-126 Westbound				
Greystone Blvd to Colonial Life Blvd	B	65	D	60
Colonial Life Blvd to I-26	B	66	D	52

[1] Per Highway Capacity Manual 2010 crit

[2] Density expressed as PCE/per mile/per

Refined Recommended Preferred Alternative (constrained)
Segment Speeds

Merge

Merge Area	2040 Build RRPA Conditions (constrained) AM Peak Hour LOS[1]	AM Peak Hour Speed (mph)	PM Peak Hour LOS[1]	PM Peak Hour Speed (mph)
I-26 Eastbound				
Exit 104	C	58	C	62
Exit 106 Loop	E	38	C	47
Exit 106W				
Exit 107 LoopW	B	63	B	63
Exit 107W				
Exit 108	-	-	-	-
Exit 108 (I-126)	C	60	C	57
Exit 110	C	63	C	61
I-26 Westbound				
Exit 110	B	63	C	62
Exit 108 (I-126)	B	62	C	54
Exit 108W	-	-	-	-
Exit 107 LoopW	C	49	E	45
Exit 107W				
Exit 106	C	49	E	45

[1] Per Highway Capacity Manual 2010 cri
[2] Density expressed as PCE/per mile/pe
[W] Weaving Section

Merge

Merge Area	2040 Build RRPA Conditions (constrained) AM Peak Hour LOS[1]	AM Peak Hour Speed (mph)	PM Peak Hour LOS[1]	PM Peak Hour Speed (mph)
I-20 Eastbound				
Exit 61	D	57	B	64
Exit 63 Loop	-	-	-	-
Exit 63	-	-	-	-
CD Road (east of Exit 63 on ramp)	-	-	-	-
Exit 64	-	-	-	-
CD Road	F	14	B	58
Exit 65	F	13	D	48
I-20 Westbound				
Exit 68	F	52	E	33
Exit 65	F	64	A	62
Exit 64 Loop	-	-	-	-
Exit 64	-	-	-	-
CD Road	B	63	F	51
Exit 63	B	64	F	20

[1] Per Highway Capacity Manual 2010 cri
[2] Density expressed as PCE/per mile/pe
[W] Weaving Section

Merge

Merge Area	2040 Build RRPA Conditions (constrained) AM Peak Hour LOS[1]	AM Peak Hour Speed (mph)	PM Peak Hour LOS[1]	PM Peak Hour Speed (mph)
I-126 Eastbound				
From I-20	E	45	C	49
Colonial Life Blvd	D	50	B	62
I-126 Westbound				
Greystone Blvd	B	63	D	56
Colonial Life Blvd	A	65	B	57

[1] Per Highway Capacity Manual 2010 cri
[2] Density expressed as PCE/per mile/pe

Refined Recommended Preferred Alternative (constrained)
Segment Speeds

Diverge

Diverge Area	2040 Build RRPA Conditions (constrained) AM Peak Hour LOS[1]	AM Peak Hour Speed (mph)	PM Peak Hour LOS[1]	PM Peak Hour Speed (mph)
I-26 Eastbound				
Exit 106	C	30	B	59
CD Road	F	23	C	51
Exit 107W	-	-	-	-
Exit 107 LoopW	-	-	-	-
Exit 108W	-	-	-	-
I-26 to I-26	E	38	C	47
Exit 110	C	64	C	63
I-26 Westbound				
Exit 110	F	32	D	58
Exit 108 (Existing) / To I-20 (RPA)	B	58	C	56
Exit 107W	-	-	-	-
Exit 107 LoopW	-	-	-	-
Exit 106W	B	60	C	58
Exit 106 Loop				
Exit 104	C	51	F	45

[1] Per Highway Capacity Manual 2010 cri

[2] Density expressed as PCE/per mile/per lane.

Diverge

Diverge Area	2040 Build RRPA Conditions (constrained) AM Peak Hour LOS[1]	AM Peak Hour Speed (mph)	PM Peak Hour LOS[1]	PM Peak Hour Speed (mph)
I-20 Eastbound				
Exit 63 (Existing) / CD Road (RPA)	D	61	B	63
Exit 64	-	-	-	-
Exit 64 Loop	-	-	-	-
Exit 65	-	-	-	-
Exit 68	F	51	E	54
I-20 Westbound				
Exit 65	D	57	F	57
CD Road	B	60	B	59
Exit 64	-	-	-	-
Exit 64 Loop	-	-	-	-
Exit 63	A	62	A	64
Exit 61	E	45	F	23

[1] Per Highway Capacity Manual 2010 cri

[2] Density expressed as PCE/per mile/per

Diverge

Diverge Area	2040 Build RRPA Conditions (constrained) AM Peak Hour LOS[1]	AM Peak Hour Speed (mph)	PM Peak Hour LOS[1]	PM Peak Hour Speed (mph)
I-126 Eastbound				
Colonial Life Blvd	D	52	B	56
Greystone Blvd	D	43	B	45
I-126 Westbound				
Greystone Blvd	B	64	D	59
Colonial Life Blvd	B	61	C	57
To I-26 WB	B	63	C	59
To I-20	A	64	B	51

[1] Per Highway Capacity Manual 2010 cri

[2] Density expressed as PCE/per mile/per

Appendix E—TransModeler Intersection Analysis Outputs

2015 Existing AM

Node	Superlink	Run	Average Control Delay	Approach Street Name	Direction	Intersection
4	5081	1	4.053475	BROAD RIVER RD	W	WESTERN LN & BROAD RIVER RD
4	5081	2	3.691578			
4	5081	3	4.5			
4	5081	4	4.3			
4	5081	5	3.6			
4	5081	6	3.770289			
4	5081	7	3.662427			
4	5081	8	3.3			
4	5081	9	3.0			
4	5081	10	3.6			
4	6465	1	6.791705	WESTERN LN	S	WESTERN LN & BROAD RIVER RD
4	6465	2	6.255169			
4	6465	3	6.4			
4	6465	4	6.7			
4	6465	5	5.824553			
4	6465	6	7.05323			
4	6465	7	6.5			
4	6465	8	6.4			
4	6465	9	7.0			
4	6465	10	5.96254			
4	6466	1	4.45747	BROAD RIVER RD	E	WESTERN LN & BROAD RIVER RD
4	6466	2	4.6			
4	6466	3	4.2			
4	6466	4	4.005102			
4	6466	5	4.735423			
4	6466	6	4.2			
4	6466	7	4.5			
4	6466	8	4.137388			
4	6466	9	4.349327			
4	6466	10	4.7			
4	6467	1	6.7	WESTERN LN	N	WESTERN LN & BROAD RIVER RD
4	6467	2	6.5			
4	6467	3	7.17641			
4	6467	4	7.668935			
4	6467	5	6.3			
4	6467	6	7.1			
4	6467	7	6.8			
4	6467	8	7.318074			
4	6467	9	6.163217			
4	6467	10	6.6			
11	5487	1	0.0	MORNINGHILL DR	N	MORNINGHILL DR & BURNETTE DR
11	5487	2	0			
11	5487	3	0			
11	5487	4	0.0			
11	5487	5	0.0			
11	5487	6	0.0			
11	5487	7	0			
11	5487	8	0			
11	5487	9	0.0			
11	5487	10	0.0			
11	6536	1		MORNINGHILL DR	S	MORNINGHILL DR & BURNETTE DR
11	6536	2				
11	6536	3				
11	6536	4				
11	6536	5				
11	6536	6				
11	6536	7				
11	6536	8				
11	6536	9				
11	6536	10				
11	6537	1	0	BURNETTE DR	E	MORNINGHILL DR & BURNETTE DR
11	6537	2	0.0			
11	6537	3	0.0			
11	6537	4	0.0			
11	6537	5	0.0			
11	6537	6	0			
11	6537	7	0			
11	6537	8	0.0			
11	6537	9	0.0			
11	6537	10	0.0			
26	5488	1	0	RAMP	S	RAMP & 6502 (NW)
26	5488	2	0			
26	5488	3	0.0			
26	5488	4	0.0			
26	5488	5	0.0			
26	5488	6	0			
26	5488	7	0			
26	5488	8	0.0			
26	5488	9	0.0			
26	5488	10	0.0			
26	6501	1	10.078743	RAMP	N	RAMP & 6502 (NW)
26	6501	2	8.151267			
26	6501	3	9.8			
26	6501	4	8.5			
26	6501	5	9.7			
26	6501	6	8.057293			
26	6501	7	8.65725			
26	6501	8	9.0			
26	6501	9	8.7			
26	6501	10	8.2			
26	6502	1	0		SE	RAMP & 6502 (NW)
26	6502	2	0			
26	6502	3	0.0			
26	6502	4	0.0			
26	6502	5	0.0			
26	6502	6	0			

Node	Superlink	Run	Average Control Delay	Approach Street Name	Direction	Intersection
26	6502	7	0			
26	6502	8	0.0			
26	6502	9	0.0			
26	6502	10	0.0			
28	5140	1	0	GREYSTONE BLVD	S	GREYSTONE BLVD & CANDI LN
28	5140	2	0			
28	5140	3	0.0			
28	5140	4	0			
28	5140	5	0			
28	5140	6	0.0			
28	5140	7	0.0			
28	5140	8	0			
28	5140	9	0			
28	5140	10	0.0			
28	6506	1	7.0	GREYSTONE BLVD	W	GREYSTONE BLVD & CANDI LN
28	6506	2	6.665477			
28	6506	3	6.458674			
28	6506	4	6.5			
28	6506	5	6.4			
28	6506	6	6.8			
28	6506	7	6.685291			
28	6506	8	6.505632			
28	6506	9	6.7			
28	6506	10	6.8			
28	6507	1		CANDI LN	E	GREYSTONE BLVD & CANDI LN
28	6507	2				
28	6507	3				
28	6507	4				
28	6507	5				
28	6507	6				
28	6507	7				
28	6507	8				
28	6507	9				
28	6507	10				
41	6518	1	1.916767	BROAD RIVER RD	NW	DUTCH SQUARE BLVD & BROAD RIVER RD
41	6518	2	1.484282			
41	6518	3	2.0			
41	6518	4	1.3			
41	6518	5	1.4			
41	6518	6	1.332684			
41	6518	7	1.29434			
41	6518	8	1.3			
41	6518	9	2.1			
41	6518	10	2.2			
41	6519	1	44.814382	DUTCH SQUARE BLVD	E	DUTCH SQUARE BLVD & BROAD RIVER RD
41	6519	2	42.421504			
41	6519	3	39.0			
41	6519	4	46.7			
41	6519	5	42.2			
41	6519	6	44.718741			
41	6519	7	41.075583			
41	6519	8	40.6			
41	6519	9	41.4			
41	6519	10	42.369209			
41	6521	1	0.62158	BROAD RIVER RD	SE	DUTCH SQUARE BLVD & BROAD RIVER RD
41	6521	2	0.6			
41	6521	3	0.7			
41	6521	4	0.7			
41	6521	5	0.964764			
41	6521	6	0.846938			
41	6521	7	0.8			
41	6521	8	1.0			
41	6521	9	0.752756			
41	6521	10	1.064855			
43	6519	1		DUTCH SQUARE BLVD	W	DUTCH SQUARE BLVD & 6522 (N)
43	6519	2				
43	6519	3				
43	6519	4				
43	6519	5				
43	6519	6				
43	6519	7				
43	6519	8				
43	6519	9				
43	6519	10				
43	6520	1	17.069966	DUTCH SQUARE BLVD	E	DUTCH SQUARE BLVD & 6522 (N)
43	6520	2	17.0			
43	6520	3	16.5			
43	6520	4	14.2			
43	6520	5	12.282679			
43	6520	6	15.060517			
43	6520	7	19.8			
43	6520	8	18.1			
43	6520	9	20.188677			
43	6520	10	19.881294			
43	6522	1	0.0		SW	DUTCH SQUARE BLVD & 6522 (N)
43	6522	2	0.0			
43	6522	3	0			
43	6522	4	0			
43	6522	5	0.0			
43	6522	6	0.0			
43	6522	7	0.0			
43	6522	8	0			
43	6522	9	0			
43	6522	10	0			
46	6273	1	0.0	PARKRIDGE DR	NE	PARKRIDGE DR & 6555 (NE)
46	6273	2	0.0			
46	6273	3	0			
46	6273	4	0			
46	6273	5	0.0			
46	6273	6	0.0			
46	6273	7	0.0			
46	6273	8	0			
46	6273	9	0			
46	6273	10	0.0			
46	6555	1			SW	PARKRIDGE DR & 6555 (NE)
46	6555	2				
46	6555	3				
46	6555	4				
46	6555	5				
46	6555	6				
46	6555	7				
46	6555	8				

Node	Superlink	Run	Average Control Delay	Approach Street Name	Direction	Intersection
46	6555	9				
46	6555	10				
46	6556	1	26.834216	PARKRIDGE DR	SE	PARKRIDGE DR & 6555 (NE)
46	6556	2	25.269403			
46	6556	3	24.555727			
46	6556	4	25.3252			
46	6556	5	29.461545			
46	6556	6	28.261439			
46	6556	7	26.963476			
46	6556	8	20.524273			
46	6556	9	23.902378			
46	6556	10	22.69317			
100000012	5081	1	30.052793	BROAD RIVER RD	SE	KINLEY RD, BROAD RIVER RD & KENNERLY RD
100000012	5081	2	32.036483			
100000012	5081	3	28.79136			
100000012	5081	4	28.456142			
100000012	5081	5	32.898263			
100000012	5081	6	31.036821			
100000012	5081	7	29.027517			
100000012	5081	8	25.485975			
100000012	5081	9	25.814645			
100000012	5081	10	28.518273			
100000012	6276	1	36.951203	KINLEY RD	N	KINLEY RD, BROAD RIVER RD & KENNERLY RD
100000012	6276	2	45.558761			
100000012	6276	3	55.545282			
100000012	6276	4	39.866875			
100000012	6276	5	41.821727			
100000012	6276	6	44.692414			
100000012	6276	7	48.728065			
100000012	6276	8	35.42195			
100000012	6276	9	39.46841			
100000012	6276	10	41.835876			
100000012	6307	1	190.567557	KENNERLY RD	S	KINLEY RD, BROAD RIVER RD & KENNERLY RD
100000012	6307	2	204.947154			
100000012	6307	3	200.669135			
100000012	6307	4	226.827703			
100000012	6307	5	210.947665			
100000012	6307	6	165.197102			
100000012	6307	7	186.394143			
100000012	6307	8	211.202795			
100000012	6307	9	198.346193			
100000012	6307	10	188.497613			
100000012	6308	1	21.102292	BROAD RIVER RD	NW	KINLEY RD, BROAD RIVER RD & KENNERLY RD
100000012	6308	2	24.116709			
100000012	6308	3	23.971598			
100000012	6308	4	22.397916			
100000012	6308	5	22.803142			
100000012	6308	6	24.290182			
100000012	6308	7	23.808231			
100000012	6308	8	20.806895			
100000012	6308	9	22.6048			
100000012	6308	10	23.13655			
100000025	6267	1	0	PARKRIDGE DR	NW	CLUB RD & PARKRIDGE DR
100000025	6267	2	0			
100000025	6267	3	0			
100000025	6267	4	0			
100000025	6267	5	0			
100000025	6267	6	0			
100000025	6267	7	0			
100000025	6267	8	0			
100000025	6267	9	0			
100000025	6267	10	0			
100000025	6273	1	0	PARKRIDGE DR	SE	CLUB RD & PARKRIDGE DR
100000025	6273	2	0			
100000025	6273	3	0			
100000025	6273	4	0			
100000025	6273	5	0			
100000025	6273	6	0			
100000025	6273	7	0			
100000025	6273	8	0			
100000025	6273	9	0			
100000025	6273	10	0			
100000025	6304	1		CLUB RD	S	CLUB RD & PARKRIDGE DR
100000025	6304	2				
100000025	6304	3				
100000025	6304	4				
100000025	6304	5				
100000025	6304	6				
100000025	6304	7				
100000025	6304	8				
100000025	6304	9				
100000025	6304	10				
100000037	5101	1	17.553771	HARBISON BLVD	NE	BROAD RIVER RD & HARBISON BLVD
100000037	5101	2	15.905319			
100000037	5101	3	17.915507			
100000037	5101	4	16.283069			
100000037	5101	5	18.93931			
100000037	5101	6	18.994126			
100000037	5101	7	19.347293			
100000037	5101	8	16.741527			
100000037	5101	9	17.554325			
100000037	5101	10	19.008742			
100000037	6317	1	9.754298	BROAD RIVER RD	SE	BROAD RIVER RD & HARBISON BLVD
100000037	6317	2	9.989346			
100000037	6317	3	11.191422			
100000037	6317	4	13.084619			
100000037	6317	5	11.105328			
100000037	6317	6	11.194395			
100000037	6317	7	11.507067			
100000037	6317	8	11.799339			
100000037	6317	9	11.601799			
100000037	6317	10	11.41888			
100000037	6320	1	5.236666	BROAD RIVER RD	NW	BROAD RIVER RD & HARBISON BLVD
100000037	6320	2	4.390264			
100000037	6320	3	4.503016			
100000037	6320	4	3.009614			
100000037	6320	5	5.309062			
100000037	6320	6	4.664188			
100000037	6320	7	3.345425			
100000037	6320	8	5.201537			
100000037	6320	9	4.86552			
100000037	6320	10	4.360873			

Node	Superlink	Run	Average Control Delay	Approach Street Name	Direction	Intersection
100000038	6232	1	0	BROAD RIVER RD	NW	BROAD RIVER RD & 6311 (S)
100000038	6232	2	0			
100000038	6232	3	0			
100000038	6232	4	0			
100000038	6232	5	0			
100000038	6232	6	0			
100000038	6232	7	0			
100000038	6232	8	0			
100000038	6232	9	0			
100000038	6232	10	0			
100000038	6311	1	9.6364		N	BROAD RIVER RD & 6311 (S)
100000038	6311	2	8.154519			
100000038	6311	3				
100000038	6311	4	28.178238			
100000038	6311	5				
100000038	6311	6				
100000038	6311	7	5.657135			
100000038	6311	8				
100000038	6311	9	7.871399			
100000038	6311	10				
100000038	6312	1	0	BROAD RIVER RD	SE	BROAD RIVER RD & 6311 (S)
100000038	6312	2	0.011094			
100000038	6312	3	0			
100000038	6312	4	0			
100000038	6312	5	0			
100000038	6312	6	0			
100000038	6312	7	0.027541			
100000038	6312	8	0			
100000038	6312	9	0			
100000038	6312	10	0			
100000041	6281	1	0	LAKE MURRAY BLVD	W	LAKE MURRAY BLVD & 6311 (N)
100000041	6281	2	0			
100000041	6281	3	0			
100000041	6281	4	0			
100000041	6281	5	0			
100000041	6281	6	0			
100000041	6281	7	0			
100000041	6281	8	0			
100000041	6281	9	0			
100000041	6281	10	0			
100000041	6311	1			SW	LAKE MURRAY BLVD & 6311 (N)
100000041	6311	2				
100000041	6311	3				
100000041	6311	4				
100000041	6311	5				
100000041	6311	6				
100000041	6311	7				
100000041	6311	8				
100000041	6311	9				
100000041	6311	10				
100000041	6313	1	0.084892	LAKE MURRAY BLVD	E	LAKE MURRAY BLVD & 6311 (N)
100000041	6313	2	0.043843			
100000041	6313	3	0			
100000041	6313	4	0.025148			
100000041	6313	5	0			
100000041	6313	6	0			
100000041	6313	7	0.269182			
100000041	6313	8	0			
100000041	6313	9	0.403418			
100000041	6313	10	0			
100000046	5511	1	24.486187	BUSH RIVER RD	E	BUSH RIVER RD, BROAD RIVER RD & ELM ABODE TER
100000046	5511	2	24.801094			
100000046	5511	3	26.469303			
100000046	5511	4	27.267728			
100000046	5511	5	28.944789			
100000046	5511	6	27.113446			
100000046	5511	7	30.293289			
100000046	5511	8	27.013799			
100000046	5511	9	27.005246			
100000046	5511	10	26.913172			
100000046	6323	1	154.606766	BROAD RIVER RD	NW	BUSH RIVER RD, BROAD RIVER RD & ELM ABODE TER
100000046	6323	2	174.797798			
100000046	6323	3	121.070221			
100000046	6323	4	153.56638			
100000046	6323	5	169.991633			
100000046	6323	6	203.489625			
100000046	6323	7	146.491599			
100000046	6323	8	166.560816			
100000046	6323	9	134.334289			
100000046	6323	10	103.454308			
100000046	6324	1	71.787387	ELM ABODE TER	SW	BUSH RIVER RD, BROAD RIVER RD & ELM ABODE TER
100000046	6324	2	47.461018			
100000046	6324	3	56.800238			
100000046	6324	4	51.025552			
100000046	6324	5	89.590386			
100000046	6324	6	50.627874			
100000046	6324	7	85.381279			
100000046	6324	8	40.917128			
100000046	6324	9	47.083017			
100000046	6324	10	46.301909			
100000046	6518	1	22.088302	BROAD RIVER RD	SE	BUSH RIVER RD, BROAD RIVER RD & ELM ABODE TER
100000046	6518	2	22.677685			
100000046	6518	3	21.246872			
100000046	6518	4	24.295066			
100000046	6518	5	25.51602			
100000046	6518	6	24.026278			
100000046	6518	7	27.530483			
100000046	6518	8	21.735141			
100000046	6518	9	23.294457			
100000046	6518	10	23.105674			
100000049	6318	1	73.774931	LOST CREEK DR	S	LOST CREEK DR, BROAD RIVER RD & PINEY WOODS RD
100000049	6318	2	62.824281			
100000049	6318	3	76.049805			
100000049	6318	4	76.009402			
100000049	6318	5	63.86191			
100000049	6318	6	71.367944			
100000049	6318	7	67.711146			
100000049	6318	8	68.303344			
100000049	6318	9	77.798784			
100000049	6318	10	66.429866			
100000049	6319	1	20.5592	PINEY WOODS RD	N	LOST CREEK DR, BROAD RIVER RD & PINEY WOODS RD
100000049	6319	2	19.713045			

Node	Superlink	Run	Average Control Delay	Approach Street Name	Direction	Intersection
100000049	6319	3	18.12807			
100000049	6319	4	17.045097			
100000049	6319	5	18.342933			
100000049	6319	6	19.914077			
100000049	6319	7	17.607886			
100000049	6319	8	21.619286			
100000049	6319	9	19.065286			
100000049	6319	10	17.826069			
100000049	6320	1	12.0655	BROAD RIVER RD	SE	LOST CREEK DR, BROAD RIVER RD & PINEY WOODS RD
100000049	6320	2	12.028341			
100000049	6320	3	12.336024			
100000049	6320	4	13.053846			
100000049	6320	5	8.653137			
100000049	6320	6	10.652277			
100000049	6320	7	15.646124			
100000049	6320	8	11.501573			
100000049	6320	9	13.890235			
100000049	6320	10	12.010395			
100000049	6322	1	8.765103	BROAD RIVER RD	NW	LOST CREEK DR, BROAD RIVER RD & PINEY WOODS RD
100000049	6322	2	6.641061			
100000049	6322	3	7.200488			
100000049	6322	4	8.152131			
100000049	6322	5	7.439303			
100000049	6322	6	9.36003			
100000049	6322	7	7.44594			
100000049	6322	8	7.459336			
100000049	6322	9	7.593564			
100000049	6322	10	9.050521			
100000068	6321	1	9.980311	PINEY GROVE RD	E	BROAD RIVER RD & PINEY GROVE RD
100000068	6321	2	10.888484			
100000068	6321	3	9.314896			
100000068	6321	4	11.024547			
100000068	6321	5	9.793986			
100000068	6321	6	12.853679			
100000068	6321	7	9.924431			
100000068	6321	8	13.024579			
100000068	6321	9	9.988737			
100000068	6321	10	12.878387			
100000068	6322	1	2.904667	BROAD RIVER RD	SE	BROAD RIVER RD & PINEY GROVE RD
100000068	6322	2	2.863228			
100000068	6322	3	2.747439			
100000068	6322	4	2.968537			
100000068	6322	5	2.657897			
100000068	6322	6	2.835053			
100000068	6322	7	2.711095			
100000068	6322	8	2.336182			
100000068	6322	9	2.278681			
100000068	6322	10	2.705387			
100000068	6357	1	3.187238	BROAD RIVER RD	NW	BROAD RIVER RD & PINEY GROVE RD
100000068	6357	2	2.650426			
100000068	6357	3	3.767907			
100000068	6357	4	4.220662			
100000068	6357	5	3.099178			
100000068	6357	6	3.61339			
100000068	6357	7	4.038323			
100000068	6357	8	2.455816			
100000068	6357	9	3.760328			
100000068	6357	10	3.616453			
100000085	6325	1	0.039015	BROAD RIVER RD	E	BROAD RIVER RD, RIVERHILL CIR & RT
100000085	6325	2	0.083197			
100000085	6325	3	0.051368			
100000085	6325	4	0.058507			
100000085	6325	5	0.042537			
100000085	6325	6	0.035625			
100000085	6325	7	0.085777			
100000085	6325	8	0.068824			
100000085	6325	9	0.051483			
100000085	6325	10	0.061009			
100000085	6329	1	5.103786	RT	E	BROAD RIVER RD, RIVERHILL CIR & RT
100000085	6329	2	5.104957			
100000085	6329	3	4.67461			
100000085	6329	4	3.409965			
100000085	6329	5	5.146657			
100000085	6329	6	5.121843			
100000085	6329	7	4.826756			
100000085	6329	8	5.224156			
100000085	6329	9	4.115345			
100000085	6329	10	6.254469			
100000085	6330	1	1.808346	BROAD RIVER RD	W	BROAD RIVER RD, RIVERHILL CIR & RT
100000085	6330	2	2.367701			
100000085	6330	3	1.30313			
100000085	6330	4	1.264091			
100000085	6330	5	2.605834			
100000085	6330	6	1.84915			
100000085	6330	7	2.55966			
100000085	6330	8	2.127169			
100000085	6330	9	1.420798			
100000085	6330	10	2.551566			
100000085	6331	1	5.32564	RIVERHILL CIR	W	BROAD RIVER RD, RIVERHILL CIR & RT
100000085	6331	2	5.519401			
100000085	6331	3	3.952896			
100000085	6331	4	5.508616			
100000085	6331	5	4.649449			
100000085	6331	6	3.507532			
100000085	6331	7	5.525246			
100000085	6331	8	2.803116			
100000085	6331	9	3.37169			
100000085	6331	10	2.733385			
100000093	4299	1	33.848792	RAMP	SW	SUNSET BLVD & RAMP
100000093	4299	2	40.940227			
100000093	4299	3	33.75952			
100000093	4299	4	39.430191			
100000093	4299	5	38.610839			
100000093	4299	6	42.059087			
100000093	4299	7	39.823217			
100000093	4299	8	38.5931			
100000093	4299	9	41.13302			
100000093	4299	10	37.794795			
100000093	4949	1	13.687634	SUNSET BLVD	E	SUNSET BLVD & RAMP
100000093	4949	2	13.792468			
100000093	4949	3	10.468259			
100000093	4949	4	13.272343			

Node	Superlink	Run	Average Control Delay	Approach Street Name	Direction	Intersection
100000093	4949	5	14.169239			
100000093	4949	6	11.367672			
100000093	4949	7	11.113769			
100000093	4949	8	12.273302			
100000093	4949	9	13.546875			
100000093	4949	10	10.62564			
100000093	4950	1	0.090979	SUNSET BLVD	W	SUNSET BLVD & RAMP
100000093	4950	2	0.0964			
100000093	4950	3	0.041573			
100000093	4950	4	0.126827			
100000093	4950	5	0.050186			
100000093	4950	6	0.013136			
100000093	4950	7	0.019912			
100000093	4950	8	0.030063			
100000093	4950	9	0.036721			
100000093	4950	10	0.087157			
100000120	5031	1	11.580091	SUNSET BLVD	W	CORLEY MILL RD, SUNSET BLVD & GINNY LN
100000120	5031	2	11.251568			
100000120	5031	3	11.617075			
100000120	5031	4	11.365916			
100000120	5031	5	11.269333			
100000120	5031	6	11.748848			
100000120	5031	7	11.169557			
100000120	5031	8	11.290056			
100000120	5031	9	11.354672			
100000120	5031	10	10.966971			
100000120	5352	1	14.193418	CORLEY MILL RD	S	CORLEY MILL RD, SUNSET BLVD & GINNY LN
100000120	5352	2	14.201777			
100000120	5352	3	13.726885			
100000120	5352	4	14.731614			
100000120	5352	5	14.114036			
100000120	5352	6	13.513407			
100000120	5352	7	13.746702			
100000120	5352	8	13.833211			
100000120	5352	9	14.318289			
100000120	5352	10	13.494154			
100000120	5353	1	27.56779	GINNY LN	N	CORLEY MILL RD, SUNSET BLVD & GINNY LN
100000120	5353	2	29.046788			
100000120	5353	3	29.100833			
100000120	5353	4	27.920681			
100000120	5353	5	32.382511			
100000120	5353	6	32.240923			
100000120	5353	7	29.878876			
100000120	5353	8	27.736852			
100000120	5353	9	27.828659			
100000120	5353	10	34.062109			
100000120	5355	1	32.620623	SUNSET BLVD	E	CORLEY MILL RD, SUNSET BLVD & GINNY LN
100000120	5355	2	30.666224			
100000120	5355	3	32.05063			
100000120	5355	4	32.526639			
100000120	5355	5	35.945077			
100000120	5355	6	43.26107			
100000120	5355	7	35.797859			
100000120	5355	8	30.570943			
100000120	5355	9	27.691806			
100000120	5355	10	28.724946			
100000134	2048	1	25.854202	RAMP	SW	SUNSET BLVD & RAMP
100000134	2048	2	23.663142			
100000134	2048	3	24.539477			
100000134	2048	4	24.096057			
100000134	2048	5	24.648146			
100000134	2048	6	23.150256			
100000134	2048	7	26.017686			
100000134	2048	8	23.259061			
100000134	2048	9	23.700191			
100000134	2048	10	23.025156			
100000134	5027	1	4.303223	SUNSET BLVD	NW	SUNSET BLVD & RAMP
100000134	5027	2	4.453312			
100000134	5027	3	4.45668			
100000134	5027	4	4.361924			
100000134	5027	5	4.569486			
100000134	5027	6	5.107332			
100000134	5027	7	3.742612			
100000134	5027	8	4.231276			
100000134	5027	9	4.1237			
100000134	5027	10	4.589635			
100000134	5030	1	3.78278	SUNSET BLVD	SE	SUNSET BLVD & RAMP
100000134	5030	2	3.699464			
100000134	5030	3	3.884836			
100000134	5030	4	3.645628			
100000134	5030	5	3.898926			
100000134	5030	6	4.246387			
100000134	5030	7	3.923378			
100000134	5030	8	3.686358			
100000134	5030	9	3.659854			
100000134	5030	10	4.051848			
100000135	2039	1	12.146383	I-20 EB OFF-RAMP	NE	SUNSET BLVD & I-20 EB OFF-RAMP
100000135	2039	2	12.760306			
100000135	2039	3	13.509274			
100000135	2039	4	11.744697			
100000135	2039	5	11.981939			
100000135	2039	6	13.545581			
100000135	2039	7	11.902616			
100000135	2039	8	13.216761			
100000135	2039	9	12.884112			
100000135	2039	10	11.8843			
100000135	5022	1	5.415962	SUNSET BLVD	SE	SUNSET BLVD & I-20 EB OFF-RAMP
100000135	5022	2	6.648378			
100000135	5022	3	5.44561			
100000135	5022	4	5.673594			
100000135	5022	5	5.268435			
100000135	5022	6	7.025449			
100000135	5022	7	5.248598			
100000135	5022	8	5.527496			
100000135	5022	9	4.711816			
100000135	5022	10	5.11813			
100000135	5023	1	4.281547	SUNSET BLVD	NW	SUNSET BLVD & I-20 EB OFF-RAMP
100000135	5023	2	5.382638			
100000135	5023	3	5.154917			
100000135	5023	4	5.247721			
100000135	5023	5	5.406418			
100000135	5023	6	5.245215			

Node	Superlink	Run	Average Control Delay	Approach Street Name	Direction	Intersection
100000135	5023	7	5.039261			
100000135	5023	8	4.695579			
100000135	5023	9	4.498328			
100000135	5023	10	4.640819			
100000136	5021	1	28.449074	SUNSET BLVD	SE	SUNSET BLVD, CROMER RD & DAVEGA DR
100000136	5021	2	29.4825			
100000136	5021	3	27.374226			
100000136	5021	4	29.999804			
100000136	5021	5	26.710376			
100000136	5021	6	30.824954			
100000136	5021	7	25.261075			
100000136	5021	8	29.353478			
100000136	5021	9	27.93496			
100000136	5021	10	27.335717			
100000136	5362	1	267.999294	CROMER RD	NE	SUNSET BLVD, CROMER RD & DAVEGA DR
100000136	5362	2	224.740869			
100000136	5362	3	216.424309			
100000136	5362	4	207.693798			
100000136	5362	5	277.915232			
100000136	5362	6	317.928042			
100000136	5362	7	189.099349			
100000136	5362	8	190.335505			
100000136	5362	9	288.151039			
100000136	5362	10	256.150898			
100000136	5364	1	30.307103	SUNSET BLVD	NW	SUNSET BLVD, CROMER RD & DAVEGA DR
100000136	5364	2	32.657131			
100000136	5364	3	42.563398			
100000136	5364	4	33.364867			
100000136	5364	5	30.805197			
100000136	5364	6	38.053758			
100000136	5364	7	30.404542			
100000136	5364	8	27.111781			
100000136	5364	9	30.717911			
100000136	5364	10	35.508144			
100000136	6459	1	12.68464	DAVEGA DR	SW	SUNSET BLVD, CROMER RD & DAVEGA DR
100000136	6459	2	12.549157			
100000136	6459	3	20.900024			
100000136	6459	4	12.510695			
100000136	6459	5	14.326146			
100000136	6459	6	13.532362			
100000136	6459	7	16.079964			
100000136	6459	8	12.670714			
100000136	6459	9	13.755716			
100000136	6459	10	14.991772			
100000138	2052	1	0	RAMP	NW	RAMP, SUNSET BLVD & I-20 EXIT 61 WB ON RAMP
100000138	2052	2	0			
100000138	2052	3	0			
100000138	2052	4	0			
100000138	2052	5	0			
100000138	2052	6	0			
100000138	2052	7	0			
100000138	2052	8	0			
100000138	2052	9	0			
100000138	2052	10	0			
100000138	5030	1	0	SUNSET BLVD	NW	RAMP, SUNSET BLVD & I-20 EXIT 61 WB ON RAMP
100000138	5030	2	0			
100000138	5030	3	0			
100000138	5030	4	0			
100000138	5030	5	0			
100000138	5030	6	0			
100000138	5030	7	0			
100000138	5030	8	0			
100000138	5030	9	0			
100000138	5030	10	0			
100000138	6553	1	7.073289	SUNSET BLVD	SE	RAMP, SUNSET BLVD & I-20 EXIT 61 WB ON RAMP
100000138	6553	2	8.253304			
100000138	6553	3	7.356029			
100000138	6553	4	7.865228			
100000138	6553	5	7.347754			
100000138	6553	6	8.512637			
100000138	6553	7	7.757131			
100000138	6553	8	6.24963			
100000138	6553	9	6.187803			
100000138	6553	10	7.87826			
100000139	2065	1	27.859616	RAMP	S	RAMP & BUSH RIVER RD
100000139	2065	2	30.283374			
100000139	2065	3	27.449455			
100000139	2065	4	30.662701			
100000139	2065	5	36.0603			
100000139	2065	6	28.094956			
100000139	2065	7	29.6601			
100000139	2065	8	34.255203			
100000139	2065	9	27.965462			
100000139	2065	10	32.851753			
100000139	5033	1	8.244705	BUSH RIVER RD	NW	RAMP & BUSH RIVER RD
100000139	5033	2	7.360616			
100000139	5033	3	4.494167			
100000139	5033	4	5.900479			
100000139	5033	5	10.074751			
100000139	5033	6	7.853022			
100000139	5033	7	9.833433			
100000139	5033	8	7.435242			
100000139	5033	9	9.349014			
100000139	5033	10	6.786071			
100000139	5034	1	5.691085	BUSH RIVER RD	SE	RAMP & BUSH RIVER RD
100000139	5034	2	5.663389			
100000139	5034	3	4.7178			
100000139	5034	4	5.196783			
100000139	5034	5	6.615973			
100000139	5034	6	6.679112			
100000139	5034	7	6.979039			
100000139	5034	8	5.514796			
100000139	5034	9	6.957863			
100000139	5034	10	5.532693			
100000140	5376	1	5.077537	SUNSET BLVD	W	SUMMER PLACE DR, SUNSET BLVD & FAIRLANE DR
100000140	5376	2	4.395646			
100000140	5376	3	6.085122			
100000140	5376	4	5.899777			
100000140	5376	5	5.357844			
100000140	5376	6	5.106257			
100000140	5376	7	5.974719			
100000140	5376	8	5.61837			

Node	Superlink	Run	Average Control Delay	Approach Street Name	Direction	Intersection
100000140	5376	9	5.639877			
100000140	5376	10	5.475013			
100000140	5378	1	44.31958	SUMMER PLACE DR	N	SUMMER PLACE DR, SUNSET BLVD & FAIRLANE DR
100000140	5378	2	41.042747			
100000140	5378	3	42.654243			
100000140	5378	4	43.645595			
100000140	5378	5	41.973732			
100000140	5378	6	43.710141			
100000140	5378	7	45.047504			
100000140	5378	8	42.1695			
100000140	5378	9	40.925304			
100000140	5378	10	45.127176			
100000140	6489	1		FAIRLANE DR	S	SUMMER PLACE DR, SUNSET BLVD & FAIRLANE DR
100000140	6489	2				
100000140	6489	3				
100000140	6489	4				
100000140	6489	5				
100000140	6489	6				
100000140	6489	7				
100000140	6489	8				
100000140	6489	9				
100000140	6489	10				
100000140	6764	1	6.325141	SUNSET BLVD	E	SUMMER PLACE DR, SUNSET BLVD & FAIRLANE DR
100000140	6764	2	4.104452			
100000140	6764	3	6.883595			
100000140	6764	4	6.156924			
100000140	6764	5	5.847226			
100000140	6764	6	5.014672			
100000140	6764	7	7.243027			
100000140	6764	8	5.980306			
100000140	6764	9	5.885446			
100000140	6764	10	8.258923			
100000142	2053	1	14.803771	RAMP	NE	BUSH RIVER RD & RAMP
100000142	2053	2	13.415449			
100000142	2053	3	14.338793			
100000142	2053	4	13.59845			
100000142	2053	5	12.572438			
100000142	2053	6	14.886546			
100000142	2053	7	14.518178			
100000142	2053	8	13.326392			
100000142	2053	9	12.099919			
100000142	2053	10	13.649647			
100000142	5036	1	4.088257	BUSH RIVER RD	SE	BUSH RIVER RD & RAMP
100000142	5036	2	4.096154			
100000142	5036	3	3.544252			
100000142	5036	4	4.164165			
100000142	5036	5	2.655196			
100000142	5036	6	3.036269			
100000142	5036	7	2.155207			
100000142	5036	8	4.137992			
100000142	5036	9	3.741094			
100000142	5036	10	4.571031			
100000142	5037	1	5.471532	BUSH RIVER RD	NW	BUSH RIVER RD & RAMP
100000142	5037	2	7.039562			
100000142	5037	3	6.347793			
100000142	5037	4	8.6486			
100000142	5037	5	8.371515			
100000142	5037	6	5.992114			
100000142	5037	7	5.620971			
100000142	5037	8	7.534235			
100000142	5037	9	7.789129			
100000142	5037	10	8.006894			
100000143	5372	1	0	SUNSET BLVD	E	SUNSET BLVD & HEBRON DR
100000143	5372	2	0			
100000143	5372	3	0			
100000143	5372	4	0			
100000143	5372	5	0			
100000143	5372	6	0			
100000143	5372	7	0			
100000143	5372	8	0			
100000143	5372	9	0			
100000143	5372	10	0			
100000143	6763	1		HEBRON DR	N	SUNSET BLVD & HEBRON DR
100000143	6763	2				
100000143	6763	3				
100000143	6763	4				
100000143	6763	5				
100000143	6763	6				
100000143	6763	7				
100000143	6763	8				
100000143	6763	9				
100000143	6763	10				
100000143	6764	1	0	SUNSET BLVD	W	SUNSET BLVD & HEBRON DR
100000143	6764	2	0			
100000143	6764	3	0			
100000143	6764	4	0			
100000143	6764	5	0			
100000143	6764	6	0			
100000143	6764	7	0			
100000143	6764	8	0			
100000143	6764	9	0			
100000143	6764	10	0			
100000144	5376	1	4.213905	SUNSET BLVD	E	SUNSET BLVD, W. HOSPTIAL DR & SUNSET CT
100000144	5376	2	2.907773			
100000144	5376	3	2.498477			
100000144	5376	4	3.118545			
100000144	5376	5	2.88679			
100000144	5376	6	3.428176			
100000144	5376	7	2.616356			
100000144	5376	8	3.542391			
100000144	5376	9	3.313327			
100000144	5376	10	2.511717			
100000144	6760	1	57.730226	W. HOSPTIAL DR	S	SUNSET BLVD, W. HOSPTIAL DR & SUNSET CT
100000144	6760	2	58.836807			
100000144	6760	3	56.881325			
100000144	6760	4	56.128143			
100000144	6760	5	58.84011			
100000144	6760	6	52.363557			
100000144	6760	7	59.123351			
100000144	6760	8	57.69831			
100000144	6760	9	53.486006			
100000144	6760	10	55.652433			

Node	Superlink	Run	Average Control Delay	Approach Street Name	Direction	Intersection
100000144	6761	1		SUNSET CT	N	SUNSET BLVD, W. HOSPTIAL DR & SUNSET CT
100000144	6761	2				
100000144	6761	3				
100000144	6761	4				
100000144	6761	5				
100000144	6761	6				
100000144	6761	7				
100000144	6761	8				
100000144	6761	9				
100000144	6761	10				
100000144	6762	1	12.633003	SUNSET BLVD	W	SUNSET BLVD, W. HOSPTIAL DR & SUNSET CT
100000144	6762	2	14.952563			
100000144	6762	3	10.926221			
100000144	6762	4	12.157322			
100000144	6762	5	14.858029			
100000144	6762	6	15.22649			
100000144	6762	7	14.490623			
100000144	6762	8	10.893625			
100000144	6762	9	12.53794			
100000144	6762	10	8.858011			
100000150	3361	1	13.667221	I-26 EXIT 101 EB OFF RAMP	SW	I-26 EXIT 101 EB OFF RAMP & BROAD RIVER RD
100000150	3361	2	12.32801			
100000150	3361	3	14.859368			
100000150	3361	4	13.300484			
100000150	3361	5	13.073944			
100000150	3361	6	13.369437			
100000150	3361	7	12.940067			
100000150	3361	8	12.527455			
100000150	3361	9	17.627641			
100000150	3361	10	13.105588			
100000150	5071	1	0	BROAD RIVER RD	E	I-26 EXIT 101 EB OFF RAMP & BROAD RIVER RD
100000150	5071	2	0			
100000150	5071	3	0			
100000150	5071	4	0			
100000150	5071	5	0			
100000150	5071	6	0			
100000150	5071	7	0			
100000150	5071	8	0			
100000150	5071	9	0			
100000150	5071	10	0			
100000150	5073	1	0.065576	BROAD RIVER RD	W	I-26 EXIT 101 EB OFF RAMP & BROAD RIVER RD
100000150	5073	2	0.055839			
100000150	5073	3	0.068686			
100000150	5073	4	0.085994			
100000150	5073	5	0.083744			
100000150	5073	6	0.058651			
100000150	5073	7	0.076933			
100000150	5073	8	0.075702			
100000150	5073	9	0.04816			
100000150	5073	10	0.071747			
100000151	5072	1	0.298097	BROAD RIVER RD	E	BROAD RIVER RD & ON-RAMP from WB
100000151	5072	2	0.222459			
100000151	5072	3	0.32384			
100000151	5072	4	0.172092			
100000151	5072	5	0.343788			
100000151	5072	6	0.142751			
100000151	5072	7	0.220193			
100000151	5072	8	0.19505			
100000151	5072	9	0.164151			
100000151	5072	10	0.145001			
100000151	5075	1	2.045445	BROAD RIVER RD	W	BROAD RIVER RD & ON-RAMP from WB
100000151	5075	2	2.310435			
100000151	5075	3	3.53624			
100000151	5075	4	3.242842			
100000151	5075	5	2.997339			
100000151	5075	6	2.865514			
100000151	5075	7	2.124133			
100000151	5075	8	3.005185			
100000151	5075	9	2.544567			
100000151	5075	10	2.297362			
100000155	6084	1	4.330922	BROAD RIVER RD	N	BEATTY RD & BROAD RIVER RD
100000155	6084	2	3.24034			
100000155	6084	3	3.269435			
100000155	6084	4	2.775133			
100000155	6084	5	4.772119			
100000155	6084	6	3.871405			
100000155	6084	7	3.455716			
100000155	6084	8	4.911312			
100000155	6084	9	3.960574			
100000155	6084	10	4.406968			
100000155	6355	1	23.819007	BEATTY RD	E	BEATTY RD & BROAD RIVER RD
100000155	6355	2	18.198447			
100000155	6355	3	34.6292			
100000155	6355	4	23.869611			
100000155	6355	5	25.905325			
100000155	6355	6	21.613739			
100000155	6355	7	30.271964			
100000155	6355	8	27.225343			
100000155	6355	9	26.889862			
100000155	6355	10	23.897919			
100000155	6357	1	9.687351	BROAD RIVER RD	S	BEATTY RD & BROAD RIVER RD
100000155	6357	2	10.285435			
100000155	6357	3	9.08375			
100000155	6357	4	9.769596			
100000155	6357	5	11.162194			
100000155	6357	6	11.836209			
100000155	6357	7	11.203426			
100000155	6357	8	12.559041			
100000155	6357	9	10.482707			
100000155	6357	10	12.011823			
100000163	4947	1	5.288786	SUNSET BLVD	E	MCSWAIN DR, SUNSET BLVD & CHRIS DR
100000163	4947	2	5.350454			
100000163	4947	3	4.931019			
100000163	4947	4	5.491802			
100000163	4947	5	4.645172			
100000163	4947	6	5.288937			
100000163	4947	7	5.804853			
100000163	4947	8	5.942528			
100000163	4947	9	5.554682			
100000163	4947	10	6.24799			
100000163	5388	1	4.434068	SUNSET BLVD	W	MCSWAIN DR, SUNSET BLVD & CHRIS DR
100000163	5388	2	4.235747			

Node	Superlink	Run	Average Control Delay	Approach Street Name	Direction	Intersection
100000163	5388	3	4.902402			
100000163	5388	4	4.383065			
100000163	5388	5	5.180779			
100000163	5388	6	4.598673			
100000163	5388	7	3.734271			
100000163	5388	8	3.731549			
100000163	5388	9	4.151174			
100000163	5388	10	4.520848			
100000163	5389	1	19.192236	MCSWAIN DR	S	MCSWAIN DR, SUNSET BLVD & CHRIS DR
100000163	5389	2	16.348812			
100000163	5389	3	15.003023			
100000163	5389	4	15.921292			
100000163	5389	5	16.863825			
100000163	5389	6	16.87775			
100000163	5389	7	16.00382			
100000163	5389	8	15.960786			
100000163	5389	9	19.233055			
100000163	5389	10	15.97821			
100000163	5418	1	74.060053	CHRIS DR	N	MCSWAIN DR, SUNSET BLVD & CHRIS DR
100000163	5418	2	84.210783			
100000163	5418	3	74.309635			
100000163	5418	4	84.49525			
100000163	5418	5	77.630815			
100000163	5418	6	68.682583			
100000163	5418	7	89.047702			
100000163	5418	8	82.912482			
100000163	5418	9	82.908604			
100000163	5418	10	74.150135			
100000164	3354	1	0	I-26 EXIT 102 EB OFF RAMP	W	LAKE MURRAY BLVD & I-26 EXIT 102 EB OFF RAMF
100000164	3354	2	0			
100000164	3354	3	0			
100000164	3354	4	0			
100000164	3354	5	0			
100000164	3354	6	0			
100000164	3354	7	0			
100000164	3354	8	0			
100000164	3354	9	0			
100000164	3354	10	0			
100000164	5084	1	0	LAKE MURRAY BLVD	E	LAKE MURRAY BLVD & I-26 EXIT 102 EB OFF RAMF
100000164	5084	2	0			
100000164	5084	3	0			
100000164	5084	4	0			
100000164	5084	5	0			
100000164	5084	6	0			
100000164	5084	7	0			
100000164	5084	8	0			
100000164	5084	9	0			
100000164	5084	10	0			
100000164	5085	1	0.000478	LAKE MURRAY BLVD	W	LAKE MURRAY BLVD & I-26 EXIT 102 EB OFF RAMF
100000164	5085	2	0			
100000164	5085	3	0			
100000164	5085	4	0			
100000164	5085	5	0.0015			
100000164	5085	6	0.001353			
100000164	5085	7	0			
100000164	5085	8	0			
100000164	5085	9	0			
100000164	5085	10	0.000336			
100000165	3330	1	40.09247	EXIT 103 WB OFF RAMP	SE	HARBISON BLVD, EXIT 103 WB OFF RAMP, WOODCROSS DR & EXIT 103 WB ON RAMP
100000165	3330	2	44.696739			
100000165	3330	3	46.190661			
100000165	3330	4	42.759288			
100000165	3330	5	40.199048			
100000165	3330	6	39.223155			
100000165	3330	7	43.138714			
100000165	3330	8	39.613612			
100000165	3330	9	49.682278			
100000165	3330	10	49.610395			
100000165	5096	1	7.22074	HARBISON BLVD	NE	HARBISON BLVD, EXIT 103 WB OFF RAMP, WOODCROSS DR & EXIT 103 WB ON RAMP
100000165	5096	2	6.512188			
100000165	5096	3	3.896929			
100000165	5096	4	8.595872			
100000165	5096	5	9.865616			
100000165	5096	6	4.791446			
100000165	5096	7	4.147367			
100000165	5096	8	5.679627			
100000165	5096	9	8.327518			
100000165	5096	10	2.309097			
100000165	5102	1	3.441029	HARBISON BLVD	SW	HARBISON BLVD, EXIT 103 WB OFF RAMP, WOODCROSS DR & EXIT 103 WB ON RAMP
100000165	5102	2	3.091927			
100000165	5102	3	3.551091			
100000165	5102	4	3.632393			
100000165	5102	5	3.551507			
100000165	5102	6	3.383209			
100000165	5102	7	2.949901			
100000165	5102	8	3.313433			
100000165	5102	9	2.515896			
100000165	5102	10	3.38064			
100000165	5103	1	50.388168	WOODCROSS DR	NW	HARBISON BLVD, EXIT 103 WB OFF RAMP, WOODCROSS DR & EXIT 103 WB ON RAMP
100000165	5103	2	48.858246			
100000165	5103	3	50.88297			
100000165	5103	4	51.478897			
100000165	5103	5	48.408074			
100000165	5103	6	47.758238			
100000165	5103	7	45.643456			
100000165	5103	8	48.938263			
100000165	5103	9	47.139167			
100000165	5103	10	52.643296			
100000166	3343	1	0	I-26 EXIT 102 EBL OFF RAMP	E	LAKE MURRAY BLVD & I-26 EXIT 102 EBL OFF RAMP
100000166	3343	2	0			
100000166	3343	3	0			
100000166	3343	4	0			
100000166	3343	5	0			
100000166	3343	6	0			
100000166	3343	7	0			
100000166	3343	8	0			
100000166	3343	9	0			
100000166	3343	10	0			
100000166	5087	1	0	LAKE MURRAY BLVD	E	LAKE MURRAY BLVD & I-26 EXIT 102 EBL OFF RAMP
100000166	5087	2	0			
100000166	5087	3	0			
100000166	5087	4	0			

Node	Superlink	Run	Average Control Delay	Approach Street Name	Direction	Intersection
100000166	5087	5	0			
100000166	5087	6	0			
100000166	5087	7	0			
100000166	5087	8	0			
100000166	5087	9	0			
100000166	5087	10	0			
100000166	5088	1	0	LAKE MURRAY BLVD	W	LAKE MURRAY BLVD & I-26 EXIT 102 EBL OFF RAMP
100000166	5088	2	0			
100000166	5088	3	0			
100000166	5088	4	0			
100000166	5088	5	0			
100000166	5088	6	0			
100000166	5088	7	0			
100000166	5088	8	0			
100000166	5088	9	0			
100000166	5088	10	0			
100000167	3339	1	0	I-26 EXIT 102 WBL OFF RAMP	W	I-26 EXIT 102 WBL OFF RAMP & LAKE MURRAY BLVD
100000167	3339	2	0			
100000167	3339	3	0			
100000167	3339	4	0			
100000167	3339	5	0			
100000167	3339	6	0			
100000167	3339	7	0			
100000167	3339	8	0			
100000167	3339	9	0			
100000167	3339	10	0			
100000167	5088	1	0	LAKE MURRAY BLVD	E	I-26 EXIT 102 WBL OFF RAMP & LAKE MURRAY BLVD
100000167	5088	2	0			
100000167	5088	3	0			
100000167	5088	4	0			
100000167	5088	5	0			
100000167	5088	6	0			
100000167	5088	7	0			
100000167	5088	8	0			
100000167	5088	9	0			
100000167	5088	10	0			
100000167	5090	1	0	LAKE MURRAY BLVD	W	I-26 EXIT 102 WBL OFF RAMP & LAKE MURRAY BLVD
100000167	5090	2	0			
100000167	5090	3	0			
100000167	5090	4	0			
100000167	5090	5	0			
100000167	5090	6	0			
100000167	5090	7	0			
100000167	5090	8	0			
100000167	5090	9	0			
100000167	5090	10	0			
100000168	5366	1	22.35275	LEAPHART RD	N	SUNSET BLVD & LEAPHART RD
100000168	5366	2	21.59068			
100000168	5366	3	21.732891			
100000168	5366	4	21.777484			
100000168	5366	5	22.053769			
100000168	5366	6	20.730336			
100000168	5366	7	22.529638			
100000168	5366	8	20.247928			
100000168	5366	9	20.436296			
100000168	5366	10	22.445935			
100000168	5368	1	3.617801	SUNSET BLVD	E	SUNSET BLVD & LEAPHART RD
100000168	5368	2	4.011488			
100000168	5368	3	4.42789			
100000168	5368	4	4.131434			
100000168	5368	5	3.907015			
100000168	5368	6	4.211294			
100000168	5368	7	3.529406			
100000168	5368	8	4.025533			
100000168	5368	9	4.260914			
100000168	5368	10	4.077499			
100000168	5372	1	6.57923	SUNSET BLVD	W	SUNSET BLVD & LEAPHART RD
100000168	5372	2	7.454486			
100000168	5372	3	7.093111			
100000168	5372	4	7.085626			
100000168	5372	5	6.208775			
100000168	5372	6	9.026727			
100000168	5372	7	7.10014			
100000168	5372	8	6.728324			
100000168	5372	9	7.487828			
100000168	5372	10	6.171406			
100000171	3342	1	0	I-26 EXIT 102 WB OFF RAMP	E	LAKE MURRAY BLVD & I-26 EXIT 102 WB OFF RAMP
100000171	3342	2	0			
100000171	3342	3	0			
100000171	3342	4	0			
100000171	3342	5	0			
100000171	3342	6	0			
100000171	3342	7	0			
100000171	3342	8	0			
100000171	3342	9	0			
100000171	3342	10	0			
100000171	5092	1	0.007808	LAKE MURRAY BLVD	E	LAKE MURRAY BLVD & I-26 EXIT 102 WB OFF RAMP
100000171	5092	2	0.012378			
100000171	5092	3	0.004082			
100000171	5092	4	0.009716			
100000171	5092	5	0.002565			
100000171	5092	6	0.007059			
100000171	5092	7	0.005566			
100000171	5092	8	0.007673			
100000171	5092	9	0.010048			
100000171	5092	10	0.011162			
100000171	5093	1	0	LAKE MURRAY BLVD	W	LAKE MURRAY BLVD & I-26 EXIT 102 WB OFF RAMP
100000171	5093	2	0			
100000171	5093	3	0			
100000171	5093	4	0			
100000171	5093	5	0			
100000171	5093	6	0			
100000171	5093	7	0			
100000171	5093	8	0			
100000171	5093	9	0			
100000171	5093	10	0			
100000173	3212	1	56.755167		103 SE	HARBISON BLVD, 103 & RAMP
100000173	3212	2	51.819448			
100000173	3212	3	49.471488			
100000173	3212	4	35.768866			
100000173	3212	5	46.49046			
100000173	3212	6	47.017107			

Node	Superlink	Run	Average Control Delay	Approach Street Name	Direction	Intersection
100000173	3212	7	49.715321			
100000173	3212	8	46.347053			
100000173	3212	9	54.814769			
100000173	3212	10	45.778391			
100000173	3213	1	8.653458	103	S	HARBISON BLVD, 103 & RAMP
100000173	3213	2	7.879314			
100000173	3213	3	8.606622			
100000173	3213	4	6.986359			
100000173	3213	5	7.267008			
100000173	3213	6	8.451475			
100000173	3213	7	7.752075			
100000173	3213	8	7.265711			
100000173	3213	9	7.829828			
100000173	3213	10	8.098757			
100000173	5097	1	2.359343	HARBISON BLVD	NE	HARBISON BLVD, 103 & RAMP
100000173	5097	2	2.930487			
100000173	5097	3	2.871413			
100000173	5097	4	3.519626			
100000173	5097	5	4.622509			
100000173	5097	6	3.360294			
100000173	5097	7	3.63876			
100000173	5097	8	3.093854			
100000173	5097	9	2.471019			
100000173	5097	10	3.540076			
100000173	5099	1	6.693044	HARBISON BLVD	SW	HARBISON BLVD, 103 & RAMP
100000173	5099	2	4.946501			
100000173	5099	3	5.876871			
100000173	5099	4	6.751432			
100000173	5099	5	5.163975			
100000173	5099	6	5.619948			
100000173	5099	7	4.997286			
100000173	5099	8	6.097601			
100000173	5099	9	6.469298			
100000173	5099	10	5.789833			
100000175	3234	1	45.201434	RAMP	SE	PINEY GROVE RD & RAMP
100000175	3234	2	41.682025			
100000175	3234	3	43.476219			
100000175	3234	4	43.159705			
100000175	3234	5	55.146144			
100000175	3234	6	42.460875			
100000175	3234	7	42.816537			
100000175	3234	8	41.44491			
100000175	3234	9	40.935568			
100000175	3234	10	38.16562			
100000175	5112	1	8.878641	PINEY GROVE RD	W	PINEY GROVE RD & RAMP
100000175	5112	2	7.784696			
100000175	5112	3	4.998621			
100000175	5112	4	8.789075			
100000175	5112	5	5.943804			
100000175	5112	6	6.658243			
100000175	5112	7	8.077838			
100000175	5112	8	7.098155			
100000175	5112	9	7.921265			
100000175	5112	10	6.385905			
100000175	6544	1	7.324527	PINEY GROVE RD	E	PINEY GROVE RD & RAMP
100000175	6544	2	8.153873			
100000175	6544	3	6.955254			
100000175	6544	4	7.002384			
100000175	6544	5	6.95479			
100000175	6544	6	9.225513			
100000175	6544	7	7.715835			
100000175	6544	8	8.193022			
100000175	6544	9	7.809623			
100000175	6544	10	7.983386			
100000177	5112	1	13.755621	PINEY GROVE RD	E	PINEY GROVE RD, EXIT 104 WB OFF RAMP & EXIT 104 WB ON RAMP
100000177	5112	2	12.504833			
100000177	5112	3	11.189552			
100000177	5112	4	12.971045			
100000177	5112	5	11.435591			
100000177	5112	6	13.002633			
100000177	5112	7	14.82243			
100000177	5112	8	13.590451			
100000177	5112	9	12.214593			
100000177	5112	10	14.078207			
100000177	5113	1	24.210853	PINEY GROVE RD	W	PINEY GROVE RD, EXIT 104 WB OFF RAMP & EXIT 104 WB ON RAMP
100000177	5113	2	24.733751			
100000177	5113	3	21.185397			
100000177	5113	4	27.236553			
100000177	5113	5	21.83595			
100000177	5113	6	21.360223			
100000177	5113	7	24.610028			
100000177	5113	8	20.500674			
100000177	5113	9	27.47294			
100000177	5113	10	23.155324			
100000177	6513	1	6.53187	EXIT 104 WB OFF RAMP	N	PINEY GROVE RD, EXIT 104 WB OFF RAMP & EXIT 104 WB ON RAMP
100000177	6513	2	7.192			
100000177	6513	3	6.895313			
100000177	6513	4	6.717692			
100000177	6513	5	7.378954			
100000177	6513	6	6.735385			
100000177	6513	7	6.891039			
100000177	6513	8	7.905487			
100000177	6513	9	6.811806			
100000177	6513	10	6.491139			
100000177	6514	1	17.6017	EXIT 104 WB OFF RAMP	N	PINEY GROVE RD, EXIT 104 WB OFF RAMP & EXIT 104 WB ON RAMP
100000177	6514	2	16.612548			
100000177	6514	3	16.907587			
100000177	6514	4	16.725941			
100000177	6514	5	16.79476			
100000177	6514	6	17.266416			
100000177	6514	7	17.429783			
100000177	6514	8	15.650082			
100000177	6514	9	15.624501			
100000177	6514	10	18.370928			
100000178	3301	1	34.496399	RAMP	SE	ST ANDREWS RD, RAMP, WOODLAND HILLS RD & I-26 EXIT 106 EB ON RAMP
100000178	3301	2	32.788526			
100000178	3301	3	30.787403			
100000178	3301	4	34.080214			
100000178	3301	5	32.177544			
100000178	3301	6	32.823132			
100000178	3301	7	34.384176			
100000178	3301	8	31.974963			

Node	Superlink	Run	Average Control Delay	Approach Street Name	Direction	Intersection
100000178	3301	9	33.370986			
100000178	3301	10	33.802775			
100000178	5118	1	3.150552	ST ANDREWS RD	E	ST ANDREWS RD, RAMP, WOODLAND HILLS RD & I-26 EXIT 106 EB ON RAMP
100000178	5118	2	2.983392			
100000178	5118	3	2.963635			
100000178	5118	4	3.188629			
100000178	5118	5	3.329987			
100000178	5118	6	3.152964			
100000178	5118	7	3.282855			
100000178	5118	8	3.301294			
100000178	5118	9	3.252613			
100000178	5118	10	3.117398			
100000178	5119	1	23.200117	WOODLAND HILLS RD	N	ST ANDREWS RD, RAMP, WOODLAND HILLS RD & I-26 EXIT 106 EB ON RAMP
100000178	5119	2	24.917569			
100000178	5119	3	22.691877			
100000178	5119	4	26.538946			
100000178	5119	5	22.893243			
100000178	5119	6	22.597977			
100000178	5119	7	24.393941			
100000178	5119	8	23.836304			
100000178	5119	9	23.683692			
100000178	5119	10	23.651592			
100000178	5120	1	12.632688	ST ANDREWS RD	W	ST ANDREWS RD, RAMP, WOODLAND HILLS RD & I-26 EXIT 106 EB ON RAMP
100000178	5120	2	10.133622			
100000178	5120	3	8.917807			
100000178	5120	4	8.018588			
100000178	5120	5	10.381747			
100000178	5120	6	9.427605			
100000178	5120	7	10.965587			
100000178	5120	8	12.310366			
100000178	5120	9	10.122768			
100000178	5120	10	13.551038			
100000179	3219	1	0	RAMP	S	ST ANDREWS RD & RAMP
100000179	3219	2	0			
100000179	3219	3	0			
100000179	3219	4	0			
100000179	3219	5	0			
100000179	3219	6	0			
100000179	3219	7	0			
100000179	3219	8	0			
100000179	3219	9	0			
100000179	3219	10	0			
100000179	5116	1	22.183619	ST ANDREWS RD	E	ST ANDREWS RD & RAMP
100000179	5116	2	25.704006			
100000179	5116	3	19.745452			
100000179	5116	4	18.537713			
100000179	5116	5	21.679452			
100000179	5116	6	22.052669			
100000179	5116	7	23.971218			
100000179	5116	8	25.352491			
100000179	5116	9	20.119995			
100000179	5116	10	23.792011			
100000179	5118	1	0	ST ANDREWS RD	W	ST ANDREWS RD & RAMP
100000179	5118	2	0			
100000179	5118	3	0			
100000179	5118	4	0			
100000179	5118	5	0			
100000179	5118	6	0			
100000179	5118	7	0			
100000179	5118	8	0			
100000179	5118	9	0			
100000179	5118	10	0			
100000182	3292	1	0	EXIT 106 WB OFF RAMP	NE	ST ANDREWS RD, EXIT 106 WB OFF RAMP & EXIT 106 WB ON RAMP
100000182	3292	2	0			
100000182	3292	3	0			
100000182	3292	4	0			
100000182	3292	5	0			
100000182	3292	6	0			
100000182	3292	7	0			
100000182	3292	8	0			
100000182	3292	9	0			
100000182	3292	10	0			
100000182	5123	1	0	ST ANDREWS RD	E	ST ANDREWS RD, EXIT 106 WB OFF RAMP & EXIT 106 WB ON RAMP
100000182	5123	2	0			
100000182	5123	3	0			
100000182	5123	4	0			
100000182	5123	5	0			
100000182	5123	6	0			
100000182	5123	7	0			
100000182	5123	8	0			
100000182	5123	9	0			
100000182	5123	10	0			
100000182	5124	1	0	ST ANDREWS RD	SW	ST ANDREWS RD, EXIT 106 WB OFF RAMP & EXIT 106 WB ON RAMP
100000182	5124	2	0			
100000182	5124	3	0			
100000182	5124	4	0			
100000182	5124	5	0			
100000182	5124	6	0			
100000182	5124	7	0			
100000182	5124	8	0			
100000182	5124	9	0			
100000182	5124	10	0			
100000184	5499	1	14.06618	N ARROWWOOD RD	S	ARROWWOOD RD, BUSH RIVER RD & N ARROWWOOD RD
100000184	5499	2	14.262297			
100000184	5499	3	15.511202			
100000184	5499	4	16.237134			
100000184	5499	5	16.239366			
100000184	5499	6	14.354694			
100000184	5499	7	16.508431			
100000184	5499	8	17.295147			
100000184	5499	9	14.377151			
100000184	5499	10	16.579977			
100000184	5500	1	36.239888	ARROWWOOD RD	N	ARROWWOOD RD, BUSH RIVER RD & N ARROWWOOD RD
100000184	5500	2	37.512739			
100000184	5500	3	40.872903			
100000184	5500	4	38.875384			
100000184	5500	5	38.848064			
100000184	5500	6	34.341074			
100000184	5500	7	37.682548			
100000184	5500	8	40.250685			
100000184	5500	9	36.277084			
100000184	5500	10	39.943286			

Node	Superlink	Run	Average Control Delay	Approach Street Name	Direction	Intersection
100000184	6497	1	7.563826	BUSH RIVER RD	W	ARROWWOOD RD, BUSH RIVER RD & N ARROWWOOD RD
100000184	6497	2	6.971629			
100000184	6497	3	7.384399			
100000184	6497	4	9.05904			
100000184	6497	5	7.304131			
100000184	6497	6	8.413767			
100000184	6497	7	7.816229			
100000184	6497	8	8.20352			
100000184	6497	9	8.469605			
100000184	6497	10	6.369013			
100000184	6505	1	8.679359	BUSH RIVER RD	E	ARROWWOOD RD, BUSH RIVER RD & N ARROWWOOD RD
100000184	6505	2	7.908492			
100000184	6505	3	8.526207			
100000184	6505	4	9.264424			
100000184	6505	5	8.496449			
100000184	6505	6	9.214275			
100000184	6505	7	7.94867			
100000184	6505	8	7.819061			
100000184	6505	9	7.890537			
100000184	6505	10	7.714252			
100000185	3230	1	18.467112	RAMP	W	GREYSTONE BLVD, RAMP & I-126 EB ON RAMP FROM GREYSTONE BLVD
100000185	3230	2	19.624089			
100000185	3230	3	22.749029			
100000185	3230	4	15.207455			
100000185	3230	5	20.060629			
100000185	3230	6	15.420597			
100000185	3230	7	20.561357			
100000185	3230	8	21.197878			
100000185	3230	9	16.36878			
100000185	3230	10	21.830971			
100000185	5140	1	0.388318	GREYSTONE BLVD	N	GREYSTONE BLVD, RAMP & I-126 EB ON RAMP FROM GREYSTONE BLVD
100000185	5140	2	0.148497			
100000185	5140	3	0.322408			
100000185	5140	4	0.34796			
100000185	5140	5	0.414763			
100000185	5140	6	0.221174			
100000185	5140	7	0.239021			
100000185	5140	8	0.032855			
100000185	5140	9	0.31862			
100000185	5140	10	0.196417			
100000185	5141	1	0.935206	GREYSTONE BLVD	S	GREYSTONE BLVD, RAMP & I-126 EB ON RAMP FROM GREYSTONE BLVD
100000185	5141	2	0.636299			
100000185	5141	3	0.819046			
100000185	5141	4	0.742576			
100000185	5141	5	0.491849			
100000185	5141	6	0.710265			
100000185	5141	7	0.761131			
100000185	5141	8	0.629402			
100000185	5141	9	0.657959			
100000185	5141	10	0.902323			
100000186	4949	1	9.114013	SUNSET BLVD	W	HARBOR DR, SUNSET BLVD & E HOSPITAL DR
100000186	4949	2	8.212892			
100000186	4949	3	7.458124			
100000186	4949	4	9.710458			
100000186	4949	5	8.236809			
100000186	4949	6	6.849009			
100000186	4949	7	8.467954			
100000186	4949	8	7.347807			
100000186	4949	9	10.441526			
100000186	4949	10	8.45281			
100000186	5386	1	94.280318	HARBOR DR	N	HARBOR DR, SUNSET BLVD & E HOSPITAL DR
100000186	5386	2	81.772069			
100000186	5386	3	63.60831			
100000186	5386	4	77.3046			
100000186	5386	5	102.841799			
100000186	5386	6	50.874353			
100000186	5386	7	103.40695			
100000186	5386	8	59.764829			
100000186	5386	9	89.275422			
100000186	5386	10	70.610222			
100000186	5387	1	66.764623	E HOSPITAL DR	S	HARBOR DR, SUNSET BLVD & E HOSPITAL DR
100000186	5387	2	62.840658			
100000186	5387	3	62.035878			
100000186	5387	4	59.901941			
100000186	5387	5	59.080834			
100000186	5387	6	54.185853			
100000186	5387	7	59.030516			
100000186	5387	8	57.445846			
100000186	5387	9	64.876875			
100000186	5387	10	60.659679			
100000186	6762	1	20.736123	SUNSET BLVD	E	HARBOR DR, SUNSET BLVD & E HOSPITAL DR
100000186	6762	2	14.635942			
100000186	6762	3	13.15085			
100000186	6762	4	15.227796			
100000186	6762	5	17.15933			
100000186	6762	6	11.621362			
100000186	6762	7	15.154974			
100000186	6762	8	12.170517			
100000186	6762	9	17.480588			
100000186	6762	10	13.148732			
100000187	6057	1	16.902553	BROAD RIVER RD	NW	BROAD RIVER RD, BRIARGATE CIR & MARLEY DR
100000187	6057	2	18.111674			
100000187	6057	3	13.571062			
100000187	6057	4	16.384331			
100000187	6057	5	18.849608			
100000187	6057	6	19.168774			
100000187	6057	7	15.479017			
100000187	6057	8	21.704562			
100000187	6057	9	14.86299			
100000187	6057	10	22.356568			
100000187	6059	1	5.942072	BROAD RIVER RD	SE	BROAD RIVER RD, BRIARGATE CIR & MARLEY DR
100000187	6059	2	7.201066			
100000187	6059	3	11.169705			
100000187	6059	4	9.687269			
100000187	6059	5	14.453731			
100000187	6059	6	16.005435			
100000187	6059	7	14.587561			
100000187	6059	8	21.622154			
100000187	6059	9	5.566484			
100000187	6059	10	12.327547			
100000187	6060	1	74.094515	MARLEY DR	SW	BROAD RIVER RD, BRIARGATE CIR & MARLEY DR
100000187	6060	2	64.293191			

Node	Superlink	Run	Average Control Delay	Approach Street Name	Direction	Intersection
100000187	6060	3	99.040977			
100000187	6060	4	83.821667			
100000187	6060	5	104.526232			
100000187	6060	6	100.132186			
100000187	6060	7	65.681851			
100000187	6060	8	135.895854			
100000187	6060	9	59.059201			
100000187	6060	10	141.720525			
100000187	6061	1	26.30015	BRIARGATE CIR	NE	BROAD RIVER RD, BRIARGATE CIR & MARLEY DR
100000187	6061	2	27.953885			
100000187	6061	3	23.782678			
100000187	6061	4	34.856325			
100000187	6061	5	34.634674			
100000187	6061	6	30.977864			
100000187	6061	7	24.448238			
100000187	6061	8	29.340256			
100000187	6061	9	25.309413			
100000187	6061	10	28.366013			
100000188	3221	1	15.148172	RAMP	W	GREYSTONE BLVD & RAMP
100000188	3221	2	22.525976			
100000188	3221	3	17.900086			
100000188	3221	4	25.841678			
100000188	3221	5	21.266228			
100000188	3221	6	21.878673			
100000188	3221	7	21.097464			
100000188	3221	8	18.676127			
100000188	3221	9	27.665331			
100000188	3221	10	20.606934			
100000188	5143	1	1.160661	GREYSTONE BLVD	N	GREYSTONE BLVD & RAMP
100000188	5143	2	0.826964			
100000188	5143	3	1.027557			
100000188	5143	4	0.93509			
100000188	5143	5	0.894827			
100000188	5143	6	0.813737			
100000188	5143	7	0.6809			
100000188	5143	8	0.626072			
100000188	5143	9	0.723009			
100000188	5143	10	1.171601			
100000188	5144	1	0.039622	GREYSTONE BLVD	S	GREYSTONE BLVD & RAMP
100000188	5144	2	0.084997			
100000188	5144	3	0.065178			
100000188	5144	4	0.158611			
100000188	5144	5	0.050861			
100000188	5144	6	0.075069			
100000188	5144	7	0.086166			
100000188	5144	8	0.034417			
100000188	5144	9	0.098003			
100000188	5144	10	0.09098			
100000189	4346	1	39.1952	I-20 EXIT 65 WB OFF RAMP	SW	I-20 EXIT 65 WB OFF RAMP, BROAD RIVER RD & RAMF
100000189	4346	2	40.416275			
100000189	4346	3	39.840129			
100000189	4346	4	39.159805			
100000189	4346	5	41.626163			
100000189	4346	6	44.2075			
100000189	4346	7	44.656361			
100000189	4346	8	40.744493			
100000189	4346	9	40.20525			
100000189	4346	10	42.585945			
100000189	6057	1	39.5529	BROAD RIVER RD	SE	I-20 EXIT 65 WB OFF RAMP, BROAD RIVER RD & RAMF
100000189	6057	2	30.936438			
100000189	6057	3	32.846251			
100000189	6057	4	34.079107			
100000189	6057	5	44.842924			
100000189	6057	6	48.411276			
100000189	6057	7	40.742659			
100000189	6057	8	51.407855			
100000189	6057	9	11.682442			
100000189	6057	10	47.187548			
100000189	6447	1	6.49561	BROAD RIVER RD	NW	I-20 EXIT 65 WB OFF RAMP, BROAD RIVER RD & RAMF
100000189	6447	2	8.164897			
100000189	6447	3	6.446334			
100000189	6447	4	6.509727			
100000189	6447	5	6.053119			
100000189	6447	6	6.773599			
100000189	6447	7	6.719825			
100000189	6447	8	5.454121			
100000189	6447	9	5.7253			
100000189	6447	10	7.672662			
100000190	4341	1	46.145712	I-20 EXIT 65 EB OFF RAMP	E	BROAD RIVER RD, I-20 EXIT 65 EB OFF RAMP & SERVICE RD
100000190	4341	2	45.506018			
100000190	4341	3	42.393618			
100000190	4341	4	45.340552			
100000190	4341	5	43.740566			
100000190	4341	6	46.165687			
100000190	4341	7	38.68965			
100000190	4341	8	42.952997			
100000190	4341	9	47.274207			
100000190	4341	10	40.827255			
100000190	5148	1	1.683607	BROAD RIVER RD	SE	BROAD RIVER RD, I-20 EXIT 65 EB OFF RAMP & SERVICE RD
100000190	5148	2	1.636512			
100000190	5148	3	1.758572			
100000190	5148	4	1.695347			
100000190	5148	5	1.635794			
100000190	5148	6	1.758956			
100000190	5148	7	1.688756			
100000190	5148	8	1.579829			
100000190	5148	9	1.685994			
100000190	5148	10	1.596166			
100000190	6445	1	13.258956	BROAD RIVER RD	NW	BROAD RIVER RD, I-20 EXIT 65 EB OFF RAMP & SERVICE RD
100000190	6445	2	14.731953			
100000190	6445	3	15.788126			
100000190	6445	4	14.045256			
100000190	6445	5	15.054169			
100000190	6445	6	13.16199			
100000190	6445	7	15.467945			
100000190	6445	8	14.825355			
100000190	6445	9	15.064912			
100000190	6445	10	14.525519			
100000190	6446	1		SERVICE RD	SW	BROAD RIVER RD, I-20 EXIT 65 EB OFF RAMP & SERVICE RD
100000190	6446	2				
100000190	6446	3				
100000190	6446	4				

Node	Superlink	Run	Average Control Delay	Approach Street Name	Direction	Intersection
100000190	6446	5				
100000190	6446	6				
100000190	6446	7				
100000190	6446	8				
100000190	6446	9				
100000190	6446	10				
100000191	5399	1	0.05573	HARBOR DR	S	HARBOR DR & OAKWOOD DR
100000191	5399	2	0.232663			
100000191	5399	3	0.007825			
100000191	5399	4	0.148136			
100000191	5399	5	0.040834			
100000191	5399	6	0.075645			
100000191	5399	7	0.040615			
100000191	5399	8	0.067827			
100000191	5399	9	0.05177			
100000191	5399	10	0.072613			
100000191	5414	1	6.373331	OAKWOOD DR	NE	HARBOR DR & OAKWOOD DR
100000191	5414	2	6.731315			
100000191	5414	3	6.614375			
100000191	5414	4	6.595993			
100000191	5414	5	6.508679			
100000191	5414	6	6.140628			
100000191	5414	7	6.872897			
100000191	5414	8	6.327859			
100000191	5414	9	6.166731			
100000191	5414	10	6.354646			
100000191	5420	1	0	HARBOR DR	N	HARBOR DR & OAKWOOD DR
100000191	5420	2	0			
100000191	5420	3	0			
100000191	5420	4	0			
100000191	5420	5	0			
100000191	5420	6	0			
100000191	5420	7	0			
100000191	5420	8	0			
100000191	5420	9	0			
100000191	5420	10	0			
100000193	4350	1	22.256054	I-20 EXIT 68 EB OFF RAMP	E	BUCKNER RD, MONTICELLO RD & I-20 EXIT 68 EB OFF RAMP
100000193	4350	2	21.40935			
100000193	4350	3	21.06749			
100000193	4350	4	20.633533			
100000193	4350	5	24.430332			
100000193	4350	6	26.610217			
100000193	4350	7	23.798115			
100000193	4350	8	27.160858			
100000193	4350	9	23.496629			
100000193	4350	10	23.059843			
100000193	5154	1	18.028028	MONTICELLO RD	N	BUCKNER RD, MONTICELLO RD & I-20 EXIT 68 EB OFF RAMP
100000193	5154	2	20.873519			
100000193	5154	3	18.972011			
100000193	5154	4	20.767662			
100000193	5154	5	21.345904			
100000193	5154	6	20.468281			
100000193	5154	7	19.56373			
100000193	5154	8	17.073202			
100000193	5154	9	20.113485			
100000193	5154	10	21.531941			
100000193	5155	1	15.3242	MONTICELLO RD	SE	BUCKNER RD, MONTICELLO RD & I-20 EXIT 68 EB OFF RAMP
100000193	5155	2	15.253938			
100000193	5155	3	13.89289			
100000193	5155	4	13.987737			
100000193	5155	5	14.408824			
100000193	5155	6	14.243154			
100000193	5155	7	12.74325			
100000193	5155	8	13.19391			
100000193	5155	9	14.541405			
100000193	5155	10	14.902962			
100000193	5163	1	11.527586	BUCKNER RD	SW	BUCKNER RD, MONTICELLO RD & I-20 EXIT 68 EB OFF RAMP
100000193	5163	2	8.522987			
100000193	5163	3	9.7367			
100000193	5163	4	8.979714			
100000193	5163	5	10.904648			
100000193	5163	6	12.746745			
100000193	5163	7	13.124112			
100000193	5163	8	9.43293			
100000193	5163	9	12.557652			
100000193	5163	10	10.763524			
100000195	5150	1	3.431162	BROAD RIVER RD	SE	LONGCREEK DR & BROAD RIVER RD
100000195	5150	2	3.303913			
100000195	5150	3	3.219866			
100000195	5150	4	3.666774			
100000195	5150	5	3.294554			
100000195	5150	6	4.320123			
100000195	5150	7	3.621074			
100000195	5150	8	3.545507			
100000195	5150	9	3.425342			
100000195	5150	10	3.970703			
100000195	6049	1	4.520604	BROAD RIVER RD	NW	LONGCREEK DR & BROAD RIVER RD
100000195	6049	2	5.221694			
100000195	6049	3	5.274626			
100000195	6049	4	6.276616			
100000195	6049	5	5.756367			
100000195	6049	6	5.605695			
100000195	6049	7	6.395549			
100000195	6049	8	4.791454			
100000195	6049	9	5.969247			
100000195	6049	10	4.796669			
100000195	6052	1	16.166451	LONGCREEK DR	SW	LONGCREEK DR & BROAD RIVER RD
100000195	6052	2	17.385176			
100000195	6052	3	15.405509			
100000195	6052	4	16.159667			
100000195	6052	5	15.539597			
100000195	6052	6	14.525583			
100000195	6052	7	17.451416			
100000195	6052	8	14.803253			
100000195	6052	9	15.474883			
100000195	6052	10	15.463225			
100000196	5166	1	1.369556	MONTICELLO RD	SE	SERVICE RD, MONTICELLO RD & RAMP
100000196	5166	2	2.035314			
100000196	5166	3	1.974751			
100000196	5166	4	1.375054			
100000196	5166	5	1.781378			
100000196	5166	6	1.075301			

Node	Superlink	Run	Average Control Delay	Approach Street Name	Direction	Intersection
100000196	5166	7	1.292951			
100000196	5166	8	1.59482			
100000196	5166	9	1.938167			
100000196	5166	10	1.65514			
100000196	5169	1	9.172391	SERVICE RD	SW	SERVICE RD, MONTICELLO RD & RAMP
100000196	5169	2	15.350011			
100000196	5169	3	13.258059			
100000196	5169	4	12.940434			
100000196	5169	5	15.342147			
100000196	5169	6	15.521572			
100000196	5169	7	13.531417			
100000196	5169	8	12.599825			
100000196	5169	9	10.788868			
100000196	5169	10	11.4211			
100000196	5172	1	0.905672	MONTICELLO RD	NW	SERVICE RD, MONTICELLO RD & RAMP
100000196	5172	2	1.304574			
100000196	5172	3	1.450365			
100000196	5172	4	1.166441			
100000196	5172	5	1.543914			
100000196	5172	6	1.29165			
100000196	5172	7	1.335899			
100000196	5172	8	1.423407			
100000196	5172	9	1.610178			
100000196	5172	10	1.565789			
100000198	4354	1	0	RAMP	N	RAMP & I-20 EXIT 68 EB ON RAMP
100000198	4354	2	0			
100000198	4354	3	0			
100000198	4354	4	0			
100000198	4354	5	0			
100000198	4354	6	0			
100000198	4354	7	0			
100000198	4354	8	0			
100000198	4354	9	0			
100000198	4354	10	0			
100000198	5158	1		RAMP	NW	RAMP & I-20 EXIT 68 EB ON RAMP
100000198	5158	2				
100000198	5158	3				
100000198	5158	4				
100000198	5158	5				
100000198	5158	6				
100000198	5158	7				
100000198	5158	8				
100000198	5158	9				
100000198	5158	10				
100000200	5174	1	6.379624	MONTICELLO RD	NW	MONTICELLO RD, PEEPLES ST & BLUE RIDGE TER
100000200	5174	2	5.396276			
100000200	5174	3	6.392142			
100000200	5174	4	5.844041			
100000200	5174	5	6.060181			
100000200	5174	6	5.269916			
100000200	5174	7	5.98113			
100000200	5174	8	6.903349			
100000200	5174	9	6.444967			
100000200	5174	10	6.696249			
100000200	6041	1	4.858061	MONTICELLO RD	SE	MONTICELLO RD, PEEPLES ST & BLUE RIDGE TER
100000200	6041	2	4.444337			
100000200	6041	3	4.234233			
100000200	6041	4	4.473743			
100000200	6041	5	4.561465			
100000200	6041	6	3.8381			
100000200	6041	7	3.974126			
100000200	6041	8	4.924241			
100000200	6041	9	4.840633			
100000200	6041	10	4.422565			
100000200	6044	1	13.375243	PEEPLES ST	NE	MONTICELLO RD, PEEPLES ST & BLUE RIDGE TER
100000200	6044	2	12.825116			
100000200	6044	3	12.262287			
100000200	6044	4	11.063909			
100000200	6044	5	13.177714			
100000200	6044	6	14.36926			
100000200	6044	7	10.733941			
100000200	6044	8	13.208713			
100000200	6044	9	13.278482			
100000200	6044	10	12.673144			
100000200	6046	1	25.753603	BLUE RIDGE TER	S	MONTICELLO RD, PEEPLES ST & BLUE RIDGE TER
100000200	6046	2	26.463299			
100000200	6046	3	25.704378			
100000200	6046	4	25.085392			
100000200	6046	5	24.811509			
100000200	6046	6	25.358811			
100000200	6046	7	27.86775			
100000200	6046	8	24.279038			
100000200	6046	9	23.399857			
100000200	6046	10	24.382293			
100000201	5157	1	1.708338	BUCKNER RD	SW	BUCKNER RD & TO BUCKNER ROAD
100000201	5157	2	1.418226			
100000201	5157	3	1.824232			
100000201	5157	4	1.066435			
100000201	5157	5	2.099229			
100000201	5157	6	1.495714			
100000201	5157	7	2.011227			
100000201	5157	8	1.145922			
100000201	5157	9	1.557994			
100000201	5157	10	2.6656			
100000201	5161	1	0.082508	TO BUCKNER ROAD	N	BUCKNER RD & TO BUCKNER ROAD
100000201	5161	2	0.438567			
100000201	5161	3	0.660988			
100000201	5161	4	0.003328			
100000201	5161	5	0			
100000201	5161	6	0.006301			
100000201	5161	7	0.062958			
100000201	5161	8	0.00377			
100000201	5161	9	0.858905			
100000201	5161	10	0.01635			
100000201	5163	1	0.00065	BUCKNER RD	NE	BUCKNER RD & TO BUCKNER ROAD
100000201	5163	2	0.000087			
100000201	5163	3	0.000571			
100000201	5163	4	0.000499			
100000201	5163	5	0.001242			
100000201	5163	6	0.00016			
100000201	5163	7	0.000508			
100000201	5163	8	0.000458			

Node	Superlink	Run	Average Control Delay	Approach Street Name	Direction	Intersection
100000201	5163	9	0.000247			
100000201	5163	10	0.000267			
100000203	5169	1		SERVICE RD	E	SERVICE RD & MONTICELLO RD
100000203	5169	2				
100000203	5169	3				
100000203	5169	4				
100000203	5169	5				
100000203	5169	6				
100000203	5169	7				
100000203	5169	8				
100000203	5169	9				
100000203	5169	10				
100000203	5171	1		MONTICELLO RD	N	SERVICE RD & MONTICELLO RD
100000203	5171	2				
100000203	5171	3				
100000203	5171	4				
100000203	5171	5				
100000203	5171	6				
100000203	5171	7				
100000203	5171	8				
100000203	5171	9				
100000203	5171	10				
100000203	5173	1	0.183186	SERVICE RD	W	SERVICE RD & MONTICELLO RD
100000203	5173	2	0.397668			
100000203	5173	3	0.284121			
100000203	5173	4	0.263373			
100000203	5173	5	0.32566			
100000203	5173	6	0.275067			
100000203	5173	7	0.400254			
100000203	5173	8	0.352341			
100000203	5173	9	0.292038			
100000203	5173	10	0.408849			
100000250	6539	1	14.076454	BUSH RIVER RD	NW	E MEADOW CT/WOODLAND VILLAGE DR, BUSH RIVER RD & OUTLET POINTE BLVD
100000250	6539	2	18.215123			
100000250	6539	3	8.266531			
100000250	6539	4	19.358541			
100000250	6539	5	16.525688			
100000250	6539	6	27.564369			
100000250	6539	7	18.330303			
100000250	6539	8	20.827731			
100000250	6539	9	23.282608			
100000250	6539	10	15.576747			
100000250	6546	1	22.965385	OUTLET POINTE BLVD	NE	E MEADOW CT/WOODLAND VILLAGE DR, BUSH RIVER RD & OUTLET POINTE BLVD
100000250	6546	2	18.390427			
100000250	6546	3	23.1197			
100000250	6546	4	23.872617			
100000250	6546	5	24.834628			
100000250	6546	6	20.200319			
100000250	6546	7	20.164263			
100000250	6546	8	24.669945			
100000250	6546	9	25.274535			
100000250	6546	10	28.186083			
100000250	6547	1	30.726581	E MEADOW CT/WOODLAND VILLAGE DR	SW	E MEADOW CT/WOODLAND VILLAGE DR, BUSH RIVER RD & OUTLET POINTE BLVD
100000250	6547	2	23.7552			
100000250	6547	3	22.321771			
100000250	6547	4	25.917877			
100000250	6547	5	28.566507			
100000250	6547	6	29.572146			
100000250	6547	7	26.930145			
100000250	6547	8	21.070758			
100000250	6547	9	23.462485			
100000250	6547	10	24.443025			
100000250	6548	1	14.484741	BUSH RIVER RD	SE	E MEADOW CT/WOODLAND VILLAGE DR, BUSH RIVER RD & OUTLET POINTE BLVD
100000250	6548	2	15.428369			
100000250	6548	3	11.217901			
100000250	6548	4	15.53791			
100000250	6548	5	13.685749			
100000250	6548	6	19.705972			
100000250	6548	7	18.093724			
100000250	6548	8	21.744382			
100000250	6548	9	20.153678			
100000250	6548	10	13.44617			
100000252	5125	1	7.275038	BUSH RIVER RD	E	MORNINGHILL DR, BUSH RIVER RD & RAMP
100000252	5125	2	7.416001			
100000252	5125	3	6.818104			
100000252	5125	4	7.000502			
100000252	5125	5	6.990728			
100000252	5125	6	6.7827			
100000252	5125	7	7.105139			
100000252	5125	8	6.735238			
100000252	5125	9	6.720451			
100000252	5125	10	6.97362			
100000252	5487	1	58.426627	MORNINGHILL DR	S	MORNINGHILL DR, BUSH RIVER RD & RAMP
100000252	5487	2	60.902746			
100000252	5487	3	63.917452			
100000252	5487	4	66.55031			
100000252	5487	5	70.071671			
100000252	5487	6	47.893433			
100000252	5487	7	58.486228			
100000252	5487	8	54.805528			
100000252	5487	9	54.214157			
100000252	5487	10	46.064729			
100000252	5488	1	21.637209	RAMP	N	MORNINGHILL DR, BUSH RIVER RD & RAMP
100000252	5488	2	20.762776			
100000252	5488	3	21.550455			
100000252	5488	4	21.070566			
100000252	5488	5	20.518996			
100000252	5488	6	20.199929			
100000252	5488	7	21.390831			
100000252	5488	8	21.151624			
100000252	5488	9	22.656766			
100000252	5488	10	21.999904			
100000252	6505	1	22.316047	BUSH RIVER RD	W	MORNINGHILL DR, BUSH RIVER RD & RAMP
100000252	6505	2	21.929007			
100000252	6505	3	22.018995			
100000252	6505	4	20.236275			
100000252	6505	5	19.951537			
100000252	6505	6	22.708389			
100000252	6505	7	22.651527			
100000252	6505	8	23.168564			
100000252	6505	9	19.631211			
100000252	6505	10	21.905407			

Node	Superlink	Run	Average Control Delay	Approach Street Name	Direction	Intersection
100000255	5038	1	3.53175	BUSH RIVER RD	E	BUSH RIVER RD & INDEPENDENCE AVE
100000255	5038	2	3.359599			
100000255	5038	3	3.365136			
100000255	5038	4	3.796615			
100000255	5038	5	3.689355			
100000255	5038	6	3.677221			
100000255	5038	7	3.979176			
100000255	5038	8	3.54364			
100000255	5038	9	4.330112			
100000255	5038	10	4.113599			
100000255	5470	1	33.957618	INDEPENDENCE AVE	N	BUSH RIVER RD & INDEPENDENCE AVE
100000255	5470	2	29.607919			
100000255	5470	3	31.660634			
100000255	5470	4	29.586205			
100000255	5470	5	35.250797			
100000255	5470	6	29.594408			
100000255	5470	7	32.686789			
100000255	5470	8	37.480346			
100000255	5470	9	33.100186			
100000255	5470	10	31.4834			
100000255	5471	1	68.730178	BUSH RIVER RD	W	BUSH RIVER RD & INDEPENDENCE AVE
100000255	5471	2	93.279774			
100000255	5471	3	150.587433			
100000255	5471	4	69.212904			
100000255	5471	5	62.569124			
100000255	5471	6	120.867638			
100000255	5471	7	85.842728			
100000255	5471	8	65.011331			
100000255	5471	9	67.207197			
100000255	5471	10	76.870483			
100000256	5131	1	6.768711	BUSH RIVER RD	W	BUSH RIVER RD & ZIMALCREST DR
100000256	5131	2	6.882298			
100000256	5131	3	6.841476			
100000256	5131	4	7.27076			
100000256	5131	5	7.552449			
100000256	5131	6	7.952217			
100000256	5131	7	7.457946			
100000256	5131	8	6.954038			
100000256	5131	9	8.603616			
100000256	5131	10	8.409564			
100000256	5465	1	9.898288	BUSH RIVER RD	E	BUSH RIVER RD & ZIMALCREST DR
100000256	5465	2	12.097797			
100000256	5465	3	8.958316			
100000256	5465	4	9.759942			
100000256	5465	5	9.96836			
100000256	5465	6	11.209933			
100000256	5465	7	9.153779			
100000256	5465	8	9.552652			
100000256	5465	9	9.101983			
100000256	5465	10	10.005791			
100000256	5484	1	42.522092	ZIMALCREST DR	S	BUSH RIVER RD & ZIMALCREST DR
100000256	5484	2	48.674088			
100000256	5484	3	32.142575			
100000256	5484	4	46.5832			
100000256	5484	5	42.204543			
100000256	5484	6	29.852926			
100000256	5484	7	36.185824			
100000256	5484	8	42.895017			
100000256	5484	9	36.247607			
100000256	5484	10	29.966661			
100000256	5485	1	7.647691	ZIMALCREST DR	N	BUSH RIVER RD & ZIMALCREST DR
100000256	5485	2	8.121399			
100000256	5485	3	7.955613			
100000256	5485	4	8.49485			
100000256	5485	5	8.860086			
100000256	5485	6	8.929142			
100000256	5485	7	8.541223			
100000256	5485	8	11.336408			
100000256	5485	9	10.287793			
100000256	5485	10	9.439731			
100000259	5465	1	0	BUSH RIVER RD	W	NOTTINGWOOD DR & BUSH RIVER RD
100000259	5465	2	0			
100000259	5465	3	0			
100000259	5465	4	0			
100000259	5465	5	0			
100000259	5465	6	0			
100000259	5465	7	0			
100000259	5465	8	0			
100000259	5465	9	0			
100000259	5465	10	0			
100000259	5471	1	0	BUSH RIVER RD	E	NOTTINGWOOD DR & BUSH RIVER RD
100000259	5471	2	0			
100000259	5471	3	0			
100000259	5471	4	0			
100000259	5471	5	0			
100000259	5471	6	0			
100000259	5471	7	0			
100000259	5471	8	0			
100000259	5471	9	0			
100000259	5471	10	0			
100000259	5472	1		NOTTINGWOOD DR	S	NOTTINGWOOD DR & BUSH RIVER RD
100000259	5472	2				
100000259	5472	3				
100000259	5472	4				
100000259	5472	5				
100000259	5472	6				
100000259	5472	7				
100000259	5472	8				
100000259	5472	9				
100000259	5472	10				
100000262	5502	1	0.375501	BUSH RIVER RD	E	DUTCH SQUARE ENTRANCE, BUSH RIVER RD & COLONIAL LIFE BLVD W
100000262	5502	2	0.331991			
100000262	5502	3	0.527688			
100000262	5502	4	0.467661			
100000262	5502	5	0.448703			
100000262	5502	6	0.354243			
100000262	5502	7	0.681328			
100000262	5502	8	0.498364			
100000262	5502	9	0.773496			
100000262	5502	10	0.693563			
100000262	5506	1	30.130847	COLONIAL LIFE BLVD W	N	DUTCH SQUARE ENTRANCE, BUSH RIVER RD & COLONIAL LIFE BLVD W
100000262	5506	2	29.20165			

Node	Superlink	Run	Average Control Delay	Approach Street Name	Direction	Intersection
100000262	5506	3	29.797857			
100000262	5506	4	30.425965			
100000262	5506	5	33.975977			
100000262	5506	6	30.699784			
100000262	5506	7	29.681044			
100000262	5506	8	25.462343			
100000262	5506	9	29.558533			
100000262	5506	10	27.729691			
100000262	5509	1	61.999419	DUTCH SQUARE ENTRANCE	S	DUTCH SQUARE ENTRANCE, BUSH RIVER RD & COLONIAL LIFE BLVD W
100000262	5509	2	51.289812			
100000262	5509	3	54.016351			
100000262	5509	4	59.317507			
100000262	5509	5	64.189568			
100000262	5509	6	56.131378			
100000262	5509	7	63.551812			
100000262	5509	8	59.980727			
100000262	5509	9	62.965331			
100000262	5509	10	53.581231			
100000262	5511	1	14.828358	BUSH RIVER RD	W	DUTCH SQUARE ENTRANCE, BUSH RIVER RD & COLONIAL LIFE BLVD W
100000262	5511	2	17.288495			
100000262	5511	3	14.353614			
100000262	5511	4	14.01638			
100000262	5511	5	13.801942			
100000262	5511	6	15.969723			
100000262	5511	7	17.173015			
100000262	5511	8	15.805037			
100000262	5511	9	19.700724			
100000262	5511	10	13.690983			
100000263	5516	1	0.198417	COLONIAL LIFE BLVD W	N	COLONIAL LIFE BLVD W
100000263	5516	2	0.109842			
100000263	5516	3	0.208385			
100000263	5516	4	0.260727			
100000263	5516	5	0.185656			
100000263	5516	6	0.184355			
100000263	5516	7	0.219017			
100000263	5516	8	0.191453			
100000263	5516	9	0.23159			
100000263	5516	10	0.160702			
100000263	5520	1	9.547264	COLONIAL LIFE BLVD W	W	COLONIAL LIFE BLVD W
100000263	5520	2	8.308617			
100000263	5520	3	8.552273			
100000263	5520	4	8.426694			
100000263	5520	5	9.76616			
100000263	5520	6	11.011789			
100000263	5520	7	7.867745			
100000263	5520	8	10.85428			
100000263	5520	9	9.64186			
100000263	5520	10	9.753528			
100000263	6495	1	0.527442	COLONIAL LIFE BLVD W	S	COLONIAL LIFE BLVD W
100000263	6495	2	0.511728			
100000263	6495	3	0.53815			
100000263	6495	4	0.697493			
100000263	6495	5	0.43751			
100000263	6495	6	0.514361			
100000263	6495	7	0.485418			
100000263	6495	8	0.784065			
100000263	6495	9	0.487952			
100000263	6495	10	0.526035			
100000265	5139	1	13.222741	GREYSTONE BLVD	N	GREYSTONE BLVD & STONERIDGE DR
100000265	5139	2	15.638556			
100000265	5139	3	15.681393			
100000265	5139	4	14.555511			
100000265	5139	5	13.211485			
100000265	5139	6	15.258837			
100000265	5139	7	17.961757			
100000265	5139	8	15.813139			
100000265	5139	9	15.437358			
100000265	5139	10	13.662972			
100000265	5537	1	21.87067	STONERIDGE DR	W	GREYSTONE BLVD & STONERIDGE DR
100000265	5537	2	27.356981			
100000265	5537	3	27.607706			
100000265	5537	4	23.586167			
100000265	5537	5	22.379736			
100000265	5537	6	20.695053			
100000265	5537	7	21.900695			
100000265	5537	8	21.795972			
100000265	5537	9	22.884736			
100000265	5537	10	24.899567			
100000265	5556	1	12.637233	STONERIDGE DR	E	GREYSTONE BLVD & STONERIDGE DR
100000265	5556	2	11.8752			
100000265	5556	3	11.841879			
100000265	5556	4	12.538115			
100000265	5556	5	11.794688			
100000265	5556	6	12.772862			
100000265	5556	7	13.208545			
100000265	5556	8	12.428447			
100000265	5556	9	11.787016			
100000265	5556	10	13.250365			
100000265	6328	1	18.759846	GREYSTONE BLVD	S	GREYSTONE BLVD & STONERIDGE DR
100000265	6328	2	18.612607			
100000265	6328	3	17.548806			
100000265	6328	4	16.449166			
100000265	6328	5	17.888624			
100000265	6328	6	18.771565			
100000265	6328	7	18.996343			
100000265	6328	8	17.819754			
100000265	6328	9	17.347964			
100000265	6328	10	16.972153			
100000266	5545	1	58.212619	GREYSTONE BLVD	N	GREYSTONE BLVD & BROAD RIVER RD
100000266	5545	2	63.387314			
100000266	5545	3	56.603726			
100000266	5545	4	55.89241			
100000266	5545	5	60.942453			
100000266	5545	6	60.699179			
100000266	5545	7	58.514763			
100000266	5545	8	57.937149			
100000266	5545	9	54.365979			
100000266	5545	10	60.313938			
100000266	6325	1	4.774964	BROAD RIVER RD	W	GREYSTONE BLVD & BROAD RIVER RD
100000266	6325	2	4.8721			
100000266	6325	3	4.461473			
100000266	6325	4	4.382299			

Node	Superlink	Run	Average Control Delay	Approach Street Name	Direction	Intersection
100000266	6325	5	5.657933			
100000266	6325	6	5.74663			
100000266	6325	7	5.520983			
100000266	6325	8	4.919937			
100000266	6325	9	4.092641			
100000266	6325	10	5.442967			
100000266	6327	1	6.497072	BROAD RIVER RD	E	GREYSTONE BLVD & BROAD RIVER RD
100000266	6327	2	7.598829			
100000266	6327	3	7.284528			
100000266	6327	4	6.225618			
100000266	6327	5	7.552106			
100000266	6327	6	6.821094			
100000266	6327	7	7.009617			
100000266	6327	8	7.237833			
100000266	6327	9	6.73227			
100000266	6327	10	7.327579			
100000268	5565	1	31.4957	HUGER ST	N	HUGER ST & LAUREL ST
100000268	5565	2	33.118311			
100000268	5565	3	33.326985			
100000268	5565	4	33.028657			
100000268	5565	5	34.08627			
100000268	5565	6	32.764008			
100000268	5565	7	31.723812			
100000268	5565	8	32.397535			
100000268	5565	9	31.720651			
100000268	5565	10	31.62394			
100000268	5570	1	29.537968	LAUREL ST	E	HUGER ST & LAUREL ST
100000268	5570	2	30.495204			
100000268	5570	3	30.455322			
100000268	5570	4	29.978184			
100000268	5570	5	30.001913			
100000268	5570	6	30.048586			
100000268	5570	7	31.657348			
100000268	5570	8	29.848895			
100000268	5570	9	29.595698			
100000268	5570	10	30.103447			
100000268	5571	1	22.396083	HUGER ST	S	HUGER ST & LAUREL ST
100000268	5571	2	22.742829			
100000268	5571	3	24.543435			
100000268	5571	4	24.178943			
100000268	5571	5	21.89541			
100000268	5571	6	22.913783			
100000268	5571	7	22.081107			
100000268	5571	8	22.569458			
100000268	5571	9	22.749154			
100000268	5571	10	22.752699			
100000268	5581	1	48.330619	LAUREL ST	W	HUGER ST & LAUREL ST
100000268	5581	2	50.051139			
100000268	5581	3	49.699977			
100000268	5581	4	48.538536			
100000268	5581	5	48.021869			
100000268	5581	6	48.095815			
100000268	5581	7	47.166331			
100000268	5581	8	50.011748			
100000268	5581	9	49.223581			
100000268	5581	10	49.915964			
100000339	6083	1	19.049925	BROAD RIVER RD	NW	BROAD RIVER RD & ST ANDREWS RD
100000339	6083	2	14.713915			
100000339	6083	3	17.559364			
100000339	6083	4	20.201253			
100000339	6083	5	18.780892			
100000339	6083	6	17.241722			
100000339	6083	7	18.480545			
100000339	6083	8	15.351561			
100000339	6083	9	20.47823			
100000339	6083	10	17.675598			
100000339	6084	1	21.671376	BROAD RIVER RD	SE	BROAD RIVER RD & ST ANDREWS RD
100000339	6084	2	23.051809			
100000339	6084	3	26.118757			
100000339	6084	4	23.758055			
100000339	6084	5	25.407368			
100000339	6084	6	28.314565			
100000339	6084	7	26.638735			
100000339	6084	8	24.906641			
100000339	6084	9	23.079888			
100000339	6084	10	22.872075			
100000339	6085	1	67.024914	ST ANDREWS RD	SW	BROAD RIVER RD & ST ANDREWS RD
100000339	6085	2	57.36834			
100000339	6085	3	60.214942			
100000339	6085	4	66.751283			
100000339	6085	5	62.574012			
100000339	6085	6	66.817738			
100000339	6085	7	67.877161			
100000339	6085	8	57.524543			
100000339	6085	9	54.886272			
100000339	6085	10	65.140565			
100000339	6086	1	38.376009	ST ANDREWS RD	E	BROAD RIVER RD & ST ANDREWS RD
100000339	6086	2	35.677784			
100000339	6086	3	39.843545			
100000339	6086	4	36.610021			
100000339	6086	5	36.723126			
100000339	6086	6	39.587287			
100000339	6086	7	35.849824			
100000339	6086	8	39.067383			
100000339	6086	9	45.536733			
100000339	6086	10	36.43627			
100000343	6059	1	0.011273	BROAD RIVER RD	NW	NUNAMAKER DR & BROAD RIVER RD
100000343	6059	2	0.003108			
100000343	6059	3	0.006805			
100000343	6059	4	0.036381			
100000343	6059	5	0.025137			
100000343	6059	6	0.001037			
100000343	6059	7	0.003093			
100000343	6059	8	0.000603			
100000343	6059	9	0.002631			
100000343	6059	10	0.002805			
100000343	6063	1		NUNAMAKER DR	SW	NUNAMAKER DR & BROAD RIVER RD
100000343	6063	2				
100000343	6063	3				
100000343	6063	4				
100000343	6063	5				
100000343	6063	6				

Node	Superlink	Run	Average Control Delay	Approach Street Name	Direction	Intersection
100000343	6063	7				
100000343	6063	8				
100000343	6063	9				
100000343	6063	10				
100000343	6065	1	0.020427	BROAD RIVER RD	SE	NUNAMAKER DR & BROAD RIVER RD
100000343	6065	2	0.0151			
100000343	6065	3	0.007179			
100000343	6065	4	0.01122			
100000343	6065	5	0.005365			
100000343	6065	6	0.001916			
100000343	6065	7	0.015215			
100000343	6065	8	0.005449			
100000343	6065	9	0.005206			
100000343	6065	10	0.007948			
100000344	6065	1	2.211898	BROAD RIVER RD	NW	YOUNG DR, BROAD RIVER RD & SEMINOLE RD
100000344	6065	2	2.252806			
100000344	6065	3	2.210078			
100000344	6065	4	3.240427			
100000344	6065	5	2.813235			
100000344	6065	6	2.611915			
100000344	6065	7	3.225485			
100000344	6065	8	2.68475			
100000344	6065	9	2.722332			
100000344	6065	10	2.530672			
100000344	6066	1	13.807297	BROAD RIVER RD	SE	YOUNG DR, BROAD RIVER RD & SEMINOLE RD
100000344	6066	2	16.116108			
100000344	6066	3	15.790653			
100000344	6066	4	15.573744			
100000344	6066	5	15.742156			
100000344	6066	6	16.518927			
100000344	6066	7	19.519538			
100000344	6066	8	18.811328			
100000344	6066	9	14.288244			
100000344	6066	10	14.94907			
100000344	6067	1	51.32163	YOUNG DR	SW	YOUNG DR, BROAD RIVER RD & SEMINOLE RD
100000344	6067	2	49.028517			
100000344	6067	3	48.303018			
100000344	6067	4	56.465512			
100000344	6067	5	50.338551			
100000344	6067	6	53.166537			
100000344	6067	7	66.060908			
100000344	6067	8	50.302937			
100000344	6067	9	50.871527			
100000344	6067	10	60.152592			
100000344	6068	1	25.246262	SEMINOLE RD	NE	YOUNG DR, BROAD RIVER RD & SEMINOLE RD
100000344	6068	2	25.927196			
100000344	6068	3	31.759468			
100000344	6068	4	30.919251			
100000344	6068	5	29.093522			
100000344	6068	6	28.607961			
100000344	6068	7	23.112072			
100000344	6068	8	33.646467			
100000344	6068	9	19.609515			
100000344	6068	10	25.500077			
100000348	5116	1	6.300665	ST ANDREWS RD	NW	ST ANDREWS RD & JAMIL RD
100000348	5116	2	5.296664			
100000348	5116	3	4.873943			
100000348	5116	4	5.217941			
100000348	5116	5	4.99649			
100000348	5116	6	5.314861			
100000348	5116	7	4.47396			
100000348	5116	8	5.470222			
100000348	5116	9	4.797861			
100000348	5116	10	5.782387			
100000348	6114	1	7.240919	ST ANDREWS RD	E	ST ANDREWS RD & JAMIL RD
100000348	6114	2	8.795765			
100000348	6114	3	5.247028			
100000348	6114	4	5.530459			
100000348	6114	5	6.700948			
100000348	6114	6	7.626815			
100000348	6114	7	7.170251			
100000348	6114	8	7.166957			
100000348	6114	9	5.025324			
100000348	6114	10	6.375402			
100000348	6119	1	65.996241	JAMIL RD	S	ST ANDREWS RD & JAMIL RD
100000348	6119	2	68.672364			
100000348	6119	3	71.341009			
100000348	6119	4	67.750047			
100000348	6119	5	71.947829			
100000348	6119	6	66.594517			
100000348	6119	7	64.925735			
100000348	6119	8	66.311633			
100000348	6119	9	68.066203			
100000348	6119	10	65.27735			
100000349	6066	1	3.689311	BROAD RIVER RD	NW	ST ANDREWS PKY & BROAD RIVER RD
100000349	6066	2	2.708221			
100000349	6066	3	2.086735			
100000349	6066	4	2.138718			
100000349	6066	5	2.457306			
100000349	6066	6	3.706132			
100000349	6066	7	3.242016			
100000349	6066	8	2.129857			
100000349	6066	9	2.219346			
100000349	6066	10	2.593362			
100000349	6078	1	43.047983	ST ANDREWS PKY	SW	ST ANDREWS PKY & BROAD RIVER RD
100000349	6078	2	52.730333			
100000349	6078	3	57.298625			
100000349	6078	4	49.912694			
100000349	6078	5	48.512508			
100000349	6078	6	51.282309			
100000349	6078	7	48.247198			
100000349	6078	8	55.525662			
100000349	6078	9	56.443984			
100000349	6078	10	53.050856			
100000349	6079	1		BROAD RIVER RD	NE	ST ANDREWS PKY & BROAD RIVER RD
100000349	6079	2				
100000349	6079	3				
100000349	6079	4				
100000349	6079	5				
100000349	6079	6				
100000349	6079	7				
100000349	6079	8				

Node	Superlink	Run	Average Control Delay	Approach Street Name	Direction	Intersection
100000349	6079	9				
100000349	6079	10				
100000349	6083	1	3.249971	BROAD RIVER RD	SE	ST ANDREWS PKY & BROAD RIVER RD
100000349	6083	2	4.445515			
100000349	6083	3	3.622733			
100000349	6083	4	2.198329			
100000349	6083	5	3.782522			
100000349	6083	6	3.493529			
100000349	6083	7	3.476969			
100000349	6083	8	3.590289			
100000349	6083	9	3.079046			
100000349	6083	10	3.463053			
100000353	5104	1	24.735192	PINEY GROVE RD	W	BOWER PKY, PINEY GROVE RD & JAMIL RD
100000353	5104	2	22.144058			
100000353	5104	3	26.378829			
100000353	5104	4	25.600155			
100000353	5104	5	25.943678			
100000353	5104	6	21.269442			
100000353	5104	7	23.320679			
100000353	5104	8	20.224991			
100000353	5104	9	27.368623			
100000353	5104	10	25.39386			
100000353	6125	1	26.164118	BOWER PKY	SE	BOWER PKY, PINEY GROVE RD & JAMIL RD
100000353	6125	2	28.82459			
100000353	6125	3	29.180145			
100000353	6125	4	28.352094			
100000353	6125	5	28.110102			
100000353	6125	6	25.644257			
100000353	6125	7	25.595071			
100000353	6125	8	29.053671			
100000353	6125	9	25.462962			
100000353	6125	10	23.786581			
100000353	6126	1	23.160638	PINEY GROVE RD	E	BOWER PKY, PINEY GROVE RD & JAMIL RD
100000353	6126	2	20.542401			
100000353	6126	3	21.146938			
100000353	6126	4	24.234483			
100000353	6126	5	22.471457			
100000353	6126	6	19.271163			
100000353	6126	7	20.930356			
100000353	6126	8	21.151101			
100000353	6126	9	23.224877			
100000353	6126	10	22.12422			
100000353	6127	1	49.210797	JAMIL RD	NW	BOWER PKY, PINEY GROVE RD & JAMIL RD
100000353	6127	2	35.476484			
100000353	6127	3	42.791598			
100000353	6127	4	43.642601			
100000353	6127	5	49.776653			
100000353	6127	6	33.060019			
100000353	6127	7	39.93723			
100000353	6127	8	44.273966			
100000353	6127	9	37.986312			
100000353	6127	10	47.488733			
100000354	6095	1	15.854454	ST ANDREWS RD	SW	ST ANDREWS RD, KAY ST & CHARTWELL RD
100000354	6095	2	11.556523			
100000354	6095	3	13.508657			
100000354	6095	4	16.098161			
100000354	6095	5	12.414101			
100000354	6095	6	14.224604			
100000354	6095	7	13.436862			
100000354	6095	8	13.598698			
100000354	6095	9	13.395713			
100000354	6095	10	12.84723			
100000354	6096	1	8.398002	ST ANDREWS RD	NE	ST ANDREWS RD, KAY ST & CHARTWELL RD
100000354	6096	2	6.310259			
100000354	6096	3	7.484709			
100000354	6096	4	8.594886			
100000354	6096	5	6.559843			
100000354	6096	6	6.243286			
100000354	6096	7	7.748129			
100000354	6096	8	6.959372			
100000354	6096	9	6.534849			
100000354	6096	10	8.015212			
100000354	6098	1	121.864529	CHARTWELL RD	NW	ST ANDREWS RD, KAY ST & CHARTWELL RD
100000354	6098	2	122.407518			
100000354	6098	3	84.391559			
100000354	6098	4	173.852618			
100000354	6098	5	79.865363			
100000354	6098	6	80.01547			
100000354	6098	7	88.037596			
100000354	6098	8	121.083858			
100000354	6098	9	59.966936			
100000354	6098	10	82.574933			
100000354	6099	1	25.432902	KAY ST	SE	ST ANDREWS RD, KAY ST & CHARTWELL RD
100000354	6099	2	25.030309			
100000354	6099	3	28.473755			
100000354	6099	4	47.906812			
100000354	6099	5	28.196914			
100000354	6099	6	25.416597			
100000354	6099	7	23.828767			
100000354	6099	8	23.68804			
100000354	6099	9	23.050658			
100000354	6099	10	28.906058			
100000356	6086	1	0.137876	ST ANDREWS RD	SW	LAWRENCE ST & ST ANDREWS RD
100000356	6086	2	0.149043			
100000356	6086	3	0.135508			
100000356	6086	4	0.15194			
100000356	6086	5	0.167446			
100000356	6086	6	0.159392			
100000356	6086	7	0.164409			
100000356	6086	8	0.140113			
100000356	6086	9	0.117377			
100000356	6086	10	0.102345			
100000356	6092	1	8.231196	LAWRENCE ST	SE	LAWRENCE ST & ST ANDREWS RD
100000356	6092	2	9.043185			
100000356	6092	3	9.875449			
100000356	6092	4	9.798087			
100000356	6092	5	7.409687			
100000356	6092	6	8.471139			
100000356	6092	7	8.372579			
100000356	6092	8	8.964061			
100000356	6092	9	9.166158			
100000356	6092	10	10.176478			

Node	Superlink	Run	Average Control Delay	Approach Street Name	Direction	Intersection
100000356	6094	1	0.696143	ST ANDREWS RD	NE	LAWRENCE ST & ST ANDREWS RD
100000356	6094	2	0.744316			
100000356	6094	3	0.722323			
100000356	6094	4	0.693203			
100000356	6094	5	0.50231			
100000356	6094	6	0.850922			
100000356	6094	7	0.66002			
100000356	6094	8	0.929256			
100000356	6094	9	0.54678			
100000356	6094	10	0.600892			
100000357	6119	1	0.808857	JAMIL RD	NW	JAMIL RD & PAISLEY LN
100000357	6119	2	0.996149			
100000357	6119	3	0.947905			
100000357	6119	4	0.83869			
100000357	6119	5	0.756404			
100000357	6119	6	0.67813			
100000357	6119	7	1.113049			
100000357	6119	8	0.95568			
100000357	6119	9	0.743304			
100000357	6119	10	0.864856			
100000357	6120	1	11.968952	PAISLEY LN	NE	JAMIL RD & PAISLEY LN
100000357	6120	2	10.41085			
100000357	6120	3	13.566336			
100000357	6120	4	12.230411			
100000357	6120	5	11.787482			
100000357	6120	6	14.075473			
100000357	6120	7	11.384654			
100000357	6120	8	10.588802			
100000357	6120	9	11.627002			
100000357	6120	10	13.51685			
100000357	6121	1	1.471576	JAMIL RD	SE	JAMIL RD & PAISLEY LN
100000357	6121	2	0.992849			
100000357	6121	3	0.63753			
100000357	6121	4	0.821354			
100000357	6121	5	1.055835			
100000357	6121	6	0.971557			
100000357	6121	7	1.603569			
100000357	6121	8	0.810536			
100000357	6121	9	1.36214			
100000357	6121	10	0.770708			
100000358	5117	1	9.856361	ST ANDREWS RD	NE	ST ANDREWS RD, FERNANDINA RD & BURNING TREE RD
100000358	5117	2	9.984019			
100000358	5117	3	10.848208			
100000358	5117	4	9.990055			
100000358	5117	5	9.180519			
100000358	5117	6	9.571302			
100000358	5117	7	9.509434			
100000358	5117	8	9.635226			
100000358	5117	9	10.571444			
100000358	5117	10	10.711536			
100000358	6100	1	12.242019	ST ANDREWS RD	SW	ST ANDREWS RD, FERNANDINA RD & BURNING TREE RD
100000358	6100	2	11.378539			
100000358	6100	3	13.579093			
100000358	6100	4	12.856397			
100000358	6100	5	12.023192			
100000358	6100	6	11.340524			
100000358	6100	7	11.764052			
100000358	6100	8	12.227238			
100000358	6100	9	12.060514			
100000358	6100	10	11.4058			
100000358	6101	1	29.542819	BURNING TREE RD	NW	ST ANDREWS RD, FERNANDINA RD & BURNING TREE RD
100000358	6101	2	28.299276			
100000358	6101	3	25.764319			
100000358	6101	4	33.208715			
100000358	6101	5	31.541514			
100000358	6101	6	29.129322			
100000358	6101	7	27.000907			
100000358	6101	8	31.943702			
100000358	6101	9	27.893972			
100000358	6101	10	33.009618			
100000358	6102	1	24.588191	FERNANDINA RD	SE	ST ANDREWS RD, FERNANDINA RD & BURNING TREE RD
100000358	6102	2	21.549179			
100000358	6102	3	21.813075			
100000358	6102	4	22.874546			
100000358	6102	5	21.688666			
100000358	6102	6	22.789908			
100000358	6102	7	21.238273			
100000358	6102	8	22.111494			
100000358	6102	9	21.515799			
100000358	6102	10	21.769742			
100000360	3294	1	11.771776	EXIT 106 WB OFF RAMP	NE	EXIT 106 WB OFF RAMP & BURNING TREE RD
100000360	3294	2	11.353456			
100000360	3294	3	12.230579			
100000360	3294	4	10.661842			
100000360	3294	5	10.640358			
100000360	3294	6	13.355582			
100000360	3294	7	10.663067			
100000360	3294	8	10.973642			
100000360	3294	9	10.609475			
100000360	3294	10	10.214617			
100000360	6101	1	0.078347	BURNING TREE RD	S	EXIT 106 WB OFF RAMP & BURNING TREE RD
100000360	6101	2	0.048735			
100000360	6101	3	0.089855			
100000360	6101	4	0.027194			
100000360	6101	5	0.049328			
100000360	6101	6	0.043103			
100000360	6101	7	0.050601			
100000360	6101	8	0.061361			
100000360	6101	9	0.060705			
100000360	6101	10	0.037286			
100000360	6105	1	0.03881	BURNING TREE RD	N	EXIT 106 WB OFF RAMP & BURNING TREE RD
100000360	6105	2	0.017907			
100000360	6105	3	0.020475			
100000360	6105	4	0.022219			
100000360	6105	5	0.034234			
100000360	6105	6	0.020829			
100000360	6105	7	0.022286			
100000360	6105	8	0.02731			
100000360	6105	9	0.022353			
100000360	6105	10	0.027239			
100000362	6134	1	10.522659	JAMIL RD	NW	HARBISON BLVD & JAMIL RD
100000362	6134	2	19.216967			

Node	Superlink	Run	Average Control Delay	Approach Street Name	Direction	Intersection
100000362	6134	3	11.514222			
100000362	6134	4	11.585127			
100000362	6134	5	10.518956			
100000362	6134	6	8.620709			
100000362	6134	7	14.02197			
100000362	6134	8	12.17664			
100000362	6134	9	7.77461			
100000362	6134	10	10.723394			
100000362	6137	1	0.847889	HARBISON BLVD	NE	HARBISON BLVD & JAMIL RD
100000362	6137	2	0.919796			
100000362	6137	3	0.430715			
100000362	6137	4	0.830909			
100000362	6137	5	0.648699			
100000362	6137	6	0.55287			
100000362	6137	7	0.873865			
100000362	6137	8	0.592409			
100000362	6137	9	0.691362			
100000362	6137	10	0.859429			
100000362	6473	1	0.000877	HARBISON BLVD	SW	HARBISON BLVD & JAMIL RD
100000362	6473	2	0.00272			
100000362	6473	3	0.002452			
100000362	6473	4	0.002753			
100000362	6473	5	0.001882			
100000362	6473	6	0.00265			
100000362	6473	7	0.003022			
100000362	6473	8	0.001963			
100000362	6473	9	0.015804			
100000362	6473	10	0.001959			
100000363	6125	1	0.301419	BOWER PKY	NW	BOWER PKY & JAMIL RD
100000363	6125	2	0.319532			
100000363	6125	3	0.43936			
100000363	6125	4	0.460994			
100000363	6125	5	0.346036			
100000363	6125	6	0.263616			
100000363	6125	7	0.161795			
100000363	6125	8	0.230817			
100000363	6125	9	0.232842			
100000363	6125	10	0.114146			
100000363	6134	1	11.043962	JAMIL RD	SW	BOWER PKY & JAMIL RD
100000363	6134	2	11.491612			
100000363	6134	3	10.346736			
100000363	6134	4	10.283738			
100000363	6134	5	10.185982			
100000363	6134	6	10.971718			
100000363	6134	7	10.878151			
100000363	6134	8	9.606352			
100000363	6134	9	9.779898			
100000363	6134	10	10.555			
100000363	6160	1	0.515503	BOWER PKY	SE	BOWER PKY & JAMIL RD
100000363	6160	2	0.456325			
100000363	6160	3	0.52606			
100000363	6160	4	0.481809			
100000363	6160	5	0.500836			
100000363	6160	6	0.50258			
100000363	6160	7	0.380803			
100000363	6160	8	0.313673			
100000363	6160	9	0.474308			
100000363	6160	10	0.416184			
100000364	6145	1	1.815159	HARBISON BLVD	SW	HARBISON BLVD & COLUMBIANA DR
100000364	6145	2	2.328862			
100000364	6145	3	2.5601			
100000364	6145	4	2.763028			
100000364	6145	5	2.394682			
100000364	6145	6	2.329234			
100000364	6145	7	2.266334			
100000364	6145	8	2.693228			
100000364	6145	9	2.176646			
100000364	6145	10	2.351868			
100000364	6176	1	2.517313	HARBISON BLVD	NE	HARBISON BLVD & COLUMBIANA DR
100000364	6176	2	2.628444			
100000364	6176	3	3.160182			
100000364	6176	4	2.762445			
100000364	6176	5	2.749689			
100000364	6176	6	2.874268			
100000364	6176	7	3.571657			
100000364	6176	8	3.24982			
100000364	6176	9	2.744256			
100000364	6176	10	3.163764			
100000364	6177	1		COLUMBIANA DR	NW	HARBISON BLVD & COLUMBIANA DR
100000364	6177	2				
100000364	6177	3				
100000364	6177	4				
100000364	6177	5				
100000364	6177	6				
100000364	6177	7				
100000364	6177	8				
100000364	6177	9				
100000364	6177	10				
100000364	6196	1	47.901805	COLUMBIANA DR	SE	HARBISON BLVD & COLUMBIANA DR
100000364	6196	2	46.027609			
100000364	6196	3	47.856956			
100000364	6196	4	47.647959			
100000364	6196	5	44.556277			
100000364	6196	6	49.109841			
100000364	6196	7	49.652868			
100000364	6196	8	48.343832			
100000364	6196	9	48.37565			
100000364	6196	10	48.263223			
100000365	6137	1	5.543229	HARBISON BLVD	SW	COLUMBIANA CIR, HARBISON BLVD & PARK TERRACE DR
100000365	6137	2	5.669849			
100000365	6137	3	5.500191			
100000365	6137	4	5.47062			
100000365	6137	5	5.781438			
100000365	6137	6	6.50284			
100000365	6137	7	7.34985			
100000365	6137	8	7.325713			
100000365	6137	9	6.92057			
100000365	6137	10	6.894558			
100000365	6140	1	17.395807	COLUMBIANA CIR	SE	COLUMBIANA CIR, HARBISON BLVD & PARK TERRACE DR
100000365	6140	2	19.655409			
100000365	6140	3	11.903281			
100000365	6140	4	21.156147			

Node	Superlink	Run	Average Control Delay	Approach Street Name	Direction	Intersection
100000365	6140	5	19.689397			
100000365	6140	6	21.402871			
100000365	6140	7	17.397971			
100000365	6140	8	15.593433			
100000365	6140	9	17.443293			
100000365	6140	10	15.082014			
100000365	6145	1	8.849181	HARBISON BLVD	NE	COLUMBIANA CIR, HARBISON BLVD & PARK TERRACE DR
100000365	6145	2	9.003203			
100000365	6145	3	8.411214			
100000365	6145	4	10.294088			
100000365	6145	5	10.301877			
100000365	6145	6	9.982251			
100000365	6145	7	11.875079			
100000365	6145	8	9.98206			
100000365	6145	9	10.15039			
100000365	6145	10	10.372966			
100000365	6151	1	25.537491	PARK TERRACE DR	NW	COLUMBIANA CIR, HARBISON BLVD & PARK TERRACE DR
100000365	6151	2	27.8872			
100000365	6151	3	22.908835			
100000365	6151	4	26.918986			
100000365	6151	5	24.876793			
100000365	6151	6	29.623739			
100000365	6151	7	22.798973			
100000365	6151	8	28.433851			
100000365	6151	9	29.042951			
100000365	6151	10	30.284836			
100000374	6151	1	32.701975	PARK TERRACE DR	S	BOWER PKY, PARK TERRACE DR & 6161 (S)
100000374	6151	2	31.473351			
100000374	6151	3	36.407528			
100000374	6151	4	36.471245			
100000374	6151	5	35.850878			
100000374	6151	6	32.498619			
100000374	6151	7	34.983172			
100000374	6151	8	35.289999			
100000374	6151	9	41.787782			
100000374	6151	10	30.126371			
100000374	6160	1	8.872327	BOWER PKY	W	BOWER PKY, PARK TERRACE DR & 6161 (S)
100000374	6160	2	7.634407			
100000374	6160	3	9.276104			
100000374	6160	4	7.29809			
100000374	6160	5	6.710586			
100000374	6160	6	5.929249			
100000374	6160	7	8.229121			
100000374	6160	8	6.075192			
100000374	6160	9	7.292201			
100000374	6160	10	5.972022			
100000374	6161	1	3.804685		N	BOWER PKY, PARK TERRACE DR & 6161 (S)
100000374	6161	2	3.781892			
100000374	6161	3	4.205575			
100000374	6161	4	3.935545			
100000374	6161	5	4.071905			
100000374	6161	6	3.9445			
100000374	6161	7	4.353522			
100000374	6161	8	4.100378			
100000374	6161	9	3.989269			
100000374	6161	10	3.986923			
100000374	6162	1		BOWER PKY	E	BOWER PKY, PARK TERRACE DR & 6161 (S)
100000374	6162	2				
100000374	6162	3				
100000374	6162	4				
100000374	6162	5				
100000374	6162	6				
100000374	6162	7				
100000374	6162	8				
100000374	6162	9				
100000374	6162	10				
100000375	6196	1	1.232245	COLUMBIANA DR	NW	COLUMBIANA DR, CROSSBOW DR & DRIVEWAY
100000375	6196	2	1.873128			
100000375	6196	3	2.401053			
100000375	6196	4	1.770858			
100000375	6196	5	2.691336			
100000375	6196	6	2.28135			
100000375	6196	7	1.034043			
100000375	6196	8	2.269807			
100000375	6196	9	2.891859			
100000375	6196	10	2.487508			
100000375	6204	1	2.447464	COLUMBIANA DR	SE	COLUMBIANA DR, CROSSBOW DR & DRIVEWAY
100000375	6204	2	2.421529			
100000375	6204	3	2.667277			
100000375	6204	4	2.132527			
100000375	6204	5	2.569792			
100000375	6204	6	2.339024			
100000375	6204	7	2.232103			
100000375	6204	8	1.70929			
100000375	6204	9	1.980985			
100000375	6204	10	2.66061			
100000375	6550	1	9.189493	CROSSBOW DR	NE	COLUMBIANA DR, CROSSBOW DR & DRIVEWAY
100000375	6550	2	9.821291			
100000375	6550	3	15.331876			
100000375	6550	4	13.373304			
100000375	6550	5	8.533775			
100000375	6550	6	6.483385			
100000375	6550	7	16.936274			
100000375	6550	8	11.459084			
100000375	6550	9	11.956767			
100000375	6550	10	13.951281			
100000375	6551	1	9.724709	DRIVEWAY	SW	COLUMBIANA DR, CROSSBOW DR & DRIVEWAY
100000375	6551	2	8.651478			
100000375	6551	3	10.338503			
100000375	6551	4	12.484211			
100000375	6551	5	13.845851			
100000375	6551	6	10.798106			
100000375	6551	7	14.394942			
100000375	6551	8	14.584514			
100000375	6551	9	8.615347			
100000375	6551	10	13.111133			
100000391	5071	1	4.155478	BROAD RIVER RD	NW	BROAD RIVER RD & COLUMBIANA DR
100000391	5071	2	3.941357			
100000391	5071	3	2.866353			
100000391	5071	4	3.544821			
100000391	5071	5	3.151783			
100000391	5071	6	3.652109			

Node	Superlink	Run	Average Control Delay	Approach Street Name	Direction	Intersection
100000391	5071	7	2.807328			
100000391	5071	8	3.45913			
100000391	5071	9	3.362407			
100000391	5071	10	3.481905			
100000391	6214	1	45.367045	COLUMBIANA DR	NE	BROAD RIVER RD & COLUMBIANA DR
100000391	6214	2	40.310634			
100000391	6214	3	48.956801			
100000391	6214	4	55.761964			
100000391	6214	5	43.716985			
100000391	6214	6	46.571323			
100000391	6214	7	42.668993			
100000391	6214	8	55.307053			
100000391	6214	9	48.084386			
100000391	6214	10	48.534074			
100000391	6224	1	11.677695	BROAD RIVER RD	SE	BROAD RIVER RD & COLUMBIANA DR
100000391	6224	2	10.078238			
100000391	6224	3	7.956516			
100000391	6224	4	10.067605			
100000391	6224	5	10.189401			
100000391	6224	6	10.526165			
100000391	6224	7	8.131515			
100000391	6224	8	10.080035			
100000391	6224	9	9.239288			
100000391	6224	10	8.688243			
100000392	6121	1	0.793851	JAMIL RD	NW	TRAM RD & JAMIL RD
100000392	6121	2	0.59121			
100000392	6121	3	0.394834			
100000392	6121	4	0.807159			
100000392	6121	5	0.38662			
100000392	6121	6	0.688875			
100000392	6121	7	0.662581			
100000392	6121	8	1.149858			
100000392	6121	9	2.776806			
100000392	6121	10	0.560386			
100000392	6127	1	0.290381	JAMIL RD	SE	TRAM RD & JAMIL RD
100000392	6127	2	0.166666			
100000392	6127	3	0.052684			
100000392	6127	4	0.15419			
100000392	6127	5	0.155079			
100000392	6127	6	0.350868			
100000392	6127	7	0.068396			
100000392	6127	8	0.21307			
100000392	6127	9	0.220599			
100000392	6127	10	0.394533			
100000392	6261	1	7.108564	TRAM RD	NE	TRAM RD & JAMIL RD
100000392	6261	2	7.668901			
100000392	6261	3	7.286121			
100000392	6261	4	7.421667			
100000392	6261	5	7.147912			
100000392	6261	6	7.772962			
100000392	6261	7	7.146305			
100000392	6261	8	7.6124			
100000392	6261	9	7.615859			
100000392	6261	10	7.433709			
100000394	6204	1	0	COLUMBIANA DR	NW	COLUMBIANA DR, COLUMBIA AVE & DRIVEWAY
100000394	6204	2	0			
100000394	6204	3	0			
100000394	6204	4	0			
100000394	6204	5	0			
100000394	6204	6	0			
100000394	6204	7	0			
100000394	6204	8	0			
100000394	6204	9	0			
100000394	6204	10	0			
100000394	6208	1	0	COLUMBIANA DR	SE	COLUMBIANA DR, COLUMBIA AVE & DRIVEWAY
100000394	6208	2	0			
100000394	6208	3	0			
100000394	6208	4	0			
100000394	6208	5	0			
100000394	6208	6	0			
100000394	6208	7	0			
100000394	6208	8	0			
100000394	6208	9	0			
100000394	6208	10	0			
100000394	6210	1		COLUMBIA AVE	NE	COLUMBIANA DR, COLUMBIA AVE & DRIVEWAY
100000394	6210	2				
100000394	6210	3				
100000394	6210	4				
100000394	6210	5				
100000394	6210	6				
100000394	6210	7				
100000394	6210	8				
100000394	6210	9				
100000394	6210	10				
100000394	6549	1		DRIVEWAY	SW	COLUMBIANA DR, COLUMBIA AVE & DRIVEWAY
100000394	6549	2				
100000394	6549	3				
100000394	6549	4				
100000394	6549	5				
100000394	6549	6				
100000394	6549	7				
100000394	6549	8				
100000394	6549	9				
100000394	6549	10				
100000395	5084	1	31.259775	LAKE MURRAY BLVD	W	LAKE MURRAY BLVD & COLUMBIANA DR
100000395	5084	2	34.688696			
100000395	5084	3	40.484405			
100000395	5084	4	33.577385			
100000395	5084	5	34.239681			
100000395	5084	6	64.34021			
100000395	5084	7	32.864627			
100000395	5084	8	61.109689			
100000395	5084	9	68.512842			
100000395	5084	10	63.564926			
100000395	6208	1	38.436377	COLUMBIANA DR	NW	LAKE MURRAY BLVD & COLUMBIANA DR
100000395	6208	2	35.225666			
100000395	6208	3	42.52561			
100000395	6208	4	42.369707			
100000395	6208	5	39.705118			
100000395	6208	6	34.779124			
100000395	6208	7	42.12476			
100000395	6208	8	38.417751			

Node	Superlink	Run	Average Control Delay	Approach Street Name	Direction	Intersection
100000395	6208	9	37.060482			
100000395	6208	10	39.421006			
100000395	6214	1	49.385555	COLUMBIANA DR	S	LAKE MURRAY BLVD & COLUMBIANA DR
100000395	6214	2	58.440319			
100000395	6214	3	27.401218			
100000395	6214	4	35.146809			
100000395	6214	5	39.143186			
100000395	6214	6	33.853068			
100000395	6214	7	31.239109			
100000395	6214	8	28.41374			
100000395	6214	9	25.377523			
100000395	6214	10	11.558799			
100000395	6215	1	22.634975	LAKE MURRAY BLVD	E	LAKE MURRAY BLVD & COLUMBIANA DR
100000395	6215	2	19.467008			
100000395	6215	3	23.666287			
100000395	6215	4	25.205826			
100000395	6215	5	22.646566			
100000395	6215	6	21.6855			
100000395	6215	7	20.711326			
100000395	6215	8	27.684067			
100000395	6215	9	21.280871			
100000395	6215	10	23.183237			
100000398	5101	1	0	HARBISON BLVD	W	HARBISON BLVD & PARKRIDGE DR
100000398	5101	2	0.067009			
100000398	5101	3	0			
100000398	5101	4	0.004669			
100000398	5101	5	0.002339			
100000398	5101	6	0.005009			
100000398	5101	7	0			
100000398	5101	8	0.002584			
100000398	5101	9	0.064414			
100000398	5101	10	0			
100000398	6267	1	9.135289	PARKRIDGE DR	SE	HARBISON BLVD & PARKRIDGE DR
100000398	6267	2	9.449934			
100000398	6267	3	8.585055			
100000398	6267	4	9.027575			
100000398	6267	5	8.361757			
100000398	6267	6	9.200737			
100000398	6267	7	8.603411			
100000398	6267	8	8.357962			
100000398	6267	9	8.886228			
100000398	6267	10	8.515158			
100000398	6268	1	0	HARBISON BLVD	NE	HARBISON BLVD & PARKRIDGE DR
100000398	6268	2	0			
100000398	6268	3	0			
100000398	6268	4	0			
100000398	6268	5	0.265634			
100000398	6268	6	0.392265			
100000398	6268	7	0			
100000398	6268	8	0			
100000398	6268	9	0			
100000398	6268	10	0.043206			
100000399	5113	1	29.724347	PINEY GROVE RD	E	PINEY GROVE RD & FERNANDINA RD
100000399	5113	2	34.444542			
100000399	5113	3	27.351037			
100000399	5113	4	31.727972			
100000399	5113	5	27.737922			
100000399	5113	6	26.625892			
100000399	5113	7	30.973179			
100000399	5113	8	29.248158			
100000399	5113	9	27.359111			
100000399	5113	10	32.673126			
100000399	6263	1	14.605243	PINEY GROVE RD	W	PINEY GROVE RD & FERNANDINA RD
100000399	6263	2	19.537217			
100000399	6263	3	17.159069			
100000399	6263	4	18.284995			
100000399	6263	5	15.549111			
100000399	6263	6	16.204923			
100000399	6263	7	17.30763			
100000399	6263	8	16.873096			
100000399	6263	9	17.858271			
100000399	6263	10	17.856341			
100000399	6265	1	9.983057	FERNANDINA RD	SE	PINEY GROVE RD & FERNANDINA RD
100000399	6265	2	7.76076			
100000399	6265	3	7.626983			
100000399	6265	4	10.31618			
100000399	6265	5	10.984186			
100000399	6265	6	9.640782			
100000399	6265	7	7.459755			
100000399	6265	8	7.671578			
100000399	6265	9	7.542071			
100000399	6265	10	7.783807			
100000399	6266	1	21.090035	FERNANDINA RD	N	PINEY GROVE RD & FERNANDINA RD
100000399	6266	2	22.801105			
100000399	6266	3	21.143981			
100000399	6266	4	21.052304			
100000399	6266	5	24.373063			
100000399	6266	6	20.103306			
100000399	6266	7	20.9643			
100000399	6266	8	21.563127			
100000399	6266	9	21.822229			
100000399	6266	10	19.426634			
100000401	5093	1	9.749765	LAKE MURRAY BLVD	E	KINLEY RD, LAKE MURRAY BLVD & PARKRIDGE DR
100000401	5093	2	10.374998			
100000401	5093	3	10.393006			
100000401	5093	4	8.653384			
100000401	5093	5	8.823642			
100000401	5093	6	10.278849			
100000401	5093	7	10.15607			
100000401	5093	8	9.354197			
100000401	5093	9	9.656984			
100000401	5093	10	7.693911			
100000401	6276	1	23.41039	KINLEY RD	S	KINLEY RD, LAKE MURRAY BLVD & PARKRIDGE DR
100000401	6276	2	23.867309			
100000401	6276	3	28.062469			
100000401	6276	4	25.518366			
100000401	6276	5	22.926247			
100000401	6276	6	22.720945			
100000401	6276	7	25.729632			
100000401	6276	8	20.678312			
100000401	6276	9	19.662983			
100000401	6276	10	22.959728			

Node	Superlink	Run	Average Control Delay	Approach Street Name	Direction	Intersection
100000401	6313	1	17.948422	LAKE MURRAY BLVD	W	KINLEY RD, LAKE MURRAY BLVD & PARKRIDGE DR
100000401	6313	2	13.566984			
100000401	6313	3	16.840871			
100000401	6313	4	18.28825			
100000401	6313	5	21.614751			
100000401	6313	6	20.311245			
100000401	6313	7	13.188689			
100000401	6313	8	11.947287			
100000401	6313	9	18.636107			
100000401	6313	10	19.076236			
100000401	6556	1	29.321445	PARKRIDGE DR	N	KINLEY RD, LAKE MURRAY BLVD & PARKRIDGE DR
100000401	6556	2	34.782448			
100000401	6556	3	27.099966			
100000401	6556	4	37.009942			
100000401	6556	5	38.018173			
100000401	6556	6	44.752278			
100000401	6556	7	35.648898			
100000401	6556	8	45.842784			
100000401	6556	9	35.413077			
100000401	6556	10	27.225491			
100000438	2044	1	0	RAMP	SE	RAMP, SUNSET BLVD & I-20 EXIT 61 EB ON RAMP
100000438	2044	2	0			
100000438	2044	3	0			
100000438	2044	4	0			
100000438	2044	5	0			
100000438	2044	6	0			
100000438	2044	7	0			
100000438	2044	8	0			
100000438	2044	9	0			
100000438	2044	10	0			
100000438	5021	1	3.066888	SUNSET BLVD	NW	RAMP, SUNSET BLVD & I-20 EXIT 61 EB ON RAMP
100000438	5021	2	3.632696			
100000438	5021	3	3.808816			
100000438	5021	4	3.458896			
100000438	5021	5	3.98564			
100000438	5021	6	3.840679			
100000438	5021	7	3.859763			
100000438	5021	8	3.13253			
100000438	5021	9	3.356136			
100000438	5021	10	3.395049			
100000438	5023	1	0.525842	SUNSET BLVD	SE	RAMP, SUNSET BLVD & I-20 EXIT 61 EB ON RAMP
100000438	5023	2	0.409567			
100000438	5023	3	0.395331			
100000438	5023	4	0.525896			
100000438	5023	5	0.319911			
100000438	5023	6	0.181134			
100000438	5023	7	0.306343			
100000438	5023	8	0.711804			
100000438	5023	9	0.380326			
100000438	5023	10	0.563571			
100000446	2047	1	0	RAMP	S	RAMP & I-20 EXIT 63 WB ON RAMP
100000446	2047	2	0			
100000446	2047	3	0			
100000446	2047	4	0			
100000446	2047	5	0			
100000446	2047	6	0			
100000446	2047	7	0			
100000446	2047	8	0			
100000446	2047	9	0			
100000446	2047	10	0			
100000446	2059	1	0	RAMP	SW	RAMP & I-20 EXIT 63 WB ON RAMP
100000446	2059	2	0			
100000446	2059	3	0			
100000446	2059	4	0			
100000446	2059	5	0			
100000446	2059	6	0			
100000446	2059	7	0			
100000446	2059	8	0			
100000446	2059	9	0			
100000446	2059	10	0			
100000450	2060	1	0	RAMP	E	BUSH RIVER RD, RAMP & I-20 EXIT 63 EB ON RAMP
100000450	2060	2	0			
100000450	2060	3	0			
100000450	2060	4	0			
100000450	2060	5	0			
100000450	2060	6	0			
100000450	2060	7	0			
100000450	2060	8	0			
100000450	2060	9	0			
100000450	2060	10	0			
100000450	5037	1	0	BUSH RIVER RD	E	BUSH RIVER RD, RAMP & I-20 EXIT 63 EB ON RAMP
100000450	5037	2	0			
100000450	5037	3	0			
100000450	5037	4	0			
100000450	5037	5	0			
100000450	5037	6	0			
100000450	5037	7	0			
100000450	5037	8	0			
100000450	5037	9	0			
100000450	5037	10	0			
100000450	5038	1	0.958611	BUSH RIVER RD	NW	BUSH RIVER RD, RAMP & I-20 EXIT 63 EB ON RAMP
100000450	5038	2	1.155221			
100000450	5038	3	0.925483			
100000450	5038	4	1.086191			
100000450	5038	5	1.606809			
100000450	5038	6	1.455927			
100000450	5038	7	0.889968			
100000450	5038	8	1.054537			
100000450	5038	9	1.10375			
100000450	5038	10	1.365422			
100000452	2071	1	17.400745	RAMP	W	RAMP & BUSH RIVER RD
100000452	2071	2	16.40255			
100000452	2071	3	17.823485			
100000452	2071	4	18.253486			
100000452	2071	5	17.246195			
100000452	2071	6	19.094651			
100000452	2071	7	15.850254			
100000452	2071	8	18.173413			
100000452	2071	9	19.155388			
100000452	2071	10	17.258156			
100000452	5034	1	0.065993	BUSH RIVER RD	NW	RAMP & BUSH RIVER RD
100000452	5034	2	0.092389			

Node	Superlink	Run	Average Control Delay	Approach Street Name	Direction	Intersection
100000452	5034	3	0.104428			
100000452	5034	4	0.08905			
100000452	5034	5	0.02332			
100000452	5034	6	0.156645			
100000452	5034	7	0.020587			
100000452	5034	8	0.149923			
100000452	5034	9	0.48787			
100000452	5034	10	0.017999			
100000452	5457	1	3.706231	BUSH RIVER RD	SE	RAMP & BUSH RIVER RD
100000452	5457	2	3.167106			
100000452	5457	3	2.358			
100000452	5457	4	2.499109			
100000452	5457	5	3.705645			
100000452	5457	6	4.549741			
100000452	5457	7	5.213647			
100000452	5457	8	3.9434			
100000452	5457	9	4.983644			
100000452	5457	10	3.583802			
100000455	5457	1	2.476222	BUSH RIVER RD	NW	FRONTAGE RD & BUSH RIVER RD
100000455	5457	2	2.430963			
100000455	5457	3	2.56498			
100000455	5457	4	2.415733			
100000455	5457	5	2.619427			
100000455	5457	6	3.355673			
100000455	5457	7	2.783477			
100000455	5457	8	3.210159			
100000455	5457	9	3.467898			
100000455	5457	10	2.54308			
100000455	6538	1	38.832677	FRONTAGE RD	SW	FRONTAGE RD & BUSH RIVER RD
100000455	6538	2	38.663412			
100000455	6538	3	37.379			
100000455	6538	4	40.34768			
100000455	6538	5	36.839449			
100000455	6538	6	32.940571			
100000455	6538	7	36.650494			
100000455	6538	8	39.646875			
100000455	6538	9	39.84358			
100000455	6538	10	39.310458			
100000455	6539	1	1.91813	BUSH RIVER RD	SE	FRONTAGE RD & BUSH RIVER RD
100000455	6539	2	2.881573			
100000455	6539	3	2.08191			
100000455	6539	4	1.5437			
100000455	6539	5	1.89036			
100000455	6539	6	2.344067			
100000455	6539	7	2.809859			
100000455	6539	8	3.131109			
100000455	6539	9	2.919232			
100000455	6539	10	1.958654			
100000467	3225	1		RAMP	SW	RAMP & I-126 WB ON RAMP FROM GREYSTONE BLVD
100000467	3225	2				
100000467	3225	3				
100000467	3225	4				
100000467	3225	5				
100000467	3225	6				
100000467	3225	7				
100000467	3225	8				
100000467	3225	9				
100000467	3225	10				
100000467	3238	1	0	RAMP	W	RAMP & I-126 WB ON RAMP FROM GREYSTONE BLVD
100000467	3238	2	0			
100000467	3238	3	0			
100000467	3238	4	0			
100000467	3238	5	0			
100000467	3238	6	0			
100000467	3238	7	0			
100000467	3238	8	0			
100000467	3238	9	0			
100000467	3238	10	0			
100000468	3228	1	0	EXIT 103 WB ON RAMP	NW	EXIT 103 WB ON RAMP & I-26 EXIT 103 WB ON RAMP
100000468	3228	2	0			
100000468	3228	3	0			
100000468	3228	4	0			
100000468	3228	5	0			
100000468	3228	6	0			
100000468	3228	7	0			
100000468	3228	8	0			
100000468	3228	9	0			
100000468	3228	10	0			
100000468	3241	1		EXIT 103 WB ON RAMP	W	EXIT 103 WB ON RAMP & I-26 EXIT 103 WB ON RAMP
100000468	3241	2	0			
100000468	3241	3	0			
100000468	3241	4	0			
100000468	3241	5				
100000468	3241	6				
100000468	3241	7				
100000468	3241	8	0			
100000468	3241	9	0			
100000468	3241	10				
100000476	3257	1	0	RAMP	N	RAMP
100000476	3257	2	0			
100000476	3257	3	0			
100000476	3257	4	0			
100000476	3257	5	0			
100000476	3257	6	0			
100000476	3257	7	0			
100000476	3257	8	0			
100000476	3257	9	0			
100000476	3257	10	0			
100000476	3262	1	0	RAMP	N	RAMP
100000476	3262	2	0			
100000476	3262	3	0			
100000476	3262	4	0			
100000476	3262	5	0			
100000476	3262	6	0			
100000476	3262	7	0			
100000476	3262	8	0			
100000476	3262	9	0			
100000476	3262	10	0			
100000494	3302	1	0	EXIT 106 WB ON RAMP	NW	EXIT 106 WB ON RAMP & I-26 EXIT 106 WB ON RAMP
100000494	3302	2	0			
100000494	3302	3	0			
100000494	3302	4	0			

Node	Superlink	Run	Average Control Delay	Approach Street Name	Direction	Intersection
100000494	3302	5	0			
100000494	3302	6	0			
100000494	3302	7	0			
100000494	3302	8	0			
100000494	3302	9	0			
100000494	3302	10	0			
100000494	3306	1	0	EXIT 106 WB ON RAMP	NW	EXIT 106 WB ON RAMP & I-26 EXIT 106 WB ON RAMP
100000494	3306	2	0			
100000494	3306	3	0			
100000494	3306	4	0			
100000494	3306	5	0			
100000494	3306	6	0			
100000494	3306	7	0			
100000494	3306	8	0			
100000494	3306	9	0			
100000494	3306	10	0			
100000497	3310	1	0	RAMP	SE	RAMP & I-26 EXIT 104 EB ON RAMP
100000497	3310	2	0			
100000497	3310	3	0			
100000497	3310	4	0			
100000497	3310	5	0			
100000497	3310	6	0			
100000497	3310	7	0			
100000497	3310	8	0			
100000497	3310	9	0			
100000497	3310	10	0			
100000497	6545	1	0	RAMP	SE	RAMP & I-26 EXIT 104 EB ON RAMP
100000497	6545	2	0			
100000497	6545	3	0			
100000497	6545	4	0			
100000497	6545	5	0			
100000497	6545	6	0			
100000497	6545	7	0			
100000497	6545	8	0			
100000497	6545	9	0			
100000497	6545	10	0			
100000503	3325	1	0	RAMP	SE	RAMP, 6472 (W) & I-26 EXIT 103 EB ON RAMP
100000503	3325	2	0			
100000503	3325	3	0			
100000503	3325	4	0			
100000503	3325	5	0			
100000503	3325	6	0			
100000503	3325	7	0			
100000503	3325	8	0			
100000503	3325	9	0			
100000503	3325	10	0			
100000503	6472	1	0		E	RAMP, 6472 (W) & I-26 EXIT 103 EB ON RAMP
100000503	6472	2	0			
100000503	6472	3	0			
100000503	6472	4	0			
100000503	6472	5	0			
100000503	6472	6	0			
100000503	6472	7	0			
100000503	6472	8	0			
100000503	6472	9	0			
100000503	6472	10	0			
100000520	3345	1		EXIT 102 WB ON RAMP	N	EXIT 102 WB ON RAMP & I-26 EXIT 102 WB ON RAMP
100000520	3345	2				
100000520	3345	3				
100000520	3345	4				
100000520	3345	5				
100000520	3345	6				
100000520	3345	7				
100000520	3345	8				
100000520	3345	9				
100000520	3345	10				
100000520	3350	1	0	EXIT 102 WB ON RAMP	N	EXIT 102 WB ON RAMP & I-26 EXIT 102 WB ON RAMP
100000520	3350	2	0			
100000520	3350	3	0			
100000520	3350	4	0			
100000520	3350	5	0			
100000520	3350	6	0			
100000520	3350	7	0			
100000520	3350	8	0			
100000520	3350	9	0			
100000520	3350	10	0			
100000523	3355	1	0	ON-RAMP from WB	S	ON-RAMP from WB, ON-RAMP from EB & I-26 EXIT 101 EB ON RAMP
100000523	3355	2	0			
100000523	3355	3	0			
100000523	3355	4	0			
100000523	3355	5	0			
100000523	3355	6	0			
100000523	3355	7	0			
100000523	3355	8	0			
100000523	3355	9	0			
100000523	3355	10	0			
100000523	3356	1	0	ON-RAMP from EB	S	ON-RAMP from WB, ON-RAMP from EB & I-26 EXIT 101 EB ON RAMP
100000523	3356	2	0			
100000523	3356	3	0			
100000523	3356	4	0			
100000523	3356	5	0			
100000523	3356	6	0			
100000523	3356	7	0			
100000523	3356	8	0			
100000523	3356	9	0			
100000523	3356	10	0			
100000528	3360	1		EXIT 101 WB ON RAMP	N	EXIT 101 WB ON RAMP & I-26 EXIT 101 WB ON RAMP
100000528	3360	2				
100000528	3360	3				
100000528	3360	4				
100000528	3360	5				
100000528	3360	6				
100000528	3360	7				
100000528	3360	8				
100000528	3360	9				
100000528	3360	10				
100000528	3364	1	0	EXIT 101 WB ON RAMP	N	EXIT 101 WB ON RAMP & I-26 EXIT 101 WB ON RAMP
100000528	3364	2	0			
100000528	3364	3	0			
100000528	3364	4	0			
100000528	3364	5	0			
100000528	3364	6	0			

Node	Superlink	Run	Average Control Delay	Approach Street Name	Direction	Intersection
100000528	3364	7	0			
100000528	3364	8	0			
100000528	3364	9	0			
100000528	3364	10	0			
100000702	4338	1	0	RAMP	SW	RAMP & I-20 EXIT 65 WB ON RAMP
100000702	4338	2	0			
100000702	4338	3	0			
100000702	4338	4	0			
100000702	4338	5	0			
100000702	4338	6	0			
100000702	4338	7	0			
100000702	4338	8	0			
100000702	4338	9	0			
100000702	4338	10	0			
100000702	4343	1	0	RAMP	SW	RAMP & I-20 EXIT 65 WB ON RAMP
100000702	4343	2	0			
100000702	4343	3	0			
100000702	4343	4	0			
100000702	4343	5	0			
100000702	4343	6	0			
100000702	4343	7	0			
100000702	4343	8	0			
100000702	4343	9	0			
100000702	4343	10	0			
100000707	5166	1	0	MONTICELLO RD	NW	MONTICELLO RD, SERVICE RD & RAMP
100000707	5166	2	0			
100000707	5166	3	0			
100000707	5166	4	0			
100000707	5166	5	0			
100000707	5166	6	0			
100000707	5166	7	0			
100000707	5166	8	0			
100000707	5166	9	0			
100000707	5166	10	0			
100000707	5168	1	0	SERVICE RD	W	MONTICELLO RD, SERVICE RD & RAMP
100000707	5168	2	0			
100000707	5168	3	0			
100000707	5168	4	0			
100000707	5168	5	0			
100000707	5168	6	0			
100000707	5168	7	0			
100000707	5168	8	0			
100000707	5168	9	0			
100000707	5168	10	0			
100000707	5174	1	0.669219	MONTICELLO RD	SE	MONTICELLO RD, SERVICE RD & RAMP
100000707	5174	2	1.196805			
100000707	5174	3	1.283036			
100000707	5174	4	0.72072			
100000707	5174	5	0.791178			
100000707	5174	6	0.537258			
100000707	5174	7	0.802041			
100000707	5174	8	0.923239			
100000707	5174	9	1.238394			
100000707	5174	10	1.089145			
100000709	4352	1	0	RAMP	S	RAMP & I-20 EXIT 68 WB ON RAMP
100000709	4352	2	0			
100000709	4352	3	0			
100000709	4352	4	0			
100000709	4352	5	0			
100000709	4352	6	0			
100000709	4352	7	0			
100000709	4352	8	0			
100000709	4352	9	0			
100000709	4352	10	0			
100000709	4353	1	0	RAMP	S	RAMP & I-20 EXIT 68 WB ON RAMP
100000709	4353	2	0			
100000709	4353	3	0			
100000709	4353	4	0			
100000709	4353	5	0			
100000709	4353	6	0			
100000709	4353	7	0			
100000709	4353	8	0			
100000709	4353	9	0			
100000709	4353	10	0			
100000710	4356	1	0	I-20 EXIT 68 WB OFF RAMP	W	I-20 EXIT 68 WB OFF RAMP & SERVICE RD
100000710	4356	2	0			
100000710	4356	3	0			
100000710	4356	4	0			
100000710	4356	5	0			
100000710	4356	6	0			
100000710	4356	7	0			
100000710	4356	8	0			
100000710	4356	9	0			
100000710	4356	10	0			
100000712	5157	1	0.065173	BUCKNER RD	NE	BUCKNER RD & RAMP
100000712	5157	2	0.08012			
100000712	5157	3	0.055099			
100000712	5157	4	0.069276			
100000712	5157	5	0.043878			
100000712	5157	6	0.038111			
100000712	5157	7	0.050173			
100000712	5157	8	0.044552			
100000712	5157	9	0.050043			
100000712	5157	10	0.063141			
100000712	5160	1	11.413688	BUCKNER RD	SW	BUCKNER RD & RAMP
100000712	5160	2	11.938114			
100000712	5160	3	13.39835			
100000712	5160	4	11.818943			
100000712	5160	5	10.299576			
100000712	5160	6	11.506174			
100000712	5160	7	8.929863			
100000712	5160	8	10.237247			
100000712	5160	9	12.6728			
100000712	5160	10	12.166929			
100000804	6261	1	19.099487	TRAM RD	SW	TRAM RD & SIDNEY RD
100000804	6261	2	14.481462			
100000804	6261	3	19.481273			
100000804	6261	4	19.31641			
100000804	6261	5	15.986382			
100000804	6261	6	19.767848			
100000804	6261	7	12.368413			
100000804	6261	8	15.425771			

Node	Superlink	Run	Average Control Delay	Approach Street Name	Direction	Intersection
100000804	6261	9	21.197417			
100000804	6261	10	27.114279			
100000804	6457	1	20.581034	SIDNEY RD	NW	TRAM RD & SIDNEY RD
100000804	6457	2	20.314447			
100000804	6457	3	18.935647			
100000804	6457	4	48.449956			
100000804	6457	5	19.464437			
100000804	6457	6	24.409414			
100000804	6457	7	16.672553			
100000804	6457	8	16.168232			
100000804	6457	9	22.085314			
100000804	6457	10	26.258363			
100000804	6458	1	2.049391	TRAM RD	NE	TRAM RD & SIDNEY RD
100000804	6458	2	2.236877			
100000804	6458	3	2.092804			
100000804	6458	4	2.217669			
100000804	6458	5	2.389853			
100000804	6458	6	1.885022			
100000804	6458	7	2.131112			
100000804	6458	8	2.067517			
100000804	6458	9	2.36847			
100000804	6458	10	1.962264			
100000882	5151	1		SERVICE RD	SW	SERVICE RD, 6449 (S) & 6448 (W)
100000882	5151	2				
100000882	5151	3				
100000882	5151	4				
100000882	5151	5				
100000882	5151	6				
100000882	5151	7				
100000882	5151	8				
100000882	5151	9				
100000882	5151	10				
100000882	6446	1	0	SERVICE RD	NE	SERVICE RD, 6449 (S) & 6448 (W)
100000882	6446	2	0			
100000882	6446	3	0			
100000882	6446	4	0			
100000882	6446	5	0			
100000882	6446	6	0			
100000882	6446	7	0			
100000882	6446	8	0			
100000882	6446	9	0			
100000882	6446	10	0			
100000882	6449	1	0		N	SERVICE RD, 6449 (S) & 6448 (W)
100000882	6449	2	0			
100000882	6449	3	0			
100000882	6449	4	0			
100000882	6449	5	0			
100000882	6449	6	0			
100000882	6449	7	0			
100000882	6449	8	0			
100000882	6449	9	0			
100000882	6449	10	0			
100000883	5148	1	0	BROAD RIVER RD	NW	BROAD RIVER RD & 6448 (E)
100000883	5148	2	0			
100000883	5148	3	0			
100000883	5148	4	0			
100000883	5148	5	0.000052			
100000883	5148	6	0			
100000883	5148	7	0			
100000883	5148	8	0			
100000883	5148	9	0.000071			
100000883	5148	10	0			
100000883	6447	1	10.669476	BROAD RIVER RD	SE	BROAD RIVER RD & 6448 (E)
100000883	6447	2	9.804722			
100000883	6447	3	10.207409			
100000883	6447	4	10.240508			
100000883	6447	5	10.440002			
100000883	6447	6	11.032872			
100000883	6447	7	10.730527			
100000883	6447	8	11.122107			
100000883	6447	9	8.583115			
100000883	6447	10	11.58722			
100000883	6448	1			W	BROAD RIVER RD & 6448 (E)
100000883	6448	2				
100000883	6448	3				
100000883	6448	4				
100000883	6448	5				
100000883	6448	6				
100000883	6448	7				
100000883	6448	8				
100000883	6448	9				
100000883	6448	10				
100000895	3229	1	0	RAMP	SW	RAMP & PINEY GROVE RD
100000895	3229	2	0			
100000895	3229	3	0			
100000895	3229	4	0			
100000895	3229	5	0			
100000895	3229	6	0			
100000895	3229	7	0			
100000895	3229	8	0			
100000895	3229	9	0			
100000895	3229	10	0			
100000895	6543	1	8.199821	PINEY GROVE RD	E	RAMP & PINEY GROVE RD
100000895	6543	2	6.582363			
100000895	6543	3	5.818253			
100000895	6543	4	6.247297			
100000895	6543	5	6.540874			
100000895	6543	6	5.894443			
100000895	6543	7	8.216757			
100000895	6543	8	6.965159			
100000895	6543	9	6.755744			
100000895	6543	10	6.83377			
100000895	6544	1	0	PINEY GROVE RD	W	RAMP & PINEY GROVE RD
100000895	6544	2	0			
100000895	6544	3	0			
100000895	6544	4	0			
100000895	6544	5	0			
100000895	6544	6	0			
100000895	6544	7	0			
100000895	6544	8	0			
100000895	6544	9	0			
100000895	6544	10	0			

Node	Superlink	Run	Average Control Delay	Approach Street Name	Direction	Intersection
100000897	3243	1	4.049559	I-126 WB OFF RAMP TO COLONIAL LIFE BLVD	NE	I-126 WB OFF RAMP TO COLONIAL LIFE BLVD, W COLONIAL LIFE BLVD, COLONIAL LIFE BLVD W & I-126 EB ON RA
100000897	3243	2	4.580667			
100000897	3243	3	2.673512			
100000897	3243	4	5.395766			
100000897	3243	5	4.243945			
100000897	3243	6	5.132029			
100000897	3243	7	7.114619			
100000897	3243	8	3.592918			
100000897	3243	9	4.342561			
100000897	3243	10	4.839221			
100000897	5134	1	7.521105	W COLONIAL LIFE BLVD	NW	I-126 WB OFF RAMP TO COLONIAL LIFE BLVD, W COLONIAL LIFE BLVD, COLONIAL LIFE BLVD W & I-126 EB ON RA
100000897	5134	2	7.772147			
100000897	5134	3	7.706188			
100000897	5134	4	7.504508			
100000897	5134	5	6.591481			
100000897	5134	6	6.938751			
100000897	5134	7	6.93704			
100000897	5134	8	7.382006			
100000897	5134	9	7.588717			
100000897	5134	10	7.163211			
100000897	6471	1	0.364518	COLONIAL LIFE BLVD W	S	I-126 WB OFF RAMP TO COLONIAL LIFE BLVD, W COLONIAL LIFE BLVD, COLONIAL LIFE BLVD W & I-126 EB ON RA
100000897	6471	2	0.251818			
100000897	6471	3	0.320518			
100000897	6471	4	0.28302			
100000897	6471	5	0.219434			
100000897	6471	6	0.30716			
100000897	6471	7	0.288036			
100000897	6471	8	0.269381			
100000897	6471	9	0.281064			
100000897	6471	10	0.330678			
100000898	51	1	34.960103	I-26 EXIT 108 EB OFF RAMP	S	I-26 EXIT 108 EB OFF RAMP, BUSH RIVER RD & RAMF
100000898	51	2	38.583927			
100000898	51	3	42.696917			
100000898	51	4	43.758758			
100000898	51	5	39.600954			
100000898	51	6	46.972507			
100000898	51	7	38.899804			
100000898	51	8	42.361565			
100000898	51	9	37.36562			
100000898	51	10	40.533457			
100000898	5130	1	24.749584	BUSH RIVER RD	N	I-26 EXIT 108 EB OFF RAMP, BUSH RIVER RD & RAMF
100000898	5130	2	17.895357			
100000898	5130	3	21.792044			
100000898	5130	4	22.892252			
100000898	5130	5	17.081384			
100000898	5130	6	22.613121			
100000898	5130	7	19.248726			
100000898	5130	8	18.689127			
100000898	5130	9	22.47761			
100000898	5130	10	16.783401			
100000898	5131	1	5.496546	BUSH RIVER RD	E	I-26 EXIT 108 EB OFF RAMP, BUSH RIVER RD & RAMF
100000898	5131	2	6.169249			
100000898	5131	3	5.525234			
100000898	5131	4	5.032874			
100000898	5131	5	6.041556			
100000898	5131	6	5.42113			
100000898	5131	7	4.686054			
100000898	5131	8	6.368073			
100000898	5131	9	5.691841			
100000898	5131	10	6.024457			
100000898	6503	1	7.49908	BUSH RIVER RD	W	I-26 EXIT 108 EB OFF RAMP, BUSH RIVER RD & RAMF
100000898	6503	2	8.062566			
100000898	6503	3	7.627096			
100000898	6503	4	6.223433			
100000898	6503	5	7.826788			
100000898	6503	6	6.703905			
100000898	6503	7	6.206044			
100000898	6503	8	8.97493			
100000898	6503	9	9.224224			
100000898	6503	10	8.350507			
100000899	3298	1	9.211356	EXIT 106 WB OFF RAMP	SE	EXIT 106 WB OFF RAMP & BURNING TREE RD
100000899	3298	2	8.589651			
100000899	3298	3	9.313532			
100000899	3298	4	10.443769			
100000899	3298	5	8.849406			
100000899	3298	6	10.24071			
100000899	3298	7	9.628803			
100000899	3298	8	8.582685			
100000899	3298	9	9.24753			
100000899	3298	10	8.755911			
100000899	6105	1	0	BURNING TREE RD	S	EXIT 106 WB OFF RAMP & BURNING TREE RD
100000899	6105	2	0			
100000899	6105	3	0			
100000899	6105	4	0			
100000899	6105	5	0			
100000899	6105	6	0			
100000899	6105	7	0			
100000899	6105	8	0			
100000899	6105	9	0			
100000899	6105	10	0			
100000899	6106	1	0	BURNING TREE RD	N	EXIT 106 WB OFF RAMP & BURNING TREE RD
100000899	6106	2	0			
100000899	6106	3	0			
100000899	6106	4	0			
100000899	6106	5	0			
100000899	6106	6	0			
100000899	6106	7	0			
100000899	6106	8	0			
100000899	6106	9	0			
100000899	6106	10	0			
100000902	4292	1	27.679237	EXIT 110 WB OFF RAMP	NE	SUNSET BLVD, EXIT 110 WB OFF RAMP & EXIT 108 WB ON RAMP
100000902	4292	2	22.39076			
100000902	4292	3	25.309923			
100000902	4292	4	20.16603			
100000902	4292	5	24.235075			
100000902	4292	6	24.318592			
100000902	4292	7	22.519119			
100000902	4292	8	20.558132			
100000902	4292	9	28.98318			
100000902	4292	10	24.694568			
100000902	4947	1	4.425856	SUNSET BLVD	W	SUNSET BLVD, EXIT 110 WB OFF RAMP & EXIT 108 WB ON RAMP
100000902	4947	2	7.321088			

Node	Superlink	Run	Average Control Delay	Approach Street Name	Direction	Intersection
100000902	4947	3	5.726837			
100000902	4947	4	5.888615			
100000902	4947	5	5.265197			
100000902	4947	6	5.634297			
100000902	4947	7	4.191211			
100000902	4947	8	5.964259			
100000902	4947	9	4.691405			
100000902	4947	10	4.975155			
100000902	4951	1	0.008156	SUNSET BLVD	E	SUNSET BLVD, EXIT 110 WB OFF RAMP & EXIT 108 WB ON RAMP
100000902	4951	2	0.03138			
100000902	4951	3	0.024242			
100000902	4951	4	0.008889			
100000902	4951	5	0.014809			
100000902	4951	6	0.014975			
100000902	4951	7	0.006594			
100000902	4951	8	0.029122			
100000902	4951	9	0.015076			
100000902	4951	10	0.018687			
100000903	4289	1	46.339058	EXIT 110 WB OFF RAMP	NW	RAMP, SUNSET BLVD, EXIT 110 WB OFF RAMP & EXIT 108 WB ON RAMP
100000903	4289	2	42.760773			
100000903	4289	3	42.941468			
100000903	4289	4	44.48757			
100000903	4289	5	43.386108			
100000903	4289	6	44.421419			
100000903	4289	7	45.310652			
100000903	4289	8	41.911013			
100000903	4289	9	45.37644			
100000903	4289	10	44.167595			
100000903	4298	1	28.160446	RAMP	SE	RAMP, SUNSET BLVD, EXIT 110 WB OFF RAMP & EXIT 108 WB ON RAMP
100000903	4298	2	28.858996			
100000903	4298	3	27.764927			
100000903	4298	4	29.528821			
100000903	4298	5	27.895175			
100000903	4298	6	28.021051			
100000903	4298	7	27.259974			
100000903	4298	8	28.00683			
100000903	4298	9	29.01264			
100000903	4298	10	27.663613			
100000903	4950	1	13.585817	SUNSET BLVD	E	RAMP, SUNSET BLVD, EXIT 110 WB OFF RAMP & EXIT 108 WB ON RAMP
100000903	4950	2	14.153209			
100000903	4950	3	13.468588			
100000903	4950	4	14.142249			
100000903	4950	5	13.102235			
100000903	4950	6	13.749313			
100000903	4950	7	12.79538			
100000903	4950	8	13.37083			
100000903	4950	9	13.151272			
100000903	4950	10	13.799137			
100000903	4951	1	31.825416	SUNSET BLVD	W	RAMP, SUNSET BLVD, EXIT 110 WB OFF RAMP & EXIT 108 WB ON RAMP
100000903	4951	2	31.2429			
100000903	4951	3	29.041336			
100000903	4951	4	31.310207			
100000903	4951	5	29.813795			
100000903	4951	6	29.527379			
100000903	4951	7	29.212459			
100000903	4951	8	29.194856			
100000903	4951	9	30.856931			
100000903	4951	10	30.307862			

2015 Existing PM

Node	Superlink	Run	Average Control Delay	Approach Street Name	Direction	Intersection
4	5081	1	3.190454	BROAD RIVER RD	W	WESTERN LN & BROAD RIVER RD
4	5081	2	3.483236			
4	5081	3	3.0			
4	5081	4	3.6			
4	5081	5	3.9			
4	5081	6	3.595102			
4	5081	7	3.986893			
4	5081	8	4.0			
4	5081	9	3.1			
4	5081	10	3.0			
4	6465	1	7.656442	WESTERN LN	S	WESTERN LN & BROAD RIVER RD
4	6465	2	7.641848			
4	6465	3	6.9			
4	6465	4	7.2			
4	6465	5	7.140844			
4	6465	6	7.009156			
4	6465	7	7.0			
4	6465	8	6.9			
4	6465	9	6.9			
4	6465	10	7.18534			
4	6466	1	3.859707	BROAD RIVER RD	E	WESTERN LN & BROAD RIVER RD
4	6466	2	4.3			
4	6466	3	4.7			
4	6466	4	4.504507			
4	6466	5	4.494138			
4	6466	6	4.3			
4	6466	7	4.5			
4	6466	8	4.214322			
4	6466	9	4.442414			
4	6466	10	3.8			
4	6467	1	5.3	WESTERN LN	N	WESTERN LN & BROAD RIVER RD
4	6467	2	6.8			
4	6467	3	5.723124			
4	6467	4	6.887955			
4	6467	5	6.4			
4	6467	6	5.8			
4	6467	7	5.4			
4	6467	8	5.915914			
4	6467	9	6.056252			
4	6467	10	6.2			
11	5487	1	0.0	MORNINGHILL DR	N	MORNINGHILL DR & BURNETTE DR
11	5487	2	0			
11	5487	3	0			
11	5487	4	0.0			
11	5487	5	0.0			
11	5487	6	0.0			
11	5487	7	0			
11	5487	8	0			
11	5487	9	0.0			
11	5487	10	0.0			
11	6536	1		MORNINGHILL DR	S	MORNINGHILL DR & BURNETTE DR
11	6536	2				
11	6536	3				
11	6536	4				
11	6536	5				
11	6536	6				
11	6536	7				
11	6536	8				
11	6536	9				
11	6536	10				
11	6537	1	0	BURNETTE DR	E	MORNINGHILL DR & BURNETTE DR
11	6537	2	0.0			
11	6537	3	0.0			
11	6537	4	0.0			
11	6537	5	0.0			
11	6537	6	0			
11	6537	7	0			
11	6537	8	0.0			
11	6537	9	0.0			
11	6537	10	0.0			
26	5488	1	0	RAMP	S	RAMP & 6502 (NW)
26	5488	2	0			
26	5488	3	0.0			
26	5488	4	0.0			
26	5488	5	0.0			
26	5488	6	0			
26	5488	7	0			
26	5488	8	0.0			
26	5488	9	0.0			
26	5488	10	0.0			
26	6501	1	9.498242	RAMP	N	RAMP & 6502 (NW)
26	6501	2	9.444127			
26	6501	3	9.1			
26	6501	4	10.0			
26	6501	5	9.5			
26	6501	6	8.847524			
26	6501	7	9.25274			
26	6501	8	9.9			
26	6501	9	9.5			
26	6501	10	9.6			
26	6502	1	0		SE	RAMP & 6502 (NW)
26	6502	2	0			
26	6502	3	0.0			
26	6502	4	0.0			
26	6502	5	0.0			
26	6502	6	0			

Node	Superlink	Run	Average Control Delay	Approach Street Name	Direction	Intersection
26	6502	7	0			
26	6502	8	0.0			
26	6502	9	0.0			
26	6502	10	0.0			
28	5140	1	0	GREYSTONE BLVD	S	GREYSTONE BLVD & CANDI LN
28	5140	2	0			
28	5140	3	0.0			
28	5140	4	0			
28	5140	5	0			
28	5140	6	0.0			
28	5140	7	0.0			
28	5140	8	0			
28	5140	9	0			
28	5140	10	0.0			
28	6506	1	6.8	GREYSTONE BLVD	W	GREYSTONE BLVD & CANDI LN
28	6506	2	6.75232			
28	6506	3	6.965107			
28	6506	4	6.9			
28	6506	5	6.8			
28	6506	6	6.6			
28	6506	7	6.445052			
28	6506	8	6.822938			
28	6506	9	6.9			
28	6506	10	6.7			
28	6507	1		CANDI LN	E	GREYSTONE BLVD & CANDI LN
28	6507	2				
28	6507	3				
28	6507	4				
28	6507	5				
28	6507	6				
28	6507	7				
28	6507	8				
28	6507	9				
28	6507	10				
41	6518	1	193.991413	BROAD RIVER RD	NW	DUTCH SQUARE BLVD & BROAD RIVER RD
41	6518	2	156.318002			
41	6518	3	159.4			
41	6518	4	108.4			
41	6518	5	112.3			
41	6518	6	103.856678			
41	6518	7	192.342725			
41	6518	8	185.8			
41	6518	9	163.9			
41	6518	10	147.5			
41	6519	1	32.253152	DUTCH SQUARE BLVD	E	DUTCH SQUARE BLVD & BROAD RIVER RD
41	6519	2	32.601552			
41	6519	3	32.2			
41	6519	4	32.1			
41	6519	5	58.3			
41	6519	6	38.48857			
41	6519	7	37.813374			
41	6519	8	33.2			
41	6519	9	35.8			
41	6519	10	32.522997			
41	6521	1	4.334239	BROAD RIVER RD	SE	DUTCH SQUARE BLVD & BROAD RIVER RD
41	6521	2	3.6			
41	6521	3	3.2			
41	6521	4	3.4			
41	6521	5	3.069544			
41	6521	6	2.889576			
41	6521	7	3.6			
41	6521	8	3.6			
41	6521	9	3.286374			
41	6521	10	4.161584			
43	6519	1	0.0	DUTCH SQUARE BLVD	W	DUTCH SQUARE BLVD & 6522 (N)
43	6519	2	0.0			
43	6519	3	0			
43	6519	4	0			
43	6519	5	0.0			
43	6519	6	0			
43	6519	7	0			
43	6519	8	0.0			
43	6519	9	0.0			
43	6519	10	0			
43	6520	1	53.380283	DUTCH SQUARE BLVD	E	DUTCH SQUARE BLVD & 6522 (N)
43	6520	2	33.1			
43	6520	3	31.7			
43	6520	4	30.8			
43	6520	5	44.618764			
43	6520	6	31.992361			
43	6520	7	86.8			
43	6520	8	35.7			
43	6520	9	29.625449			
43	6520	10	36.182174			
43	6522	1	0.0		SW	DUTCH SQUARE BLVD & 6522 (N)
43	6522	2	0.0			
43	6522	3	0			
43	6522	4	0			
43	6522	5	0.0			
43	6522	6	0.0			
43	6522	7	0.0			
43	6522	8	0			
43	6522	9	0			
43	6522	10	0			
46	6273	1	0.0	PARKRIDGE DR	NE	PARKRIDGE DR & 6555 (NE)
46	6273	2	0.0			
46	6273	3	0			
46	6273	4	0			
46	6273	5	0.0			
46	6273	6	0.0			
46	6273	7	0.0			
46	6273	8	0			
46	6273	9	0			
46	6273	10	0.0			
46	6555	1			SW	PARKRIDGE DR & 6555 (NE)
46	6555	2				
46	6555	3				
46	6555	4				
46	6555	5				
46	6555	6				
46	6555	7				
46	6555	8				

Node	Superlink	Run	Average Control Delay	Approach Street Name	Direction	Intersection
46	6555	9				
46	6555	10				
46	6556	1	8.554598	PARKRIDGE DR	SE	PARKRIDGE DR & 6555 (NE)
46	6556	2	7.776139			
46	6556	3	7.642063			
46	6556	4	9.240823			
46	6556	5	8.60098			
46	6556	6	8.008165			
46	6556	7	8.327437			
46	6556	8	8.799437			
46	6556	9	7.338017			
46	6556	10	7.886398			
100000012	5081	1	26.721163	BROAD RIVER RD	SE	KINLEY RD, BROAD RIVER RD & KENNERLY RD
100000012	5081	2	28.314354			
100000012	5081	3	21.771239			
100000012	5081	4	24.21962			
100000012	5081	5	22.643607			
100000012	5081	6	26.697034			
100000012	5081	7	23.380026			
100000012	5081	8	24.962007			
100000012	5081	9	22.924534			
100000012	5081	10	26.099373			
100000012	6276	1	56.818397	KINLEY RD	N	KINLEY RD, BROAD RIVER RD & KENNERLY RD
100000012	6276	2	53.641595			
100000012	6276	3	41.239448			
100000012	6276	4	54.515953			
100000012	6276	5	48.092748			
100000012	6276	6	49.649831			
100000012	6276	7	44.061325			
100000012	6276	8	42.546602			
100000012	6276	9	44.413395			
100000012	6276	10	46.335737			
100000012	6307	1	37.528138	KENNERLY RD	S	KINLEY RD, BROAD RIVER RD & KENNERLY RD
100000012	6307	2	81.851478			
100000012	6307	3	136.16824			
100000012	6307	4	93.515278			
100000012	6307	5	101.713841			
100000012	6307	6	106.270646			
100000012	6307	7	101.535002			
100000012	6307	8	103.432302			
100000012	6307	9	154.277672			
100000012	6307	10	122.915536			
100000012	6308	1	35.620388	BROAD RIVER RD	NW	KINLEY RD, BROAD RIVER RD & KENNERLY RD
100000012	6308	2	91.217399			
100000012	6308	3	99.368569			
100000012	6308	4	81.552734			
100000012	6308	5	84.659183			
100000012	6308	6	90.648335			
100000012	6308	7	57.739831			
100000012	6308	8	111.699739			
100000012	6308	9	56.250475			
100000012	6308	10	105.042942			
100000025	6267	1	0	PARKRIDGE DR	NW	CLUB RD & PARKRIDGE DR
100000025	6267	2	0			
100000025	6267	3	0			
100000025	6267	4	0			
100000025	6267	5	0			
100000025	6267	6	0			
100000025	6267	7	0			
100000025	6267	8	0			
100000025	6267	9	0			
100000025	6267	10	0			
100000025	6273	1	0	PARKRIDGE DR	SE	CLUB RD & PARKRIDGE DR
100000025	6273	2	0			
100000025	6273	3	0			
100000025	6273	4	0			
100000025	6273	5	0			
100000025	6273	6	0			
100000025	6273	7	0			
100000025	6273	8	0			
100000025	6273	9	0			
100000025	6273	10	0			
100000025	6304	1		CLUB RD	S	CLUB RD & PARKRIDGE DR
100000025	6304	2				
100000025	6304	3				
100000025	6304	4				
100000025	6304	5				
100000025	6304	6				
100000025	6304	7				
100000025	6304	8				
100000025	6304	9				
100000025	6304	10				
100000037	5101	1	24.975702	HARBISON BLVD	NE	BROAD RIVER RD & HARBISON BLVD
100000037	5101	2	22.322141			
100000037	5101	3	18.674801			
100000037	5101	4	21.285083			
100000037	5101	5	19.25947			
100000037	5101	6	24.750364			
100000037	5101	7	19.708985			
100000037	5101	8	22.255874			
100000037	5101	9	20.817268			
100000037	5101	10	21.599357			
100000037	6317	1	9.216188	BROAD RIVER RD	SE	BROAD RIVER RD & HARBISON BLVD
100000037	6317	2	10.539255			
100000037	6317	3	8.329348			
100000037	6317	4	10.732093			
100000037	6317	5	9.384485			
100000037	6317	6	12.020416			
100000037	6317	7	11.725522			
100000037	6317	8	10.847215			
100000037	6317	9	10.903616			
100000037	6317	10	10.295903			
100000037	6320	1	5.05291	BROAD RIVER RD	NW	BROAD RIVER RD & HARBISON BLVD
100000037	6320	2	5.247905			
100000037	6320	3	5.398214			
100000037	6320	4	5.516422			
100000037	6320	5	5.401354			
100000037	6320	6	12.211305			
100000037	6320	7	5.928619			
100000037	6320	8	6.264443			
100000037	6320	9	5.587672			
100000037	6320	10	5.661426			

Node	Superlink	Run	Average Control Delay	Approach Street Name	Direction	Intersection
100000038	6232	1	0	BROAD RIVER RD	NW	BROAD RIVER RD & 6311 (S)
100000038	6232	2	0			
100000038	6232	3	0			
100000038	6232	4	0			
100000038	6232	5	0			
100000038	6232	6	0			
100000038	6232	7	0			
100000038	6232	8	0			
100000038	6232	9	0			
100000038	6232	10	0			
100000038	6311	1	19.337475		N	BROAD RIVER RD & 6311 (S)
100000038	6311	2	9.334062			
100000038	6311	3	6.112635			
100000038	6311	4	12.491357			
100000038	6311	5	6.221417			
100000038	6311	6	10.497292			
100000038	6311	7	10.790799			
100000038	6311	8	3.458093			
100000038	6311	9	8.411087			
100000038	6311	10	7.412252			
100000038	6312	1	0	BROAD RIVER RD	SE	BROAD RIVER RD & 6311 (S)
100000038	6312	2	0.003427			
100000038	6312	3	0.004545			
100000038	6312	4	0.010169			
100000038	6312	5	0			
100000038	6312	6	0.005865			
100000038	6312	7	0.001667			
100000038	6312	8	0.005585			
100000038	6312	9	0			
100000038	6312	10	0			
100000041	6281	1	0	LAKE MURRAY BLVD	W	LAKE MURRAY BLVD & 6311 (N)
100000041	6281	2	0.037603			
100000041	6281	3	0.006639			
100000041	6281	4	0.019949			
100000041	6281	5	0			
100000041	6281	6	0.735889			
100000041	6281	7	0.0019			
100000041	6281	8	0			
100000041	6281	9	0			
100000041	6281	10	0			
100000041	6311	1			SW	LAKE MURRAY BLVD & 6311 (N)
100000041	6311	2				
100000041	6311	3				
100000041	6311	4	18.783485			
100000041	6311	5				
100000041	6311	6				
100000041	6311	7				
100000041	6311	8				
100000041	6311	9				
100000041	6311	10				
100000041	6313	1	0.060616	LAKE MURRAY BLVD	E	LAKE MURRAY BLVD & 6311 (N)
100000041	6313	2	0.36162			
100000041	6313	3	0.038853			
100000041	6313	4	0.090596			
100000041	6313	5	0.188793			
100000041	6313	6	0.276515			
100000041	6313	7	0.228532			
100000041	6313	8	0.13333			
100000041	6313	9	0.129404			
100000041	6313	10	0.274508			
100000046	5511	1	77.542422	BUSH RIVER RD	E	BUSH RIVER RD, BROAD RIVER RD & ELM ABODE TER
100000046	5511	2	66.490606			
100000046	5511	3	85.718669			
100000046	5511	4	54.368294			
100000046	5511	5	55.502243			
100000046	5511	6	75.709376			
100000046	5511	7	70.800528			
100000046	5511	8	87.916318			
100000046	5511	9	73.72612			
100000046	5511	10	47.807201			
100000046	6323	1	91.519775	BROAD RIVER RD	NW	BUSH RIVER RD, BROAD RIVER RD & ELM ABODE TER
100000046	6323	2	87.214255			
100000046	6323	3	77.961326			
100000046	6323	4	30.234358			
100000046	6323	5	74.617175			
100000046	6323	6	37.968116			
100000046	6323	7	93.467358			
100000046	6323	8	75.976764			
100000046	6323	9	69.954779			
100000046	6323	10	43.33705			
100000046	6324	1	99.726563	ELM ABODE TER	SW	BUSH RIVER RD, BROAD RIVER RD & ELM ABODE TER
100000046	6324	2	89.999296			
100000046	6324	3	84.326289			
100000046	6324	4	80.727345			
100000046	6324	5	160.269189			
100000046	6324	6	62.991048			
100000046	6324	7	75.505592			
100000046	6324	8	62.819101			
100000046	6324	9	53.434908			
100000046	6324	10	121.338923			
100000046	6518	1	33.182434	BROAD RIVER RD	SE	BUSH RIVER RD, BROAD RIVER RD & ELM ABODE TER
100000046	6518	2	35.586323			
100000046	6518	3	36.658243			
100000046	6518	4	35.689553			
100000046	6518	5	40.232309			
100000046	6518	6	35.55433			
100000046	6518	7	31.730771			
100000046	6518	8	29.241537			
100000046	6518	9	45.198134			
100000046	6518	10	37.813398			
100000049	6318	1	24.386802	LOST CREEK DR	S	LOST CREEK DR, BROAD RIVER RD & PINEY WOODS RD
100000049	6318	2	25.61083			
100000049	6318	3	23.784662			
100000049	6318	4	23.072507			
100000049	6318	5	23.894055			
100000049	6318	6	24.610026			
100000049	6318	7	23.304556			
100000049	6318	8	25.480734			
100000049	6318	9	21.053574			
100000049	6318	10	26.829837			
100000049	6319	1	20.86838	PINEY WOODS RD	N	LOST CREEK DR, BROAD RIVER RD & PINEY WOODS RD
100000049	6319	2	22.59725			

Node	Superlink	Run	Average Control Delay	Approach Street Name	Direction	Intersection
100000049	6319	3	22.376917			
100000049	6319	4	22.493455			
100000049	6319	5	25.067741			
100000049	6319	6	22.231443			
100000049	6319	7	25.464006			
100000049	6319	8	25.81553			
100000049	6319	9	20.661994			
100000049	6319	10	23.840463			
100000049	6320	1	12.041079	BROAD RIVER RD	SE	LOST CREEK DR, BROAD RIVER RD & PINEY WOODS RD
100000049	6320	2	15.189398			
100000049	6320	3	9.243583			
100000049	6320	4	17.735609			
100000049	6320	5	14.85271			
100000049	6320	6	13.927634			
100000049	6320	7	12.163545			
100000049	6320	8	10.047371			
100000049	6320	9	15.993869			
100000049	6320	10	14.613512			
100000049	6322	1	7.127136	BROAD RIVER RD	NW	LOST CREEK DR, BROAD RIVER RD & PINEY WOODS RD
100000049	6322	2	9.83579			
100000049	6322	3	8.605947			
100000049	6322	4	9.252243			
100000049	6322	5	10.99132			
100000049	6322	6	8.965846			
100000049	6322	7	8.293993			
100000049	6322	8	9.590722			
100000049	6322	9	9.350423			
100000049	6322	10	8.989614			
100000068	6321	1	17.436794	PINEY GROVE RD	E	BROAD RIVER RD & PINEY GROVE RD
100000068	6321	2	16.796044			
100000068	6321	3	18.369756			
100000068	6321	4	18.32827			
100000068	6321	5	16.129478			
100000068	6321	6	18.851661			
100000068	6321	7	17.188665			
100000068	6321	8	18.258849			
100000068	6321	9	16.471406			
100000068	6321	10	16.479598			
100000068	6322	1	2.045794	BROAD RIVER RD	SE	BROAD RIVER RD & PINEY GROVE RD
100000068	6322	2	2.825655			
100000068	6322	3	2.616391			
100000068	6322	4	2.778181			
100000068	6322	5	1.702285			
100000068	6322	6	1.81522			
100000068	6322	7	1.302289			
100000068	6322	8	1.798653			
100000068	6322	9	1.965836			
100000068	6322	10	1.941085			
100000068	6357	1	3.063594	BROAD RIVER RD	NW	BROAD RIVER RD & PINEY GROVE RD
100000068	6357	2	3.991123			
100000068	6357	3	3.239382			
100000068	6357	4	2.76388			
100000068	6357	5	4.122393			
100000068	6357	6	3.281375			
100000068	6357	7	2.544364			
100000068	6357	8	3.366165			
100000068	6357	9	3.335959			
100000068	6357	10	2.538459			
100000085	6325	1	0.121995	BROAD RIVER RD	E	BROAD RIVER RD, RIVERHILL CIR & RT
100000085	6325	2	0.089106			
100000085	6325	3	0.106646			
100000085	6325	4	0.076256			
100000085	6325	5	0.162408			
100000085	6325	6	0.096045			
100000085	6325	7	0.090906			
100000085	6325	8	0.165302			
100000085	6325	9	0.082307			
100000085	6325	10	0.099667			
100000085	6329	1	4.253146	RT	E	BROAD RIVER RD, RIVERHILL CIR & RT
100000085	6329	2	4.065518			
100000085	6329	3	3.719638			
100000085	6329	4	4.135828			
100000085	6329	5	3.783994			
100000085	6329	6	4.108101			
100000085	6329	7	3.481939			
100000085	6329	8	5.164123			
100000085	6329	9	4.175616			
100000085	6329	10	4.732218			
100000085	6330	1	4.049441	BROAD RIVER RD	W	BROAD RIVER RD, RIVERHILL CIR & RT
100000085	6330	2	9.632386			
100000085	6330	3	5.857083			
100000085	6330	4	4.876			
100000085	6330	5	5.607557			
100000085	6330	6	6.949703			
100000085	6330	7	8.586461			
100000085	6330	8	4.282661			
100000085	6330	9	4.482105			
100000085	6330	10	4.804486			
100000085	6331	1	13.947728	RIVERHILL CIR	W	BROAD RIVER RD, RIVERHILL CIR & RT
100000085	6331	2	15.70359			
100000085	6331	3	14.035262			
100000085	6331	4	12.380695			
100000085	6331	5	15.038005			
100000085	6331	6	18.708318			
100000085	6331	7	15.925032			
100000085	6331	8	12.635225			
100000085	6331	9	10.017757			
100000085	6331	10	11.472937			
100000093	4299	1	51.850933	RAMP	SW	SUNSET BLVD & RAMP
100000093	4299	2	57.073616			
100000093	4299	3	51.959546			
100000093	4299	4	52.611909			
100000093	4299	5	51.937759			
100000093	4299	6	51.78408			
100000093	4299	7	57.715934			
100000093	4299	8	52.323138			
100000093	4299	9	51.488502			
100000093	4299	10	52.855818			
100000093	4949	1	28.593742	SUNSET BLVD	E	SUNSET BLVD & RAMP
100000093	4949	2	33.432333			
100000093	4949	3	34.760791			
100000093	4949	4	38.703178			

Node	Superlink	Run	Average Control Delay	Approach Street Name	Direction	Intersection
100000093	4949	5	34.58654			
100000093	4949	6	32.968771			
100000093	4949	7	35.633413			
100000093	4949	8	37.938144			
100000093	4949	9	38.013911			
100000093	4949	10	36.692985			
100000093	4950	1	0.191091	SUNSET BLVD	W	SUNSET BLVD & RAMP
100000093	4950	2	0.15533			
100000093	4950	3	0.091051			
100000093	4950	4	0.125973			
100000093	4950	5	0.052402			
100000093	4950	6	0.125038			
100000093	4950	7	0.123082			
100000093	4950	8	0.098293			
100000093	4950	9	0.087947			
100000093	4950	10	0.208003			
100000120	5031	1	9.208789	SUNSET BLVD	W	CORLEY MILL RD, SUNSET BLVD & GINNY LN
100000120	5031	2	8.788304			
100000120	5031	3	8.757867			
100000120	5031	4	9.209688			
100000120	5031	5	9.125887			
100000120	5031	6	9.86484			
100000120	5031	7	9.390151			
100000120	5031	8	8.781197			
100000120	5031	9	8.94935			
100000120	5031	10	9.718955			
100000120	5352	1	14.913957	CORLEY MILL RD	S	CORLEY MILL RD, SUNSET BLVD & GINNY LN
100000120	5352	2	14.191869			
100000120	5352	3	13.741563			
100000120	5352	4	14.207093			
100000120	5352	5	14.022029			
100000120	5352	6	13.943988			
100000120	5352	7	13.69461			
100000120	5352	8	14.372509			
100000120	5352	9	13.406544			
100000120	5352	10	14.353581			
100000120	5353	1	34.921715	GINNY LN	N	CORLEY MILL RD, SUNSET BLVD & GINNY LN
100000120	5353	2	39.293372			
100000120	5353	3	35.514754			
100000120	5353	4	34.023144			
100000120	5353	5	41.412343			
100000120	5353	6	30.873086			
100000120	5353	7	33.176141			
100000120	5353	8	33.050581			
100000120	5353	9	32.917836			
100000120	5353	10	37.298378			
100000120	5355	1	28.941985	SUNSET BLVD	E	CORLEY MILL RD, SUNSET BLVD & GINNY LN
100000120	5355	2	32.484061			
100000120	5355	3	28.841675			
100000120	5355	4	30.826894			
100000120	5355	5	30.301401			
100000120	5355	6	30.091243			
100000120	5355	7	31.390904			
100000120	5355	8	28.728745			
100000120	5355	9	29.698258			
100000120	5355	10	33.087562			
100000134	2048	1	23.463003	RAMP	SW	SUNSET BLVD & RAMP
100000134	2048	2	22.773041			
100000134	2048	3	21.404796			
100000134	2048	4	22.43772			
100000134	2048	5	20.840285			
100000134	2048	6	22.65623			
100000134	2048	7	23.511966			
100000134	2048	8	23.772357			
100000134	2048	9	23.205255			
100000134	2048	10	22.804558			
100000134	5027	1	6.626973	SUNSET BLVD	NW	SUNSET BLVD & RAMP
100000134	5027	2	5.433927			
100000134	5027	3	7.135615			
100000134	5027	4	7.087149			
100000134	5027	5	5.966027			
100000134	5027	6	6.241781			
100000134	5027	7	4.895853			
100000134	5027	8	5.652461			
100000134	5027	9	6.309017			
100000134	5027	10	6.802806			
100000134	5030	1	4.290897	SUNSET BLVD	SE	SUNSET BLVD & RAMP
100000134	5030	2	4.799644			
100000134	5030	3	5.160486			
100000134	5030	4	5.022245			
100000134	5030	5	4.931049			
100000134	5030	6	4.65277			
100000134	5030	7	4.710022			
100000134	5030	8	4.889698			
100000134	5030	9	5.090002			
100000134	5030	10	5.077119			
100000135	2039	1	10.642482	I-20 EB OFF-RAMP	NE	SUNSET BLVD & I-20 EB OFF-RAMP
100000135	2039	2	10.607467			
100000135	2039	3	10.971726			
100000135	2039	4	11.110682			
100000135	2039	5	11.532326			
100000135	2039	6	12.988392			
100000135	2039	7	11.651362			
100000135	2039	8	11.45954			
100000135	2039	9	12.464511			
100000135	2039	10	10.1231			
100000135	5022	1	3.729022	SUNSET BLVD	SE	SUNSET BLVD & I-20 EB OFF-RAMP
100000135	5022	2	3.540949			
100000135	5022	3	3.595898			
100000135	5022	4	3.571382			
100000135	5022	5	4.62313			
100000135	5022	6	4.294809			
100000135	5022	7	3.807931			
100000135	5022	8	3.269176			
100000135	5022	9	4.176783			
100000135	5022	10	3.604843			
100000135	5023	1	3.830156	SUNSET BLVD	NW	SUNSET BLVD & I-20 EB OFF-RAMP
100000135	5023	2	4.132863			
100000135	5023	3	3.806933			
100000135	5023	4	3.879014			
100000135	5023	5	4.492947			
100000135	5023	6	4.981802			

Node	Superlink	Run	Average Control Delay	Approach Street Name	Direction	Intersection
100000135	5023	7	4.21619			
100000135	5023	8	3.747862			
100000135	5023	9	4.393439			
100000135	5023	10	4.132954			
100000136	5021	1	17.534165	SUNSET BLVD	SE	SUNSET BLVD, CROMER RD & DAVEGA DR
100000136	5021	2	18.081674			
100000136	5021	3	19.836188			
100000136	5021	4	19.879316			
100000136	5021	5	17.471767			
100000136	5021	6	18.788021			
100000136	5021	7	19.901195			
100000136	5021	8	19.205809			
100000136	5021	9	19.906794			
100000136	5021	10	16.729753			
100000136	5362	1	27.218749	CROMER RD	NE	SUNSET BLVD, CROMER RD & DAVEGA DR
100000136	5362	2	27.43458			
100000136	5362	3	27.660709			
100000136	5362	4	29.808314			
100000136	5362	5	30.464406			
100000136	5362	6	29.299853			
100000136	5362	7	29.313849			
100000136	5362	8	29.751591			
100000136	5362	9	31.757106			
100000136	5362	10	30.753359			
100000136	5364	1	78.828322	SUNSET BLVD	NW	SUNSET BLVD, CROMER RD & DAVEGA DR
100000136	5364	2	90.731466			
100000136	5364	3	77.382726			
100000136	5364	4	89.592284			
100000136	5364	5	88.901864			
100000136	5364	6	92.488708			
100000136	5364	7	89.948391			
100000136	5364	8	88.523555			
100000136	5364	9	80.837638			
100000136	5364	10	84.560631			
100000136	6459	1	22.719301	DAVEGA DR	SW	SUNSET BLVD, CROMER RD & DAVEGA DR
100000136	6459	2	24.299833			
100000136	6459	3	26.679699			
100000136	6459	4	23.366231			
100000136	6459	5	25.117215			
100000136	6459	6	23.930409			
100000136	6459	7	24.912668			
100000136	6459	8	22.590092			
100000136	6459	9	24.300181			
100000136	6459	10	27.856073			
100000138	2052	1	0	RAMP	NW	RAMP, SUNSET BLVD & I-20 EXIT 61 WB ON RAMP
100000138	2052	2	0			
100000138	2052	3	0			
100000138	2052	4	0			
100000138	2052	5	0			
100000138	2052	6	0			
100000138	2052	7	0			
100000138	2052	8	0			
100000138	2052	9	0			
100000138	2052	10	0			
100000138	5030	1	0	SUNSET BLVD	NW	RAMP, SUNSET BLVD & I-20 EXIT 61 WB ON RAMP
100000138	5030	2	0			
100000138	5030	3	0			
100000138	5030	4	0			
100000138	5030	5	0			
100000138	5030	6	0			
100000138	5030	7	0			
100000138	5030	8	0			
100000138	5030	9	0			
100000138	5030	10	0			
100000138	6553	1	4.127313	SUNSET BLVD	SE	RAMP, SUNSET BLVD & I-20 EXIT 61 WB ON RAMP
100000138	6553	2	5.199538			
100000138	6553	3	5.610676			
100000138	6553	4	5.122306			
100000138	6553	5	4.7651			
100000138	6553	6	4.972315			
100000138	6553	7	4.43457			
100000138	6553	8	5.268406			
100000138	6553	9	5.701508			
100000138	6553	10	5.568192			
100000139	2065	1	28.000306	RAMP	S	RAMP & BUSH RIVER RD
100000139	2065	2	27.036902			
100000139	2065	3	26.069295			
100000139	2065	4	28.457887			
100000139	2065	5	23.109255			
100000139	2065	6	25.007131			
100000139	2065	7	22.630052			
100000139	2065	8	22.416276			
100000139	2065	9	24.590864			
100000139	2065	10	24.68154			
100000139	5033	1	5.176931	BUSH RIVER RD	NW	RAMP & BUSH RIVER RD
100000139	5033	2	4.549673			
100000139	5033	3	4.762133			
100000139	5033	4	5.928422			
100000139	5033	5	4.896998			
100000139	5033	6	4.327245			
100000139	5033	7	4.992489			
100000139	5033	8	4.007361			
100000139	5033	9	4.749057			
100000139	5033	10	5.108223			
100000139	5034	1	6.168335	BUSH RIVER RD	SE	RAMP & BUSH RIVER RD
100000139	5034	2	6.05127			
100000139	5034	3	6.048844			
100000139	5034	4	5.658916			
100000139	5034	5	6.793748			
100000139	5034	6	6.306492			
100000139	5034	7	6.016888			
100000139	5034	8	5.909928			
100000139	5034	9	6.220486			
100000139	5034	10	6.124181			
100000140	5376	1	4.193444	SUNSET BLVD	W	SUMMER PLACE DR, SUNSET BLVD & FAIRLANE DR
100000140	5376	2	4.1268			
100000140	5376	3	4.93493			
100000140	5376	4	6.605225			
100000140	5376	5	3.584026			
100000140	5376	6	3.089073			
100000140	5376	7	3.727523			
100000140	5376	8	6.700674			

Node	Superlink	Run	Average Control Delay	Approach Street Name	Direction	Intersection
100000140	5376	9	3.857914			
100000140	5376	10	2.979738			
100000140	5378	1	40.174052	SUMMER PLACE DR	N	SUMMER PLACE DR, SUNSET BLVD & FAIRLANE DR
100000140	5378	2	33.635265			
100000140	5378	3	37.31805			
100000140	5378	4	38.733213			
100000140	5378	5	36.809248			
100000140	5378	6	35.529796			
100000140	5378	7	38.349997			
100000140	5378	8	40.613359			
100000140	5378	9	36.843193			
100000140	5378	10	35.265207			
100000140	6489	1		FAIRLANE DR	S	SUMMER PLACE DR, SUNSET BLVD & FAIRLANE DR
100000140	6489	2				
100000140	6489	3				
100000140	6489	4				
100000140	6489	5				
100000140	6489	6				
100000140	6489	7				
100000140	6489	8				
100000140	6489	9				
100000140	6489	10				
100000140	6764	1	5.129883	SUNSET BLVD	E	SUMMER PLACE DR, SUNSET BLVD & FAIRLANE DR
100000140	6764	2	5.291851			
100000140	6764	3	6.176335			
100000140	6764	4	4.998063			
100000140	6764	5	4.8728			
100000140	6764	6	4.760395			
100000140	6764	7	5.314791			
100000140	6764	8	5.104518			
100000140	6764	9	5.012516			
100000140	6764	10	4.745966			
100000142	2053	1	11.766385	RAMP	NE	BUSH RIVER RD & RAMP
100000142	2053	2	10.966819			
100000142	2053	3	9.64797			
100000142	2053	4	11.157578			
100000142	2053	5	9.083495			
100000142	2053	6	11.885311			
100000142	2053	7	11.430365			
100000142	2053	8	9.312782			
100000142	2053	9	10.260485			
100000142	2053	10	10.519428			
100000142	5036	1	11.37856	BUSH RIVER RD	SE	BUSH RIVER RD & RAMP
100000142	5036	2	12.012456			
100000142	5036	3	13.564212			
100000142	5036	4	11.447228			
100000142	5036	5	13.849129			
100000142	5036	6	12.49332			
100000142	5036	7	11.096949			
100000142	5036	8	13.827534			
100000142	5036	9	12.930406			
100000142	5036	10	11.405926			
100000142	5037	1	5.126983	BUSH RIVER RD	NW	BUSH RIVER RD & RAMP
100000142	5037	2	5.461812			
100000142	5037	3	5.444869			
100000142	5037	4	4.813564			
100000142	5037	5	6.045885			
100000142	5037	6	5.193446			
100000142	5037	7	4.859867			
100000142	5037	8	5.732697			
100000142	5037	9	5.321601			
100000142	5037	10	4.739224			
100000143	5372	1	0	SUNSET BLVD	E	SUNSET BLVD & HEBRON DR
100000143	5372	2	0			
100000143	5372	3	0			
100000143	5372	4	0			
100000143	5372	5	0			
100000143	5372	6	0			
100000143	5372	7	0			
100000143	5372	8	0			
100000143	5372	9	0			
100000143	5372	10	0			
100000143	6763	1		HEBRON DR	N	SUNSET BLVD & HEBRON DR
100000143	6763	2				
100000143	6763	3				
100000143	6763	4				
100000143	6763	5				
100000143	6763	6				
100000143	6763	7				
100000143	6763	8				
100000143	6763	9				
100000143	6763	10				
100000143	6764	1	0	SUNSET BLVD	W	SUNSET BLVD & HEBRON DR
100000143	6764	2	0			
100000143	6764	3	0			
100000143	6764	4	0			
100000143	6764	5	0			
100000143	6764	6	0			
100000143	6764	7	0			
100000143	6764	8	0			
100000143	6764	9	0			
100000143	6764	10	0			
100000144	5376	1	9.215305	SUNSET BLVD	E	SUNSET BLVD, W. HOSPTIAL DR & SUNSET CT
100000144	5376	2	10.402239			
100000144	5376	3	9.670768			
100000144	5376	4	9.04982			
100000144	5376	5	10.067212			
100000144	5376	6	11.871584			
100000144	5376	7	11.948457			
100000144	5376	8	10.694437			
100000144	5376	9	8.280552			
100000144	5376	10	11.104505			
100000144	6760	1	60.467865	W. HOSPTIAL DR	S	SUNSET BLVD, W. HOSPTIAL DR & SUNSET CT
100000144	6760	2	68.123478			
100000144	6760	3	58.68913			
100000144	6760	4	56.948225			
100000144	6760	5	50.25436			
100000144	6760	6	57.23545			
100000144	6760	7	61.836971			
100000144	6760	8	56.02983			
100000144	6760	9	51.655208			
100000144	6760	10	64.54224			

Node	Superlink	Run	Average Control Delay	Approach Street Name	Direction	Intersection
100000144	6761	1		SUNSET CT	N	SUNSET BLVD, W. HOSPTIAL DR & SUNSET CT
100000144	6761	2				
100000144	6761	3				
100000144	6761	4				
100000144	6761	5				
100000144	6761	6				
100000144	6761	7				
100000144	6761	8				
100000144	6761	9				
100000144	6761	10				
100000144	6762	1	9.721619	SUNSET BLVD	W	SUNSET BLVD, W. HOSPTIAL DR & SUNSET CT
100000144	6762	2	9.842754			
100000144	6762	3	10.659471			
100000144	6762	4	10.506738			
100000144	6762	5	11.19394			
100000144	6762	6	9.097589			
100000144	6762	7	10.185542			
100000144	6762	8	8.944825			
100000144	6762	9	9.922236			
100000144	6762	10	9.18764			
100000150	3361	1	17.837135	I-26 EXIT 101 EB OFF RAMP	SW	I-26 EXIT 101 EB OFF RAMP & BROAD RIVER RD
100000150	3361	2	13.909552			
100000150	3361	3	13.166991			
100000150	3361	4	16.464015			
100000150	3361	5	17.125548			
100000150	3361	6	23.834711			
100000150	3361	7	17.046154			
100000150	3361	8	14.295034			
100000150	3361	9	15.257587			
100000150	3361	10	14.987627			
100000150	5071	1	0	BROAD RIVER RD	E	I-26 EXIT 101 EB OFF RAMP & BROAD RIVER RD
100000150	5071	2	0			
100000150	5071	3	0			
100000150	5071	4	0			
100000150	5071	5	0			
100000150	5071	6	0			
100000150	5071	7	0			
100000150	5071	8	0			
100000150	5071	9	0			
100000150	5071	10	0			
100000150	5073	1	0.075646	BROAD RIVER RD	W	I-26 EXIT 101 EB OFF RAMP & BROAD RIVER RD
100000150	5073	2	0.069208			
100000150	5073	3	0.075487			
100000150	5073	4	0.068191			
100000150	5073	5	0.063017			
100000150	5073	6	0.065282			
100000150	5073	7	0.060697			
100000150	5073	8	0.089244			
100000150	5073	9	0.08632			
100000150	5073	10	0.071608			
100000151	5072	1	1.358092	BROAD RIVER RD	E	BROAD RIVER RD & ON-RAMP from WB
100000151	5072	2	2.265061			
100000151	5072	3	2.458167			
100000151	5072	4	2.040028			
100000151	5072	5	1.640884			
100000151	5072	6	1.996026			
100000151	5072	7	1.96625			
100000151	5072	8	1.543348			
100000151	5072	9	2.042873			
100000151	5072	10	2.237601			
100000151	5075	1	1.272481	BROAD RIVER RD	W	BROAD RIVER RD & ON-RAMP from WB
100000151	5075	2	1.311891			
100000151	5075	3	1.830721			
100000151	5075	4	1.234071			
100000151	5075	5	1.341093			
100000151	5075	6	1.336401			
100000151	5075	7	1.328967			
100000151	5075	8	1.355249			
100000151	5075	9	1.479295			
100000151	5075	10	1.253224			
100000155	6084	1	4.688187	BROAD RIVER RD	N	BEATTY RD & BROAD RIVER RD
100000155	6084	2	4.085474			
100000155	6084	3	4.640462			
100000155	6084	4	5.220302			
100000155	6084	5	4.233984			
100000155	6084	6	4.406239			
100000155	6084	7	4.127441			
100000155	6084	8	4.377153			
100000155	6084	9	4.176843			
100000155	6084	10	4.059717			
100000155	6355	1	24.057964	BEATTY RD	E	BEATTY RD & BROAD RIVER RD
100000155	6355	2	20.384557			
100000155	6355	3	30.904026			
100000155	6355	4	35.252345			
100000155	6355	5	25.278909			
100000155	6355	6	29.206066			
100000155	6355	7	28.461986			
100000155	6355	8	27.406086			
100000155	6355	9	31.525006			
100000155	6355	10	24.98014			
100000155	6357	1	11.060897	BROAD RIVER RD	S	BEATTY RD & BROAD RIVER RD
100000155	6357	2	9.162273			
100000155	6357	3	11.549049			
100000155	6357	4	10.665728			
100000155	6357	5	8.620324			
100000155	6357	6	9.854417			
100000155	6357	7	12.33952			
100000155	6357	8	11.731848			
100000155	6357	9	9.996138			
100000155	6357	10	10.690782			
100000163	4947	1	4.663587	SUNSET BLVD	E	MCSWAIN DR, SUNSET BLVD & CHRIS DR
100000163	4947	2	4.401247			
100000163	4947	3	3.987252			
100000163	4947	4	4.214276			
100000163	4947	5	3.749525			
100000163	4947	6	3.776933			
100000163	4947	7	4.85254			
100000163	4947	8	4.420575			
100000163	4947	9	4.223234			
100000163	4947	10	3.400477			
100000163	5388	1	7.235411	SUNSET BLVD	W	MCSWAIN DR, SUNSET BLVD & CHRIS DR
100000163	5388	2	6.814116			

Node	Superlink	Run	Average Control Delay	Approach Street Name	Direction	Intersection
100000163	5388	3	6.674849			
100000163	5388	4	6.280277			
100000163	5388	5	5.798161			
100000163	5388	6	6.679964			
100000163	5388	7	6.946307			
100000163	5388	8	6.467475			
100000163	5388	9	5.832623			
100000163	5388	10	5.824853			
100000163	5389	1	23.825658	MCSWAIN DR	S	MCSWAIN DR, SUNSET BLVD & CHRIS DR
100000163	5389	2	23.424775			
100000163	5389	3	22.059584			
100000163	5389	4	24.462577			
100000163	5389	5	23.166694			
100000163	5389	6	26.249967			
100000163	5389	7	27.201481			
100000163	5389	8	23.557952			
100000163	5389	9	24.90485			
100000163	5389	10	19.608384			
100000163	5418	1	64.117112	CHRIS DR	N	MCSWAIN DR, SUNSET BLVD & CHRIS DR
100000163	5418	2	69.869684			
100000163	5418	3	64.135145			
100000163	5418	4	61.741668			
100000163	5418	5	68.120776			
100000163	5418	6	60.648676			
100000163	5418	7	60.907777			
100000163	5418	8	58.811853			
100000163	5418	9	59.282849			
100000163	5418	10	59.318672			
100000164	3354	1	0	I-26 EXIT 102 EB OFF RAMP	W	LAKE MURRAY BLVD & I-26 EXIT 102 EB OFF RAMP
100000164	3354	2	0			
100000164	3354	3	0			
100000164	3354	4	0			
100000164	3354	5	0			
100000164	3354	6	0			
100000164	3354	7	0			
100000164	3354	8	0			
100000164	3354	9	0			
100000164	3354	10	0			
100000164	5084	1	0	LAKE MURRAY BLVD	E	LAKE MURRAY BLVD & I-26 EXIT 102 EB OFF RAMP
100000164	5084	2	0			
100000164	5084	3	0			
100000164	5084	4	0			
100000164	5084	5	0			
100000164	5084	6	0			
100000164	5084	7	0			
100000164	5084	8	0			
100000164	5084	9	0			
100000164	5084	10	0			
100000164	5085	1	0	LAKE MURRAY BLVD	W	LAKE MURRAY BLVD & I-26 EXIT 102 EB OFF RAMP
100000164	5085	2	0			
100000164	5085	3	0			
100000164	5085	4	0			
100000164	5085	5	0			
100000164	5085	6	0			
100000164	5085	7	0			
100000164	5085	8	0			
100000164	5085	9	0			
100000164	5085	10	0			
100000165	3330	1	50.552905	EXIT 103 WB OFF RAMP	SE	HARBISON BLVD, EXIT 103 WB OFF RAMP, WOODCROSS DR & EXIT 103 WB ON RAMP
100000165	3330	2	47.266352			
100000165	3330	3	50.410064			
100000165	3330	4	54.178892			
100000165	3330	5	47.992241			
100000165	3330	6	47.394325			
100000165	3330	7	45.813382			
100000165	3330	8	44.853511			
100000165	3330	9	39.576814			
100000165	3330	10	49.066097			
100000165	5096	1	13.386924	HARBISON BLVD	NE	HARBISON BLVD, EXIT 103 WB OFF RAMP, WOODCROSS DR & EXIT 103 WB ON RAMP
100000165	5096	2	12.987482			
100000165	5096	3	13.903007			
100000165	5096	4	14.311574			
100000165	5096	5	13.52017			
100000165	5096	6	16.077195			
100000165	5096	7	13.127089			
100000165	5096	8	14.191308			
100000165	5096	9	13.352518			
100000165	5096	10	14.023486			
100000165	5102	1	8.507341	HARBISON BLVD	SW	HARBISON BLVD, EXIT 103 WB OFF RAMP, WOODCROSS DR & EXIT 103 WB ON RAMP
100000165	5102	2	9.13278			
100000165	5102	3	7.386804			
100000165	5102	4	7.096761			
100000165	5102	5	6.90104			
100000165	5102	6	7.493244			
100000165	5102	7	7.404767			
100000165	5102	8	6.812409			
100000165	5102	9	7.918121			
100000165	5102	10	8.345937			
100000165	5103	1	113.834153	WOODCROSS DR	NW	HARBISON BLVD, EXIT 103 WB OFF RAMP, WOODCROSS DR & EXIT 103 WB ON RAMP
100000165	5103	2	110.641301			
100000165	5103	3	100.370354			
100000165	5103	4	122.105157			
100000165	5103	5	112.36372			
100000165	5103	6	138.646782			
100000165	5103	7	97.619861			
100000165	5103	8	129.570424			
100000165	5103	9	126.088095			
100000165	5103	10	101.330457			
100000166	3343	1	0	I-26 EXIT 102 EBL OFF RAMP	E	LAKE MURRAY BLVD & I-26 EXIT 102 EBL OFF RAMP
100000166	3343	2	0			
100000166	3343	3	0			
100000166	3343	4	0			
100000166	3343	5	0			
100000166	3343	6	0			
100000166	3343	7	0			
100000166	3343	8	0			
100000166	3343	9	0			
100000166	3343	10	0			
100000166	5087	1	0	LAKE MURRAY BLVD	E	LAKE MURRAY BLVD & I-26 EXIT 102 EBL OFF RAMP
100000166	5087	2	0			
100000166	5087	3	0			
100000166	5087	4	0			

Node	Superlink	Run	Average Control Delay	Approach Street Name	Direction	Intersection
100000166	5087	5	0			
100000166	5087	6	0			
100000166	5087	7	0			
100000166	5087	8	0			
100000166	5087	9	0			
100000166	5087	10	0			
100000166	5088	1	0	LAKE MURRAY BLVD	W	LAKE MURRAY BLVD & I-26 EXIT 102 EBL OFF RAMP
100000166	5088	2	0			
100000166	5088	3	0			
100000166	5088	4	0			
100000166	5088	5	0			
100000166	5088	6	0			
100000166	5088	7	0			
100000166	5088	8	0			
100000166	5088	9	0			
100000166	5088	10	0			
100000167	3339	1	0	I-26 EXIT 102 WBL OFF RAMP	W	I-26 EXIT 102 WBL OFF RAMP & LAKE MURRAY BLVD
100000167	3339	2	0			
100000167	3339	3	0			
100000167	3339	4	0			
100000167	3339	5	0			
100000167	3339	6	0			
100000167	3339	7	0			
100000167	3339	8	0			
100000167	3339	9	0			
100000167	3339	10	0			
100000167	5088	1	0	LAKE MURRAY BLVD	E	I-26 EXIT 102 WBL OFF RAMP & LAKE MURRAY BLVD
100000167	5088	2	0			
100000167	5088	3	0			
100000167	5088	4	0			
100000167	5088	5	0			
100000167	5088	6	0			
100000167	5088	7	0			
100000167	5088	8	0			
100000167	5088	9	0			
100000167	5088	10	0			
100000167	5090	1	0	LAKE MURRAY BLVD	W	I-26 EXIT 102 WBL OFF RAMP & LAKE MURRAY BLVD
100000167	5090	2	0			
100000167	5090	3	0			
100000167	5090	4	0			
100000167	5090	5	0			
100000167	5090	6	0			
100000167	5090	7	0			
100000167	5090	8	0			
100000167	5090	9	0			
100000167	5090	10	0			
100000168	5366	1	28.952643	LEAPHART RD	N	SUNSET BLVD & LEAPHART RD
100000168	5366	2	28.672018			
100000168	5366	3	26.094152			
100000168	5366	4	28.643885			
100000168	5366	5	35.112611			
100000168	5366	6	29.308172			
100000168	5366	7	32.898693			
100000168	5366	8	29.080206			
100000168	5366	9	27.993276			
100000168	5366	10	27.955762			
100000168	5368	1	4.743508	SUNSET BLVD	E	SUNSET BLVD & LEAPHART RD
100000168	5368	2	5.897256			
100000168	5368	3	4.943206			
100000168	5368	4	5.502223			
100000168	5368	5	4.718772			
100000168	5368	6	5.429112			
100000168	5368	7	4.201957			
100000168	5368	8	4.612372			
100000168	5368	9	5.338826			
100000168	5368	10	5.085833			
100000168	5372	1	166.333023	SUNSET BLVD	W	SUNSET BLVD & LEAPHART RD
100000168	5372	2	260.209826			
100000168	5372	3	157.007225			
100000168	5372	4	165.44334			
100000168	5372	5	186.675476			
100000168	5372	6	235.064268			
100000168	5372	7	259.012885			
100000168	5372	8	172.475861			
100000168	5372	9	156.247423			
100000168	5372	10	152.023431			
100000171	3342	1	0	I-26 EXIT 102 WB OFF RAMP	E	LAKE MURRAY BLVD & I-26 EXIT 102 WB OFF RAMP
100000171	3342	2	0			
100000171	3342	3	0			
100000171	3342	4	0			
100000171	3342	5	0			
100000171	3342	6	0			
100000171	3342	7	0			
100000171	3342	8	0			
100000171	3342	9	0			
100000171	3342	10	0			
100000171	5092	1	0.008385	LAKE MURRAY BLVD	E	LAKE MURRAY BLVD & I-26 EXIT 102 WB OFF RAMP
100000171	5092	2	0.013901			
100000171	5092	3	0.015287			
100000171	5092	4	0.011402			
100000171	5092	5	0.022184			
100000171	5092	6	0.011998			
100000171	5092	7	0.01029			
100000171	5092	8	0.012726			
100000171	5092	9	0.013361			
100000171	5092	10	0.013493			
100000171	5093	1	0	LAKE MURRAY BLVD	W	LAKE MURRAY BLVD & I-26 EXIT 102 WB OFF RAMP
100000171	5093	2	0			
100000171	5093	3	0			
100000171	5093	4	0			
100000171	5093	5	0			
100000171	5093	6	0			
100000171	5093	7	0			
100000171	5093	8	0			
100000171	5093	9	0			
100000171	5093	10	0			
100000173	3212	1	59.259891		103 SE	HARBISON BLVD, 103 & RAMP
100000173	3212	2	60.419338			
100000173	3212	3	57.910824			
100000173	3212	4	55.122705			
100000173	3212	5	57.085911			
100000173	3212	6	67.292156			

Node	Superlink	Run	Average Control Delay	Approach Street Name	Direction	Intersection
100000173	3212	7	62.246322			
100000173	3212	8	54.002458			
100000173	3212	9	58.308919			
100000173	3212	10	55.533471			
100000173	3213	1	11.318052	103	S	HARBISON BLVD, 103 & RAMP
100000173	3213	2	11.384582			
100000173	3213	3	13.972025			
100000173	3213	4	14.857586			
100000173	3213	5	11.34943			
100000173	3213	6	12.676251			
100000173	3213	7	13.333537			
100000173	3213	8	11.302747			
100000173	3213	9	12.815434			
100000173	3213	10	12.913481			
100000173	5097	1	2.968892	HARBISON BLVD	NE	HARBISON BLVD, 103 & RAMP
100000173	5097	2	2.947197			
100000173	5097	3	2.477099			
100000173	5097	4	3.385537			
100000173	5097	5	2.860154			
100000173	5097	6	2.921532			
100000173	5097	7	3.197584			
100000173	5097	8	2.542861			
100000173	5097	9	3.292717			
100000173	5097	10	3.144401			
100000173	5099	1	7.610471	HARBISON BLVD	SW	HARBISON BLVD, 103 & RAMP
100000173	5099	2	7.547555			
100000173	5099	3	7.288197			
100000173	5099	4	7.054546			
100000173	5099	5	7.878173			
100000173	5099	6	6.642417			
100000173	5099	7	7.508997			
100000173	5099	8	7.525734			
100000173	5099	9	6.845446			
100000173	5099	10	7.768576			
100000175	3234	1	64.226016	RAMP	SE	PINEY GROVE RD & RAMP
100000175	3234	2	65.228192			
100000175	3234	3	59.426375			
100000175	3234	4	56.173147			
100000175	3234	5	67.459776			
100000175	3234	6	65.833119			
100000175	3234	7	70.724981			
100000175	3234	8	56.416549			
100000175	3234	9	73.308629			
100000175	3234	10	61.151284			
100000175	5112	1	1.629572	PINEY GROVE RD	W	PINEY GROVE RD & RAMP
100000175	5112	2	1.321776			
100000175	5112	3	1.104101			
100000175	5112	4	1.180128			
100000175	5112	5	1.433918			
100000175	5112	6	1.483891			
100000175	5112	7	1.45105			
100000175	5112	8	0.985707			
100000175	5112	9	1.168871			
100000175	5112	10	1.565119			
100000175	6544	1	3.636888	PINEY GROVE RD	E	PINEY GROVE RD & RAMP
100000175	6544	2	3.26457			
100000175	6544	3	3.498878			
100000175	6544	4	3.312299			
100000175	6544	5	3.625586			
100000175	6544	6	2.977196			
100000175	6544	7	3.620729			
100000175	6544	8	3.138094			
100000175	6544	9	2.980047			
100000175	6544	10	3.59841			
100000177	5112	1	8.509866	PINEY GROVE RD	E	PINEY GROVE RD, EXIT 104 WB OFF RAMP & EXIT 104 WB ON RAMP
100000177	5112	2	9.237273			
100000177	5112	3	8.53847			
100000177	5112	4	11.162622			
100000177	5112	5	10.941126			
100000177	5112	6	8.282014			
100000177	5112	7	9.943272			
100000177	5112	8	9.656514			
100000177	5112	9	10.88343			
100000177	5112	10	9.316575			
100000177	5113	1	11.245271	PINEY GROVE RD	W	PINEY GROVE RD, EXIT 104 WB OFF RAMP & EXIT 104 WB ON RAMP
100000177	5113	2	12.333281			
100000177	5113	3	11.554285			
100000177	5113	4	12.338411			
100000177	5113	5	10.598659			
100000177	5113	6	10.822704			
100000177	5113	7	11.635049			
100000177	5113	8	11.140518			
100000177	5113	9	11.312037			
100000177	5113	10	11.026534			
100000177	6513	1	5.961565	EXIT 104 WB OFF RAMP	N	PINEY GROVE RD, EXIT 104 WB OFF RAMP & EXIT 104 WB ON RAMP
100000177	6513	2	5.384479			
100000177	6513	3	6.099735			
100000177	6513	4	5.894695			
100000177	6513	5	6.003638			
100000177	6513	6	6.235908			
100000177	6513	7	6.084956			
100000177	6513	8	6.309259			
100000177	6513	9	5.573565			
100000177	6513	10	5.912541			
100000177	6514	1	27.056066	EXIT 104 WB OFF RAMP	N	PINEY GROVE RD, EXIT 104 WB OFF RAMP & EXIT 104 WB ON RAMP
100000177	6514	2	25.852869			
100000177	6514	3	25.093463			
100000177	6514	4	27.910737			
100000177	6514	5	29.835111			
100000177	6514	6	30.886797			
100000177	6514	7	30.682256			
100000177	6514	8	27.052676			
100000177	6514	9	29.383531			
100000177	6514	10	28.176204			
100000178	3301	1	22.276372	RAMP	SE	ST ANDREWS RD, RAMP, WOODLAND HILLS RD & I-26 EXIT 106 EB ON RAMP
100000178	3301	2	26.266952			
100000178	3301	3	25.278677			
100000178	3301	4	23.681194			
100000178	3301	5	24.758064			
100000178	3301	6	25.514169			
100000178	3301	7	23.918592			
100000178	3301	8	24.403523			

Node	Superlink	Run	Average Control Delay	Approach Street Name	Direction	Intersection
100000178	3301	9	25.561994			
100000178	3301	10	24.672333			
100000178	5118	1	6.228581	ST ANDREWS RD	E	ST ANDREWS RD, RAMP, WOODLAND HILLS RD & I-26 EXIT 106 EB ON RAMP
100000178	5118	2	6.035811			
100000178	5118	3	6.0269			
100000178	5118	4	5.648393			
100000178	5118	5	6.163729			
100000178	5118	6	5.906761			
100000178	5118	7	5.83371			
100000178	5118	8	6.013057			
100000178	5118	9	5.726965			
100000178	5118	10	5.959349			
100000178	5119	1	23.210175	WOODLAND HILLS RD	N	ST ANDREWS RD, RAMP, WOODLAND HILLS RD & I-26 EXIT 106 EB ON RAMP
100000178	5119	2	22.612226			
100000178	5119	3	21.394888			
100000178	5119	4	23.339984			
100000178	5119	5	20.798166			
100000178	5119	6	24.463846			
100000178	5119	7	19.037937			
100000178	5119	8	20.521541			
100000178	5119	9	19.658027			
100000178	5119	10	24.113634			
100000178	5120	1	8.108388	ST ANDREWS RD	W	ST ANDREWS RD, RAMP, WOODLAND HILLS RD & I-26 EXIT 106 EB ON RAMP
100000178	5120	2	8.987533			
100000178	5120	3	8.073329			
100000178	5120	4	7.834388			
100000178	5120	5	7.982396			
100000178	5120	6	8.637479			
100000178	5120	7	7.816768			
100000178	5120	8	9.297396			
100000178	5120	9	8.510584			
100000178	5120	10	8.037955			
100000179	3219	1	0	RAMP	S	ST ANDREWS RD & RAMP
100000179	3219	2	0			
100000179	3219	3	0			
100000179	3219	4	0			
100000179	3219	5	0			
100000179	3219	6	0			
100000179	3219	7	0			
100000179	3219	8	0			
100000179	3219	9	0			
100000179	3219	10	0			
100000179	5116	1	12.676817	ST ANDREWS RD	E	ST ANDREWS RD & RAMP
100000179	5116	2	10.951523			
100000179	5116	3	11.711055			
100000179	5116	4	12.104439			
100000179	5116	5	11.085407			
100000179	5116	6	10.803882			
100000179	5116	7	12.377003			
100000179	5116	8	11.944526			
100000179	5116	9	10.395616			
100000179	5116	10	11.250283			
100000179	5118	1	0	ST ANDREWS RD	W	ST ANDREWS RD & RAMP
100000179	5118	2	0			
100000179	5118	3	0			
100000179	5118	4	0			
100000179	5118	5	0.000168			
100000179	5118	6	0.004612			
100000179	5118	7	0			
100000179	5118	8	0			
100000179	5118	9	0			
100000179	5118	10	0			
100000182	3292	1	0	EXIT 106 WB OFF RAMP	NE	ST ANDREWS RD, EXIT 106 WB OFF RAMP & EXIT 106 WB ON RAMP
100000182	3292	2	0			
100000182	3292	3	0			
100000182	3292	4	0			
100000182	3292	5	0			
100000182	3292	6	0			
100000182	3292	7	0			
100000182	3292	8	0			
100000182	3292	9	0			
100000182	3292	10	0			
100000182	5123	1	0	ST ANDREWS RD	E	ST ANDREWS RD, EXIT 106 WB OFF RAMP & EXIT 106 WB ON RAMP
100000182	5123	2	0			
100000182	5123	3	0			
100000182	5123	4	0			
100000182	5123	5	0			
100000182	5123	6	0			
100000182	5123	7	0			
100000182	5123	8	0			
100000182	5123	9	0			
100000182	5123	10	0			
100000182	5124	1	0	ST ANDREWS RD	SW	ST ANDREWS RD, EXIT 106 WB OFF RAMP & EXIT 106 WB ON RAMP
100000182	5124	2	0			
100000182	5124	3	0			
100000182	5124	4	0			
100000182	5124	5	0			
100000182	5124	6	0			
100000182	5124	7	0			
100000182	5124	8	0			
100000182	5124	9	0			
100000182	5124	10	0			
100000184	5499	1	17.024802	N ARROWWOOD RD	S	ARROWWOOD RD, BUSH RIVER RD & N ARROWWOOD RD
100000184	5499	2	18.640274			
100000184	5499	3	21.447186			
100000184	5499	4	18.055766			
100000184	5499	5	17.570745			
100000184	5499	6	18.666792			
100000184	5499	7	19.893261			
100000184	5499	8	16.854791			
100000184	5499	9	18.188571			
100000184	5499	10	15.524969			
100000184	5500	1	31.290876	ARROWWOOD RD	N	ARROWWOOD RD, BUSH RIVER RD & N ARROWWOOD RD
100000184	5500	2	34.088221			
100000184	5500	3	32.465408			
100000184	5500	4	32.036031			
100000184	5500	5	35.130345			
100000184	5500	6	30.614693			
100000184	5500	7	37.802981			
100000184	5500	8	32.261086			
100000184	5500	9	32.756686			
100000184	5500	10	29.401086			

Node	Superlink	Run	Average Control Delay	Approach Street Name	Direction	Intersection
100000184	6497	1	12.980845	BUSH RIVER RD	W	ARROWWOOD RD, BUSH RIVER RD & N ARROWWOOD RD
100000184	6497	2	13.030215			
100000184	6497	3	30.647778			
100000184	6497	4	33.310918			
100000184	6497	5	16.153535			
100000184	6497	6	16.510994			
100000184	6497	7	36.724129			
100000184	6497	8	11.638198			
100000184	6497	9	14.725602			
100000184	6497	10	12.367888			
100000184	6505	1	10.462518	BUSH RIVER RD	E	ARROWWOOD RD, BUSH RIVER RD & N ARROWWOOD RD
100000184	6505	2	10.731122			
100000184	6505	3	11.603674			
100000184	6505	4	14.93066			
100000184	6505	5	11.048265			
100000184	6505	6	11.989622			
100000184	6505	7	12.354542			
100000184	6505	8	11.719485			
100000184	6505	9	11.407108			
100000184	6505	10	10.901975			
100000185	3230	1	54.494207	RAMP	W	GREYSTONE BLVD, RAMP & I-126 EB ON RAMP FROM GREYSTONE BLVD
100000185	3230	2	39.50581			
100000185	3230	3	26.049197			
100000185	3230	4	34.705185			
100000185	3230	5	36.74498			
100000185	3230	6	44.883125			
100000185	3230	7	33.350426			
100000185	3230	8	36.515798			
100000185	3230	9	34.287878			
100000185	3230	10	44.14681			
100000185	5140	1	0.370613	GREYSTONE BLVD	N	GREYSTONE BLVD, RAMP & I-126 EB ON RAMP FROM GREYSTONE BLVD
100000185	5140	2	0.425031			
100000185	5140	3	0.500773			
100000185	5140	4	0.318815			
100000185	5140	5	0.469386			
100000185	5140	6	0.283975			
100000185	5140	7	0.344948			
100000185	5140	8	0.439093			
100000185	5140	9	0.266732			
100000185	5140	10	0.350602			
100000185	5141	1	5.296891	GREYSTONE BLVD	S	GREYSTONE BLVD, RAMP & I-126 EB ON RAMP FROM GREYSTONE BLVD
100000185	5141	2	4.152055			
100000185	5141	3	3.760586			
100000185	5141	4	4.584942			
100000185	5141	5	4.169817			
100000185	5141	6	2.847366			
100000185	5141	7	3.642279			
100000185	5141	8	3.332798			
100000185	5141	9	3.154476			
100000185	5141	10	4.252372			
100000186	4949	1	12.402727	SUNSET BLVD	W	HARBOR DR, SUNSET BLVD & E HOSPITAL DR
100000186	4949	2	13.954282			
100000186	4949	3	11.167513			
100000186	4949	4	11.836635			
100000186	4949	5	9.556775			
100000186	4949	6	11.529158			
100000186	4949	7	13.013456			
100000186	4949	8	11.355904			
100000186	4949	9	12.067799			
100000186	4949	10	13.248433			
100000186	5386	1	190.043617	HARBOR DR	N	HARBOR DR, SUNSET BLVD & E HOSPITAL DR
100000186	5386	2	255.26702			
100000186	5386	3	328.841209			
100000186	5386	4	320.978577			
100000186	5386	5	310.607557			
100000186	5386	6	329.963917			
100000186	5386	7	411.985681			
100000186	5386	8	374.93558			
100000186	5386	9	403.105867			
100000186	5386	10	378.972121			
100000186	5387	1	142.000258	E HOSPITAL DR	S	HARBOR DR, SUNSET BLVD & E HOSPITAL DR
100000186	5387	2	182.327997			
100000186	5387	3	98.758246			
100000186	5387	4	181.586669			
100000186	5387	5	81.265985			
100000186	5387	6	140.972187			
100000186	5387	7	206.283325			
100000186	5387	8	145.98293			
100000186	5387	9	217.791907			
100000186	5387	10	132.738957			
100000186	6762	1	25.353644	SUNSET BLVD	E	HARBOR DR, SUNSET BLVD & E HOSPITAL DR
100000186	6762	2	29.759436			
100000186	6762	3	24.200857			
100000186	6762	4	30.356423			
100000186	6762	5	22.453461			
100000186	6762	6	25.985593			
100000186	6762	7	32.929052			
100000186	6762	8	34.659941			
100000186	6762	9	31.04099			
100000186	6762	10	34.235344			
100000187	6057	1	87.531438	BROAD RIVER RD	NW	BROAD RIVER RD, BRIARGATE CIR & MARLEY DR
100000187	6057	2	75.136814			
100000187	6057	3	82.109058			
100000187	6057	4	83.313163			
100000187	6057	5	86.028958			
100000187	6057	6	84.644998			
100000187	6057	7	74.260724			
100000187	6057	8	69.044955			
100000187	6057	9	39.736702			
100000187	6057	10	67.175972			
100000187	6059	1	14.046412	BROAD RIVER RD	SE	BROAD RIVER RD, BRIARGATE CIR & MARLEY DR
100000187	6059	2	5.707724			
100000187	6059	3	8.821207			
100000187	6059	4	4.843569			
100000187	6059	5	3.037155			
100000187	6059	6	6.354935			
100000187	6059	7	3.932696			
100000187	6059	8	5.462261			
100000187	6059	9	3.646738			
100000187	6059	10	4.71653			
100000187	6060	1	80.960409	MARLEY DR	SW	BROAD RIVER RD, BRIARGATE CIR & MARLEY DR
100000187	6060	2	62.082584			

Node	Superlink	Run	Average Control Delay	Approach Street Name	Direction	Intersection
100000187	6060	3	61.849998			
100000187	6060	4	59.822117			
100000187	6060	5	65.486766			
100000187	6060	6	60.736604			
100000187	6060	7	56.538646			
100000187	6060	8	59.821764			
100000187	6060	9	61.186599			
100000187	6060	10	60.316979			
100000187	6061	1	36.224403	BRIARGATE CIR	NE	BROAD RIVER RD, BRIARGATE CIR & MARLEY DR
100000187	6061	2	45.028053			
100000187	6061	3	36.790537			
100000187	6061	4	35.892561			
100000187	6061	5	31.031196			
100000187	6061	6	38.639985			
100000187	6061	7	45.340545			
100000187	6061	8	38.985019			
100000187	6061	9	28.761036			
100000187	6061	10	33.87621			
100000188	3221	1	6.777478	RAMP	W	GREYSTONE BLVD & RAMP
100000188	3221	2	24.866105			
100000188	3221	3	19.409088			
100000188	3221	4	24.04798			
100000188	3221	5	14.600149			
100000188	3221	6	13.425728			
100000188	3221	7	11.115529			
100000188	3221	8	26.452775			
100000188	3221	9	20.624045			
100000188	3221	10	18.575866			
100000188	5143	1	1.382636	GREYSTONE BLVD	N	GREYSTONE BLVD & RAMP
100000188	5143	2	1.026723			
100000188	5143	3	1.476434			
100000188	5143	4	1.045668			
100000188	5143	5	0.872916			
100000188	5143	6	1.205547			
100000188	5143	7	1.300116			
100000188	5143	8	1.218419			
100000188	5143	9	1.524648			
100000188	5143	10	0.851075			
100000188	5144	1	0.002612	GREYSTONE BLVD	S	GREYSTONE BLVD & RAMP
100000188	5144	2	0.007781			
100000188	5144	3	0.005835			
100000188	5144	4	0.009553			
100000188	5144	5	0.023435			
100000188	5144	6	0.021615			
100000188	5144	7	0			
100000188	5144	8	0.009917			
100000188	5144	9	0.013819			
100000188	5144	10	0.027026			
100000189	4346	1	205.157418	I-20 EXIT 65 WB OFF RAMP	SW	I-20 EXIT 65 WB OFF RAMP, BROAD RIVER RD & RAMP
100000189	4346	2	168.719972			
100000189	4346	3	248.634956			
100000189	4346	4	319.485167			
100000189	4346	5	233.545068			
100000189	4346	6	287.488732			
100000189	4346	7	173.618825			
100000189	4346	8	152.444268			
100000189	4346	9	130.583723			
100000189	4346	10	200.100821			
100000189	6057	1	63.716486	BROAD RIVER RD	SE	I-20 EXIT 65 WB OFF RAMP, BROAD RIVER RD & RAMP
100000189	6057	2	45.693361			
100000189	6057	3	76.860941			
100000189	6057	4	52.760764			
100000189	6057	5	35.107761			
100000189	6057	6	52.99736			
100000189	6057	7	44.022503			
100000189	6057	8	50.799719			
100000189	6057	9	38.424374			
100000189	6057	10	30.567353			
100000189	6447	1	39.088709	BROAD RIVER RD	NW	I-20 EXIT 65 WB OFF RAMP, BROAD RIVER RD & RAMP
100000189	6447	2	33.523626			
100000189	6447	3	40.720772			
100000189	6447	4	27.181934			
100000189	6447	5	41.314126			
100000189	6447	6	42.618189			
100000189	6447	7	58.16006			
100000189	6447	8	32.081892			
100000189	6447	9	20.682564			
100000189	6447	10	31.290562			
100000190	4341	1	73.187921	I-20 EXIT 65 EB OFF RAMP	E	BROAD RIVER RD, I-20 EXIT 65 EB OFF RAMP & SERVICE RD
100000190	4341	2	58.189947			
100000190	4341	3	67.707081			
100000190	4341	4	42.616128			
100000190	4341	5	61.612403			
100000190	4341	6	151.870488			
100000190	4341	7	76.607185			
100000190	4341	8	71.385082			
100000190	4341	9	55.782621			
100000190	4341	10	53.865237			
100000190	5148	1	1.914198	BROAD RIVER RD	SE	BROAD RIVER RD, I-20 EXIT 65 EB OFF RAMP & SERVICE RD
100000190	5148	2	1.546223			
100000190	5148	3	1.670484			
100000190	5148	4	1.326768			
100000190	5148	5	1.455769			
100000190	5148	6	1.538226			
100000190	5148	7	1.449907			
100000190	5148	8	1.502355			
100000190	5148	9	1.594269			
100000190	5148	10	1.593652			
100000190	6445	1	5.767584	BROAD RIVER RD	NW	BROAD RIVER RD, I-20 EXIT 65 EB OFF RAMP & SERVICE RD
100000190	6445	2	5.926975			
100000190	6445	3	6.038598			
100000190	6445	4	4.95386			
100000190	6445	5	5.662756			
100000190	6445	6	5.8226			
100000190	6445	7	8.007452			
100000190	6445	8	5.872			
100000190	6445	9	5.328868			
100000190	6445	10	5.895828			
100000190	6446	1		SERVICE RD	SW	BROAD RIVER RD, I-20 EXIT 65 EB OFF RAMP & SERVICE RD
100000190	6446	2				
100000190	6446	3				
100000190	6446	4				

Node	Superlink	Run	Average Control Delay	Approach Street Name	Direction	Intersection
100000190	6446	5				
100000190	6446	6				
100000190	6446	7				
100000190	6446	8				
100000190	6446	9				
100000190	6446	10				
100000191	5399	1	0.008572	HARBOR DR	S	HARBOR DR & OAKWOOD DR
100000191	5399	2	0.06566			
100000191	5399	3	0.01744			
100000191	5399	4	0.054897			
100000191	5399	5	0.047569			
100000191	5399	6	0.047446			
100000191	5399	7	0.062068			
100000191	5399	8	0.056062			
100000191	5399	9	0			
100000191	5399	10	0.040851			
100000191	5414	1	6.488551	OAKWOOD DR	NE	HARBOR DR & OAKWOOD DR
100000191	5414	2	64.803616			
100000191	5414	3	23.196562			
100000191	5414	4	14.561382			
100000191	5414	5	59.631727			
100000191	5414	6	52.417032			
100000191	5414	7	154.765835			
100000191	5414	8	49.746552			
100000191	5414	9	106.107224			
100000191	5414	10	130.178082			
100000191	5420	1	0	HARBOR DR	N	HARBOR DR & OAKWOOD DR
100000191	5420	2	0			
100000191	5420	3	0			
100000191	5420	4	0			
100000191	5420	5	0			
100000191	5420	6	0			
100000191	5420	7	0.343089			
100000191	5420	8	0			
100000191	5420	9	0			
100000191	5420	10	0			
100000193	4350	1	22.488287	I-20 EXIT 68 EB OFF RAMP	E	BUCKNER RD, MONTICELLO RD & I-20 EXIT 68 EB OFF RAMP
100000193	4350	2	24.18631			
100000193	4350	3	24.893038			
100000193	4350	4	25.839305			
100000193	4350	5	23.320015			
100000193	4350	6	22.091			
100000193	4350	7	21.859006			
100000193	4350	8	25.105952			
100000193	4350	9	21.761214			
100000193	4350	10	25.592664			
100000193	5154	1	16.891813	MONTICELLO RD	N	BUCKNER RD, MONTICELLO RD & I-20 EXIT 68 EB OFF RAMP
100000193	5154	2	20.856816			
100000193	5154	3	17.957711			
100000193	5154	4	18.588085			
100000193	5154	5	18.328423			
100000193	5154	6	18.739731			
100000193	5154	7	18.533765			
100000193	5154	8	18.535045			
100000193	5154	9	17.035663			
100000193	5154	10	18.850355			
100000193	5155	1	21.049641	MONTICELLO RD	SE	BUCKNER RD, MONTICELLO RD & I-20 EXIT 68 EB OFF RAMP
100000193	5155	2	18.100679			
100000193	5155	3	16.907939			
100000193	5155	4	20.026114			
100000193	5155	5	17.787758			
100000193	5155	6	17.982029			
100000193	5155	7	18.323913			
100000193	5155	8	21.335804			
100000193	5155	9	16.348224			
100000193	5155	10	18.545266			
100000193	5163	1	11.760011	BUCKNER RD	SW	BUCKNER RD, MONTICELLO RD & I-20 EXIT 68 EB OFF RAMP
100000193	5163	2	9.556973			
100000193	5163	3	11.175281			
100000193	5163	4	10.930454			
100000193	5163	5	12.205027			
100000193	5163	6	10.548532			
100000193	5163	7	9.735959			
100000193	5163	8	10.807825			
100000193	5163	9	11.17119			
100000193	5163	10	10.579043			
100000195	5150	1	8.593847	BROAD RIVER RD	SE	LONGCREEK DR & BROAD RIVER RD
100000195	5150	2	5.760952			
100000195	5150	3	5.00518			
100000195	5150	4	5.233229			
100000195	5150	5	6.890893			
100000195	5150	6	7.844362			
100000195	5150	7	8.5557			
100000195	5150	8	6.758795			
100000195	5150	9	5.855057			
100000195	5150	10	5.579926			
100000195	6049	1	3.834068	BROAD RIVER RD	NW	LONGCREEK DR & BROAD RIVER RD
100000195	6049	2	3.138647			
100000195	6049	3	2.618423			
100000195	6049	4	2.611113			
100000195	6049	5	3.877401			
100000195	6049	6	3.239885			
100000195	6049	7	5.148329			
100000195	6049	8	3.49689			
100000195	6049	9	2.712281			
100000195	6049	10	3.110221			
100000195	6052	1	39.630024	LONGCREEK DR	SW	LONGCREEK DR & BROAD RIVER RD
100000195	6052	2	32.556235			
100000195	6052	3	28.239049			
100000195	6052	4	28.634437			
100000195	6052	5	35.001197			
100000195	6052	6	35.525846			
100000195	6052	7	46.715793			
100000195	6052	8	35.061102			
100000195	6052	9	29.970376			
100000195	6052	10	33.546781			
100000196	5166	1	0.965957	MONTICELLO RD	SE	SERVICE RD, MONTICELLO RD & RAMP
100000196	5166	2	1.615378			
100000196	5166	3	0.946727			
100000196	5166	4	1.070426			
100000196	5166	5	1.438613			
100000196	5166	6	1.486072			

Node	Superlink	Run	Average Control Delay	Approach Street Name	Direction	Intersection
100000196	5166	7	1.495564			
100000196	5166	8	1.397458			
100000196	5166	9	1.138394			
100000196	5166	10	1.825621			
100000196	5169	1	12.029939	SERVICE RD	SW	SERVICE RD, MONTICELLO RD & RAMP
100000196	5169	2	15.166549			
100000196	5169	3	13.815938			
100000196	5169	4	15.343251			
100000196	5169	5	15.209148			
100000196	5169	6	13.080632			
100000196	5169	7	17.187356			
100000196	5169	8	13.452293			
100000196	5169	9	10.763767			
100000196	5169	10	14.017519			
100000196	5172	1	1.111694	MONTICELLO RD	NW	SERVICE RD, MONTICELLO RD & RAMP
100000196	5172	2	1.924921			
100000196	5172	3	1.474695			
100000196	5172	4	1.213467			
100000196	5172	5	1.361255			
100000196	5172	6	1.49884			
100000196	5172	7	1.348753			
100000196	5172	8	1.315659			
100000196	5172	9	1.64609			
100000196	5172	10	1.086449			
100000198	4354	1	0	RAMP	N	RAMP & I-20 EXIT 68 EB ON RAMP
100000198	4354	2	0			
100000198	4354	3	0			
100000198	4354	4	0			
100000198	4354	5	0			
100000198	4354	6	0			
100000198	4354	7	0			
100000198	4354	8	0			
100000198	4354	9	0			
100000198	4354	10	0			
100000198	5158	1		RAMP	NW	RAMP & I-20 EXIT 68 EB ON RAMP
100000198	5158	2				
100000198	5158	3				
100000198	5158	4				
100000198	5158	5				
100000198	5158	6				
100000198	5158	7				
100000198	5158	8				
100000198	5158	9				
100000198	5158	10				
100000200	5174	1	6.684004	MONTICELLO RD	NW	MONTICELLO RD, PEEPLES ST & BLUE RIDGE TER
100000200	5174	2	6.254715			
100000200	5174	3	4.979063			
100000200	5174	4	5.186423			
100000200	5174	5	6.025841			
100000200	5174	6	5.192748			
100000200	5174	7	5.791576			
100000200	5174	8	6.351744			
100000200	5174	9	5.308589			
100000200	5174	10	5.721914			
100000200	6041	1	4.740598	MONTICELLO RD	SE	MONTICELLO RD, PEEPLES ST & BLUE RIDGE TER
100000200	6041	2	4.856552			
100000200	6041	3	4.356618			
100000200	6041	4	4.118362			
100000200	6041	5	4.911296			
100000200	6041	6	4.830527			
100000200	6041	7	4.8314			
100000200	6041	8	4.95012			
100000200	6041	9	4.50274			
100000200	6041	10	4.447185			
100000200	6044	1	13.952853	PEEPLES ST	NE	MONTICELLO RD, PEEPLES ST & BLUE RIDGE TER
100000200	6044	2	9.735081			
100000200	6044	3	12.645059			
100000200	6044	4	13.393706			
100000200	6044	5	10.180757			
100000200	6044	6	12.155293			
100000200	6044	7	10.592186			
100000200	6044	8	11.902997			
100000200	6044	9	11.063576			
100000200	6044	10	12.809545			
100000200	6046	1	25.23458	BLUE RIDGE TER	S	MONTICELLO RD, PEEPLES ST & BLUE RIDGE TER
100000200	6046	2	25.707963			
100000200	6046	3	25.527086			
100000200	6046	4	23.052509			
100000200	6046	5	23.539511			
100000200	6046	6	26.444096			
100000200	6046	7	26.030441			
100000200	6046	8	23.945241			
100000200	6046	9	22.422049			
100000200	6046	10	25.081077			
100000201	5157	1	2.216167	BUCKNER RD	SW	BUCKNER RD & TO BUCKNER ROAD
100000201	5157	2	1.716976			
100000201	5157	3	3.22403			
100000201	5157	4	3.148526			
100000201	5157	5	2.649208			
100000201	5157	6	3.056744			
100000201	5157	7	2.55359			
100000201	5157	8	3.032802			
100000201	5157	9	3.823661			
100000201	5157	10	2.619409			
100000201	5161	1	0.016041	TO BUCKNER ROAD	N	BUCKNER RD & TO BUCKNER ROAD
100000201	5161	2	0.278472			
100000201	5161	3	0.05248			
100000201	5161	4	0.513345			
100000201	5161	5	2.843348			
100000201	5161	6	0.977934			
100000201	5161	7	0.014449			
100000201	5161	8	0.063548			
100000201	5161	9	1.371173			
100000201	5161	10	0			
100000201	5163	1	0.0004	BUCKNER RD	NE	BUCKNER RD & TO BUCKNER ROAD
100000201	5163	2	0.000723			
100000201	5163	3	0.001073			
100000201	5163	4	0.000978			
100000201	5163	5	0.000694			
100000201	5163	6	0.000981			
100000201	5163	7	0.002194			
100000201	5163	8	0.000617			

Node	Superlink	Run	Average Control Delay	Approach Street Name	Direction	Intersection
100000201	5163	9	0.001907			
100000201	5163	10	0.000699			
100000203	5169	1		SERVICE RD	E	SERVICE RD & MONTICELLO RD
100000203	5169	2				
100000203	5169	3				
100000203	5169	4				
100000203	5169	5				
100000203	5169	6				
100000203	5169	7				
100000203	5169	8				
100000203	5169	9				
100000203	5169	10				
100000203	5171	1		MONTICELLO RD	N	SERVICE RD & MONTICELLO RD
100000203	5171	2				
100000203	5171	3				
100000203	5171	4				
100000203	5171	5				
100000203	5171	6				
100000203	5171	7				
100000203	5171	8				
100000203	5171	9				
100000203	5171	10				
100000203	5173	1	0.225287	SERVICE RD	W	SERVICE RD & MONTICELLO RD
100000203	5173	2	0.268178			
100000203	5173	3	0.200016			
100000203	5173	4	0.18347			
100000203	5173	5	0.316609			
100000203	5173	6	0.256059			
100000203	5173	7	0.25585			
100000203	5173	8	0.208955			
100000203	5173	9	0.284386			
100000203	5173	10	0.368297			
100000250	6539	1	2.336965	BUSH RIVER RD	NW	E MEADOW CT/WOODLAND VILLAGE DR, BUSH RIVER RD & OUTLET POINTE BLVD
100000250	6539	2	2.292439			
100000250	6539	3	1.818378			
100000250	6539	4	1.812259			
100000250	6539	5	2.444835			
100000250	6539	6	2.328799			
100000250	6539	7	2.726785			
100000250	6539	8	2.197245			
100000250	6539	9	1.742658			
100000250	6539	10	2.794764			
100000250	6546	1	23.314872	OUTLET POINTE BLVD	NE	E MEADOW CT/WOODLAND VILLAGE DR, BUSH RIVER RD & OUTLET POINTE BLVD
100000250	6546	2	25.399982			
100000250	6546	3	25.901554			
100000250	6546	4	26.430137			
100000250	6546	5	24.25721			
100000250	6546	6	25.052854			
100000250	6546	7	23.615084			
100000250	6546	8	26.29429			
100000250	6546	9	25.618523			
100000250	6546	10	27.359752			
100000250	6547	1	34.759205	E MEADOW CT/WOODLAND VILLAGE DR	SW	E MEADOW CT/WOODLAND VILLAGE DR, BUSH RIVER RD & OUTLET POINTE BLVD
100000250	6547	2	36.04651			
100000250	6547	3	32.270879			
100000250	6547	4	34.266889			
100000250	6547	5	31.050301			
100000250	6547	6	41.395157			
100000250	6547	7	32.070359			
100000250	6547	8	32.92319			
100000250	6547	9	40.453604			
100000250	6547	10	32.658212			
100000250	6548	1	9.759228	BUSH RIVER RD	SE	E MEADOW CT/WOODLAND VILLAGE DR, BUSH RIVER RD & OUTLET POINTE BLVD
100000250	6548	2	11.988286			
100000250	6548	3	12.76948			
100000250	6548	4	11.368602			
100000250	6548	5	11.126569			
100000250	6548	6	11.87741			
100000250	6548	7	10.830058			
100000250	6548	8	9.942334			
100000250	6548	9	9.222843			
100000250	6548	10	14.049252			
100000252	5125	1	14.57782	BUSH RIVER RD	E	MORNINGHILL DR, BUSH RIVER RD & RAMP
100000252	5125	2	14.817776			
100000252	5125	3	14.267441			
100000252	5125	4	15.95235			
100000252	5125	5	14.545975			
100000252	5125	6	14.139031			
100000252	5125	7	13.494759			
100000252	5125	8	14.498124			
100000252	5125	9	13.441499			
100000252	5125	10	14.111056			
100000252	5487	1	80.979767	MORNINGHILL DR	S	MORNINGHILL DR, BUSH RIVER RD & RAMP
100000252	5487	2	65.060607			
100000252	5487	3	87.951478			
100000252	5487	4	87.430837			
100000252	5487	5	63.041809			
100000252	5487	6	62.688266			
100000252	5487	7	82.601366			
100000252	5487	8	59.125135			
100000252	5487	9	57.119591			
100000252	5487	10	66.12986			
100000252	5488	1	17.893923	RAMP	N	MORNINGHILL DR, BUSH RIVER RD & RAMP
100000252	5488	2	17.565667			
100000252	5488	3	17.628978			
100000252	5488	4	17.107154			
100000252	5488	5	18.526631			
100000252	5488	6	18.139578			
100000252	5488	7	17.387618			
100000252	5488	8	17.014179			
100000252	5488	9	17.327205			
100000252	5488	10	17.475651			
100000252	6505	1	29.467723	BUSH RIVER RD	W	MORNINGHILL DR, BUSH RIVER RD & RAMP
100000252	6505	2	28.880743			
100000252	6505	3	56.661004			
100000252	6505	4	63.592507			
100000252	6505	5	36.531576			
100000252	6505	6	33.112238			
100000252	6505	7	69.766208			
100000252	6505	8	33.282514			
100000252	6505	9	27.820128			
100000252	6505	10	38.408187			

Node	Superlink	Run	Average Control Delay	Approach Street Name	Direction	Intersection
100000255	5038	1	1.168149	BUSH RIVER RD	E	BUSH RIVER RD & INDEPENDENCE AVE
100000255	5038	2	0.845319			
100000255	5038	3	0.242655			
100000255	5038	4	0.508556			
100000255	5038	5	0.308473			
100000255	5038	6	0.495743			
100000255	5038	7	0.70646			
100000255	5038	8	0.921298			
100000255	5038	9	0.62464			
100000255	5038	10	0.565678			
100000255	5470	1	38.95162	INDEPENDENCE AVE	N	BUSH RIVER RD & INDEPENDENCE AVE
100000255	5470	2	37.30163			
100000255	5470	3	35.775716			
100000255	5470	4	44.273378			
100000255	5470	5	39.211089			
100000255	5470	6	41.146609			
100000255	5470	7	41.640551			
100000255	5470	8	41.843133			
100000255	5470	9	48.745726			
100000255	5470	10	38.714292			
100000255	5471	1	8.072173	BUSH RIVER RD	W	BUSH RIVER RD & INDEPENDENCE AVE
100000255	5471	2	9.260147			
100000255	5471	3	9.352845			
100000255	5471	4	7.402467			
100000255	5471	5	7.451566			
100000255	5471	6	9.738759			
100000255	5471	7	8.584925			
100000255	5471	8	7.916951			
100000255	5471	9	10.881569			
100000255	5471	10	12.04808			
100000256	5131	1	1.384337	BUSH RIVER RD	W	BUSH RIVER RD & ZIMALCREST DR
100000256	5131	2	0.840272			
100000256	5131	3	1.093677			
100000256	5131	4	1.267479			
100000256	5131	5	1.208089			
100000256	5131	6	1.074026			
100000256	5131	7	1.830004			
100000256	5131	8	1.485151			
100000256	5131	9	1.45105			
100000256	5131	10	1.069859			
100000256	5465	1	5.707608	BUSH RIVER RD	E	BUSH RIVER RD & ZIMALCREST DR
100000256	5465	2	5.446481			
100000256	5465	3	6.016399			
100000256	5465	4	4.895816			
100000256	5465	5	4.550364			
100000256	5465	6	5.832324			
100000256	5465	7	7.010452			
100000256	5465	8	7.197168			
100000256	5465	9	4.996332			
100000256	5465	10	4.863796			
100000256	5484	1	56.142323	ZIMALCREST DR	S	BUSH RIVER RD & ZIMALCREST DR
100000256	5484	2	47.635468			
100000256	5484	3	55.86612			
100000256	5484	4	40.035399			
100000256	5484	5	47.397514			
100000256	5484	6	47.753643			
100000256	5484	7	58.531797			
100000256	5484	8	53.394393			
100000256	5484	9	61.367869			
100000256	5484	10	47.857346			
100000256	5485	1	10.806985	ZIMALCREST DR	N	BUSH RIVER RD & ZIMALCREST DR
100000256	5485	2	11.200388			
100000256	5485	3	10.853331			
100000256	5485	4	10.071716			
100000256	5485	5	11.597865			
100000256	5485	6	10.494932			
100000256	5485	7	10.104136			
100000256	5485	8	11.016866			
100000256	5485	9	11.485687			
100000256	5485	10	11.870969			
100000259	5465	1	0	BUSH RIVER RD	W	NOTTINGWOOD DR & BUSH RIVER RD
100000259	5465	2	0			
100000259	5465	3	0			
100000259	5465	4	0			
100000259	5465	5	0			
100000259	5465	6	0			
100000259	5465	7	0			
100000259	5465	8	0			
100000259	5465	9	0			
100000259	5465	10	0			
100000259	5471	1	0	BUSH RIVER RD	E	NOTTINGWOOD DR & BUSH RIVER RD
100000259	5471	2	0			
100000259	5471	3	0			
100000259	5471	4	0			
100000259	5471	5	0			
100000259	5471	6	0			
100000259	5471	7	0			
100000259	5471	8	0			
100000259	5471	9	0			
100000259	5471	10	0			
100000259	5472	1		NOTTINGWOOD DR	S	NOTTINGWOOD DR & BUSH RIVER RD
100000259	5472	2				
100000259	5472	3				
100000259	5472	4				
100000259	5472	5				
100000259	5472	6				
100000259	5472	7				
100000259	5472	8				
100000259	5472	9				
100000259	5472	10				
100000262	5502	1	5.989586	BUSH RIVER RD	E	DUTCH SQUARE ENTRANCE, BUSH RIVER RD & COLONIAL LIFE BLVD W
100000262	5502	2	7.641057			
100000262	5502	3	7.9731			
100000262	5502	4	7.487133			
100000262	5502	5	7.562647			
100000262	5502	6	7.491832			
100000262	5502	7	8.515644			
100000262	5502	8	6.856862			
100000262	5502	9	7.476644			
100000262	5502	10	7.601297			
100000262	5506	1	13.558407	COLONIAL LIFE BLVD W	N	DUTCH SQUARE ENTRANCE, BUSH RIVER RD & COLONIAL LIFE BLVD W
100000262	5506	2	13.579374			

Node	Superlink	Run	Average Control Delay	Approach Street Name	Direction	Intersection
100000262	5506	3	13.481172			
100000262	5506	4	13.242789			
100000262	5506	5	13.666179			
100000262	5506	6	13.506677			
100000262	5506	7	14.052268			
100000262	5506	8	15.099393			
100000262	5506	9	13.850814			
100000262	5506	10	13.41112			
100000262	5509	1	63.346271	DUTCH SQUARE ENTRANCE	S	DUTCH SQUARE ENTRANCE, BUSH RIVER RD & COLONIAL LIFE BLVD W
100000262	5509	2	60.901847			
100000262	5509	3	65.130308			
100000262	5509	4	69.381218			
100000262	5509	5	58.398361			
100000262	5509	6	60.005228			
100000262	5509	7	60.578333			
100000262	5509	8	56.088722			
100000262	5509	9	64.246544			
100000262	5509	10	59.433197			
100000262	5511	1	23.75886	BUSH RIVER RD	W	DUTCH SQUARE ENTRANCE, BUSH RIVER RD & COLONIAL LIFE BLVD W
100000262	5511	2	22.881373			
100000262	5511	3	21.61997			
100000262	5511	4	23.883119			
100000262	5511	5	21.326329			
100000262	5511	6	24.057696			
100000262	5511	7	25.607857			
100000262	5511	8	24.509254			
100000262	5511	9	22.256011			
100000262	5511	10	23.451873			
100000263	5516	1	0.761167	COLONIAL LIFE BLVD W	N	COLONIAL LIFE BLVD W
100000263	5516	2	1.554601			
100000263	5516	3	0.791014			
100000263	5516	4	0.598914			
100000263	5516	5	0.855628			
100000263	5516	6	3.177096			
100000263	5516	7	0.616027			
100000263	5516	8	1.308493			
100000263	5516	9	0.591408			
100000263	5516	10	0.426455			
100000263	5520	1	68.028698	COLONIAL LIFE BLVD W	W	COLONIAL LIFE BLVD W
100000263	5520	2	72.926451			
100000263	5520	3	33.041491			
100000263	5520	4	63.547409			
100000263	5520	5	45.031002			
100000263	5520	6	53.936182			
100000263	5520	7	67.936088			
100000263	5520	8	116.839627			
100000263	5520	9	29.505045			
100000263	5520	10	43.182271			
100000263	6495	1	1.97022	COLONIAL LIFE BLVD W	S	COLONIAL LIFE BLVD W
100000263	6495	2	3.378706			
100000263	6495	3	2.159433			
100000263	6495	4	2.920379			
100000263	6495	5	2.725113			
100000263	6495	6	2.042577			
100000263	6495	7	2.288118			
100000263	6495	8	2.523182			
100000263	6495	9	2.100427			
100000263	6495	10	2.056811			
100000265	5139	1	11.931449	GREYSTONE BLVD	N	GREYSTONE BLVD & STONERIDGE DR
100000265	5139	2	12.986183			
100000265	5139	3	11.986802			
100000265	5139	4	12.60807			
100000265	5139	5	12.915045			
100000265	5139	6	12.129162			
100000265	5139	7	12.278673			
100000265	5139	8	12.986608			
100000265	5139	9	11.514658			
100000265	5139	10	13.598388			
100000265	5537	1	22.15747	STONERIDGE DR	W	GREYSTONE BLVD & STONERIDGE DR
100000265	5537	2	19.830067			
100000265	5537	3	21.83058			
100000265	5537	4	21.632538			
100000265	5537	5	22.413367			
100000265	5537	6	21.11875			
100000265	5537	7	18.055406			
100000265	5537	8	21.768236			
100000265	5537	9	20.642406			
100000265	5537	10	21.257846			
100000265	5556	1	13.074613	STONERIDGE DR	E	GREYSTONE BLVD & STONERIDGE DR
100000265	5556	2	12.762677			
100000265	5556	3	12.060149			
100000265	5556	4	12.874422			
100000265	5556	5	10.389753			
100000265	5556	6	11.700105			
100000265	5556	7	11.073339			
100000265	5556	8	11.795028			
100000265	5556	9	11.986316			
100000265	5556	10	11.303986			
100000265	6328	1	17.822085	GREYSTONE BLVD	S	GREYSTONE BLVD & STONERIDGE DR
100000265	6328	2	18.563799			
100000265	6328	3	17.465548			
100000265	6328	4	18.426073			
100000265	6328	5	17.664247			
100000265	6328	6	19.052014			
100000265	6328	7	19.193069			
100000265	6328	8	18.794642			
100000265	6328	9	19.102687			
100000265	6328	10	17.422219			
100000266	5545	1	31.355036	GREYSTONE BLVD	N	GREYSTONE BLVD & BROAD RIVER RD
100000266	5545	2	31.320175			
100000266	5545	3	30.327764			
100000266	5545	4	30.669477			
100000266	5545	5	32.853609			
100000266	5545	6	30.374326			
100000266	5545	7	31.934707			
100000266	5545	8	32.064211			
100000266	5545	9	31.802556			
100000266	5545	10	31.761095			
100000266	6325	1	8.124312	BROAD RIVER RD	W	GREYSTONE BLVD & BROAD RIVER RD
100000266	6325	2	7.424941			
100000266	6325	3	7.990677			
100000266	6325	4	7.318723			

Node	Superlink	Run	Average Control Delay	Approach Street Name	Direction	Intersection
100000266	6325	5	7.875949			
100000266	6325	6	7.83444			
100000266	6325	7	9.804323			
100000266	6325	8	7.569616			
100000266	6325	9	6.841651			
100000266	6325	10	6.879825			
100000266	6327	1	11.918525	BROAD RIVER RD	E	GREYSTONE BLVD & BROAD RIVER RD
100000266	6327	2	10.782946			
100000266	6327	3	12.053811			
100000266	6327	4	11.920423			
100000266	6327	5	11.415112			
100000266	6327	6	12.046886			
100000266	6327	7	11.817206			
100000266	6327	8	11.755369			
100000266	6327	9	11.04104			
100000266	6327	10	10.636941			
100000268	5565	1	29.404279	HUGER ST	N	HUGER ST & LAUREL ST
100000268	5565	2	34.356249			
100000268	5565	3	29.011856			
100000268	5565	4	24.784586			
100000268	5565	5	31.044803			
100000268	5565	6	26.785139			
100000268	5565	7	24.342428			
100000268	5565	8	25.926823			
100000268	5565	9	22.689379			
100000268	5565	10	28.528552			
100000268	5570	1		LAUREL ST	E	HUGER ST & LAUREL ST
100000268	5570	2				
100000268	5570	3				
100000268	5570	4				
100000268	5570	5				
100000268	5570	6				
100000268	5570	7				
100000268	5570	8				
100000268	5570	9				
100000268	5570	10				
100000268	5571	1	19.625228	HUGER ST	S	HUGER ST & LAUREL ST
100000268	5571	2	20.760809			
100000268	5571	3	20.469008			
100000268	5571	4	19.762218			
100000268	5571	5	17.370274			
100000268	5571	6	19.064591			
100000268	5571	7	20.790207			
100000268	5571	8	18.790733			
100000268	5571	9	19.708746			
100000268	5571	10	20.058945			
100000268	5581	1	57.815887	LAUREL ST	W	HUGER ST & LAUREL ST
100000268	5581	2	56.443481			
100000268	5581	3	53.633549			
100000268	5581	4	61.497502			
100000268	5581	5	52.477554			
100000268	5581	6	59.618745			
100000268	5581	7	57.984944			
100000268	5581	8	60.090806			
100000268	5581	9	51.782707			
100000268	5581	10	65.495117			
100000339	6083	1	8.320599	BROAD RIVER RD	NW	BROAD RIVER RD & ST ANDREWS RD
100000339	6083	2	8.549129			
100000339	6083	3	8.225413			
100000339	6083	4	8.87645			
100000339	6083	5	8.012433			
100000339	6083	6	10.080344			
100000339	6083	7	8.28663			
100000339	6083	8	9.267916			
100000339	6083	9	9.276456			
100000339	6083	10	8.118571			
100000339	6084	1	17.353924	BROAD RIVER RD	SE	BROAD RIVER RD & ST ANDREWS RD
100000339	6084	2	16.854233			
100000339	6084	3	16.3139			
100000339	6084	4	16.917868			
100000339	6084	5	21.716586			
100000339	6084	6	16.585697			
100000339	6084	7	18.977926			
100000339	6084	8	19.656264			
100000339	6084	9	16.939942			
100000339	6084	10	17.21232			
100000339	6085	1	81.228445	ST ANDREWS RD	SW	BROAD RIVER RD & ST ANDREWS RD
100000339	6085	2	75.587887			
100000339	6085	3	86.984319			
100000339	6085	4	77.900598			
100000339	6085	5	72.890545			
100000339	6085	6	69.42773			
100000339	6085	7	76.968998			
100000339	6085	8	69.903312			
100000339	6085	9	104.553066			
100000339	6085	10	80.253397			
100000339	6086	1	27.113904	ST ANDREWS RD	E	BROAD RIVER RD & ST ANDREWS RD
100000339	6086	2	32.042665			
100000339	6086	3	25.363792			
100000339	6086	4	26.746204			
100000339	6086	5	26.641164			
100000339	6086	6	28.414634			
100000339	6086	7	26.909063			
100000339	6086	8	28.923603			
100000339	6086	9	24.708898			
100000339	6086	10	30.538488			
100000343	6059	1	0.000556	BROAD RIVER RD	NW	NUNAMAKER DR & BROAD RIVER RD
100000343	6059	2	0.000258			
100000343	6059	3	0.000292			
100000343	6059	4	0.000165			
100000343	6059	5	0			
100000343	6059	6	0.000209			
100000343	6059	7	0.002922			
100000343	6059	8	0.000423			
100000343	6059	9	0.000452			
100000343	6059	10	0.000943			
100000343	6063	1		NUNAMAKER DR	SW	NUNAMAKER DR & BROAD RIVER RD
100000343	6063	2				
100000343	6063	3				
100000343	6063	4				
100000343	6063	5				
100000343	6063	6				

Node	Superlink	Run	Average Control Delay	Approach Street Name	Direction	Intersection
100000343	6063	7				
100000343	6063	8				
100000343	6063	9				
100000343	6063	10				
100000343	6065	1	0.008442	BROAD RIVER RD	SE	NUNAMAKER DR & BROAD RIVER RD
100000343	6065	2	0.010282			
100000343	6065	3	0.008467			
100000343	6065	4	0.005528			
100000343	6065	5	0.005627			
100000343	6065	6	0.00833			
100000343	6065	7	0.008174			
100000343	6065	8	0.010998			
100000343	6065	9	0.004994			
100000343	6065	10	0.010508			
100000344	6065	1	37.487668	BROAD RIVER RD	NW	YOUNG DR, BROAD RIVER RD & SEMINOLE RD
100000344	6065	2	33.085303			
100000344	6065	3	35.380267			
100000344	6065	4	31.710529			
100000344	6065	5	40.22156			
100000344	6065	6	37.07553			
100000344	6065	7	38.054008			
100000344	6065	8	29.6268			
100000344	6065	9	24.062026			
100000344	6065	10	28.543223			
100000344	6066	1	33.903575	BROAD RIVER RD	SE	YOUNG DR, BROAD RIVER RD & SEMINOLE RD
100000344	6066	2	49.843358			
100000344	6066	3	46.162125			
100000344	6066	4	23.782113			
100000344	6066	5	77.118646			
100000344	6066	6	36.994267			
100000344	6066	7	102.563169			
100000344	6066	8	47.974233			
100000344	6066	9	33.59782			
100000344	6066	10	50.620358			
100000344	6067	1	169.075751	YOUNG DR	SW	YOUNG DR, BROAD RIVER RD & SEMINOLE RD
100000344	6067	2	233.475844			
100000344	6067	3	223.194905			
100000344	6067	4	213.715305			
100000344	6067	5	232.056501			
100000344	6067	6	190.765879			
100000344	6067	7	214.084763			
100000344	6067	8	238.807926			
100000344	6067	9	237.797572			
100000344	6067	10	240.096485			
100000344	6068	1	197.145342	SEMINOLE RD	NE	YOUNG DR, BROAD RIVER RD & SEMINOLE RD
100000344	6068	2	209.973933			
100000344	6068	3	178.428448			
100000344	6068	4	193.897839			
100000344	6068	5	187.411893			
100000344	6068	6	208.418313			
100000344	6068	7	182.362879			
100000344	6068	8	191.610224			
100000344	6068	9	174.106807			
100000344	6068	10	187.650175			
100000348	5116	1	8.144159	ST ANDREWS RD	NW	ST ANDREWS RD & JAMIL RD
100000348	5116	2	7.965443			
100000348	5116	3	6.837994			
100000348	5116	4	7.772441			
100000348	5116	5	7.971133			
100000348	5116	6	9.214797			
100000348	5116	7	8.849525			
100000348	5116	8	8.942606			
100000348	5116	9	8.11047			
100000348	5116	10	8.472471			
100000348	6114	1	7.811306	ST ANDREWS RD	E	ST ANDREWS RD & JAMIL RD
100000348	6114	2	12.155884			
100000348	6114	3	6.538668			
100000348	6114	4	8.562827			
100000348	6114	5	7.273994			
100000348	6114	6	8.533991			
100000348	6114	7	9.759419			
100000348	6114	8	12.110768			
100000348	6114	9	7.612076			
100000348	6114	10	8.93974			
100000348	6119	1	32.73054	JAMIL RD	S	ST ANDREWS RD & JAMIL RD
100000348	6119	2	29.762985			
100000348	6119	3	27.767997			
100000348	6119	4	30.794778			
100000348	6119	5	30.194387			
100000348	6119	6	30.255744			
100000348	6119	7	29.444991			
100000348	6119	8	28.749714			
100000348	6119	9	30.82996			
100000348	6119	10	30.332971			
100000349	6066	1	3.181057	BROAD RIVER RD	NW	ST ANDREWS PKY & BROAD RIVER RD
100000349	6066	2	3.167169			
100000349	6066	3	2.718298			
100000349	6066	4	2.380495			
100000349	6066	5	2.716942			
100000349	6066	6	3.252997			
100000349	6066	7	2.534414			
100000349	6066	8	2.758342			
100000349	6066	9	2.680934			
100000349	6066	10	2.522103			
100000349	6078	1	60.866507	ST ANDREWS PKY	SW	ST ANDREWS PKY & BROAD RIVER RD
100000349	6078	2	56.114118			
100000349	6078	3	54.895562			
100000349	6078	4	61.398212			
100000349	6078	5	65.730596			
100000349	6078	6	63.73752			
100000349	6078	7	57.287049			
100000349	6078	8	56.325457			
100000349	6078	9	59.3079			
100000349	6078	10	63.748993			
100000349	6079	1	299.084741	BROAD RIVER RD	NE	ST ANDREWS PKY & BROAD RIVER RD
100000349	6079	2	294.881679			
100000349	6079	3	351.775083			
100000349	6079	4	378.522555			
100000349	6079	5	322.295086			
100000349	6079	6	296.692088			
100000349	6079	7	330.092285			
100000349	6079	8	355.492445			

Node	Superlink	Run	Average Control Delay	Approach Street Name	Direction	Intersection
100000349	6079	9	278.296608			
100000349	6079	10	289.207514			
100000349	6083	1	3.260535	BROAD RIVER RD	SE	ST ANDREWS PKY & BROAD RIVER RD
100000349	6083	2	3.325513			
100000349	6083	3	2.343775			
100000349	6083	4	2.138177			
100000349	6083	5	2.971849			
100000349	6083	6	2.301386			
100000349	6083	7	2.602548			
100000349	6083	8	2.810114			
100000349	6083	9	2.977945			
100000349	6083	10	2.501473			
100000353	5104	1	15.606859	PINEY GROVE RD	W	BOWER PKY, PINEY GROVE RD & JAMIL RD
100000353	5104	2	12.821755			
100000353	5104	3	13.275328			
100000353	5104	4	16.131918			
100000353	5104	5	15.033089			
100000353	5104	6	13.770984			
100000353	5104	7	13.680167			
100000353	5104	8	14.340739			
100000353	5104	9	15.387294			
100000353	5104	10	13.247104			
100000353	6125	1	40.007302	BOWER PKY	SE	BOWER PKY, PINEY GROVE RD & JAMIL RD
100000353	6125	2	47.538003			
100000353	6125	3	47.707802			
100000353	6125	4	44.243413			
100000353	6125	5	38.524505			
100000353	6125	6	46.226459			
100000353	6125	7	46.034203			
100000353	6125	8	42.781498			
100000353	6125	9	42.670199			
100000353	6125	10	47.353448			
100000353	6126	1	25.123396	PINEY GROVE RD	E	BOWER PKY, PINEY GROVE RD & JAMIL RD
100000353	6126	2	27.236692			
100000353	6126	3	25.076062			
100000353	6126	4	26.744766			
100000353	6126	5	25.048646			
100000353	6126	6	25.773437			
100000353	6126	7	24.765727			
100000353	6126	8	23.98043			
100000353	6126	9	30.132365			
100000353	6126	10	26.154815			
100000353	6127	1	90.848413	JAMIL RD	NW	BOWER PKY, PINEY GROVE RD & JAMIL RD
100000353	6127	2	63.746058			
100000353	6127	3	83.376284			
100000353	6127	4	64.889867			
100000353	6127	5	87.328396			
100000353	6127	6	128.306548			
100000353	6127	7	170.557773			
100000353	6127	8	84.761498			
100000353	6127	9	59.084617			
100000353	6127	10	142.914777			
100000354	6095	1	14.197111	ST ANDREWS RD	SW	ST ANDREWS RD, KAY ST & CHARTWELL RD
100000354	6095	2	9.163894			
100000354	6095	3	10.613679			
100000354	6095	4	10.8771			
100000354	6095	5	16.168032			
100000354	6095	6	12.860143			
100000354	6095	7	12.02117			
100000354	6095	8	12.206522			
100000354	6095	9	11.670865			
100000354	6095	10	12.351874			
100000354	6096	1	7.734328	ST ANDREWS RD	NE	ST ANDREWS RD, KAY ST & CHARTWELL RD
100000354	6096	2	4.766244			
100000354	6096	3	7.099362			
100000354	6096	4	7.25551			
100000354	6096	5	7.463876			
100000354	6096	6	5.653904			
100000354	6096	7	6.802309			
100000354	6096	8	6.785901			
100000354	6096	9	5.898954			
100000354	6096	10	6.41544			
100000354	6098	1	24.161399	CHARTWELL RD	NW	ST ANDREWS RD, KAY ST & CHARTWELL RD
100000354	6098	2	33.792207			
100000354	6098	3	32.41498			
100000354	6098	4	32.946001			
100000354	6098	5	56.099153			
100000354	6098	6	35.385715			
100000354	6098	7	50.305633			
100000354	6098	8	29.085034			
100000354	6098	9	41.25707			
100000354	6098	10	26.209161			
100000354	6099	1	46.361249	KAY ST	SE	ST ANDREWS RD, KAY ST & CHARTWELL RD
100000354	6099	2	30.264296			
100000354	6099	3	27.614686			
100000354	6099	4	29.899528			
100000354	6099	5	32.821291			
100000354	6099	6	30.681431			
100000354	6099	7	29.973491			
100000354	6099	8	32.19693			
100000354	6099	9	35.255941			
100000354	6099	10	31.141365			
100000356	6086	1	0.384237	ST ANDREWS RD	SW	LAWRENCE ST & ST ANDREWS RD
100000356	6086	2	0.312254			
100000356	6086	3	0.356602			
100000356	6086	4	0.374643			
100000356	6086	5	0.333817			
100000356	6086	6	0.406587			
100000356	6086	7	0.392514			
100000356	6086	8	0.311918			
100000356	6086	9	0.360005			
100000356	6086	10	0.39651			
100000356	6092	1	12.165598	LAWRENCE ST	SE	LAWRENCE ST & ST ANDREWS RD
100000356	6092	2	10.36258			
100000356	6092	3	10.036644			
100000356	6092	4	12.069746			
100000356	6092	5	11.359138			
100000356	6092	6	9.599603			
100000356	6092	7	9.971553			
100000356	6092	8	10.240374			
100000356	6092	9	9.768868			
100000356	6092	10	10.598798			

Node	Superlink	Run	Average Control Delay	Approach Street Name	Direction	Intersection
100000356	6094	1	2.808251	ST ANDREWS RD	NE	LAWRENCE ST & ST ANDREWS RD
100000356	6094	2	3.176569			
100000356	6094	3	3.852499			
100000356	6094	4	2.605589			
100000356	6094	5	3.260804			
100000356	6094	6	2.678025			
100000356	6094	7	2.664688			
100000356	6094	8	3.034673			
100000356	6094	9	2.740581			
100000356	6094	10	3.178142			
100000357	6119	1	2.404493	JAMIL RD	NW	JAMIL RD & PAISLEY LN
100000357	6119	2	2.222355			
100000357	6119	3	1.624687			
100000357	6119	4	1.463315			
100000357	6119	5	2.058525			
100000357	6119	6	1.810477			
100000357	6119	7	1.614856			
100000357	6119	8	1.779874			
100000357	6119	9	1.922165			
100000357	6119	10	1.659045			
100000357	6120	1	52.962588	PAISLEY LN	NE	JAMIL RD & PAISLEY LN
100000357	6120	2	26.137461			
100000357	6120	3	23.926943			
100000357	6120	4	25.232991			
100000357	6120	5	33.677999			
100000357	6120	6	84.88199			
100000357	6120	7	58.865805			
100000357	6120	8	102.088942			
100000357	6120	9	43.400637			
100000357	6120	10	64.338038			
100000357	6121	1	1.71436	JAMIL RD	SE	JAMIL RD & PAISLEY LN
100000357	6121	2	1.114619			
100000357	6121	3	1.297379			
100000357	6121	4	1.029295			
100000357	6121	5	1.490539			
100000357	6121	6	1.584875			
100000357	6121	7	1.219551			
100000357	6121	8	1.116812			
100000357	6121	9	1.216024			
100000357	6121	10	1.499121			
100000358	5117	1	15.355496	ST ANDREWS RD	NE	ST ANDREWS RD, FERNANDINA RD & BURNING TREE RD
100000358	5117	2	16.656136			
100000358	5117	3	14.257162			
100000358	5117	4	14.45734			
100000358	5117	5	14.365577			
100000358	5117	6	13.630287			
100000358	5117	7	13.629297			
100000358	5117	8	14.378529			
100000358	5117	9	14.255186			
100000358	5117	10	13.561301			
100000358	6100	1	19.72208	ST ANDREWS RD	SW	ST ANDREWS RD, FERNANDINA RD & BURNING TREE RD
100000358	6100	2	18.99476			
100000358	6100	3	19.68484			
100000358	6100	4	19.537009			
100000358	6100	5	19.995804			
100000358	6100	6	20.334275			
100000358	6100	7	19.560393			
100000358	6100	8	20.798349			
100000358	6100	9	20.722603			
100000358	6100	10	20.329475			
100000358	6101	1	32.021792	BURNING TREE RD	NW	ST ANDREWS RD, FERNANDINA RD & BURNING TREE RD
100000358	6101	2	30.607008			
100000358	6101	3	26.765792			
100000358	6101	4	27.191132			
100000358	6101	5	36.414766			
100000358	6101	6	35.894644			
100000358	6101	7	32.406585			
100000358	6101	8	28.402535			
100000358	6101	9	26.765151			
100000358	6101	10	38.15114			
100000358	6102	1	44.790938	FERNANDINA RD	SE	ST ANDREWS RD, FERNANDINA RD & BURNING TREE RD
100000358	6102	2	51.106585			
100000358	6102	3	61.519157			
100000358	6102	4	32.985322			
100000358	6102	5	62.6793			
100000358	6102	6	66.808866			
100000358	6102	7	51.779398			
100000358	6102	8	52.326121			
100000358	6102	9	52.605475			
100000358	6102	10	61.290054			
100000360	3294	1	9.138093	EXIT 106 WB OFF RAMP	NE	EXIT 106 WB OFF RAMP & BURNING TREE RD
100000360	3294	2	9.983291			
100000360	3294	3	7.536977			
100000360	3294	4	8.251912			
100000360	3294	5	11.55017			
100000360	3294	6	11.668463			
100000360	3294	7	9.712804			
100000360	3294	8	8.301898			
100000360	3294	9	8.273177			
100000360	3294	10	15.226393			
100000360	6101	1	0.051709	BURNING TREE RD	S	EXIT 106 WB OFF RAMP & BURNING TREE RD
100000360	6101	2	0.054296			
100000360	6101	3	0.0696			
100000360	6101	4	0.026154			
100000360	6101	5	0.042798			
100000360	6101	6	0.101541			
100000360	6101	7	0.035106			
100000360	6101	8	0.069626			
100000360	6101	9	0.015888			
100000360	6101	10	0.0572			
100000360	6105	1	0.007142	BURNING TREE RD	N	EXIT 106 WB OFF RAMP & BURNING TREE RD
100000360	6105	2	0.005849			
100000360	6105	3	0.007872			
100000360	6105	4	0.011659			
100000360	6105	5	0.005121			
100000360	6105	6	0.004231			
100000360	6105	7	0.002426			
100000360	6105	8	0.005663			
100000360	6105	9	0.006316			
100000360	6105	10	0.001184			
100000362	6134	1	18.531549	JAMIL RD	NW	HARBISON BLVD & JAMIL RD
100000362	6134	2	21.937833			

Node	Superlink	Run	Average Control Delay	Approach Street Name	Direction	Intersection
100000362	6134	3	16.466573			
100000362	6134	4	17.669505			
100000362	6134	5	15.73308			
100000362	6134	6	18.147322			
100000362	6134	7	17.280936			
100000362	6134	8	17.389634			
100000362	6134	9	21.027124			
100000362	6134	10	20.109202			
100000362	6137	1	1.373257	HARBISON BLVD	NE	HARBISON BLVD & JAMIL RD
100000362	6137	2	1.074659			
100000362	6137	3	1.239837			
100000362	6137	4	1.417347			
100000362	6137	5	1.094671			
100000362	6137	6	1.145417			
100000362	6137	7	1.16279			
100000362	6137	8	1.09321			
100000362	6137	9	1.159472			
100000362	6137	10	1.40894			
100000362	6473	1	0.005352	HARBISON BLVD	SW	HARBISON BLVD & JAMIL RD
100000362	6473	2	0.009776			
100000362	6473	3	0.02337			
100000362	6473	4	0.002588			
100000362	6473	5	0.005631			
100000362	6473	6	0.002404			
100000362	6473	7	0.007424			
100000362	6473	8	0.006241			
100000362	6473	9	0.023336			
100000362	6473	10	0.001792			
100000363	6125	1	0.538666	BOWER PKY	NW	BOWER PKY & JAMIL RD
100000363	6125	2	0.547863			
100000363	6125	3	0.608482			
100000363	6125	4	0.799188			
100000363	6125	5	0.606574			
100000363	6125	6	0.754356			
100000363	6125	7	0.527338			
100000363	6125	8	0.594147			
100000363	6125	9	0.548157			
100000363	6125	10	0.625427			
100000363	6134	1	25.28642	JAMIL RD	SW	BOWER PKY & JAMIL RD
100000363	6134	2	30.990818			
100000363	6134	3	24.167136			
100000363	6134	4	27.489238			
100000363	6134	5	31.651702			
100000363	6134	6	25.701673			
100000363	6134	7	20.203169			
100000363	6134	8	29.054906			
100000363	6134	9	28.574463			
100000363	6134	10	21.885374			
100000363	6160	1	0.478832	BOWER PKY	SE	BOWER PKY & JAMIL RD
100000363	6160	2	0.441681			
100000363	6160	3	0.679125			
100000363	6160	4	0.317924			
100000363	6160	5	0.570095			
100000363	6160	6	0.518482			
100000363	6160	7	0.521134			
100000363	6160	8	0.497257			
100000363	6160	9	0.590213			
100000363	6160	10	0.447975			
100000364	6145	1	4.401823	HARBISON BLVD	SW	HARBISON BLVD & COLUMBIANA DR
100000364	6145	2	4.40526			
100000364	6145	3	3.979269			
100000364	6145	4	4.32564			
100000364	6145	5	3.747358			
100000364	6145	6	4.117431			
100000364	6145	7	3.450227			
100000364	6145	8	3.954804			
100000364	6145	9	3.913081			
100000364	6145	10	3.899759			
100000364	6176	1	2.808578	HARBISON BLVD	NE	HARBISON BLVD & COLUMBIANA DR
100000364	6176	2	3.02594			
100000364	6176	3	2.826824			
100000364	6176	4	2.839882			
100000364	6176	5	2.199493			
100000364	6176	6	2.546882			
100000364	6176	7	2.914599			
100000364	6176	8	3.245975			
100000364	6176	9	2.778949			
100000364	6176	10	3.166055			
100000364	6177	1		COLUMBIANA DR	NW	HARBISON BLVD & COLUMBIANA DR
100000364	6177	2				
100000364	6177	3				
100000364	6177	4				
100000364	6177	5				
100000364	6177	6				
100000364	6177	7				
100000364	6177	8				
100000364	6177	9				
100000364	6177	10				
100000364	6196	1	52.458148	COLUMBIANA DR	SE	HARBISON BLVD & COLUMBIANA DR
100000364	6196	2	53.436737			
100000364	6196	3	58.769472			
100000364	6196	4	57.042514			
100000364	6196	5	56.592625			
100000364	6196	6	56.274027			
100000364	6196	7	58.251116			
100000364	6196	8	52.195863			
100000364	6196	9	55.175129			
100000364	6196	10	57.738753			
100000365	6137	1	10.187925	HARBISON BLVD	SW	COLUMBIANA CIR, HARBISON BLVD & PARK TERRACE DR
100000365	6137	2	10.01249			
100000365	6137	3	9.8954			
100000365	6137	4	11.730834			
100000365	6137	5	9.008662			
100000365	6137	6	9.702684			
100000365	6137	7	10.10946			
100000365	6137	8	9.431994			
100000365	6137	9	9.888462			
100000365	6137	10	9.999338			
100000365	6140	1	53.550878	COLUMBIANA CIR	SE	COLUMBIANA CIR, HARBISON BLVD & PARK TERRACE DR
100000365	6140	2	44.659138			
100000365	6140	3	49.974241			
100000365	6140	4	48.462212			

Node	Superlink	Run	Average Control Delay	Approach Street Name	Direction	Intersection
100000365	6140	5	48.156568			
100000365	6140	6	52.814972			
100000365	6140	7	46.36634			
100000365	6140	8	47.198178			
100000365	6140	9	46.403931			
100000365	6140	10	49.62379			
100000365	6145	1	11.520049	HARBISON BLVD	NE	COLUMBIANA CIR, HARBISON BLVD & PARK TERRACE DR
100000365	6145	2	10.031054			
100000365	6145	3	10.988706			
100000365	6145	4	11.717921			
100000365	6145	5	10.731384			
100000365	6145	6	11.333033			
100000365	6145	7	10.293175			
100000365	6145	8	10.541866			
100000365	6145	9	10.133286			
100000365	6145	10	12.118609			
100000365	6151	1	48.349539	PARK TERRACE DR	NW	COLUMBIANA CIR, HARBISON BLVD & PARK TERRACE DR
100000365	6151	2	48.250558			
100000365	6151	3	43.893638			
100000365	6151	4	49.257633			
100000365	6151	5	44.833047			
100000365	6151	6	47.030731			
100000365	6151	7	44.097443			
100000365	6151	8	48.372082			
100000365	6151	9	44.778816			
100000365	6151	10	43.383179			
100000374	6151	1	42.256684	PARK TERRACE DR	S	BOWER PKY, PARK TERRACE DR & 6161 (S)
100000374	6151	2	40.587538			
100000374	6151	3	49.305058			
100000374	6151	4	40.672258			
100000374	6151	5	59.572464			
100000374	6151	6	37.152255			
100000374	6151	7	39.777469			
100000374	6151	8	56.757578			
100000374	6151	9	38.925532			
100000374	6151	10	45.420832			
100000374	6160	1	14.900981	BOWER PKY	W	BOWER PKY, PARK TERRACE DR & 6161 (S)
100000374	6160	2	14.789273			
100000374	6160	3	16.334561			
100000374	6160	4	11.963305			
100000374	6160	5	17.109251			
100000374	6160	6	15.840227			
100000374	6160	7	15.62996			
100000374	6160	8	16.114167			
100000374	6160	9	17.605057			
100000374	6160	10	15.172578			
100000374	6161	1	3.494737		N	BOWER PKY, PARK TERRACE DR & 6161 (S)
100000374	6161	2	4.037347			
100000374	6161	3	3.433383			
100000374	6161	4	4.223888			
100000374	6161	5	3.785261			
100000374	6161	6	3.325932			
100000374	6161	7	3.942735			
100000374	6161	8	3.668329			
100000374	6161	9	4.115649			
100000374	6161	10	3.500762			
100000374	6162	1		BOWER PKY	E	BOWER PKY, PARK TERRACE DR & 6161 (S)
100000374	6162	2				
100000374	6162	3				
100000374	6162	4				
100000374	6162	5				
100000374	6162	6				
100000374	6162	7				
100000374	6162	8				
100000374	6162	9				
100000374	6162	10				
100000375	6196	1	5.286143	COLUMBIANA DR	NW	COLUMBIANA DR, CROSSBOW DR & DRIVEWAY
100000375	6196	2	4.809939			
100000375	6196	3	4.565974			
100000375	6196	4	4.486778			
100000375	6196	5	4.327834			
100000375	6196	6	4.589447			
100000375	6196	7	3.566703			
100000375	6196	8	4.221217			
100000375	6196	9	3.359472			
100000375	6196	10	4.652204			
100000375	6204	1	6.817698	COLUMBIANA DR	SE	COLUMBIANA DR, CROSSBOW DR & DRIVEWAY
100000375	6204	2	4.893852			
100000375	6204	3	5.180498			
100000375	6204	4	4.397033			
100000375	6204	5	5.464892			
100000375	6204	6	4.199985			
100000375	6204	7	4.528435			
100000375	6204	8	4.194874			
100000375	6204	9	4.630979			
100000375	6204	10	5.27704			
100000375	6550	1	25.974692	CROSSBOW DR	NE	COLUMBIANA DR, CROSSBOW DR & DRIVEWAY
100000375	6550	2	21.899199			
100000375	6550	3	24.209049			
100000375	6550	4	22.098784			
100000375	6550	5	22.472445			
100000375	6550	6	23.183874			
100000375	6550	7	23.474028			
100000375	6550	8	23.09912			
100000375	6550	9	24.529154			
100000375	6550	10	27.749961			
100000375	6551	1	6.40075	DRIVEWAY	SW	COLUMBIANA DR, CROSSBOW DR & DRIVEWAY
100000375	6551	2	6.269003			
100000375	6551	3	5.963022			
100000375	6551	4	6.600422			
100000375	6551	5	7.209621			
100000375	6551	6	7.197543			
100000375	6551	7	7.194546			
100000375	6551	8	5.551687			
100000375	6551	9	6.58723			
100000375	6551	10	5.824513			
100000391	5071	1	4.779266	BROAD RIVER RD	NW	BROAD RIVER RD & COLUMBIANA DR
100000391	5071	2	5.013216			
100000391	5071	3	4.911289			
100000391	5071	4	5.358274			
100000391	5071	5	5.113992			
100000391	5071	6	4.70534			

Node	Superlink	Run	Average Control Delay	Approach Street Name	Direction	Intersection
100000391	5071	7	5.280487			
100000391	5071	8	5.26252			
100000391	5071	9	4.751723			
100000391	5071	10	5.907784			
100000391	6214	1	53.873603	COLUMBIANA DR	NE	BROAD RIVER RD & COLUMBIANA DR
100000391	6214	2	46.236736			
100000391	6214	3	56.91712			
100000391	6214	4	51.156668			
100000391	6214	5	53.397916			
100000391	6214	6	50.209047			
100000391	6214	7	60.359651			
100000391	6214	8	73.231066			
100000391	6214	9	53.466026			
100000391	6214	10	62.557396			
100000391	6224	1	8.192995	BROAD RIVER RD	SE	BROAD RIVER RD & COLUMBIANA DR
100000391	6224	2	7.914415			
100000391	6224	3	7.990537			
100000391	6224	4	7.294789			
100000391	6224	5	6.337918			
100000391	6224	6	7.754009			
100000391	6224	7	8.729391			
100000391	6224	8	8.772375			
100000391	6224	9	8.304942			
100000391	6224	10	7.978174			
100000392	6121	1	0.162712	JAMIL RD	NW	TRAM RD & JAMIL RD
100000392	6121	2	0.387545			
100000392	6121	3	0.365166			
100000392	6121	4	0.795073			
100000392	6121	5	0.045168			
100000392	6121	6	0.775181			
100000392	6121	7	0.410188			
100000392	6121	8	0.394746			
100000392	6121	9	0.82942			
100000392	6121	10	0.171185			
100000392	6127	1	0.31646	JAMIL RD	SE	TRAM RD & JAMIL RD
100000392	6127	2	0.156914			
100000392	6127	3	0.15293			
100000392	6127	4	0.209735			
100000392	6127	5	0.451576			
100000392	6127	6	0.378795			
100000392	6127	7	0.338729			
100000392	6127	8	0.274874			
100000392	6127	9	0.495838			
100000392	6127	10	0.247594			
100000392	6261	1	9.775081	TRAM RD	NE	TRAM RD & JAMIL RD
100000392	6261	2	9.19816			
100000392	6261	3	9.190338			
100000392	6261	4	8.951684			
100000392	6261	5	9.216807			
100000392	6261	6	8.785196			
100000392	6261	7	8.965648			
100000392	6261	8	9.480471			
100000392	6261	9	10.057529			
100000392	6261	10	9.098908			
100000394	6204	1	0	COLUMBIANA DR	NW	COLUMBIANA DR, COLUMBIA AVE & DRIVEWAY
100000394	6204	2	0			
100000394	6204	3	0			
100000394	6204	4	0			
100000394	6204	5	0			
100000394	6204	6	0			
100000394	6204	7	0			
100000394	6204	8	0			
100000394	6204	9	0			
100000394	6204	10	0			
100000394	6208	1	0	COLUMBIANA DR	SE	COLUMBIANA DR, COLUMBIA AVE & DRIVEWAY
100000394	6208	2	0			
100000394	6208	3	0			
100000394	6208	4	0			
100000394	6208	5	0			
100000394	6208	6	0			
100000394	6208	7	0			
100000394	6208	8	0			
100000394	6208	9	0			
100000394	6208	10	0			
100000394	6210	1		COLUMBIA AVE	NE	COLUMBIANA DR, COLUMBIA AVE & DRIVEWAY
100000394	6210	2				
100000394	6210	3				
100000394	6210	4				
100000394	6210	5				
100000394	6210	6				
100000394	6210	7				
100000394	6210	8				
100000394	6210	9				
100000394	6210	10				
100000394	6549	1		DRIVEWAY	SW	COLUMBIANA DR, COLUMBIA AVE & DRIVEWAY
100000394	6549	2				
100000394	6549	3				
100000394	6549	4				
100000394	6549	5				
100000394	6549	6				
100000394	6549	7				
100000394	6549	8				
100000394	6549	9				
100000394	6549	10				
100000395	5084	1	128.791283	LAKE MURRAY BLVD	W	LAKE MURRAY BLVD & COLUMBIANA DR
100000395	5084	2	128.63663			
100000395	5084	3	139.097582			
100000395	5084	4	133.621714			
100000395	5084	5	124.704485			
100000395	5084	6	131.363152			
100000395	5084	7	128.557984			
100000395	5084	8	131.723294			
100000395	5084	9	128.842332			
100000395	5084	10	132.447827			
100000395	6208	1	198.495628	COLUMBIANA DR	NW	LAKE MURRAY BLVD & COLUMBIANA DR
100000395	6208	2	131.057028			
100000395	6208	3	163.862109			
100000395	6208	4	221.816317			
100000395	6208	5	167.982415			
100000395	6208	6	223.428185			
100000395	6208	7	173.70418			
100000395	6208	8	185.588004			

Node	Superlink	Run	Average Control Delay	Approach Street Name	Direction	Intersection
100000395	6208	9	207.036213			
100000395	6208	10	126.236644			
100000395	6214	1	30.790855	COLUMBIANA DR	S	LAKE MURRAY BLVD & COLUMBIANA DR
100000395	6214	2	40.947385			
100000395	6214	3	28.010592			
100000395	6214	4	40.891657			
100000395	6214	5	29.473544			
100000395	6214	6	26.179394			
100000395	6214	7	35.146381			
100000395	6214	8	29.914098			
100000395	6214	9	38.407908			
100000395	6214	10	43.991932			
100000395	6215	1	51.114547	LAKE MURRAY BLVD	E	LAKE MURRAY BLVD & COLUMBIANA DR
100000395	6215	2	42.776972			
100000395	6215	3	56.590791			
100000395	6215	4	44.917963			
100000395	6215	5	44.838798			
100000395	6215	6	43.000328			
100000395	6215	7	43.114136			
100000395	6215	8	43.367216			
100000395	6215	9	57.683648			
100000395	6215	10	75.107594			
100000398	5101	1	0.23257	HARBISON BLVD	W	HARBISON BLVD & PARKRIDGE DR
100000398	5101	2	0.147773			
100000398	5101	3	0.212863			
100000398	5101	4	0.293617			
100000398	5101	5	0.211958			
100000398	5101	6	0.224397			
100000398	5101	7	0.137291			
100000398	5101	8	0.165781			
100000398	5101	9	0.249079			
100000398	5101	10	0.254633			
100000398	6267	1	9.242971	PARKRIDGE DR	SE	HARBISON BLVD & PARKRIDGE DR
100000398	6267	2	8.303547			
100000398	6267	3	10.479335			
100000398	6267	4	10.886597			
100000398	6267	5	9.152044			
100000398	6267	6	8.820459			
100000398	6267	7	9.259504			
100000398	6267	8	10.227242			
100000398	6267	9	9.349151			
100000398	6267	10	9.809992			
100000398	6268	1	3.931666	HARBISON BLVD	NE	HARBISON BLVD & PARKRIDGE DR
100000398	6268	2	3.528017			
100000398	6268	3	5.899545			
100000398	6268	4	4.789023			
100000398	6268	5	4.571629			
100000398	6268	6	4.39405			
100000398	6268	7	5.343142			
100000398	6268	8	5.305927			
100000398	6268	9	4.092111			
100000398	6268	10	4.696737			
100000399	5113	1	30.396856	PINEY GROVE RD	E	PINEY GROVE RD & FERNANDINA RD
100000399	5113	2	32.645352			
100000399	5113	3	35.80988			
100000399	5113	4	27.192862			
100000399	5113	5	30.150914			
100000399	5113	6	35.309072			
100000399	5113	7	32.928389			
100000399	5113	8	31.644543			
100000399	5113	9	28.644361			
100000399	5113	10	31.10545			
100000399	6263	1	18.97419	PINEY GROVE RD	W	PINEY GROVE RD & FERNANDINA RD
100000399	6263	2	19.06927			
100000399	6263	3	16.140151			
100000399	6263	4	16.606601			
100000399	6263	5	17.926293			
100000399	6263	6	21.958802			
100000399	6263	7	18.449351			
100000399	6263	8	17.351209			
100000399	6263	9	17.812372			
100000399	6263	10	20.550663			
100000399	6265	1	13.294635	FERNANDINA RD	SE	PINEY GROVE RD & FERNANDINA RD
100000399	6265	2	13.598404			
100000399	6265	3	12.058527			
100000399	6265	4	10.897289			
100000399	6265	5	11.486156			
100000399	6265	6	13.029108			
100000399	6265	7	12.064692			
100000399	6265	8	13.169836			
100000399	6265	9	12.821481			
100000399	6265	10	11.786276			
100000399	6266	1	60.444043	FERNANDINA RD	N	PINEY GROVE RD & FERNANDINA RD
100000399	6266	2	54.58992			
100000399	6266	3	63.83401			
100000399	6266	4	63.87557			
100000399	6266	5	54.855567			
100000399	6266	6	53.236952			
100000399	6266	7	57.261111			
100000399	6266	8	56.463458			
100000399	6266	9	52.816696			
100000399	6266	10	52.239506			
100000401	5093	1	20.020357	LAKE MURRAY BLVD	E	KINLEY RD, LAKE MURRAY BLVD & PARKRIDGE DR
100000401	5093	2	19.929159			
100000401	5093	3	19.464881			
100000401	5093	4	16.512908			
100000401	5093	5	17.700954			
100000401	5093	6	18.001235			
100000401	5093	7	19.719799			
100000401	5093	8	17.612364			
100000401	5093	9	20.608771			
100000401	5093	10	15.540433			
100000401	6276	1	219.855013	KINLEY RD	S	KINLEY RD, LAKE MURRAY BLVD & PARKRIDGE DR
100000401	6276	2	227.150892			
100000401	6276	3	460.462342			
100000401	6276	4	323.025592			
100000401	6276	5	345.546172			
100000401	6276	6	483.972553			
100000401	6276	7	250.935989			
100000401	6276	8	258.531048			
100000401	6276	9	372.88578			
100000401	6276	10	357.451854			

Node	Superlink	Run	Average Control Delay	Approach Street Name	Direction	Intersection
100000401	6313	1	242.637013	LAKE MURRAY BLVD	W	KINLEY RD, LAKE MURRAY BLVD & PARKRIDGE DR
100000401	6313	2	322.186827			
100000401	6313	3	481.804183			
100000401	6313	4	250.712142			
100000401	6313	5	340.323583			
100000401	6313	6	443.067344			
100000401	6313	7	281.607307			
100000401	6313	8	219.225438			
100000401	6313	9	392.720105			
100000401	6313	10	248.409194			
100000401	6556	1	103.249531	PARKRIDGE DR	N	KINLEY RD, LAKE MURRAY BLVD & PARKRIDGE DR
100000401	6556	2	166.335267			
100000401	6556	3	110.635425			
100000401	6556	4	84.02614			
100000401	6556	5	83.005999			
100000401	6556	6	142.354431			
100000401	6556	7	111.008944			
100000401	6556	8	61.585518			
100000401	6556	9	91.93374			
100000401	6556	10	46.499659			
100000438	2044	1	0	RAMP	SE	RAMP, SUNSET BLVD & I-20 EXIT 61 EB ON RAMP
100000438	2044	2	0			
100000438	2044	3	0			
100000438	2044	4	0			
100000438	2044	5	0			
100000438	2044	6	0			
100000438	2044	7	0			
100000438	2044	8	0			
100000438	2044	9	0			
100000438	2044	10	0			
100000438	5021	1	6.74139	SUNSET BLVD	NW	RAMP, SUNSET BLVD & I-20 EXIT 61 EB ON RAMP
100000438	5021	2	6.615194			
100000438	5021	3	6.294328			
100000438	5021	4	6.731214			
100000438	5021	5	7.52231			
100000438	5021	6	7.91728			
100000438	5021	7	6.07826			
100000438	5021	8	5.923778			
100000438	5021	9	6.829488			
100000438	5021	10	6.883761			
100000438	5023	1	0.757989	SUNSET BLVD	SE	RAMP, SUNSET BLVD & I-20 EXIT 61 EB ON RAMP
100000438	5023	2	0.618574			
100000438	5023	3	0.586577			
100000438	5023	4	0.661918			
100000438	5023	5	0.471049			
100000438	5023	6	0.430188			
100000438	5023	7	0.51929			
100000438	5023	8	0.558735			
100000438	5023	9	0.494289			
100000438	5023	10	0.439801			
100000446	2047	1	0	RAMP	S	RAMP & I-20 EXIT 63 WB ON RAMP
100000446	2047	2	0			
100000446	2047	3	0			
100000446	2047	4	0			
100000446	2047	5	0			
100000446	2047	6	0			
100000446	2047	7	0			
100000446	2047	8	0			
100000446	2047	9	0			
100000446	2047	10	0			
100000446	2059	1	0	RAMP	SW	RAMP & I-20 EXIT 63 WB ON RAMP
100000446	2059	2	0			
100000446	2059	3	0			
100000446	2059	4	0			
100000446	2059	5	0			
100000446	2059	6	0			
100000446	2059	7	0			
100000446	2059	8	0			
100000446	2059	9	0			
100000446	2059	10	0			
100000450	2060	1	0	RAMP	E	BUSH RIVER RD, RAMP & I-20 EXIT 63 EB ON RAMP
100000450	2060	2	0			
100000450	2060	3	0			
100000450	2060	4	0			
100000450	2060	5	0			
100000450	2060	6	0			
100000450	2060	7	0			
100000450	2060	8	0			
100000450	2060	9	0			
100000450	2060	10	0			
100000450	5037	1	0	BUSH RIVER RD	E	BUSH RIVER RD, RAMP & I-20 EXIT 63 EB ON RAMP
100000450	5037	2	0			
100000450	5037	3	0			
100000450	5037	4	0			
100000450	5037	5	0			
100000450	5037	6	0			
100000450	5037	7	0			
100000450	5037	8	0			
100000450	5037	9	0			
100000450	5037	10	0			
100000450	5038	1	1.192028	BUSH RIVER RD	NW	BUSH RIVER RD, RAMP & I-20 EXIT 63 EB ON RAMP
100000450	5038	2	1.090244			
100000450	5038	3	1.247748			
100000450	5038	4	1.232129			
100000450	5038	5	1.496308			
100000450	5038	6	1.714567			
100000450	5038	7	1.225566			
100000450	5038	8	1.434189			
100000450	5038	9	1.207043			
100000450	5038	10	1.028563			
100000452	2071	1	31.867651	RAMP	W	RAMP & BUSH RIVER RD
100000452	2071	2	30.550351			
100000452	2071	3	33.171616			
100000452	2071	4	30.87661			
100000452	2071	5	35.075504			
100000452	2071	6	31.423638			
100000452	2071	7	29.472391			
100000452	2071	8	32.358839			
100000452	2071	9	32.31365			
100000452	2071	10	30.668593			
100000452	5034	1	0.922991	BUSH RIVER RD	NW	RAMP & BUSH RIVER RD
100000452	5034	2	1.390536			

Node	Superlink	Run	Average Control Delay	Approach Street Name	Direction	Intersection
100000452	5034	3	1.107066			
100000452	5034	4	0.776			
100000452	5034	5	1.048242			
100000452	5034	6	0.90206			
100000452	5034	7	0.684304			
100000452	5034	8	0.97009			
100000452	5034	9	0.817379			
100000452	5034	10	1.110803			
100000452	5457	1	2.611615	BUSH RIVER RD	SE	RAMP & BUSH RIVER RD
100000452	5457	2	2.467553			
100000452	5457	3	2.748207			
100000452	5457	4	2.046874			
100000452	5457	5	3.174971			
100000452	5457	6	2.087063			
100000452	5457	7	2.091311			
100000452	5457	8	2.077493			
100000452	5457	9	2.568623			
100000452	5457	10	2.545829			
100000455	5457	1	5.28501	BUSH RIVER RD	NW	FRONTAGE RD & BUSH RIVER RD
100000455	5457	2	5.901052			
100000455	5457	3	5.645305			
100000455	5457	4	5.31861			
100000455	5457	5	5.266527			
100000455	5457	6	5.339527			
100000455	5457	7	4.983817			
100000455	5457	8	5.098941			
100000455	5457	9	5.415672			
100000455	5457	10	5.403315			
100000455	6538	1	41.987897	FRONTAGE RD	SW	FRONTAGE RD & BUSH RIVER RD
100000455	6538	2	39.235469			
100000455	6538	3	37.43251			
100000455	6538	4	38.368414			
100000455	6538	5	42.95127			
100000455	6538	6	40.867632			
100000455	6538	7	36.216845			
100000455	6538	8	38.430407			
100000455	6538	9	40.311214			
100000455	6538	10	39.428765			
100000455	6539	1	9.093401	BUSH RIVER RD	SE	FRONTAGE RD & BUSH RIVER RD
100000455	6539	2	11.648438			
100000455	6539	3	11.164005			
100000455	6539	4	9.211769			
100000455	6539	5	10.50301			
100000455	6539	6	9.065275			
100000455	6539	7	7.8085			
100000455	6539	8	8.458337			
100000455	6539	9	8.96174			
100000455	6539	10	10.199298			
100000467	3225	1		RAMP	SW	RAMP & I-126 WB ON RAMP FROM GREYSTONE BLVD
100000467	3225	2				
100000467	3225	3				
100000467	3225	4				
100000467	3225	5				
100000467	3225	6				
100000467	3225	7				
100000467	3225	8				
100000467	3225	9				
100000467	3225	10				
100000467	3238	1	0	RAMP	W	RAMP & I-126 WB ON RAMP FROM GREYSTONE BLVD
100000467	3238	2	0			
100000467	3238	3	0			
100000467	3238	4	0			
100000467	3238	5	0			
100000467	3238	6	0			
100000467	3238	7	0			
100000467	3238	8	0			
100000467	3238	9	0			
100000467	3238	10	0			
100000468	3228	1	0	EXIT 103 WB ON RAMP	NW	EXIT 103 WB ON RAMP & I-26 EXIT 103 WB ON RAMP
100000468	3228	2	0			
100000468	3228	3	0			
100000468	3228	4	0			
100000468	3228	5	0			
100000468	3228	6	0			
100000468	3228	7	0			
100000468	3228	8	0			
100000468	3228	9	0			
100000468	3228	10	0			
100000468	3241	1	0	EXIT 103 WB ON RAMP	W	EXIT 103 WB ON RAMP & I-26 EXIT 103 WB ON RAMP
100000468	3241	2	0			
100000468	3241	3	0			
100000468	3241	4	0			
100000468	3241	5	0			
100000468	3241	6	0			
100000468	3241	7	0			
100000468	3241	8	0			
100000468	3241	9	0			
100000468	3241	10	0			
100000476	3257	1	0	RAMP	N	RAMP
100000476	3257	2	0			
100000476	3257	3	0			
100000476	3257	4	0			
100000476	3257	5	0			
100000476	3257	6	0			
100000476	3257	7	0			
100000476	3257	8	0			
100000476	3257	9	0			
100000476	3257	10	0			
100000476	3262	1	0	RAMP	N	RAMP
100000476	3262	2	0			
100000476	3262	3	0			
100000476	3262	4	0			
100000476	3262	5	0			
100000476	3262	6	0			
100000476	3262	7	0			
100000476	3262	8	0			
100000476	3262	9	0			
100000476	3262	10	0			
100000494	3302	1	0	EXIT 106 WB ON RAMP	NW	EXIT 106 WB ON RAMP & I-26 EXIT 106 WB ON RAMP
100000494	3302	2	0			
100000494	3302	3	0			
100000494	3302	4	0			

Node	Superlink	Run	Average Control Delay	Approach Street Name	Direction	Intersection
100000494	3302	5	0			
100000494	3302	6	0			
100000494	3302	7	0			
100000494	3302	8	0			
100000494	3302	9	0			
100000494	3302	10	0			
100000494	3306	1	0	EXIT 106 WB ON RAMP	NW	EXIT 106 WB ON RAMP & I-26 EXIT 106 WB ON RAMP
100000494	3306	2	0			
100000494	3306	3	0			
100000494	3306	4	0			
100000494	3306	5	0			
100000494	3306	6	0			
100000494	3306	7	0			
100000494	3306	8	0			
100000494	3306	9	0			
100000494	3306	10	0			
100000497	3310	1	0	RAMP	SE	RAMP & I-26 EXIT 104 EB ON RAMP
100000497	3310	2	0			
100000497	3310	3	0			
100000497	3310	4	0			
100000497	3310	5	0			
100000497	3310	6	0			
100000497	3310	7	0			
100000497	3310	8	0			
100000497	3310	9	0			
100000497	3310	10	0			
100000497	6545	1	0	RAMP	SE	RAMP & I-26 EXIT 104 EB ON RAMP
100000497	6545	2	0			
100000497	6545	3	0			
100000497	6545	4	0			
100000497	6545	5	0			
100000497	6545	6	0			
100000497	6545	7	0			
100000497	6545	8	0			
100000497	6545	9	0			
100000497	6545	10	0			
100000503	3325	1	0	RAMP	SE	RAMP, 6472 (W) & I-26 EXIT 103 EB ON RAMP
100000503	3325	2	0			
100000503	3325	3	0			
100000503	3325	4	0			
100000503	3325	5	0			
100000503	3325	6	0			
100000503	3325	7	0			
100000503	3325	8	0			
100000503	3325	9	0			
100000503	3325	10	0			
100000503	6472	1	0		E	RAMP, 6472 (W) & I-26 EXIT 103 EB ON RAMP
100000503	6472	2	0			
100000503	6472	3	0			
100000503	6472	4	0			
100000503	6472	5	0			
100000503	6472	6	0			
100000503	6472	7	0			
100000503	6472	8	0			
100000503	6472	9	0			
100000503	6472	10	0			
100000520	3345	1		EXIT 102 WB ON RAMP	N	EXIT 102 WB ON RAMP & I-26 EXIT 102 WB ON RAMP
100000520	3345	2				
100000520	3345	3				
100000520	3345	4				
100000520	3345	5				
100000520	3345	6				
100000520	3345	7				
100000520	3345	8				
100000520	3345	9				
100000520	3345	10				
100000520	3350	1	0	EXIT 102 WB ON RAMP	N	EXIT 102 WB ON RAMP & I-26 EXIT 102 WB ON RAMP
100000520	3350	2	0			
100000520	3350	3	0			
100000520	3350	4	0			
100000520	3350	5	0			
100000520	3350	6	0			
100000520	3350	7	0			
100000520	3350	8	0			
100000520	3350	9	0			
100000520	3350	10	0			
100000523	3355	1	0	ON-RAMP from WB	S	ON-RAMP from WB, ON-RAMP from EB & I-26 EXIT 101 EB ON RAMP
100000523	3355	2	0			
100000523	3355	3	0			
100000523	3355	4	0			
100000523	3355	5	0			
100000523	3355	6	0			
100000523	3355	7	0			
100000523	3355	8	0			
100000523	3355	9	0			
100000523	3355	10	0			
100000523	3356	1	0	ON-RAMP from EB	S	ON-RAMP from WB, ON-RAMP from EB & I-26 EXIT 101 EB ON RAMP
100000523	3356	2	0			
100000523	3356	3	0			
100000523	3356	4	0			
100000523	3356	5	0			
100000523	3356	6	0			
100000523	3356	7	0			
100000523	3356	8	0			
100000523	3356	9	0			
100000523	3356	10	0			
100000528	3360	1		EXIT 101 WB ON RAMP	N	EXIT 101 WB ON RAMP & I-26 EXIT 101 WB ON RAMP
100000528	3360	2				
100000528	3360	3				
100000528	3360	4				
100000528	3360	5				
100000528	3360	6				
100000528	3360	7				
100000528	3360	8				
100000528	3360	9				
100000528	3360	10				
100000528	3364	1	0	EXIT 101 WB ON RAMP	N	EXIT 101 WB ON RAMP & I-26 EXIT 101 WB ON RAMP
100000528	3364	2	0			
100000528	3364	3	0			
100000528	3364	4	0			
100000528	3364	5	0			
100000528	3364	6	0			

Node	Superlink	Run	Average Control Delay	Approach Street Name	Direction	Intersection
100000528	3364	7	0			
100000528	3364	8	0			
100000528	3364	9	0			
100000528	3364	10	0			
100000702	4338	1	0	RAMP	SW	RAMP & I-20 EXIT 65 WB ON RAMP
100000702	4338	2	0			
100000702	4338	3	0			
100000702	4338	4	0			
100000702	4338	5	0			
100000702	4338	6	0			
100000702	4338	7	0			
100000702	4338	8	0			
100000702	4338	9	0			
100000702	4338	10	0			
100000702	4343	1	0	RAMP	SW	RAMP & I-20 EXIT 65 WB ON RAMP
100000702	4343	2	0			
100000702	4343	3	0			
100000702	4343	4	0			
100000702	4343	5	0			
100000702	4343	6	0			
100000702	4343	7	0			
100000702	4343	8	0			
100000702	4343	9	0			
100000702	4343	10	0			
100000707	5166	1	0	MONTICELLO RD	NW	MONTICELLO RD, SERVICE RD & RAMP
100000707	5166	2	0			
100000707	5166	3	0			
100000707	5166	4	0			
100000707	5166	5	0			
100000707	5166	6	0			
100000707	5166	7	0			
100000707	5166	8	0			
100000707	5166	9	0			
100000707	5166	10	0			
100000707	5168	1	0	SERVICE RD	W	MONTICELLO RD, SERVICE RD & RAMP
100000707	5168	2	0			
100000707	5168	3	0			
100000707	5168	4	0			
100000707	5168	5	0			
100000707	5168	6	0			
100000707	5168	7	0			
100000707	5168	8	0			
100000707	5168	9	0			
100000707	5168	10	0			
100000707	5174	1	0.729677	MONTICELLO RD	SE	MONTICELLO RD, SERVICE RD & RAMP
100000707	5174	2	1.015817			
100000707	5174	3	0.576864			
100000707	5174	4	0.576736			
100000707	5174	5	0.794467			
100000707	5174	6	0.872014			
100000707	5174	7	0.812204			
100000707	5174	8	0.824575			
100000707	5174	9	0.627749			
100000707	5174	10	1.181917			
100000709	4352	1	0	RAMP	S	RAMP & I-20 EXIT 68 WB ON RAMP
100000709	4352	2	0			
100000709	4352	3	0			
100000709	4352	4	0			
100000709	4352	5	0			
100000709	4352	6	0			
100000709	4352	7	0			
100000709	4352	8	0			
100000709	4352	9	0			
100000709	4352	10	0			
100000709	4353	1	0	RAMP	S	RAMP & I-20 EXIT 68 WB ON RAMP
100000709	4353	2	0			
100000709	4353	3	0			
100000709	4353	4	0			
100000709	4353	5	0			
100000709	4353	6	0			
100000709	4353	7	0			
100000709	4353	8	0			
100000709	4353	9	0			
100000709	4353	10	0			
100000710	4356	1	0	I-20 EXIT 68 WB OFF RAMP	W	I-20 EXIT 68 WB OFF RAMP & SERVICE RD
100000710	4356	2	0			
100000710	4356	3	0			
100000710	4356	4	0			
100000710	4356	5	0			
100000710	4356	6	0			
100000710	4356	7	0			
100000710	4356	8	0			
100000710	4356	9	0			
100000710	4356	10	0			
100000712	5157	1	0.078861	BUCKNER RD	NE	BUCKNER RD & RAMP
100000712	5157	2	0.098134			
100000712	5157	3	0.181395			
100000712	5157	4	0.078087			
100000712	5157	5	0.103494			
100000712	5157	6	0.077931			
100000712	5157	7	0.067669			
100000712	5157	8	0.082213			
100000712	5157	9	0.103334			
100000712	5157	10	0.061262			
100000712	5160	1	17.218192	BUCKNER RD	SW	BUCKNER RD & RAMP
100000712	5160	2	16.769751			
100000712	5160	3	16.142209			
100000712	5160	4	18.677082			
100000712	5160	5	15.009422			
100000712	5160	6	17.335027			
100000712	5160	7	14.22525			
100000712	5160	8	17.159631			
100000712	5160	9	15.233838			
100000712	5160	10	15.333256			
100000804	6261	1	17.507968	TRAM RD	SW	TRAM RD & SIDNEY RD
100000804	6261	2	18.906764			
100000804	6261	3	14.051166			
100000804	6261	4	16.359853			
100000804	6261	5	12.725731			
100000804	6261	6	16.573497			
100000804	6261	7	17.987564			
100000804	6261	8	17.074291			

Node	Superlink	Run	Average Control Delay	Approach Street Name	Direction	Intersection
100000804	6261	9	16.392725			
100000804	6261	10	19.446798			
100000804	6457	1	136.656962	SIDNEY RD	NW	TRAM RD & SIDNEY RD
100000804	6457	2	48.195164			
100000804	6457	3	138.183428			
100000804	6457	4	171.152737			
100000804	6457	5	76.606458			
100000804	6457	6	45.999087			
100000804	6457	7	120.955415			
100000804	6457	8	140.764117			
100000804	6457	9	150.48536			
100000804	6457	10	94.412919			
100000804	6458	1	1.554957	TRAM RD	NE	TRAM RD & SIDNEY RD
100000804	6458	2	2.218723			
100000804	6458	3	2.439558			
100000804	6458	4	1.696409			
100000804	6458	5	1.942834			
100000804	6458	6	1.654411			
100000804	6458	7	2.262756			
100000804	6458	8	2.436773			
100000804	6458	9	1.941072			
100000804	6458	10	1.852732			
100000882	5151	1		SERVICE RD	SW	SERVICE RD, 6449 (S) & 6448 (W)
100000882	5151	2				
100000882	5151	3				
100000882	5151	4				
100000882	5151	5				
100000882	5151	6				
100000882	5151	7				
100000882	5151	8				
100000882	5151	9				
100000882	5151	10				
100000882	6446	1	0	SERVICE RD	NE	SERVICE RD, 6449 (S) & 6448 (W)
100000882	6446	2	0			
100000882	6446	3	0			
100000882	6446	4	0			
100000882	6446	5	0			
100000882	6446	6	0			
100000882	6446	7	0			
100000882	6446	8	0			
100000882	6446	9	0			
100000882	6446	10	0			
100000882	6449	1	0		N	SERVICE RD, 6449 (S) & 6448 (W)
100000882	6449	2	0			
100000882	6449	3	0			
100000882	6449	4	0			
100000882	6449	5	0			
100000882	6449	6	0			
100000882	6449	7	0			
100000882	6449	8	0			
100000882	6449	9	0			
100000882	6449	10	0			
100000883	5148	1	0	BROAD RIVER RD	NW	BROAD RIVER RD & 6448 (E)
100000883	5148	2	0.000008			
100000883	5148	3	0			
100000883	5148	4	0			
100000883	5148	5	0			
100000883	5148	6	0			
100000883	5148	7	0			
100000883	5148	8	0			
100000883	5148	9	0.000083			
100000883	5148	10	0			
100000883	6447	1	11.819467	BROAD RIVER RD	SE	BROAD RIVER RD & 6448 (E)
100000883	6447	2	9.652521			
100000883	6447	3	7.076341			
100000883	6447	4	7.352031			
100000883	6447	5	10.382646			
100000883	6447	6	10.002515			
100000883	6447	7	9.018406			
100000883	6447	8	7.974463			
100000883	6447	9	7.419345			
100000883	6447	10	8.013883			
100000883	6448	1			W	BROAD RIVER RD & 6448 (E)
100000883	6448	2				
100000883	6448	3				
100000883	6448	4				
100000883	6448	5				
100000883	6448	6				
100000883	6448	7				
100000883	6448	8				
100000883	6448	9				
100000883	6448	10				
100000895	3229	1	0	RAMP	SW	RAMP & PINEY GROVE RD
100000895	3229	2	0			
100000895	3229	3	0			
100000895	3229	4	0			
100000895	3229	5	0			
100000895	3229	6	0			
100000895	3229	7	0			
100000895	3229	8	0			
100000895	3229	9	0			
100000895	3229	10	0			
100000895	6543	1	1.288708	PINEY GROVE RD	E	RAMP & PINEY GROVE RD
100000895	6543	2	1.273811			
100000895	6543	3	0.991979			
100000895	6543	4	1.337079			
100000895	6543	5	2.02064			
100000895	6543	6	1.295401			
100000895	6543	7	1.203508			
100000895	6543	8	1.6825			
100000895	6543	9	1.227096			
100000895	6543	10	1.132836			
100000895	6544	1	0	PINEY GROVE RD	W	RAMP & PINEY GROVE RD
100000895	6544	2	0			
100000895	6544	3	0			
100000895	6544	4	0			
100000895	6544	5	0			
100000895	6544	6	0			
100000895	6544	7	0			
100000895	6544	8	0			
100000895	6544	9	0			
100000895	6544	10	0			

Node	Superlink	Run	Average Control Delay	Approach Street Name	Direction	Intersection
100000897	3243	1	8.888498	I-126 WB OFF RAMP TO COLONIAL LIFE BLVD	NE	I-126 WB OFF RAMP TO COLONIAL LIFE BLVD, W COLONIAL LIFE BLVD, COLONIAL LIFE BLVD W & I-126 EB ON RA
100000897	3243	2	7.028221			
100000897	3243	3	8.42071			
100000897	3243	4	8.301022			
100000897	3243	5	7.205745			
100000897	3243	6	8.617292			
100000897	3243	7	7.503696			
100000897	3243	8	7.962131			
100000897	3243	9	7.672044			
100000897	3243	10	4.970425			
100000897	5134	1	15.729334	W COLONIAL LIFE BLVD	NW	I-126 WB OFF RAMP TO COLONIAL LIFE BLVD, W COLONIAL LIFE BLVD, COLONIAL LIFE BLVD W & I-126 EB ON RA
100000897	5134	2	14.854235			
100000897	5134	3	14.941788			
100000897	5134	4	15.807195			
100000897	5134	5	14.603481			
100000897	5134	6	15.467938			
100000897	5134	7	18.458757			
100000897	5134	8	12.743407			
100000897	5134	9	13.391882			
100000897	5134	10	10.79374			
100000897	6471	1	0.754709	COLONIAL LIFE BLVD W	S	I-126 WB OFF RAMP TO COLONIAL LIFE BLVD, W COLONIAL LIFE BLVD, COLONIAL LIFE BLVD W & I-126 EB ON RA
100000897	6471	2	0.761692			
100000897	6471	3	0.745156			
100000897	6471	4	0.610372			
100000897	6471	5	0.773248			
100000897	6471	6	0.658531			
100000897	6471	7	0.678584			
100000897	6471	8	0.715637			
100000897	6471	9	0.668658			
100000897	6471	10	0.666223			
100000898	51	1	247.965133	I-26 EXIT 108 EB OFF RAMP	S	I-26 EXIT 108 EB OFF RAMP, BUSH RIVER RD & RAMP
100000898	51	2	319.126812			
100000898	51	3	265.931915			
100000898	51	4	283.965294			
100000898	51	5	298.295647			
100000898	51	6	299.509404			
100000898	51	7	311.744456			
100000898	51	8	239.505534			
100000898	51	9	289.562744			
100000898	51	10	273.877138			
100000898	5130	1	21.419609	BUSH RIVER RD	N	I-26 EXIT 108 EB OFF RAMP, BUSH RIVER RD & RAMP
100000898	5130	2	31.287323			
100000898	5130	3	27.491911			
100000898	5130	4	21.943876			
100000898	5130	5	26.266561			
100000898	5130	6	16.555538			
100000898	5130	7	32.353734			

Node	Superlink	Run	Average Control Delay	Approach Street Name	Direction	Intersection
100000898	5130	8	16.872485			
100000898	5130	9	21.844962			
100000898	5130	10	19.017215			
100000898	5131	1	9.739128	BUSH RIVER RD	E	I-26 EXIT 108 EB OFF RAMP, BUSH RIVER RD & RAMP
100000898	5131	2	8.596973			
100000898	5131	3	9.977445			
100000898	5131	4	10.274809			
100000898	5131	5	9.780867			
100000898	5131	6	8.026924			
100000898	5131	7	11.336081			
100000898	5131	8	7.362272			
100000898	5131	9	8.474693			
100000898	5131	10	8.604491			
100000898	6503	1	10.273072	BUSH RIVER RD	W	I-26 EXIT 108 EB OFF RAMP, BUSH RIVER RD & RAMP
100000898	6503	2	9.793689			
100000898	6503	3	10.72404			
100000898	6503	4	10.98909			
100000898	6503	5	11.172484			
100000898	6503	6	11.936798			
100000898	6503	7	11.630302			
100000898	6503	8	11.388964			
100000898	6503	9	11.324324			
100000898	6503	10	10.349658			
100000899	3298	1	5.619797	EXIT 106 WB OFF RAMP	SE	EXIT 106 WB OFF RAMP & BURNING TREE RD
100000899	3298	2	5.629227			
100000899	3298	3	5.997469			
100000899	3298	4	6.143656			
100000899	3298	5	5.472261			
100000899	3298	6	6.626501			
100000899	3298	7	5.279338			
100000899	3298	8	5.800094			
100000899	3298	9	6.472663			
100000899	3298	10	5.506714			
100000899	6105	1	0	BURNING TREE RD	S	EXIT 106 WB OFF RAMP & BURNING TREE RD
100000899	6105	2	0			
100000899	6105	3	0			
100000899	6105	4	0			
100000899	6105	5	0			
100000899	6105	6	0			
100000899	6105	7	0			
100000899	6105	8	0			
100000899	6105	9	0			
100000899	6105	10	0			
100000899	6106	1	0	BURNING TREE RD	N	EXIT 106 WB OFF RAMP & BURNING TREE RD
100000899	6106	2	0			
100000899	6106	3	0			
100000899	6106	4	0			
100000899	6106	5	0			
100000899	6106	6	0			
100000899	6106	7	0			
100000899	6106	8	0			
100000899	6106	9	0			
100000899	6106	10	0			
100000902	4292	1	26.781956	EXIT 110 WB OFF RAMP	NE	SUNSET BLVD, EXIT 110 WB OFF RAMP & EXIT 108 WB ON RAMP
100000902	4292	2	31.810166			
100000902	4292	3	27.463433			
100000902	4292	4	23.088875			
100000902	4292	5	28.80056			
100000902	4292	6	21.777421			
100000902	4292	7	26.297045			
100000902	4292	8	26.312932			
100000902	4292	9	23.329886			
100000902	4292	10	27.543705			
100000902	4947	1	4.846664	SUNSET BLVD	W	SUNSET BLVD, EXIT 110 WB OFF RAMP & EXIT 108 WB ON RAMP
100000902	4947	2	6.123039			
100000902	4947	3	5.882064			
100000902	4947	4	5.513152			
100000902	4947	5	5.220174			
100000902	4947	6	5.371592			
100000902	4947	7	7.458355			
100000902	4947	8	5.560451			
100000902	4947	9	5.643124			
100000902	4947	10	5.344164			
100000902	4951	1	0.013157	SUNSET BLVD	E	SUNSET BLVD, EXIT 110 WB OFF RAMP & EXIT 108 WB ON RAMP
100000902	4951	2	0.014833			
100000902	4951	3	0.018715			
100000902	4951	4	0.031547			
100000902	4951	5	0.023731			
100000902	4951	6	0.017488			
100000902	4951	7	0.02308			
100000902	4951	8	0.035681			
100000902	4951	9	0.018949			
100000902	4951	10	0.018098			
100000903	4289	1	53.24679	EXIT 110 WB OFF RAMP	NW	RAMP, SUNSET BLVD, EXIT 110 WB OFF RAMP & EXIT 108 WB ON RAMP
100000903	4289	2	54.838826			
100000903	4289	3	50.621824			
100000903	4289	4	51.522271			
100000903	4289	5	50.293407			
100000903	4289	6	52.131527			
100000903	4289	7	53.976512			
100000903	4289	8	49.981654			
100000903	4289	9	50.128758			
100000903	4289	10	49.204318			
100000903	4298	1	43.974326	RAMP	SE	RAMP, SUNSET BLVD, EXIT 110 WB OFF RAMP & EXIT 108 WB ON RAMP
100000903	4298	2	42.176602			
100000903	4298	3	37.497237			
100000903	4298	4	42.436676			
100000903	4298	5	44.196161			
100000903	4298	6	43.376722			
100000903	4298	7	37.710596			
100000903	4298	8	42.311159			
100000903	4298	9	40.183741			
100000903	4298	10	38.495972			
100000903	4950	1	19.763856	SUNSET BLVD	E	RAMP, SUNSET BLVD, EXIT 110 WB OFF RAMP & EXIT 108 WB ON RAMP
100000903	4950	2	18.244516			
100000903	4950	3	19.188991			
100000903	4950	4	20.623935			
100000903	4950	5	18.960787			
100000903	4950	6	19.556103			
100000903	4950	7	18.415283			
100000903	4950	8	19.462562			
100000903	4950	9	20.298494			

Node	Superlink	Run	Average Control Delay	Approach Street Name	Direction	Intersection
100000903	4950	10	19.276835			
100000903	4951	1	16.156539	SUNSET BLVD	W	RAMP, SUNSET BLVD, EXIT 110 WB OFF RAMP & EXIT 108 WB ON RAMP
100000903	4951	2	17.204086			
100000903	4951	3	17.022901			
100000903	4951	4	17.46827			
100000903	4951	5	15.701195			
100000903	4951	6	15.91191			
100000903	4951	7	16.911996			
100000903	4951	8	17.073415			
100000903	4951	9	17.332394			
100000903	4951	10	16.044547			

2040 No-Build AM

Node	Superlink	Run	Average Control Delay	Approach Street Name	Direction	Intersection
4	5081	1	3.669287	BROAD RIVER RD	W	WESTERN LN & BROAD RIVER RD
4	5081	2	4.084377			
4	5081	3	3.452328			
4	5081	4	4.4729			
4	5081	5	3.43626			
4	5081	6	3.794515			
4	5081	7	3.340191			
4	5081	8	4.644486			
4	5081	9	3.848753			
4	5081	10	4.181383			
4	6465	1	6.793653	WESTERN LN	S	WESTERN LN & BROAD RIVER RD
4	6465	2	6.365041			
4	6465	3	7.016826			
4	6465	4	6.584901			
4	6465	5	6.579586			
4	6465	6	6.537121			
4	6465	7	6.752842			
4	6465	8	6.527694			
4	6465	9	6.586134			
4	6465	10	6.560754			
4	6466	1	4.791612	BROAD RIVER RD	E	WESTERN LN & BROAD RIVER RD
4	6466	2	4.938805			
4	6466	3	5.309273			
4	6466	4	5.094533			
4	6466	5	5.121975			
4	6466	6	4.5785			
4	6466	7	5.296047			
4	6466	8	4.783436			
4	6466	9	4.758704			
4	6466	10	4.757214			
4	6467	1	7.121773	WESTERN LN	N	WESTERN LN & BROAD RIVER RD
4	6467	2	7.094426			
4	6467	3	7.093047			
4	6467	4	8.009622			
4	6467	5	7.49505			
4	6467	6	8.033057			
4	6467	7	7.830043			
4	6467	8	7.818272			
4	6467	9	7.260993			
4	6467	10	7.139836			
11	5487	1	0	MORNINGHILL DR	N	MORNINGHILL DR & BURNETTE DR
11	5487	2	0			
11	5487	3	0			
11	5487	4	0			
11	5487	5	0			
11	5487	6	0			
11	5487	7	0			
11	5487	8	0			
11	5487	9	0			
11	5487	10	0			
11	6536	1		MORNINGHILL DR	S	MORNINGHILL DR & BURNETTE DR
11	6536	2				
11	6536	3				
11	6536	4				
11	6536	5				
11	6536	6				
11	6536	7				
11	6536	8				
11	6536	9				
11	6536	10				
11	6537	1	0	BURNETTE DR	E	MORNINGHILL DR & BURNETTE DR
11	6537	2	0			
11	6537	3	0			
11	6537	4	0			
11	6537	5	0			
11	6537	6	0			
11	6537	7	0			
11	6537	8	0			
11	6537	9	0			
11	6537	10	0			
26	5488	1	0	RAMP	S	RAMP & 6502 (NW)
26	5488	2	0			
26	5488	3	0			
26	5488	4	0			
26	5488	5	0			
26	5488	6	0			
26	5488	7	0			
26	5488	8	0			
26	5488	9	0			
26	5488	10	0			
26	6501	1	12.934632	RAMP	N	RAMP & 6502 (NW)
26	6501	2	13.186299			
26	6501	3	11.811664			
26	6501	4	11.781505			
26	6501	5	12.291603			
26	6501	6	11.428652			
26	6501	7	13.93254			
26	6501	8	13.521901			
26	6501	9	10.224434			
26	6501	10	12.634152			
26	6502	1	0		SE	RAMP & 6502 (NW)
26	6502	2	0			
26	6502	3	0			
26	6502	4	0			

Node	Superlink	Run	Average Control Delay	Approach Street Name	Direction	Intersection
26	6502	5	0			
26	6502	6	0			
26	6502	7	0			
26	6502	8	0			
26	6502	9	0			
26	6502	10	0			
28	5140	1	0	GREYSTONE BLVD	S	GREYSTONE BLVD & CANDI LN
28	5140	2	0			
28	5140	3	0			
28	5140	4	0			
28	5140	5	0			
28	5140	6	0			
28	5140	7	0			
28	5140	8	0			
28	5140	9	0			
28	5140	10	0			
28	6506	1	6.830887	GREYSTONE BLVD	W	GREYSTONE BLVD & CANDI LN
28	6506	2	6.410245			
28	6506	3	6.592754			
28	6506	4	6.30098			
28	6506	5	6.620824			
28	6506	6	6.372267			
28	6506	7	6.39434			
28	6506	8	6.074121			
28	6506	9	6.147795			
28	6506	10	6.729483			
28	6507	1		CANDI LN	E	GREYSTONE BLVD & CANDI LN
28	6507	2				
28	6507	3				
28	6507	4				
28	6507	5				
28	6507	6				
28	6507	7				
28	6507	8				
28	6507	9				
28	6507	10				
41	6518	1	3.76719	BROAD RIVER RD	NW	DUTCH SQUARE BLVD & BROAD RIVER RD
41	6518	2	2.936637			
41	6518	3	3.769331			
41	6518	4	2.414624			
41	6518	5	3.548469			
41	6518	6	2.823736			
41	6518	7	2.324855			
41	6518	8	1.792291			
41	6518	9	2.888322			
41	6518	10	2.800931			
41	6519	1	39.442664	DUTCH SQUARE BLVD	E	DUTCH SQUARE BLVD & BROAD RIVER RD
41	6519	2	38.887892			
41	6519	3	39.530782			
41	6519	4	33.633395			
41	6519	5	36.712273			
41	6519	6	37.52298			
41	6519	7	37.354197			
41	6519	8	39.609735			
41	6519	9	39.440208			
41	6519	10	35.661096			
41	6521	1	0.913147	BROAD RIVER RD	SE	DUTCH SQUARE BLVD & BROAD RIVER RD
41	6521	2	1.17955			
41	6521	3	0.847223			
41	6521	4	1.03947			
41	6521	5	1.337208			
41	6521	6	1.276886			
41	6521	7	0.858162			
41	6521	8	1.285718			
41	6521	9	0.993697			
41	6521	10	1.225601			
43	6519	1	0	DUTCH SQUARE BLVD	W	DUTCH SQUARE BLVD & 6522 (N)
43	6519	2				
43	6519	3				
43	6519	4	0			
43	6519	5				
43	6519	6				
43	6519	7				
43	6519	8				
43	6519	9				
43	6519	10				
43	6520	1	20.811615	DUTCH SQUARE BLVD	E	DUTCH SQUARE BLVD & 6522 (N)
43	6520	2	19.590095			
43	6520	3	23.06417			
43	6520	4	20.969446			
43	6520	5	21.883161			
43	6520	6	20.363243			
43	6520	7	17.418879			
43	6520	8	14.907046			
43	6520	9	18.839508			
43	6520	10	18.239908			
43	6522	1	0		SW	DUTCH SQUARE BLVD & 6522 (N)
43	6522	2	0			
43	6522	3	0			
43	6522	4	0			
43	6522	5	0			
43	6522	6	0			
43	6522	7	0			
43	6522	8	0			
43	6522	9	0			
43	6522	10	0			
46	6273	1	0	PARKRIDGE DR	NE	PARKRIDGE DR & 6555 (NE)
46	6273	2	0			
46	6273	3	0			
46	6273	4	0			
46	6273	5	0			
46	6273	6	0			
46	6273	7	0			
46	6273	8	0			
46	6273	9	0			
46	6273	10	0			
46	6555	1			SW	PARKRIDGE DR & 6555 (NE)
46	6555	2				
46	6555	3				

Node	Superlink	Run	Average Control Delay	Approach Street Name	Direction	Intersection
46	6555	4				
46	6555	5				
46	6555	6				
46	6555	7				
46	6555	8				
46	6555	9				
46	6555	10				
46	6556	1	28.560532	PARKRIDGE DR	SE	PARKRIDGE DR & 6555 (NE)
46	6556	2	22.703358			
46	6556	3	25.631848			
46	6556	4	24.420449			
46	6556	5	24.762			
46	6556	6	21.293745			
46	6556	7	21.854314			
46	6556	8	30.993588			
46	6556	9	28.436273			
46	6556	10	24.716115			
100000012	5081	1	36.660363	BROAD RIVER RD	SE	KINLEY RD
100000012	5081	2	38.403295			
100000012	5081	3	38.992209			
100000012	5081	4	35.695969			
100000012	5081	5	55.85325			
100000012	5081	6	57.04366			
100000012	5081	7	50.478545			
100000012	5081	8	33.263207			
100000012	5081	9	34.186873			
100000012	5081	10	39.017612			
100000012	6276	1	35.780961	KINLEY RD	N	KINLEY RD
100000012	6276	2	46.698579			
100000012	6276	3	44.017707			
100000012	6276	4	34.338084			
100000012	6276	5	42.270577			
100000012	6276	6	56.075937			
100000012	6276	7	49.492549			
100000012	6276	8	48.093803			
100000012	6276	9	49.988833			
100000012	6276	10	51.141129			
100000012	6307	1	216.73377	KENNERLY RD	S	KINLEY RD
100000012	6307	2	205.498741			
100000012	6307	3	222.732029			
100000012	6307	4	212.497796			
100000012	6307	5	215.133894			
100000012	6307	6	214.598952			
100000012	6307	7	211.188204			
100000012	6307	8	205.697095			
100000012	6307	9	206.336797			
100000012	6307	10	192.259769			
100000012	6308	1	25.35171	BROAD RIVER RD	NW	KINLEY RD
100000012	6308	2	24.21928			
100000012	6308	3	27.603045			
100000012	6308	4	28.183547			
100000012	6308	5	26.342848			
100000012	6308	6	25.010968			
100000012	6308	7	27.300886			
100000012	6308	8	27.132588			
100000012	6308	9	29.127886			
100000012	6308	10	26.777104			
100000025	6267	1	0	PARKRIDGE DR	NW	CLUB RD & PARKRIDGE DR
100000025	6267	2	0			
100000025	6267	3	0			
100000025	6267	4	0			
100000025	6267	5	0			
100000025	6267	6	0			
100000025	6267	7	0			
100000025	6267	8	0			
100000025	6267	9	0			
100000025	6267	10	0			
100000025	6273	1	0	PARKRIDGE DR	SE	CLUB RD & PARKRIDGE DR
100000025	6273	2	0			
100000025	6273	3	0			
100000025	6273	4	0			
100000025	6273	5	0			
100000025	6273	6	0			
100000025	6273	7	0			
100000025	6273	8	0			
100000025	6273	9	0			
100000025	6273	10	0			
100000025	6304	1		CLUB RD	S	CLUB RD & PARKRIDGE DR
100000025	6304	2				
100000025	6304	3				
100000025	6304	4				
100000025	6304	5				
100000025	6304	6				
100000025	6304	7				
100000025	6304	8				
100000025	6304	9				
100000025	6304	10				
100000037	5101	1	18.179124	HARBISON BLVD	NE	BROAD RIVER RD & HARBISON BLVD
100000037	5101	2	19.847627			
100000037	5101	3	18.964314			
100000037	5101	4	19.81886			
100000037	5101	5	20.624681			
100000037	5101	6	20.954646			
100000037	5101	7	18.363276			
100000037	5101	8	20.410767			
100000037	5101	9	19.479723			
100000037	5101	10	18.571144			
100000037	6317	1	12.52772	BROAD RIVER RD	SE	BROAD RIVER RD & HARBISON BLVD
100000037	6317	2	11.371191			
100000037	6317	3	11.849976			
100000037	6317	4	11.766016			
100000037	6317	5	12.867558			
100000037	6317	6	15.357882			
100000037	6317	7	12.26273			
100000037	6317	8	10.250847			
100000037	6317	9	11.371564			
100000037	6317	10	12.200311			
100000037	6320	1	5.212357	BROAD RIVER RD	NW	BROAD RIVER RD & HARBISON BLVD
100000037	6320	2	5.422534			
100000037	6320	3	4.878209			

Node	Superlink	Run	Average Control Delay	Approach Street Name	Direction	Intersection
100000037	6320	4	4.727249			
100000037	6320	5	4.529463			
100000037	6320	6	5.737			
100000037	6320	7	4.345088			
100000037	6320	8	5.009992			
100000037	6320	9	5.635437			
100000037	6320	10	4.58337			
100000038	6232	1	0	BROAD RIVER RD	NW	BROAD RIVER RD & 6311 (S)
100000038	6232	2	0			
100000038	6232	3	0			
100000038	6232	4	0			
100000038	6232	5	0			
100000038	6232	6	0			
100000038	6232	7	0			
100000038	6232	8	0			
100000038	6232	9	0			
100000038	6232	10	0			
100000038	6311	1	5.322813		N	BROAD RIVER RD & 6311 (S)
100000038	6311	2	10.073665			
100000038	6311	3	17.347988			
100000038	6311	4	5.20909			
100000038	6311	5	14.657183			
100000038	6311	6	3.574841			
100000038	6311	7	9.724176			
100000038	6311	8	3.458295			
100000038	6311	9	6.235752			
100000038	6311	10	27.058842			
100000038	6312	1	0.078794	BROAD RIVER RD	SE	BROAD RIVER RD & 6311 (S)
100000038	6312	2	0			
100000038	6312	3	0			
100000038	6312	4	0.005424			
100000038	6312	5	0			
100000038	6312	6	0			
100000038	6312	7	0			
100000038	6312	8	0			
100000038	6312	9	0			
100000038	6312	10	0			
100000041	6281	1	0	LAKE MURRAY BLVD	W	LAKE MURRAY BLVD & 6311 (N)
100000041	6281	2	0			
100000041	6281	3	0			
100000041	6281	4	0			
100000041	6281	5	0			
100000041	6281	6	0			
100000041	6281	7	0			
100000041	6281	8	0			
100000041	6281	9	0			
100000041	6281	10	0			
100000041	6311	1	4.964755		SW	LAKE MURRAY BLVD & 6311 (N)
100000041	6311	2				
100000041	6311	3				
100000041	6311	4				
100000041	6311	5				
100000041	6311	6				
100000041	6311	7				
100000041	6311	8				
100000041	6311	9				
100000041	6311	10				
100000041	6313	1	0.108325	LAKE MURRAY BLVD	E	LAKE MURRAY BLVD & 6311 (N)
100000041	6313	2	0.027971			
100000041	6313	3	0.041584			
100000041	6313	4	0.156641			
100000041	6313	5	0.030854			
100000041	6313	6	0.012565			
100000041	6313	7	0.077311			
100000041	6313	8	0.027368			
100000041	6313	9	0.030222			
100000041	6313	10	0.01234			
100000046	5511	1	28.483497	BUSH RIVER RD	E	BUSH RIVER RD
100000046	5511	2	29.462125			
100000046	5511	3	28.802486			
100000046	5511	4	27.32895			
100000046	5511	5	32.780682			
100000046	5511	6	28.635825			
100000046	5511	7	27.621336			
100000046	5511	8	28.888571			
100000046	5511	9	29.366469			
100000046	5511	10	28.322698			
100000046	6323	1	323.59871	BROAD RIVER RD	NW	BUSH RIVER RD
100000046	6323	2	355.568206			
100000046	6323	3	357.163123			
100000046	6323	4	325.257204			
100000046	6323	5	289.166862			
100000046	6323	6	354.855403			
100000046	6323	7	210.476414			
100000046	6323	8	261.836963			
100000046	6323	9	339.896213			
100000046	6323	10	248.241037			
100000046	6324	1	64.997316	ELM ABODE TER	SW	BUSH RIVER RD
100000046	6324	2	55.448649			
100000046	6324	3	109.492618			
100000046	6324	4	124.298079			
100000046	6324	5	102.676013			
100000046	6324	6	73.958185			
100000046	6324	7	74.433754			
100000046	6324	8	55.379891			
100000046	6324	9	63.788091			
100000046	6324	10	78.414731			
100000046	6518	1	24.573181	BROAD RIVER RD	SE	BUSH RIVER RD
100000046	6518	2	22.948954			
100000046	6518	3	29.406212			
100000046	6518	4	24.987198			
100000046	6518	5	28.16662			
100000046	6518	6	29.704228			
100000046	6518	7	25.371543			
100000046	6518	8	30.015036			
100000046	6518	9	22.40859			
100000046	6518	10	30.805506			
100000049	6318	1	81.816074	LOST CREEK DR	S	LOST CREEK DR
100000049	6318	2	75.218834			
100000049	6318	3	78.60835			

Node	Superlink	Run	Average Control Delay	Approach Street Name	Direction	Intersection
100000049	6318	4	77.407965			
100000049	6318	5	77.599102			
100000049	6318	6	81.361632			
100000049	6318	7	83.056896			
100000049	6318	8	75.237274			
100000049	6318	9	77.584383			
100000049	6318	10	83.312939			
100000049	6319	1	19.571005	PINEY WOODS RD	N	LOST CREEK DR
100000049	6319	2	17.776644			
100000049	6319	3	19.606844			
100000049	6319	4	19.180558			
100000049	6319	5	17.258076			
100000049	6319	6	19.8807			
100000049	6319	7	22.042355			
100000049	6319	8	17.415468			
100000049	6319	9	17.544621			
100000049	6319	10	20.322028			
100000049	6320	1	13.167576	BROAD RIVER RD	SE	LOST CREEK DR
100000049	6320	2	12.231441			
100000049	6320	3	12.550337			
100000049	6320	4	12.794144			
100000049	6320	5	13.558893			
100000049	6320	6	14.814254			
100000049	6320	7	11.662911			
100000049	6320	8	9.643033			
100000049	6320	9	12.434224			
100000049	6320	10	12.459693			
100000049	6322	1	7.372376	BROAD RIVER RD	NW	LOST CREEK DR
100000049	6322	2	7.470843			
100000049	6322	3	7.932162			
100000049	6322	4	7.466232			
100000049	6322	5	7.684949			
100000049	6322	6	7.78425			
100000049	6322	7	8.580916			
100000049	6322	8	8.507713			
100000049	6322	9	8.936715			
100000049	6322	10	7.603116			
100000068	6321	1	11.196756	PINEY GROVE RD	E	BROAD RIVER RD & PINEY GROVE RD
100000068	6321	2	12.460156			
100000068	6321	3	12.635162			
100000068	6321	4	13.725089			
100000068	6321	5	14.067352			
100000068	6321	6	13.853073			
100000068	6321	7	15.620199			
100000068	6321	8	16.520099			
100000068	6321	9	16.702127			
100000068	6321	10	13.347532			
100000068	6322	1	2.377723	BROAD RIVER RD	SE	BROAD RIVER RD & PINEY GROVE RD
100000068	6322	2	3.525217			
100000068	6322	3	3.016124			
100000068	6322	4	3.034435			
100000068	6322	5	3.279833			
100000068	6322	6	3.071729			
100000068	6322	7	2.318788			
100000068	6322	8	3.342806			
100000068	6322	9	2.743835			
100000068	6322	10	3.078676			
100000068	6357	1	3.336046	BROAD RIVER RD	NW	BROAD RIVER RD & PINEY GROVE RD
100000068	6357	2	3.426508			
100000068	6357	3	4.23118			
100000068	6357	4	5.360071			
100000068	6357	5	4.658594			
100000068	6357	6	3.250486			
100000068	6357	7	3.073925			
100000068	6357	8	3.485675			
100000068	6357	9	4.107685			
100000068	6357	10	4.540346			
100000085	6325	1	0.025399	BROAD RIVER RD	E	BROAD RIVER RD
100000085	6325	2	0.02328			
100000085	6325	3	0.061394			
100000085	6325	4	0.034164			
100000085	6325	5	0.050253			
100000085	6325	6	0.019528			
100000085	6325	7	0.043483			
100000085	6325	8	0.042123			
100000085	6325	9	0.043581			
100000085	6325	10	0.040869			
100000085	6329	1	3.100101	RT	E	BROAD RIVER RD
100000085	6329	2	3.378241			
100000085	6329	3	2.948278			
100000085	6329	4	3.938367			
100000085	6329	5	4.116965			
100000085	6329	6	3.342006			
100000085	6329	7	4.378055			
100000085	6329	8	4.310957			
100000085	6329	9	3.161568			
100000085	6329	10	3.783175			
100000085	6330	1	1.364367	BROAD RIVER RD	W	BROAD RIVER RD
100000085	6330	2	2.415547			
100000085	6330	3	5.8951			
100000085	6330	4	1.987065			
100000085	6330	5	2.308001			
100000085	6330	6	2.436262			
100000085	6330	7	3.318003			
100000085	6330	8	2.932467			
100000085	6330	9	2.468417			
100000085	6330	10	2.526873			
100000085	6331	1	4.583874	RIVERHILL CIR	W	BROAD RIVER RD
100000085	6331	2	4.766055			
100000085	6331	3	4.280951			
100000085	6331	4	6.615487			
100000085	6331	5	6.641915			
100000085	6331	6	4.863619			
100000085	6331	7	6.826051			
100000085	6331	8	6.709153			
100000085	6331	9	4.927978			
100000085	6331	10	8.139385			
100000093	4299	1	56.441332	RAMP	SW	SUNSET BLVD & RAMP
100000093	4299	2	54.218644			
100000093	4299	3	51.515087			

Node	Superlink	Run	Average Control Delay	Approach Street Name	Direction	Intersection
100000093	4299	4	55.490651			
100000093	4299	5	54.810857			
100000093	4299	6	51.738591			
100000093	4299	7	55.451263			
100000093	4299	8	53.584123			
100000093	4299	9	56.809682			
100000093	4299	10	54.220291			
100000093	4949	1	18.054488	SUNSET BLVD	E	SUNSET BLVD & RAMP
100000093	4949	2	24.180305			
100000093	4949	3	18.828991			
100000093	4949	4	15.476736			
100000093	4949	5	17.433018			
100000093	4949	6	20.368392			
100000093	4949	7	18.644981			
100000093	4949	8	20.379803			
100000093	4949	9	17.524005			
100000093	4949	10	17.003016			
100000093	4950	1	0.001263	SUNSET BLVD	W	SUNSET BLVD & RAMP
100000093	4950	2	0.002107			
100000093	4950	3	0.002635			
100000093	4950	4	0.021326			
100000093	4950	5	0.023804			
100000093	4950	6	0.001625			
100000093	4950	7	0.001952			
100000093	4950	8	0.001107			
100000093	4950	9	0.027328			
100000093	4950	10	0.002162			
100000120	5031	1	12.024357	SUNSET BLVD	W	CORLEY MILL RD
100000120	5031	2	11.585623			
100000120	5031	3	12.174694			
100000120	5031	4	10.821452			
100000120	5031	5	12.025573			
100000120	5031	6	11.462155			
100000120	5031	7	12.355689			
100000120	5031	8	11.096582			
100000120	5031	9	11.191167			
100000120	5031	10	11.736798			
100000120	5352	1	13.946269	CORLEY MILL RD	S	CORLEY MILL RD
100000120	5352	2	14.843244			
100000120	5352	3	15.823309			
100000120	5352	4	13.754419			
100000120	5352	5	13.894036			
100000120	5352	6	13.81214			
100000120	5352	7	14.668374			
100000120	5352	8	13.991808			
100000120	5352	9	13.111026			
100000120	5352	10	15.880472			
100000120	5353	1	30.873292	GINNY LN	N	CORLEY MILL RD
100000120	5353	2	35.513452			
100000120	5353	3	44.531428			
100000120	5353	4	31.861186			
100000120	5353	5	32.304233			
100000120	5353	6	31.321784			
100000120	5353	7	36.069591			
100000120	5353	8	36.042862			
100000120	5353	9	31.175995			
100000120	5353	10	36.34567			
100000120	5355	1	127.839373	SUNSET BLVD	E	CORLEY MILL RD
100000120	5355	2	154.3594			
100000120	5355	3	124.667978			
100000120	5355	4	123.225275			
100000120	5355	5	149.648381			
100000120	5355	6	113.237222			
100000120	5355	7	164.078013			
100000120	5355	8	78.037695			
100000120	5355	9	101.518229			
100000120	5355	10	119.893817			
100000134	2048	1	21.127539	RAMP	SW	SUNSET BLVD & RAMP
100000134	2048	2	23.555237			
100000134	2048	3	23.99869			
100000134	2048	4	25.666383			
100000134	2048	5	25.632905			
100000134	2048	6	24.604618			
100000134	2048	7	24.668767			
100000134	2048	8	23.178347			
100000134	2048	9	24.302121			
100000134	2048	10	23.461617			
100000134	5027	1	5.796631	SUNSET BLVD	NW	SUNSET BLVD & RAMP
100000134	5027	2	7.160019			
100000134	5027	3	6.90333			
100000134	5027	4	6.970519			
100000134	5027	5	5.862344			
100000134	5027	6	5.889349			
100000134	5027	7	7.327447			
100000134	5027	8	5.972894			
100000134	5027	9	4.999216			
100000134	5027	10	6.434503			
100000134	5030	1	7.731397	SUNSET BLVD	SE	SUNSET BLVD & RAMP
100000134	5030	2	10.734158			
100000134	5030	3	10.888807			
100000134	5030	4	12.186597			
100000134	5030	5	10.539033			
100000134	5030	6	7.756904			
100000134	5030	7	10.135417			
100000134	5030	8	8.521508			
100000134	5030	9	9.672227			
100000134	5030	10	10.474211			
100000135	2039	1	13.161695	I-20 EB OFF-RAMP	NE	SUNSET BLVD & I-20 EB OFF-RAMP
100000135	2039	2	12.386856			
100000135	2039	3	12.805583			
100000135	2039	4	13.256092			
100000135	2039	5	13.173389			
100000135	2039	6	11.646911			
100000135	2039	7	12.274463			
100000135	2039	8	12.701703			
100000135	2039	9	11.881719			
100000135	2039	10	13.261945			
100000135	5022	1	11.480069	SUNSET BLVD	SE	SUNSET BLVD & I-20 EB OFF-RAMP
100000135	5022	2	12.544826			
100000135	5022	3	10.868017			

Node	Superlink	Run	Average Control Delay	Approach Street Name	Direction	Intersection
100000135	5022	4	13.376145			
100000135	5022	5	12.432258			
100000135	5022	6	10.854829			
100000135	5022	7	11.590184			
100000135	5022	8	11.266121			
100000135	5022	9	14.060085			
100000135	5022	10	12.292871			
100000135	5023	1	5.44239	SUNSET BLVD	NW	SUNSET BLVD & I-20 EB OFF-RAMP
100000135	5023	2	5.336052			
100000135	5023	3	5.343607			
100000135	5023	4	5.284629			
100000135	5023	5	5.717804			
100000135	5023	6	6.167235			
100000135	5023	7	5.456187			
100000135	5023	8	5.156486			
100000135	5023	9	6.027699			
100000135	5023	10	6.267189			
100000136	5021	1	32.4582	SUNSET BLVD	SE	SUNSET BLVD
100000136	5021	2	34.442055			
100000136	5021	3	35.270837			
100000136	5021	4	35.417196			
100000136	5021	5	32.952692			
100000136	5021	6	31.714127			
100000136	5021	7	31.879632			
100000136	5021	8	34.092556			
100000136	5021	9	34.625301			
100000136	5021	10	34.570985			
100000136	5362	1	397.173479	CROMER RD	NE	SUNSET BLVD
100000136	5362	2	388.52443			
100000136	5362	3	381.95682			
100000136	5362	4	383.2382			
100000136	5362	5	444.452954			
100000136	5362	6	420.46685			
100000136	5362	7	348.586026			
100000136	5362	8	425.729691			
100000136	5362	9	385.557558			
100000136	5362	10	429.826595			
100000136	5364	1	84.723766	SUNSET BLVD	NW	SUNSET BLVD
100000136	5364	2	84.282383			
100000136	5364	3	56.948638			
100000136	5364	4	86.272597			
100000136	5364	5	93.918406			
100000136	5364	6	79.62681			
100000136	5364	7	81.030535			
100000136	5364	8	65.630221			
100000136	5364	9	85.082174			
100000136	5364	10	71.163751			
100000136	6459	1	11.554698	DAVEGA DR	SW	SUNSET BLVD
100000136	6459	2	19.906081			
100000136	6459	3	19.908368			
100000136	6459	4	21.527401			
100000136	6459	5	20.227868			
100000136	6459	6	19.38058			
100000136	6459	7	17.332347			
100000136	6459	8	12.338649			
100000136	6459	9	12.274323			
100000136	6459	10	16.169118			
100000138	2052	1	0	RAMP	NW	RAMP
100000138	2052	2	0			
100000138	2052	3	0			
100000138	2052	4	0			
100000138	2052	5	0			
100000138	2052	6	0			
100000138	2052	7	0			
100000138	2052	8	0			
100000138	2052	9	0			
100000138	2052	10	0			
100000138	5030	1	0	SUNSET BLVD	NW	RAMP
100000138	5030	2	0			
100000138	5030	3	0			
100000138	5030	4	0			
100000138	5030	5	0			
100000138	5030	6	0			
100000138	5030	7	0			
100000138	5030	8	0			
100000138	5030	9	0			
100000138	5030	10	0			
100000138	6553	1	20.483038	SUNSET BLVD	SE	RAMP
100000138	6553	2	31.241477			
100000138	6553	3	31.965081			
100000138	6553	4	41.304043			
100000138	6553	5	30.326224			
100000138	6553	6	20.480435			
100000138	6553	7	28.262287			
100000138	6553	8	24.579296			
100000138	6553	9	27.614396			
100000138	6553	10	30.398463			
100000139	2065	1	27.809858	RAMP	S	RAMP & BUSH RIVER RD
100000139	2065	2	36.469902			
100000139	2065	3	32.558733			
100000139	2065	4	29.307812			
100000139	2065	5	32.552486			
100000139	2065	6	29.577636			
100000139	2065	7	31.446313			
100000139	2065	8	23.226053			
100000139	2065	9	35.156792			
100000139	2065	10	30.659823			
100000139	5033	1	12.634436	BUSH RIVER RD	NW	RAMP & BUSH RIVER RD
100000139	5033	2	14.580521			
100000139	5033	3	11.767737			
100000139	5033	4	12.478895			
100000139	5033	5	11.115315			
100000139	5033	6	9.898142			
100000139	5033	7	11.857951			
100000139	5033	8	13.624693			
100000139	5033	9	10.64889			
100000139	5033	10	12.325521			
100000139	5034	1	7.956919	BUSH RIVER RD	SE	RAMP & BUSH RIVER RD
100000139	5034	2	8.104185			
100000139	5034	3	8.01845			

Node	Superlink	Run	Average Control Delay	Approach Street Name	Direction	Intersection
100000139	5034	4	8.669877			
100000139	5034	5	7.466122			
100000139	5034	6	7.027314			
100000139	5034	7	7.866412			
100000139	5034	8	8.58575			
100000139	5034	9	7.731253			
100000139	5034	10	8.258221			
100000140	5376	1	9.655279	SUNSET BLVD	W	SUMMER PLACE DR
100000140	5376	2	14.52217			
100000140	5376	3	10.482727			
100000140	5376	4	13.374726			
100000140	5376	5	10.518342			
100000140	5376	6	11.60168			
100000140	5376	7	11.435203			
100000140	5376	8	9.378193			
100000140	5376	9	10.233965			
100000140	5376	10	13.320102			
100000140	5378	1	49.000717	SUMMER PLACE DR	N	SUMMER PLACE DR
100000140	5378	2	44.875923			
100000140	5378	3	43.716402			
100000140	5378	4	45.809335			
100000140	5378	5	46.27098			
100000140	5378	6	44.659529			
100000140	5378	7	44.265787			
100000140	5378	8	43.771304			
100000140	5378	9	46.283684			
100000140	5378	10	44.43316			
100000140	6489	1		FAIRLANE DR	S	SUMMER PLACE DR
100000140	6489	2				
100000140	6489	3				
100000140	6489	4				
100000140	6489	5				
100000140	6489	6				
100000140	6489	7				
100000140	6489	8				
100000140	6489	9				
100000140	6489	10				
100000140	6764	1	9.743394	SUNSET BLVD	E	SUMMER PLACE DR
100000140	6764	2	10.941672			
100000140	6764	3	9.381138			
100000140	6764	4	9.963618			
100000140	6764	5	9.306964			
100000140	6764	6	7.840586			
100000140	6764	7	10.387764			
100000140	6764	8	8.872006			
100000140	6764	9	9.475265			
100000140	6764	10	9.944259			
100000142	2053	1	12.701307	RAMP	NE	BUSH RIVER RD & RAMP
100000142	2053	2	9.350116			
100000142	2053	3	11.84023			
100000142	2053	4	13.210314			
100000142	2053	5	10.819407			
100000142	2053	6	11.291947			
100000142	2053	7	10.192148			
100000142	2053	8	11.913574			
100000142	2053	9	12.041096			
100000142	2053	10	11.087424			
100000142	5036	1	2.875747	BUSH RIVER RD	SE	BUSH RIVER RD & RAMP
100000142	5036	2	3.469294			
100000142	5036	3	3.877994			
100000142	5036	4	2.405042			
100000142	5036	5	4.199982			
100000142	5036	6	4.791818			
100000142	5036	7	4.388194			
100000142	5036	8	3.281311			
100000142	5036	9	4.239463			
100000142	5036	10	3.078219			
100000142	5037	1	6.801565	BUSH RIVER RD	NW	BUSH RIVER RD & RAMP
100000142	5037	2	8.271407			
100000142	5037	3	8.870978			
100000142	5037	4	8.055926			
100000142	5037	5	7.734082			
100000142	5037	6	8.962564			
100000142	5037	7	8.202273			
100000142	5037	8	9.072853			
100000142	5037	9	8.232129			
100000142	5037	10	8.111247			
100000143	5372	1	0	SUNSET BLVD	E	SUNSET BLVD & HEBRON DR
100000143	5372	2	0			
100000143	5372	3	0			
100000143	5372	4	0			
100000143	5372	5	0			
100000143	5372	6	0			
100000143	5372	7	0			
100000143	5372	8	0			
100000143	5372	9	0			
100000143	5372	10	0			
100000143	6763	1		HEBRON DR	N	SUNSET BLVD & HEBRON DR
100000143	6763	2				
100000143	6763	3				
100000143	6763	4				
100000143	6763	5				
100000143	6763	6				
100000143	6763	7				
100000143	6763	8				
100000143	6763	9				
100000143	6763	10				
100000143	6764	1	0	SUNSET BLVD	W	SUNSET BLVD & HEBRON DR
100000143	6764	2	0			
100000143	6764	3	0			
100000143	6764	4	0			
100000143	6764	5	0			
100000143	6764	6	0			
100000143	6764	7	0			
100000143	6764	8	0			
100000143	6764	9	0			
100000143	6764	10	0			
100000144	5376	1	4.50987	SUNSET BLVD	E	SUNSET BLVD
100000144	5376	2	15.926067			
100000144	5376	3	9.956101			

Node	Superlink	Run	Average Control Delay	Approach Street Name	Direction	Intersection
100000144	5376	4	8.07362			
100000144	5376	5	8.468662			
100000144	5376	6	10.430739			
100000144	5376	7	8.438887			
100000144	5376	8	15.009944			
100000144	5376	9	6.323797			
100000144	5376	10	4.348199			
100000144	6760	1	57.633694	W. HOSPTIAL DR	S	SUNSET BLVD
100000144	6760	2	69.149509			
100000144	6760	3	60.146841			
100000144	6760	4	54.051125			
100000144	6760	5	60.742453			
100000144	6760	6	59.678929			
100000144	6760	7	61.800613			
100000144	6760	8	57.01166			
100000144	6760	9	58.311481			
100000144	6760	10	55.588425			
100000144	6761	1		SUNSET CT	N	SUNSET BLVD
100000144	6761	2				
100000144	6761	3				
100000144	6761	4				
100000144	6761	5				
100000144	6761	6				
100000144	6761	7				
100000144	6761	8				
100000144	6761	9				
100000144	6761	10				
100000144	6762	1	19.698346	SUNSET BLVD	W	SUNSET BLVD
100000144	6762	2	25.029666			
100000144	6762	3	22.460347			
100000144	6762	4	23.476853			
100000144	6762	5	24.600034			
100000144	6762	6	21.434156			
100000144	6762	7	26.541021			
100000144	6762	8	24.128714			
100000144	6762	9	20.57762			
100000144	6762	10	22.543572			
100000150	3361	1	17.229772	I-26 EXIT 101 EB OFF RAMP	SW	I-26 EXIT 101 EB OFF RAMP & BROAD RIVER RD
100000150	3361	2	20.381202			
100000150	3361	3	21.764945			
100000150	3361	4	20.796916			
100000150	3361	5	20.302917			
100000150	3361	6	17.102931			
100000150	3361	7	20.26629			
100000150	3361	8	16.778226			
100000150	3361	9	17.481079			
100000150	3361	10	20.80137			
100000150	5071	1	0	BROAD RIVER RD	E	I-26 EXIT 101 EB OFF RAMP & BROAD RIVER RD
100000150	5071	2	0			
100000150	5071	3	0			
100000150	5071	4	0			
100000150	5071	5	0			
100000150	5071	6	0			
100000150	5071	7	0			
100000150	5071	8	0			
100000150	5071	9	0			
100000150	5071	10	0			
100000150	5073	1	0.049507	BROAD RIVER RD	W	I-26 EXIT 101 EB OFF RAMP & BROAD RIVER RD
100000150	5073	2	0.048294			
100000150	5073	3	0.035433			
100000150	5073	4	0.05034			
100000150	5073	5	0.03702			
100000150	5073	6	0.048434			
100000150	5073	7	0.039902			
100000150	5073	8	0.040485			
100000150	5073	9	0.056208			
100000150	5073	10	0.033057			
100000151	5072	1	0.382998	BROAD RIVER RD	E	BROAD RIVER RD & ON-RAMP from WB
100000151	5072	2	0.398408			
100000151	5072	3	0.654338			
100000151	5072	4	0.553399			
100000151	5072	5	0.747793			
100000151	5072	6	0.539795			
100000151	5072	7	0.492098			
100000151	5072	8	0.571683			
100000151	5072	9	0.681948			
100000151	5072	10	0.541663			
100000151	5075	1	3.282413	BROAD RIVER RD	W	BROAD RIVER RD & ON-RAMP from WB
100000151	5075	2	2.669448			
100000151	5075	3	4.006632			
100000151	5075	4	3.729017			
100000151	5075	5	3.983574			
100000151	5075	6	3.934544			
100000151	5075	7	2.976244			
100000151	5075	8	3.717601			
100000151	5075	9	3.706184			
100000151	5075	10	2.767417			
100000155	6084	1	4.280481	BROAD RIVER RD	N	BEATTY RD & BROAD RIVER RD
100000155	6084	2	4.650009			
100000155	6084	3	4.547393			
100000155	6084	4	3.21341			
100000155	6084	5	5.522375			
100000155	6084	6	7.19824			
100000155	6084	7	5.512656			
100000155	6084	8	4.487868			
100000155	6084	9	4.768575			
100000155	6084	10	4.378721			
100000155	6355	1	30.983849	BEATTY RD	E	BEATTY RD & BROAD RIVER RD
100000155	6355	2	28.684348			
100000155	6355	3	31.456908			
100000155	6355	4	27.875288			
100000155	6355	5	30.003249			
100000155	6355	6	28.08561			
100000155	6355	7	30.468532			
100000155	6355	8	25.352967			
100000155	6355	9	30.720027			
100000155	6355	10	24.206239			
100000155	6357	1	12.691197	BROAD RIVER RD	S	BEATTY RD & BROAD RIVER RD
100000155	6357	2	13.888467			
100000155	6357	3	12.361163			

Node	Superlink	Run	Average Control Delay	Approach Street Name	Direction	Intersection
100000155	6357	4	14.538786			
100000155	6357	5	15.179852			
100000155	6357	6	13.362167			
100000155	6357	7	13.235451			
100000155	6357	8	12.817712			
100000155	6357	9	12.613017			
100000155	6357	10	12.65192			
100000163	4947	1	5.307964	SUNSET BLVD	E	MCSWAIN DR
100000163	4947	2	5.206281			
100000163	4947	3	4.695235			
100000163	4947	4	6.07018			
100000163	4947	5	6.906012			
100000163	4947	6	6.210628			
100000163	4947	7	5.227942			
100000163	4947	8	5.313421			
100000163	4947	9	6.110714			
100000163	4947	10	6.327235			
100000163	5388	1	5.375811	SUNSET BLVD	W	MCSWAIN DR
100000163	5388	2	4.960754			
100000163	5388	3	4.178947			
100000163	5388	4	4.989513			
100000163	5388	5	6.002627			
100000163	5388	6	5.430109			
100000163	5388	7	4.440595			
100000163	5388	8	5.305245			
100000163	5388	9	5.346402			
100000163	5388	10	5.040221			
100000163	5389	1	22.529643	MCSWAIN DR	S	MCSWAIN DR
100000163	5389	2	17.151081			
100000163	5389	3	15.552161			
100000163	5389	4	24.875283			
100000163	5389	5	22.187095			
100000163	5389	6	20.989146			
100000163	5389	7	20.869146			
100000163	5389	8	23.904416			
100000163	5389	9	19.966586			
100000163	5389	10	20.028827			
100000163	5418	1	84.381958	CHRIS DR	N	MCSWAIN DR
100000163	5418	2	79.80489			
100000163	5418	3	82.213411			
100000163	5418	4	66.569247			
100000163	5418	5	65.684231			
100000163	5418	6	80.904353			
100000163	5418	7	85.100227			
100000163	5418	8	76.143618			
100000163	5418	9	83.343609			
100000163	5418	10	88.112859			
100000164	3354	1	0	I-26 EXIT 102 EB OFF RAMP	W	LAKE MURRAY BLVD & I-26 EXIT 102 EB OFF RAMP
100000164	3354	2	0			
100000164	3354	3	0			
100000164	3354	4	0			
100000164	3354	5	0			
100000164	3354	6	0			
100000164	3354	7	0			
100000164	3354	8	0			
100000164	3354	9	0			
100000164	3354	10	0			
100000164	5084	1	0	LAKE MURRAY BLVD	E	LAKE MURRAY BLVD & I-26 EXIT 102 EB OFF RAMP
100000164	5084	2	0			
100000164	5084	3	0			
100000164	5084	4	0			
100000164	5084	5	0			
100000164	5084	6	0			
100000164	5084	7	0			
100000164	5084	8	0			
100000164	5084	9	0			
100000164	5084	10	0			
100000164	5085	1	0.000341	LAKE MURRAY BLVD	W	LAKE MURRAY BLVD & I-26 EXIT 102 EB OFF RAMP
100000164	5085	2	0			
100000164	5085	3	0.001636			
100000164	5085	4	0.001814			
100000164	5085	5	0.000316			
100000164	5085	6	0.000527			
100000164	5085	7	0			
100000164	5085	8	0.000318			
100000164	5085	9	0			
100000164	5085	10	0.000207			
100000165	3330	1	44.050765	EXIT 103 WB OFF RAMP	SE	HARBISON BLVD
100000165	3330	2	46.214571			
100000165	3330	3	40.812446			
100000165	3330	4	43.598696			
100000165	3330	5	45.865274			
100000165	3330	6	40.353448			
100000165	3330	7	47.020457			
100000165	3330	8	50.163516			
100000165	3330	9	43.254524			
100000165	3330	10	39.232727			
100000165	5096	1	6.372936	HARBISON BLVD	NE	HARBISON BLVD
100000165	5096	2	8.049817			
100000165	5096	3	6.602267			
100000165	5096	4	10.284159			
100000165	5096	5	7.749928			
100000165	5096	6	7.040858			
100000165	5096	7	9.127176			
100000165	5096	8	7.382112			
100000165	5096	9	6.848994			
100000165	5096	10	7.326911			
100000165	5102	1	3.261967	HARBISON BLVD	SW	HARBISON BLVD
100000165	5102	2	5.591679			
100000165	5102	3	4.706111			
100000165	5102	4	4.262774			
100000165	5102	5	4.522495			
100000165	5102	6	4.218869			
100000165	5102	7	4.119837			
100000165	5102	8	4.401897			
100000165	5102	9	5.78307			
100000165	5102	10	4.087309			
100000165	5103	1	50.282527	WOODCROSS DR	NW	HARBISON BLVD
100000165	5103	2	46.349364			
100000165	5103	3	48.083722			

Node	Superlink	Run	Average Control Delay	Approach Street Name	Direction	Intersection
100000165	5103	4	47.868432			
100000165	5103	5	47.613681			
100000165	5103	6	51.519366			
100000165	5103	7	50.029875			
100000165	5103	8	52.674273			
100000165	5103	9	49.859308			
100000165	5103	10	50.567995			
100000166	3343	1	0	I-26 EXIT 102 EBL OFF RAMP	E	LAKE MURRAY BLVD & I-26 EXIT 102 EBL OFF RAMP
100000166	3343	2	0			
100000166	3343	3	0			
100000166	3343	4	0			
100000166	3343	5	0			
100000166	3343	6	0			
100000166	3343	7	0			
100000166	3343	8	0			
100000166	3343	9	0			
100000166	3343	10	0			
100000166	5087	1	0	LAKE MURRAY BLVD	E	LAKE MURRAY BLVD & I-26 EXIT 102 EBL OFF RAMP
100000166	5087	2	0			
100000166	5087	3	0			
100000166	5087	4	0			
100000166	5087	5	0			
100000166	5087	6	0			
100000166	5087	7	0			
100000166	5087	8	0			
100000166	5087	9	0			
100000166	5087	10	0			
100000166	5088	1	0	LAKE MURRAY BLVD	W	LAKE MURRAY BLVD & I-26 EXIT 102 EBL OFF RAMP
100000166	5088	2	0			
100000166	5088	3	0			
100000166	5088	4	0			
100000166	5088	5	0			
100000166	5088	6	0			
100000166	5088	7	0			
100000166	5088	8	0			
100000166	5088	9	0			
100000166	5088	10	0			
100000167	3339	1	0	I-26 EXIT 102 WBL OFF RAMP	W	I-26 EXIT 102 WBL OFF RAMP & LAKE MURRAY BLVD
100000167	3339	2	0			
100000167	3339	3	0			
100000167	3339	4	0			
100000167	3339	5	0			
100000167	3339	6	0			
100000167	3339	7	0			
100000167	3339	8	0			
100000167	3339	9	0			
100000167	3339	10	0			
100000167	5088	1	0	LAKE MURRAY BLVD	E	I-26 EXIT 102 WBL OFF RAMP & LAKE MURRAY BLVD
100000167	5088	2	0			
100000167	5088	3	0			
100000167	5088	4	0			
100000167	5088	5	0			
100000167	5088	6	0			
100000167	5088	7	0			
100000167	5088	8	0			
100000167	5088	9	0			
100000167	5088	10	0			
100000167	5090	1	0	LAKE MURRAY BLVD	W	I-26 EXIT 102 WBL OFF RAMP & LAKE MURRAY BLVD
100000167	5090	2	0			
100000167	5090	3	0			
100000167	5090	4	0			
100000167	5090	5	0			
100000167	5090	6	0			
100000167	5090	7	0			
100000167	5090	8	0			
100000167	5090	9	0			
100000167	5090	10	0			
100000168	5366	1	21.62448	LEAPHART RD	N	SUNSET BLVD & LEAPHART RD
100000168	5366	2	24.447123			
100000168	5366	3	20.810055			
100000168	5366	4	23.185042			
100000168	5366	5	26.990395			
100000168	5366	6	23.661295			
100000168	5366	7	22.186617			
100000168	5366	8	20.987922			
100000168	5366	9	23.671033			
100000168	5366	10	21.660504			
100000168	5368	1	5.259214	SUNSET BLVD	E	SUNSET BLVD & LEAPHART RD
100000168	5368	2	6.233057			
100000168	5368	3	5.136743			
100000168	5368	4	6.327365			
100000168	5368	5	6.261643			
100000168	5368	6	5.898192			
100000168	5368	7	5.859671			
100000168	5368	8	5.386167			
100000168	5368	9	6.251778			
100000168	5368	10	5.060848			
100000168	5372	1	28.523048	SUNSET BLVD	W	SUNSET BLVD & LEAPHART RD
100000168	5372	2	43.825411			
100000168	5372	3	10.6656			
100000168	5372	4	49.782602			
100000168	5372	5	93.972074			
100000168	5372	6	65.283348			
100000168	5372	7	40.774864			
100000168	5372	8	11.868232			
100000168	5372	9	59.604725			
100000168	5372	10	14.110196			
100000171	3342	1	0	I-26 EXIT 102 WB OFF RAMP	E	LAKE MURRAY BLVD & I-26 EXIT 102 WB OFF RAMP
100000171	3342	2	0			
100000171	3342	3	0			
100000171	3342	4	0			
100000171	3342	5	0			
100000171	3342	6	0			
100000171	3342	7	0			
100000171	3342	8	0			
100000171	3342	9	0			
100000171	3342	10	0			
100000171	5092	1	0.008187	LAKE MURRAY BLVD	E	LAKE MURRAY BLVD & I-26 EXIT 102 WB OFF RAMP
100000171	5092	2	0.012457			
100000171	5092	3	0.00446			

Node	Superlink	Run	Average Control Delay	Approach Street Name	Direction	Intersection
100000171	5092	4	0.009673			
100000171	5092	5	0.013956			
100000171	5092	6	0.007959			
100000171	5092	7	0.007484			
100000171	5092	8	0.004669			
100000171	5092	9	0.005749			
100000171	5092	10	0.004569			
100000171	5093	1	0	LAKE MURRAY BLVD	W	LAKE MURRAY BLVD & I-26 EXIT 102 WB OFF RAMP
100000171	5093	2	0			
100000171	5093	3	0			
100000171	5093	4	0			
100000171	5093	5	0			
100000171	5093	6	0			
100000171	5093	7	0			
100000171	5093	8	0			
100000171	5093	9	0			
100000171	5093	10	0			
100000173	3212	1	51.970871		103 SE	HARBISON BLVD
100000173	3212	2	53.29775			
100000173	3212	3	49.663197			
100000173	3212	4	60.975814			
100000173	3212	5	43.20326			
100000173	3212	6	46.815512			
100000173	3212	7	50.986258			
100000173	3212	8	41.034826			
100000173	3212	9	50.256761			
100000173	3212	10	46.286287			
100000173	3213	1	8.422716		103 S	HARBISON BLVD
100000173	3213	2	8.674786			
100000173	3213	3	8.086402			
100000173	3213	4	8.601336			
100000173	3213	5	9.605033			
100000173	3213	6	8.42267			
100000173	3213	7	8.198767			
100000173	3213	8	7.936039			
100000173	3213	9	8.107957			
100000173	3213	10	9.849601			
100000173	5097	1	3.309956	HARBISON BLVD	NE	HARBISON BLVD
100000173	5097	2	3.831376			
100000173	5097	3	3.462685			
100000173	5097	4	3.205661			
100000173	5097	5	5.693671			
100000173	5097	6	4.30626			
100000173	5097	7	3.799889			
100000173	5097	8	3.605823			
100000173	5097	9	4.381119			
100000173	5097	10	3.198088			
100000173	5099	1	5.875035	HARBISON BLVD	SW	HARBISON BLVD
100000173	5099	2	5.09997			
100000173	5099	3	6.242937			
100000173	5099	4	5.579739			
100000173	5099	5	6.524148			
100000173	5099	6	5.979043			
100000173	5099	7	7.266395			
100000173	5099	8	5.816292			
100000173	5099	9	7.30071			
100000173	5099	10	8.167141			
100000175	3234	1	42.470741	RAMP	SE	PINEY GROVE RD & RAMP
100000175	3234	2	45.498163			
100000175	3234	3	38.604459			
100000175	3234	4	41.744637			
100000175	3234	5	44.400688			
100000175	3234	6	42.777219			
100000175	3234	7	45.570498			
100000175	3234	8	40.810277			
100000175	3234	9	44.121836			
100000175	3234	10	41.573185			
100000175	5112	1	16.879345	PINEY GROVE RD	W	PINEY GROVE RD & RAMP
100000175	5112	2	12.719207			
100000175	5112	3	14.640693			
100000175	5112	4	11.017131			
100000175	5112	5	15.381348			
100000175	5112	6	22.37102			
100000175	5112	7	32.967281			
100000175	5112	8	39.17406			
100000175	5112	9	12.663569			
100000175	5112	10	31.181178			
100000175	6544	1	8.021069	PINEY GROVE RD	E	PINEY GROVE RD & RAMP
100000175	6544	2	8.334662			
100000175	6544	3	9.534238			
100000175	6544	4	7.618192			
100000175	6544	5	7.448031			
100000175	6544	6	7.150149			
100000175	6544	7	7.492705			
100000175	6544	8	7.084104			
100000175	6544	9	7.835513			
100000175	6544	10	8.337877			
100000177	5112	1	15.426903	PINEY GROVE RD	E	PINEY GROVE RD
100000177	5112	2	20.346237			
100000177	5112	3	18.287904			
100000177	5112	4	15.626122			
100000177	5112	5	16.629747			
100000177	5112	6	15.848594			
100000177	5112	7	19.111082			
100000177	5112	8	19.847334			
100000177	5112	9	19.250688			
100000177	5112	10	25.925372			
100000177	5113	1	51.20712	PINEY GROVE RD	W	PINEY GROVE RD
100000177	5113	2	46.839548			
100000177	5113	3	53.213228			
100000177	5113	4	31.551637			
100000177	5113	5	45.296796			
100000177	5113	6	39.025729			
100000177	5113	7	55.92459			
100000177	5113	8	80.50452			
100000177	5113	9	44.790129			
100000177	5113	10	66.53959			
100000177	6513	1	7.627413	EXIT 104 WB OFF RAMP	N	PINEY GROVE RD
100000177	6513	2	8.341159			
100000177	6513	3	8.005963			

Node	Superlink	Run	Average Control Delay	Approach Street Name	Direction	Intersection
100000177	6513	4	8.896572			
100000177	6513	5	7.512342			
100000177	6513	6	7.416334			
100000177	6513	7	8.993471			
100000177	6513	8	7.23442			
100000177	6513	9	8.484035			
100000177	6513	10	9.107947			
100000177	6514	1	15.153727	EXIT 104 WB OFF RAMP	N	PINEY GROVE RD
100000177	6514	2	13.859959			
100000177	6514	3	16.060754			
100000177	6514	4	15.692225			
100000177	6514	5	13.944177			
100000177	6514	6	14.227928			
100000177	6514	7	13.87963			
100000177	6514	8	14.094707			
100000177	6514	9	15.176166			
100000177	6514	10	12.039978			
100000178	3301	1	36.698932	RAMP	SE	ST ANDREWS RD
100000178	3301	2	35.631339			
100000178	3301	3	31.957907			
100000178	3301	4	30.860294			
100000178	3301	5	33.642321			
100000178	3301	6	32.030754			
100000178	3301	7	32.074524			
100000178	3301	8	34.343558			
100000178	3301	9	33.641752			
100000178	3301	10	29.897476			
100000178	5118	1	3.426165	ST ANDREWS RD	E	ST ANDREWS RD
100000178	5118	2	3.423171			
100000178	5118	3	3.165963			
100000178	5118	4	3.237556			
100000178	5118	5	3.271373			
100000178	5118	6	3.408524			
100000178	5118	7	3.161379			
100000178	5118	8	3.579635			
100000178	5118	9	3.557687			
100000178	5118	10	3.477919			
100000178	5119	1	22.812059	WOODLAND HILLS RD	N	ST ANDREWS RD
100000178	5119	2	21.673907			
100000178	5119	3	22.923782			
100000178	5119	4	24.250995			
100000178	5119	5	22.758986			
100000178	5119	6	22.050913			
100000178	5119	7	21.844402			
100000178	5119	8	22.185937			
100000178	5119	9	23.646879			
100000178	5119	10	20.860982			
100000178	5120	1	11.666761	ST ANDREWS RD	W	ST ANDREWS RD
100000178	5120	2	15.506267			
100000178	5120	3	13.533142			
100000178	5120	4	16.14561			
100000178	5120	5	11.799592			
100000178	5120	6	14.094846			
100000178	5120	7	14.139742			
100000178	5120	8	13.971493			
100000178	5120	9	12.109115			
100000178	5120	10	11.980367			
100000179	3219	1	0	RAMP	S	ST ANDREWS RD & RAMP
100000179	3219	2	0			
100000179	3219	3	0			
100000179	3219	4	0			
100000179	3219	5	0			
100000179	3219	6	0			
100000179	3219	7	0			
100000179	3219	8	0			
100000179	3219	9	0			
100000179	3219	10	0			
100000179	5116	1	30.068963	ST ANDREWS RD	E	ST ANDREWS RD & RAMP
100000179	5116	2	31.799652			
100000179	5116	3	33.217283			
100000179	5116	4	33.025858			
100000179	5116	5	35.140602			
100000179	5116	6	30.675573			
100000179	5116	7	31.359452			
100000179	5116	8	35.663918			
100000179	5116	9	31.720512			
100000179	5116	10	35.415901			
100000179	5118	1	0	ST ANDREWS RD	W	ST ANDREWS RD & RAMP
100000179	5118	2	0			
100000179	5118	3	0			
100000179	5118	4	0			
100000179	5118	5	0			
100000179	5118	6	0			
100000179	5118	7	0			
100000179	5118	8	0			
100000179	5118	9	0			
100000179	5118	10	0			
100000182	3292	1	0	EXIT 106 WB OFF RAMP	NE	ST ANDREWS RD
100000182	3292	2	0			
100000182	3292	3	0			
100000182	3292	4	0			
100000182	3292	5	0			
100000182	3292	6	0			
100000182	3292	7	0			
100000182	3292	8	0			
100000182	3292	9	0			
100000182	3292	10	0			
100000182	5123	1	0	ST ANDREWS RD	E	ST ANDREWS RD
100000182	5123	2	0			
100000182	5123	3	0			
100000182	5123	4	0			
100000182	5123	5	0			
100000182	5123	6	0			
100000182	5123	7	0			
100000182	5123	8	0			
100000182	5123	9	0			
100000182	5123	10	0			
100000182	5124	1	0	ST ANDREWS RD	SW	ST ANDREWS RD
100000182	5124	2	0			
100000182	5124	3	0			

Node	Superlink	Run	Average Control Delay	Approach Street Name	Direction	Intersection
100000182	5124	4	0			
100000182	5124	5	0			
100000182	5124	6	0			
100000182	5124	7	0			
100000182	5124	8	0			
100000182	5124	9	0			
100000182	5124	10	0			
100000184	5499	1	14.926277	N ARROWWOOD RD	S	ARROWWOOD RD
100000184	5499	2	15.384611			
100000184	5499	3	16.166694			
100000184	5499	4	16.707209			
100000184	5499	5	15.844921			
100000184	5499	6	18.299989			
100000184	5499	7	16.883326			
100000184	5499	8	17.969924			
100000184	5499	9	15.616818			
100000184	5499	10	15.24264			
100000184	5500	1	37.994839	ARROWWOOD RD	N	ARROWWOOD RD
100000184	5500	2	35.271508			
100000184	5500	3	36.019582			
100000184	5500	4	39.287191			
100000184	5500	5	34.492718			
100000184	5500	6	37.898511			
100000184	5500	7	40.155014			
100000184	5500	8	34.960072			
100000184	5500	9	37.845256			
100000184	5500	10	35.90826			
100000184	6497	1	9.571252	BUSH RIVER RD	W	ARROWWOOD RD
100000184	6497	2	8.740355			
100000184	6497	3	9.085887			
100000184	6497	4	7.998122			
100000184	6497	5	9.225334			
100000184	6497	6	9.769137			
100000184	6497	7	9.138748			
100000184	6497	8	9.880853			
100000184	6497	9	10.274839			
100000184	6497	10	9.665182			
100000184	6505	1	11.004291	BUSH RIVER RD	E	ARROWWOOD RD
100000184	6505	2	10.858343			
100000184	6505	3	12.021154			
100000184	6505	4	10.455526			
100000184	6505	5	11.812592			
100000184	6505	6	9.226489			
100000184	6505	7	10.853978			
100000184	6505	8	10.120553			
100000184	6505	9	10.414067			
100000184	6505	10	12.344073			
100000185	3230	1	24.205427	RAMP	W	GREYSTONE BLVD
100000185	3230	2	18.408389			
100000185	3230	3	22.779032			
100000185	3230	4	23.611368			
100000185	3230	5	25.585023			
100000185	3230	6	31.034209			
100000185	3230	7	16.670094			
100000185	3230	8	19.04905			
100000185	3230	9	20.169138			
100000185	3230	10	25.692104			
100000185	5140	1	0.216356	GREYSTONE BLVD	N	GREYSTONE BLVD
100000185	5140	2	0.349058			
100000185	5140	3	0.121238			
100000185	5140	4	0.248933			
100000185	5140	5	0.170971			
100000185	5140	6	0.345921			
100000185	5140	7	0.165109			
100000185	5140	8	0.107105			
100000185	5140	9	0			
100000185	5140	10	0.416838			
100000185	5141	1	0.297957	GREYSTONE BLVD	S	GREYSTONE BLVD
100000185	5141	2	0.788558			
100000185	5141	3	0.345806			
100000185	5141	4	0.66792			
100000185	5141	5	0.552055			
100000185	5141	6	0.826833			
100000185	5141	7	0.462494			
100000185	5141	8	0.545617			
100000185	5141	9	0.784223			
100000185	5141	10	0.923129			
100000186	4949	1	12.522201	SUNSET BLVD	W	HARBOR DR
100000186	4949	2	14.011233			
100000186	4949	3	9.551694			
100000186	4949	4	10.332491			
100000186	4949	5	12.100437			
100000186	4949	6	10.244918			
100000186	4949	7	11.249627			
100000186	4949	8	15.040831			
100000186	4949	9	12.925511			
100000186	4949	10	12.170851			
100000186	5386	1	169.237117	HARBOR DR	N	HARBOR DR
100000186	5386	2	246.814947			
100000186	5386	3	149.767245			
100000186	5386	4	136.968253			
100000186	5386	5	149.715186			
100000186	5386	6	165.685228			
100000186	5386	7	183.242727			
100000186	5386	8	230.287732			
100000186	5386	9	182.658251			
100000186	5386	10	168.525925			
100000186	5387	1	67.310099	E HOSPITAL DR	S	HARBOR DR
100000186	5387	2	73.61722			
100000186	5387	3	72.576151			
100000186	5387	4	60.328238			
100000186	5387	5	61.804945			
100000186	5387	6	76.221763			
100000186	5387	7	68.999691			
100000186	5387	8	83.743279			
100000186	5387	9	62.605005			
100000186	5387	10	60.008198			
100000186	6762	1	30.214514	SUNSET BLVD	E	HARBOR DR
100000186	6762	2	44.514599			
100000186	6762	3	33.094368			

Node	Superlink	Run	Average Control Delay	Approach Street Name	Direction	Intersection
100000186	6762	4	23.603819			
100000186	6762	5	26.801141			
100000186	6762	6	32.240349			
100000186	6762	7	31.498448			
100000186	6762	8	40.768486			
100000186	6762	9	22.380346			
100000186	6762	10	23.709371			
100000187	6057	1	25.031813	BROAD RIVER RD	NW	BROAD RIVER RD
100000187	6057	2	29.385681			
100000187	6057	3	24.789972			
100000187	6057	4	22.184506			
100000187	6057	5	22.942477			
100000187	6057	6	23.680311			
100000187	6057	7	26.789302			
100000187	6057	8	25.822349			
100000187	6057	9	23.734025			
100000187	6057	10	24.286713			
100000187	6059	1	41.084417	BROAD RIVER RD	SE	BROAD RIVER RD
100000187	6059	2	38.303315			
100000187	6059	3	33.559032			
100000187	6059	4	39.016536			
100000187	6059	5	37.440497			
100000187	6059	6	37.096643			
100000187	6059	7	37.755725			
100000187	6059	8	39.166873			
100000187	6059	9	39.844201			
100000187	6059	10	35.878244			
100000187	6060	1	511.463098	MARLEY DR	SW	BROAD RIVER RD
100000187	6060	2	358.359415			
100000187	6060	3	445.432885			
100000187	6060	4	376.948642			
100000187	6060	5	337.652391			
100000187	6060	6	457.889404			
100000187	6060	7	324.783472			
100000187	6060	8	581.014971			
100000187	6060	9	442.385192			
100000187	6060	10	254.137615			
100000187	6061	1	35.816641	BRIARGATE CIR	NE	BROAD RIVER RD
100000187	6061	2	39.595605			
100000187	6061	3	43.895086			
100000187	6061	4	43.227115			
100000187	6061	5	36.000476			
100000187	6061	6	37.683814			
100000187	6061	7	38.557904			
100000187	6061	8	48.063453			
100000187	6061	9	34.197186			
100000187	6061	10	41.674898			
100000188	3221	1	17.25889	RAMP	W	GREYSTONE BLVD & RAMP
100000188	3221	2	14.251144			
100000188	3221	3	15.029972			
100000188	3221	4	13.115302			
100000188	3221	5	10.60698			
100000188	3221	6	18.077381			
100000188	3221	7	18.334247			
100000188	3221	8	17.169383			
100000188	3221	9	15.538971			
100000188	3221	10	24.344009			
100000188	5143	1	0.504156	GREYSTONE BLVD	N	GREYSTONE BLVD & RAMP
100000188	5143	2	0.89586			
100000188	5143	3	0.715147			
100000188	5143	4	1.017033			
100000188	5143	5	0.414783			
100000188	5143	6	0.584676			
100000188	5143	7	0.585588			
100000188	5143	8	0.488723			
100000188	5143	9	0.716723			
100000188	5143	10	0.494983			
100000188	5144	1	0.014015	GREYSTONE BLVD	S	GREYSTONE BLVD & RAMP
100000188	5144	2	0.030364			
100000188	5144	3	0.028472			
100000188	5144	4	0.029649			
100000188	5144	5	0.039604			
100000188	5144	6	0.060603			
100000188	5144	7	0.031493			
100000188	5144	8	0.074621			
100000188	5144	9	0.048314			
100000188	5144	10	0.118317			
100000189	4346	1	46.439983	I-20 EXIT 65 WB OFF RAMP	SW	I-20 EXIT 65 WB OFF RAMP
100000189	4346	2	48.164048			
100000189	4346	3	52.79932			
100000189	4346	4	47.551846			
100000189	4346	5	48.244492			
100000189	4346	6	45.178646			
100000189	4346	7	45.880934			
100000189	4346	8	44.687662			
100000189	4346	9	51.918489			
100000189	4346	10	41.014701			
100000189	6057	1	79.22603	BROAD RIVER RD	SE	I-20 EXIT 65 WB OFF RAMP
100000189	6057	2	75.193371			
100000189	6057	3	69.179636			
100000189	6057	4	77.364519			
100000189	6057	5	77.514165			
100000189	6057	6	73.247834			
100000189	6057	7	77.729762			
100000189	6057	8	78.093817			
100000189	6057	9	78.760728			
100000189	6057	10	70.336653			
100000189	6447	1	10.955645	BROAD RIVER RD	NW	I-20 EXIT 65 WB OFF RAMP
100000189	6447	2	10.214582			
100000189	6447	3	10.363706			
100000189	6447	4	8.960695			
100000189	6447	5	11.073435			
100000189	6447	6	9.037722			
100000189	6447	7	7.993707			
100000189	6447	8	9.845755			
100000189	6447	9	9.223728			
100000189	6447	10	7.755572			
100000190	4341	1	44.673267	I-20 EXIT 65 EB OFF RAMP	E	BROAD RIVER RD
100000190	4341	2	46.382102			
100000190	4341	3	43.838345			

Node	Superlink	Run	Average Control Delay	Approach Street Name	Direction	Intersection
100000190	4341	4	43.915005			
100000190	4341	5	52.87			
100000190	4341	6	47.455307			
100000190	4341	7	48.70979			
100000190	4341	8	48.361938			
100000190	4341	9	47.490289			
100000190	4341	10	45.468118			
100000190	5148	1	1.726421	BROAD RIVER RD	SE	BROAD RIVER RD
100000190	5148	2	1.635962			
100000190	5148	3	1.6221			
100000190	5148	4	1.846072			
100000190	5148	5	1.716322			
100000190	5148	6	1.597215			
100000190	5148	7	1.695981			
100000190	5148	8	1.681938			
100000190	5148	9	1.736935			
100000190	5148	10	1.691858			
100000190	6445	1	13.58474	BROAD RIVER RD	NW	BROAD RIVER RD
100000190	6445	2	13.735447			
100000190	6445	3	14.29153			
100000190	6445	4	13.58886			
100000190	6445	5	12.399928			
100000190	6445	6	12.956504			
100000190	6445	7	14.363601			
100000190	6445	8	15.052062			
100000190	6445	9	12.986874			
100000190	6445	10	13.647963			
100000190	6446	1		SERVICE RD	SW	BROAD RIVER RD
100000190	6446	2				
100000190	6446	3				
100000190	6446	4				
100000190	6446	5				
100000190	6446	6				
100000190	6446	7				
100000190	6446	8				
100000190	6446	9				
100000190	6446	10				
100000191	5399	1	0.082774	HARBOR DR	S	HARBOR DR & OAKWOOD DR
100000191	5399	2	0.105249			
100000191	5399	3	0.031901			
100000191	5399	4	0.179893			
100000191	5399	5	0.324781			
100000191	5399	6	0			
100000191	5399	7	0.009161			
100000191	5399	8	0.001787			
100000191	5399	9	0.070893			
100000191	5399	10	0.138506			
100000191	5414	1	30.661653	OAKWOOD DR	NE	HARBOR DR & OAKWOOD DR
100000191	5414	2	36.134237			
100000191	5414	3	18.774454			
100000191	5414	4	6.491701			
100000191	5414	5	6.82492			
100000191	5414	6	6.683416			
100000191	5414	7	18.111152			
100000191	5414	8	38.82973			
100000191	5414	9	6.348297			
100000191	5414	10	10.856847			
100000191	5420	1	19.282328	HARBOR DR	N	HARBOR DR & OAKWOOD DR
100000191	5420	2	41.050734			
100000191	5420	3	19.457166			
100000191	5420	4	0.066036			
100000191	5420	5	0.070925			
100000191	5420	6	0.046988			
100000191	5420	7	0.045528			
100000191	5420	8	97.080048			
100000191	5420	9	0.043907			
100000191	5420	10	0.021767			
100000193	4350	1	32.159778	I-20 EXIT 68 EB OFF RAMP	E	BUCKNER RD
100000193	4350	2	45.260868			
100000193	4350	3	33.313126			
100000193	4350	4	37.005468			
100000193	4350	5	32.212929			
100000193	4350	6	32.282635			
100000193	4350	7	31.701927			
100000193	4350	8	38.513002			
100000193	4350	9	37.380636			
100000193	4350	10	33.345059			
100000193	5154	1	22.941068	MONTICELLO RD	N	BUCKNER RD
100000193	5154	2	21.743534			
100000193	5154	3	21.229506			
100000193	5154	4	23.707684			
100000193	5154	5	22.806375			
100000193	5154	6	20.868697			
100000193	5154	7	22.069527			
100000193	5154	8	21.813615			
100000193	5154	9	21.481425			
100000193	5154	10	23.190043			
100000193	5155	1	17.551652	MONTICELLO RD	SE	BUCKNER RD
100000193	5155	2	16.520653			
100000193	5155	3	16.541006			
100000193	5155	4	16.361941			
100000193	5155	5	16.713579			
100000193	5155	6	16.429801			
100000193	5155	7	15.553868			
100000193	5155	8	15.567197			
100000193	5155	9	18.266519			
100000193	5155	10	16.635542			
100000193	5163	1	9.693373	BUCKNER RD	SW	BUCKNER RD
100000193	5163	2	8.888066			
100000193	5163	3	10.924521			
100000193	5163	4	9.635895			
100000193	5163	5	10.600664			
100000193	5163	6	10.936704			
100000193	5163	7	10.89096			
100000193	5163	8	9.721542			
100000193	5163	9	10.372243			
100000193	5163	10	9.335373			
100000195	5150	1	4.979542	BROAD RIVER RD	SE	LONGCREEK DR & BROAD RIVER RD
100000195	5150	2	4.583904			
100000195	5150	3	4.987175			

Node	Superlink	Run	Average Control Delay	Approach Street Name	Direction	Intersection
100000195	5150	4	4.214702			
100000195	5150	5	5.491018			
100000195	5150	6	5.286231			
100000195	5150	7	4.886866			
100000195	5150	8	4.594966			
100000195	5150	9	4.825985			
100000195	5150	10	4.887737			
100000195	6049	1	5.200271	BROAD RIVER RD	NW	LONGCREEK DR & BROAD RIVER RD
100000195	6049	2	5.179983			
100000195	6049	3	6.621802			
100000195	6049	4	5.258333			
100000195	6049	5	6.70457			
100000195	6049	6	6.366502			
100000195	6049	7	5.918606			
100000195	6049	8	6.496394			
100000195	6049	9	5.57866			
100000195	6049	10	5.043459			
100000195	6052	1	14.342047	LONGCREEK DR	SW	LONGCREEK DR & BROAD RIVER RD
100000195	6052	2	14.683195			
100000195	6052	3	12.891718			
100000195	6052	4	15.01242			
100000195	6052	5	15.722436			
100000195	6052	6	16.474669			
100000195	6052	7	14.599653			
100000195	6052	8	15.517446			
100000195	6052	9	15.721452			
100000195	6052	10	14.858944			
100000196	5166	1	1.728825	MONTICELLO RD	SE	SERVICE RD
100000196	5166	2	1.852928			
100000196	5166	3	1.662882			
100000196	5166	4	1.528599			
100000196	5166	5	1.942351			
100000196	5166	6	1.955746			
100000196	5166	7	2.181769			
100000196	5166	8	1.812989			
100000196	5166	9	1.780405			
100000196	5166	10	1.462007			
100000196	5169	1	15.77181	SERVICE RD	SW	SERVICE RD
100000196	5169	2	11.590159			
100000196	5169	3	15.094389			
100000196	5169	4	16.056084			
100000196	5169	5	14.65349			
100000196	5169	6	19.689426			
100000196	5169	7	13.240354			
100000196	5169	8	13.071832			
100000196	5169	9	16.553834			
100000196	5169	10	15.517673			
100000196	5172	1	1.730602	MONTICELLO RD	NW	SERVICE RD
100000196	5172	2	1.708197			
100000196	5172	3	1.371693			
100000196	5172	4	1.463048			
100000196	5172	5	1.778472			
100000196	5172	6	1.615685			
100000196	5172	7	2.056937			
100000196	5172	8	1.784115			
100000196	5172	9	1.422726			
100000196	5172	10	1.418264			
100000198	4354	1	0	RAMP	N	RAMP & I-20 EXIT 68 EB ON RAMP
100000198	4354	2	0			
100000198	4354	3	0			
100000198	4354	4	0			
100000198	4354	5	0			
100000198	4354	6	0			
100000198	4354	7	0			
100000198	4354	8	0			
100000198	4354	9	0			
100000198	4354	10	0			
100000198	5158	1		RAMP	NW	RAMP & I-20 EXIT 68 EB ON RAMP
100000198	5158	2				
100000198	5158	3				
100000198	5158	4				
100000198	5158	5				
100000198	5158	6				
100000198	5158	7				
100000198	5158	8				
100000198	5158	9				
100000198	5158	10				
100000200	5174	1	8.756252	MONTICELLO RD	NW	MONTICELLO RD
100000200	5174	2	7.491982			
100000200	5174	3	7.731578			
100000200	5174	4	7.079236			
100000200	5174	5	7.637009			
100000200	5174	6	6.967813			
100000200	5174	7	6.955595			
100000200	5174	8	8.585981			
100000200	5174	9	7.98395			
100000200	5174	10	8.782068			
100000200	6041	1	5.98004	MONTICELLO RD	SE	MONTICELLO RD
100000200	6041	2	6.106563			
100000200	6041	3	5.235206			
100000200	6041	4	4.856279			
100000200	6041	5	5.062869			
100000200	6041	6	5.848582			
100000200	6041	7	5.842864			
100000200	6041	8	5.823549			
100000200	6041	9	5.041583			
100000200	6041	10	5.983876			
100000200	6044	1	14.12401	PEEPLES ST	NE	MONTICELLO RD
100000200	6044	2	13.428062			
100000200	6044	3	14.219152			
100000200	6044	4	13.638188			
100000200	6044	5	15.342388			
100000200	6044	6	15.895915			
100000200	6044	7	13.919791			
100000200	6044	8	15.054005			
100000200	6044	9	14.466857			
100000200	6044	10	11.42658			
100000200	6046	1	26.730194	BLUE RIDGE TER	S	MONTICELLO RD
100000200	6046	2	26.22914			
100000200	6046	3	25.635437			

Node	Superlink	Run	Average Control Delay	Approach Street Name	Direction	Intersection
100000200	6046	4	26.837449			
100000200	6046	5	25.585203			
100000200	6046	6	24.396253			
100000200	6046	7	26.459634			
100000200	6046	8	23.77576			
100000200	6046	9	27.274363			
100000200	6046	10	24.886228			
100000201	5157	1	1.656679	BUCKNER RD	SW	BUCKNER RD & TO BUCKNER ROAD
100000201	5157	2	1.364174			
100000201	5157	3	1.477983			
100000201	5157	4	1.736824			
100000201	5157	5	2.100394			
100000201	5157	6	1.480043			
100000201	5157	7	1.577102			
100000201	5157	8	1.748697			
100000201	5157	9	1.596998			
100000201	5157	10	1.72866			
100000201	5161	1	0.688601	TO BUCKNER ROAD	N	BUCKNER RD & TO BUCKNER ROAD
100000201	5161	2	2.295882			
100000201	5161	3	0.048573			
100000201	5161	4	0.058602			
100000201	5161	5	1.075859			
100000201	5161	6	0.563442			
100000201	5161	7	0			
100000201	5161	8	0.512476			
100000201	5161	9	0.016035			
100000201	5161	10	0.012			
100000201	5163	1	0.002433	BUCKNER RD	NE	BUCKNER RD & TO BUCKNER ROAD
100000201	5163	2	0.002434			
100000201	5163	3	0.004247			
100000201	5163	4	0.004568			
100000201	5163	5	0.003397			
100000201	5163	6	0.002648			
100000201	5163	7	0.004514			
100000201	5163	8	0.003506			
100000201	5163	9	0.003515			
100000201	5163	10	0.003124			
100000203	5169	1		SERVICE RD	E	SERVICE RD & MONTICELLO RD
100000203	5169	2				
100000203	5169	3				
100000203	5169	4				
100000203	5169	5				
100000203	5169	6				
100000203	5169	7				
100000203	5169	8				
100000203	5169	9				
100000203	5169	10				
100000203	5171	1		MONTICELLO RD	N	SERVICE RD & MONTICELLO RD
100000203	5171	2				
100000203	5171	3				
100000203	5171	4				
100000203	5171	5				
100000203	5171	6				
100000203	5171	7				
100000203	5171	8				
100000203	5171	9				
100000203	5171	10				
100000203	5173	1	0.367241	SERVICE RD	W	SERVICE RD & MONTICELLO RD
100000203	5173	2	0.694497			
100000203	5173	3	0.436909			
100000203	5173	4	0.335101			
100000203	5173	5	0.380621			
100000203	5173	6	0.369364			
100000203	5173	7	0.368546			
100000203	5173	8	0.554539			
100000203	5173	9	0.628113			
100000203	5173	10	0.35162			
100000250	6539	1	27.529848	BUSH RIVER RD	NW	E MEADOW CT/WOODLAND VILLAGE DR
100000250	6539	2	41.401287			
100000250	6539	3	44.490721			
100000250	6539	4	36.686303			
100000250	6539	5	32.711401			
100000250	6539	6	36.660606			
100000250	6539	7	37.016088			
100000250	6539	8	40.66532			
100000250	6539	9	23.969711			
100000250	6539	10	36.841512			
100000250	6546	1	23.817762	OUTLET POINTE BLVD	NE	E MEADOW CT/WOODLAND VILLAGE DR
100000250	6546	2	23.169105			
100000250	6546	3	28.390209			
100000250	6546	4	25.850408			
100000250	6546	5	28.408797			
100000250	6546	6	27.00709			
100000250	6546	7	20.612238			
100000250	6546	8	19.358917			
100000250	6546	9	25.633366			
100000250	6546	10	27.202172			
100000250	6547	1	27.36644	E MEADOW CT/WOODLAND VILLAGE DR	SW	E MEADOW CT/WOODLAND VILLAGE DR
100000250	6547	2	22.364426			
100000250	6547	3	22.866511			
100000250	6547	4	25.698898			
100000250	6547	5	27.863509			
100000250	6547	6	21.497805			
100000250	6547	7	19.411712			
100000250	6547	8	22.191568			
100000250	6547	9	24.204559			
100000250	6547	10	25.880381			
100000250	6548	1	35.189818	BUSH RIVER RD	SE	E MEADOW CT/WOODLAND VILLAGE DR
100000250	6548	2	41.563433			
100000250	6548	3	39.023446			
100000250	6548	4	42.010535			
100000250	6548	5	36.830176			
100000250	6548	6	40.060195			
100000250	6548	7	40.880876			
100000250	6548	8	35.7012			
100000250	6548	9	35.65869			
100000250	6548	10	38.280098			
100000252	5125	1	7.097471	BUSH RIVER RD	E	MORNINGHILL DR
100000252	5125	2	6.592178			
100000252	5125	3	6.628366			

Node	Superlink	Run	Average Control Delay	Approach Street Name	Direction	Intersection
100000252	5125	4	7.095531			
100000252	5125	5	6.587661			
100000252	5125	6	7.070317			
100000252	5125	7	6.720882			
100000252	5125	8	7.103062			
100000252	5125	9	6.78532			
100000252	5125	10	7.303385			
100000252	5487	1	84.075381	MORNINGHILL DR	S	MORNINGHILL DR
100000252	5487	2	88.437113			
100000252	5487	3	82.823354			
100000252	5487	4	82.911669			
100000252	5487	5	83.237026			
100000252	5487	6	77.45592			
100000252	5487	7	85.944376			
100000252	5487	8	83.580989			
100000252	5487	9	85.083182			
100000252	5487	10	88.837273			
100000252	5488	1	21.891141	RAMP	N	MORNINGHILL DR
100000252	5488	2	21.482787			
100000252	5488	3	20.970421			
100000252	5488	4	20.679042			
100000252	5488	5	20.946893			
100000252	5488	6	18.840177			
100000252	5488	7	22.073006			
100000252	5488	8	23.393015			
100000252	5488	9	21.293318			
100000252	5488	10	20.619946			
100000252	6505	1	28.509036	BUSH RIVER RD	W	MORNINGHILL DR
100000252	6505	2	28.075541			
100000252	6505	3	26.430246			
100000252	6505	4	24.65544			
100000252	6505	5	27.970721			
100000252	6505	6	27.593022			
100000252	6505	7	29.955512			
100000252	6505	8	27.199446			
100000252	6505	9	23.799577			
100000252	6505	10	24.207959			
100000255	5038	1	4.925964	BUSH RIVER RD	E	BUSH RIVER RD & INDEPENDENCE AVE
100000255	5038	2	4.980626			
100000255	5038	3	5.582222			
100000255	5038	4	5.02934			
100000255	5038	5	5.019891			
100000255	5038	6	4.472131			
100000255	5038	7	5.090786			
100000255	5038	8	4.868983			
100000255	5038	9	5.70912			
100000255	5038	10	4.22481			
100000255	5470	1	28.500276	INDEPENDENCE AVE	N	BUSH RIVER RD & INDEPENDENCE AVE
100000255	5470	2	34.504151			
100000255	5470	3	28.17051			
100000255	5470	4	30.59868			
100000255	5470	5	32.076529			
100000255	5470	6	32.559752			
100000255	5470	7	31.074544			
100000255	5470	8	32.300097			
100000255	5470	9	30.22109			
100000255	5470	10	33.398719			
100000255	5471	1	67.949962	BUSH RIVER RD	W	BUSH RIVER RD & INDEPENDENCE AVE
100000255	5471	2	126.932696			
100000255	5471	3	101.391888			
100000255	5471	4	116.664471			
100000255	5471	5	169.525494			
100000255	5471	6	176.097907			
100000255	5471	7	169.5278			
100000255	5471	8	113.856694			
100000255	5471	9	87.62763			
100000255	5471	10	88.967869			
100000256	5131	1	7.988859	BUSH RIVER RD	W	BUSH RIVER RD & ZIMALCREST DR
100000256	5131	2	8.454211			
100000256	5131	3	8.851805			
100000256	5131	4	7.071815			
100000256	5131	5	7.154571			
100000256	5131	6	7.053362			
100000256	5131	7	8.228677			
100000256	5131	8	7.775446			
100000256	5131	9	6.851479			
100000256	5131	10	7.055471			
100000256	5465	1	11.047592	BUSH RIVER RD	E	BUSH RIVER RD & ZIMALCREST DR
100000256	5465	2	10.701296			
100000256	5465	3	11.198807			
100000256	5465	4	11.026988			
100000256	5465	5	10.870309			
100000256	5465	6	10.667115			
100000256	5465	7	12.918762			
100000256	5465	8	10.374833			
100000256	5465	9	11.747463			
100000256	5465	10	10.087788			
100000256	5484	1	41.76394	ZIMALCREST DR	S	BUSH RIVER RD & ZIMALCREST DR
100000256	5484	2	37.8606			
100000256	5484	3	41.752055			
100000256	5484	4	49.456124			
100000256	5484	5	32.776374			
100000256	5484	6	46.214512			
100000256	5484	7	24.280371			
100000256	5484	8	35.85465			
100000256	5484	9	34.160049			
100000256	5484	10	42.926564			
100000256	5485	1	8.365163	ZIMALCREST DR	N	BUSH RIVER RD & ZIMALCREST DR
100000256	5485	2	9.802036			
100000256	5485	3	10.891722			
100000256	5485	4	8.699745			
100000256	5485	5	11.010285			
100000256	5485	6	11.62231			
100000256	5485	7	11.967505			
100000256	5485	8	12.45286			
100000256	5485	9	12.222443			
100000256	5485	10	10.05867			
100000259	5465	1	0	BUSH RIVER RD	W	NOTTINGWOOD DR & BUSH RIVER RD
100000259	5465	2	0			
100000259	5465	3	0			

Node	Superlink	Run	Average Control Delay	Approach Street Name	Direction	Intersection
100000259	5465	4	0			
100000259	5465	5	0			
100000259	5465	6	0			
100000259	5465	7	0			
100000259	5465	8	0			
100000259	5465	9	0			
100000259	5465	10	0			
100000259	5471	1	0	BUSH RIVER RD	E	NOTTINGWOOD DR & BUSH RIVER RD
100000259	5471	2	0			
100000259	5471	3	0			
100000259	5471	4	0			
100000259	5471	5	0			
100000259	5471	6	0			
100000259	5471	7	0			
100000259	5471	8	0			
100000259	5471	9	0			
100000259	5471	10	0			
100000259	5472	1		NOTTINGWOOD DR	S	NOTTINGWOOD DR & BUSH RIVER RD
100000259	5472	2				
100000259	5472	3				
100000259	5472	4				
100000259	5472	5				
100000259	5472	6				
100000259	5472	7				
100000259	5472	8				
100000259	5472	9				
100000259	5472	10				
100000262	5502	1	0.437615	BUSH RIVER RD	E	DUTCH SQUARE ENTRANCE
100000262	5502	2	0.583837			
100000262	5502	3	0.493697			
100000262	5502	4	0.66771			
100000262	5502	5	0.388447			
100000262	5502	6	0.6599			
100000262	5502	7	0.536339			
100000262	5502	8	0.367271			
100000262	5502	9	0.411803			
100000262	5502	10	0.394356			
100000262	5506	1	27.15993	COLONIAL LIFE BLVD W	N	DUTCH SQUARE ENTRANCE
100000262	5506	2	29.135162			
100000262	5506	3	27.710909			
100000262	5506	4	28.695019			
100000262	5506	5	27.076895			
100000262	5506	6	27.638473			
100000262	5506	7	26.54419			
100000262	5506	8	27.348006			
100000262	5506	9	27.806035			
100000262	5506	10	27.617122			
100000262	5509	1	58.167503	DUTCH SQUARE ENTRANCE	S	DUTCH SQUARE ENTRANCE
100000262	5509	2	53.510319			
100000262	5509	3	55.994134			
100000262	5509	4	55.752913			
100000262	5509	5	51.408688			
100000262	5509	6	63.493076			
100000262	5509	7	56.643934			
100000262	5509	8	60.444044			
100000262	5509	9	65.396266			
100000262	5509	10	59.697384			
100000262	5511	1	31.869472	BUSH RIVER RD	W	DUTCH SQUARE ENTRANCE
100000262	5511	2	21.105932			
100000262	5511	3	18.017685			
100000262	5511	4	19.858538			
100000262	5511	5	26.134967			
100000262	5511	6	21.318022			
100000262	5511	7	27.509963			
100000262	5511	8	24.438413			
100000262	5511	9	17.22877			
100000262	5511	10	18.879954			
100000263	5516	1	0.184938	COLONIAL LIFE BLVD W	N	COLONIAL LIFE BLVD W
100000263	5516	2	0.201136			
100000263	5516	3	0.208055			
100000263	5516	4	0.134929			
100000263	5516	5	0.20369			
100000263	5516	6	0.137249			
100000263	5516	7	0.173331			
100000263	5516	8	0.175942			
100000263	5516	9	0.119198			
100000263	5516	10	0.095587			
100000263	5520	1	12.420115	COLONIAL LIFE BLVD W	W	COLONIAL LIFE BLVD W
100000263	5520	2	9.604014			
100000263	5520	3	12.025061			
100000263	5520	4	10.332531			
100000263	5520	5	8.523287			
100000263	5520	6	10.249655			
100000263	5520	7	9.724089			
100000263	5520	8	11.447118			
100000263	5520	9	8.9785			
100000263	5520	10	10.416285			
100000263	6495	1	0.490827	COLONIAL LIFE BLVD W	S	COLONIAL LIFE BLVD W
100000263	6495	2	0.564272			
100000263	6495	3	0.842927			
100000263	6495	4	0.51114			
100000263	6495	5	0.590847			
100000263	6495	6	0.391183			
100000263	6495	7	0.668323			
100000263	6495	8	0.52336			
100000263	6495	9	0.409748			
100000263	6495	10	0.434057			
100000265	5139	1	15.657021	GREYSTONE BLVD	N	GREYSTONE BLVD & STONERIDGE DR
100000265	5139	2	12.379539			
100000265	5139	3	13.155876			
100000265	5139	4	13.457273			
100000265	5139	5	16.343493			
100000265	5139	6	15.178984			
100000265	5139	7	16.962412			
100000265	5139	8	16.580819			
100000265	5139	9	14.780091			
100000265	5139	10	11.913354			
100000265	5537	1	20.91805	STONERIDGE DR	W	GREYSTONE BLVD & STONERIDGE DR
100000265	5537	2	27.881363			
100000265	5537	3	26.470226			

Node	Superlink	Run	Average Control Delay	Approach Street Name	Direction	Intersection
100000265	5537	4	27.91242			
100000265	5537	5	22.504312			
100000265	5537	6	21.211141			
100000265	5537	7	27.463817			
100000265	5537	8	24.298189			
100000265	5537	9	26.799662			
100000265	5537	10	18.573116			
100000265	5556	1	17.053406	STONERIDGE DR	E	GREYSTONE BLVD & STONERIDGE DR
100000265	5556	2	14.891928			
100000265	5556	3	15.233509			
100000265	5556	4	12.659787			
100000265	5556	5	17.233727			
100000265	5556	6	14.434476			
100000265	5556	7	16.577648			
100000265	5556	8	16.653127			
100000265	5556	9	13.770602			
100000265	5556	10	14.469981			
100000265	6328	1	14.83207	GREYSTONE BLVD	S	GREYSTONE BLVD & STONERIDGE DR
100000265	6328	2	13.591916			
100000265	6328	3	15.041008			
100000265	6328	4	15.134813			
100000265	6328	5	16.483091			
100000265	6328	6	16.070057			
100000265	6328	7	17.300282			
100000265	6328	8	15.934094			
100000265	6328	9	15.044981			
100000265	6328	10	13.391143			
100000266	5545	1	60.409639	GREYSTONE BLVD	N	GREYSTONE BLVD & BROAD RIVER RD
100000266	5545	2	61.405309			
100000266	5545	3	64.995496			
100000266	5545	4	61.746917			
100000266	5545	5	65.588507			
100000266	5545	6	58.925686			
100000266	5545	7	58.45721			
100000266	5545	8	51.547017			
100000266	5545	9	60.993808			
100000266	5545	10	53.451216			
100000266	6325	1	3.770384	BROAD RIVER RD	W	GREYSTONE BLVD & BROAD RIVER RD
100000266	6325	2	4.719258			
100000266	6325	3	5.109593			
100000266	6325	4	3.97257			
100000266	6325	5	4.595669			
100000266	6325	6	4.833639			
100000266	6325	7	4.883484			
100000266	6325	8	5.04008			
100000266	6325	9	4.49529			
100000266	6325	10	4.324544			
100000266	6327	1	7.616574	BROAD RIVER RD	E	GREYSTONE BLVD & BROAD RIVER RD
100000266	6327	2	7.77912			
100000266	6327	3	8.044839			
100000266	6327	4	7.437599			
100000266	6327	5	7.466779			
100000266	6327	6	6.934274			
100000266	6327	7	8.424964			
100000266	6327	8	7.886964			
100000266	6327	9	9.017812			
100000266	6327	10	7.623598			
100000268	5565	1	31.06614	HUGER ST	N	HUGER ST & LAUREL ST
100000268	5565	2	30.208846			
100000268	5565	3	30.103322			
100000268	5565	4	30.112057			
100000268	5565	5	28.778004			
100000268	5565	6	28.922972			
100000268	5565	7	29.979481			
100000268	5565	8	30.27511			
100000268	5565	9	29.892018			
100000268	5565	10	31.93441			
100000268	5570	1	33.408606	LAUREL ST	E	HUGER ST & LAUREL ST
100000268	5570	2	33.040792			
100000268	5570	3	33.256704			
100000268	5570	4	32.441668			
100000268	5570	5	33.176636			
100000268	5570	6	33.378431			
100000268	5570	7	33.582847			
100000268	5570	8	32.727403			
100000268	5570	9	33.416673			
100000268	5570	10	33.074012			
100000268	5571	1	17.831655	HUGER ST	S	HUGER ST & LAUREL ST
100000268	5571	2	17.710893			
100000268	5571	3	17.245158			
100000268	5571	4	18.567779			
100000268	5571	5	17.946382			
100000268	5571	6	16.985913			
100000268	5571	7	17.57962			
100000268	5571	8	18.113548			
100000268	5571	9	18.581387			
100000268	5571	10	17.657478			
100000268	5581	1	49.174443	LAUREL ST	W	HUGER ST & LAUREL ST
100000268	5581	2	47.22448			
100000268	5581	3	46.155525			
100000268	5581	4	48.939522			
100000268	5581	5	47.933118			
100000268	5581	6	47.063318			
100000268	5581	7	47.713056			
100000268	5581	8	46.85133			
100000268	5581	9	46.528743			
100000268	5581	10	44.624217			
100000339	6083	1	26.89743	BROAD RIVER RD	NW	BROAD RIVER RD & ST ANDREWS RD
100000339	6083	2	22.000873			
100000339	6083	3	22.364812			
100000339	6083	4	28.518478			
100000339	6083	5	28.568177			
100000339	6083	6	25.959807			
100000339	6083	7	25.612331			
100000339	6083	8	27.342538			
100000339	6083	9	27.993328			
100000339	6083	10	27.49634			
100000339	6084	1	91.72605	BROAD RIVER RD	SE	BROAD RIVER RD & ST ANDREWS RD
100000339	6084	2	41.161608			
100000339	6084	3	48.258329			

Node	Superlink	Run	Average Control Delay	Approach Street Name	Direction	Intersection
100000339	6084	4	73.246935			
100000339	6084	5	71.761125			
100000339	6084	6	43.335041			
100000339	6084	7	65.246967			
100000339	6084	8	77.614475			
100000339	6084	9	85.634822			
100000339	6084	10	44.062191			
100000339	6085	1	67.267269	ST ANDREWS RD	SW	BROAD RIVER RD & ST ANDREWS RD
100000339	6085	2	67.459365			
100000339	6085	3	66.330286			
100000339	6085	4	65.55141			
100000339	6085	5	62.85536			
100000339	6085	6	63.638297			
100000339	6085	7	58.96115			
100000339	6085	8	81.009964			
100000339	6085	9	67.783144			
100000339	6085	10	60.617687			
100000339	6086	1	40.89417	ST ANDREWS RD	E	BROAD RIVER RD & ST ANDREWS RD
100000339	6086	2	38.138442			
100000339	6086	3	39.373197			
100000339	6086	4	45.400486			
100000339	6086	5	42.747379			
100000339	6086	6	39.250738			
100000339	6086	7	41.002892			
100000339	6086	8	50.36493			
100000339	6086	9	40.63368			
100000339	6086	10	40.490363			
100000343	6059	1	0.003841	BROAD RIVER RD	NW	NUNAMAKER DR & BROAD RIVER RD
100000343	6059	2	0.024234			
100000343	6059	3	0.007909			
100000343	6059	4	0.006558			
100000343	6059	5	0.009386			
100000343	6059	6	0.043826			
100000343	6059	7	0.002023			
100000343	6059	8	0.003632			
100000343	6059	9	0.006664			
100000343	6059	10	0.003667			
100000343	6063	1		NUNAMAKER DR	SW	NUNAMAKER DR & BROAD RIVER RD
100000343	6063	2				
100000343	6063	3				
100000343	6063	4				
100000343	6063	5				
100000343	6063	6				
100000343	6063	7				
100000343	6063	8				
100000343	6063	9				
100000343	6063	10				
100000343	6065	1	0.000531	BROAD RIVER RD	SE	NUNAMAKER DR & BROAD RIVER RD
100000343	6065	2	0.000228			
100000343	6065	3	0.001246			
100000343	6065	4	0.00082			
100000343	6065	5	0.00215			
100000343	6065	6	0.001662			
100000343	6065	7	0.005507			
100000343	6065	8	0.000593			
100000343	6065	9	0.000757			
100000343	6065	10	0.0006			
100000344	6065	1	5.604636	BROAD RIVER RD	NW	YOUNG DR
100000344	6065	2	6.089298			
100000344	6065	3	6.269995			
100000344	6065	4	5.640466			
100000344	6065	5	6.53349			
100000344	6065	6	5.391911			
100000344	6065	7	3.950953			
100000344	6065	8	6.393609			
100000344	6065	9	6.339985			
100000344	6065	10	6.836225			
100000344	6066	1	176.283082	BROAD RIVER RD	SE	YOUNG DR
100000344	6066	2	146.266224			
100000344	6066	3	134.360555			
100000344	6066	4	131.971582			
100000344	6066	5	158.080233			
100000344	6066	6	142.373712			
100000344	6066	7	153.438356			
100000344	6066	8	170.801528			
100000344	6066	9	142.197971			
100000344	6066	10	125.670808			
100000344	6067	1	104.042802	YOUNG DR	SW	YOUNG DR
100000344	6067	2	89.056686			
100000344	6067	3	88.849445			
100000344	6067	4	95.611346			
100000344	6067	5	100.339016			
100000344	6067	6	123.566042			
100000344	6067	7	74.649408			
100000344	6067	8	86.178127			
100000344	6067	9	116.008972			
100000344	6067	10	100.417209			
100000344	6068	1	39.752975	SEMINOLE RD	NE	YOUNG DR
100000344	6068	2	45.304791			
100000344	6068	3	36.590271			
100000344	6068	4	37.969822			
100000344	6068	5	39.314229			
100000344	6068	6	46.313878			
100000344	6068	7	38.300862			
100000344	6068	8	32.608798			
100000344	6068	9	52.926405			
100000344	6068	10	41.491224			
100000348	5116	1	6.499839	ST ANDREWS RD	NW	ST ANDREWS RD & JAMIL RD
100000348	5116	2	5.373201			
100000348	5116	3	6.619888			
100000348	5116	4	5.378619			
100000348	5116	5	4.818547			
100000348	5116	6	6.802032			
100000348	5116	7	5.81797			
100000348	5116	8	6.63756			
100000348	5116	9	6.289986			
100000348	5116	10	7.547032			
100000348	6114	1	12.057224	ST ANDREWS RD	E	ST ANDREWS RD & JAMIL RD
100000348	6114	2	13.449396			
100000348	6114	3	18.60294			

Node	Superlink	Run	Average Control Delay	Approach Street Name	Direction	Intersection
100000348	6114	4	15.984075			
100000348	6114	5	14.468137			
100000348	6114	6	15.685044			
100000348	6114	7	13.474232			
100000348	6114	8	20.023792			
100000348	6114	9	14.56689			
100000348	6114	10	16.889316			
100000348	6119	1	63.747053	JAMIL RD	S	ST ANDREWS RD & JAMIL RD
100000348	6119	2	64.552808			
100000348	6119	3	64.687392			
100000348	6119	4	58.835064			
100000348	6119	5	62.07424			
100000348	6119	6	63.155209			
100000348	6119	7	63.772829			
100000348	6119	8	66.00347			
100000348	6119	9	64.845495			
100000348	6119	10	62.484622			
100000349	6066	1	7.863746	BROAD RIVER RD	NW	ST ANDREWS PKY & BROAD RIVER RD
100000349	6066	2	6.533216			
100000349	6066	3	4.887974			
100000349	6066	4	6.150758			
100000349	6066	5	3.918546			
100000349	6066	6	3.15574			
100000349	6066	7	4.519063			
100000349	6066	8	4.981937			
100000349	6066	9	5.695658			
100000349	6066	10	6.671206			
100000349	6078	1	61.181371	ST ANDREWS PKY	SW	ST ANDREWS PKY & BROAD RIVER RD
100000349	6078	2	56.737507			
100000349	6078	3	72.57615			
100000349	6078	4	55.357217			
100000349	6078	5	68.518			
100000349	6078	6	61.632119			
100000349	6078	7	55.953626			
100000349	6078	8	53.982351			
100000349	6078	9	66.78794			
100000349	6078	10	67.485335			
100000349	6079	1		BROAD RIVER RD	NE	ST ANDREWS PKY & BROAD RIVER RD
100000349	6079	2				
100000349	6079	3				
100000349	6079	4				
100000349	6079	5				
100000349	6079	6				
100000349	6079	7				
100000349	6079	8				
100000349	6079	9				
100000349	6079	10				
100000349	6083	1	44.446817	BROAD RIVER RD	SE	ST ANDREWS PKY & BROAD RIVER RD
100000349	6083	2	30.905835			
100000349	6083	3	26.48022			
100000349	6083	4	33.992562			
100000349	6083	5	35.587505			
100000349	6083	6	27.363046			
100000349	6083	7	39.716641			
100000349	6083	8	38.103051			
100000349	6083	9	31.67772			
100000349	6083	10	22.324901			
100000353	5104	1	37.081867	PINEY GROVE RD	W	BOWER PKY
100000353	5104	2	33.130157			
100000353	5104	3	36.686648			
100000353	5104	4	35.457569			
100000353	5104	5	37.332617			
100000353	5104	6	39.891229			
100000353	5104	7	39.110977			
100000353	5104	8	44.241777			
100000353	5104	9	33.156947			
100000353	5104	10	41.718879			
100000353	6125	1	26.778192	BOWER PKY	SE	BOWER PKY
100000353	6125	2	28.471923			
100000353	6125	3	27.578936			
100000353	6125	4	28.190305			
100000353	6125	5	24.9229			
100000353	6125	6	23.524792			
100000353	6125	7	27.560011			
100000353	6125	8	26.211418			
100000353	6125	9	30.231527			
100000353	6125	10	24.630899			
100000353	6126	1	27.794981	PINEY GROVE RD	E	BOWER PKY
100000353	6126	2	30.145151			
100000353	6126	3	29.290524			
100000353	6126	4	28.666369			
100000353	6126	5	29.978414			
100000353	6126	6	30.531182			
100000353	6126	7	28.59605			
100000353	6126	8	35.264121			
100000353	6126	9	29.928979			
100000353	6126	10	29.614519			
100000353	6127	1	46.977805	JAMIL RD	NW	BOWER PKY
100000353	6127	2	39.880934			
100000353	6127	3	54.291429			
100000353	6127	4	46.019327			
100000353	6127	5	37.916873			
100000353	6127	6	44.302045			
100000353	6127	7	47.663654			
100000353	6127	8	41.604828			
100000353	6127	9	49.64835			
100000353	6127	10	44.114857			
100000354	6095	1	20.160265	ST ANDREWS RD	SW	ST ANDREWS RD
100000354	6095	2	19.125756			
100000354	6095	3	21.536892			
100000354	6095	4	20.129124			
100000354	6095	5	17.453347			
100000354	6095	6	21.249941			
100000354	6095	7	22.109711			
100000354	6095	8	19.37877			
100000354	6095	9	19.95582			
100000354	6095	10	17.344737			
100000354	6096	1	9.628363	ST ANDREWS RD	NE	ST ANDREWS RD
100000354	6096	2	9.943313			
100000354	6096	3	9.957412			

Node	Superlink	Run	Average Control Delay	Approach Street Name	Direction	Intersection
100000354	6096	4	10.148636			
100000354	6096	5	8.547601			
100000354	6096	6	9.76843			
100000354	6096	7	10.671051			
100000354	6096	8	11.152422			
100000354	6096	9	9.931106			
100000354	6096	10	9.800803			
100000354	6098	1	446.149902	CHARTWELL RD	NW	ST ANDREWS RD
100000354	6098	2	151.082928			
100000354	6098	3	373.692426			
100000354	6098	4	182.622394			
100000354	6098	5	393.821805			
100000354	6098	6	470.963436			
100000354	6098	7	431.834654			
100000354	6098	8	207.119147			
100000354	6098	9	255.490665			
100000354	6098	10	380.293205			
100000354	6099	1	99.301065	KAY ST	SE	ST ANDREWS RD
100000354	6099	2	101.087596			
100000354	6099	3	98.912191			
100000354	6099	4	111.046751			
100000354	6099	5	133.519482			
100000354	6099	6	116.161019			
100000354	6099	7	142.23259			
100000354	6099	8	113.64087			
100000354	6099	9	34.965841			
100000354	6099	10	111.730047			
100000356	6086	1	0.122295	ST ANDREWS RD	SW	LAWRENCE ST & ST ANDREWS RD
100000356	6086	2	0.190337			
100000356	6086	3	0.214458			
100000356	6086	4	0.228719			
100000356	6086	5	0.182275			
100000356	6086	6	0.207794			
100000356	6086	7	0.292101			
100000356	6086	8	0.261375			
100000356	6086	9	0.23288			
100000356	6086	10	0.207729			
100000356	6092	1	9.281758	LAWRENCE ST	SE	LAWRENCE ST & ST ANDREWS RD
100000356	6092	2	11.577576			
100000356	6092	3	9.07763			
100000356	6092	4	9.687633			
100000356	6092	5	10.261667			
100000356	6092	6	10.009346			
100000356	6092	7	10.15661			
100000356	6092	8	9.683914			
100000356	6092	9	11.107098			
100000356	6092	10	12.243766			
100000356	6094	1	0.687613	ST ANDREWS RD	NE	LAWRENCE ST & ST ANDREWS RD
100000356	6094	2	1.107561			
100000356	6094	3	0.6247			
100000356	6094	4	0.768381			
100000356	6094	5	0.744918			
100000356	6094	6	0.898911			
100000356	6094	7	0.780574			
100000356	6094	8	0.649371			
100000356	6094	9	0.671486			
100000356	6094	10	0.672141			
100000357	6119	1	1.405896	JAMIL RD	NW	JAMIL RD & PAISLEY LN
100000357	6119	2	1.579174			
100000357	6119	3	1.189315			
100000357	6119	4	1.146384			
100000357	6119	5	1.270879			
100000357	6119	6	1.369892			
100000357	6119	7	1.072938			
100000357	6119	8	1.162218			
100000357	6119	9	1.074963			
100000357	6119	10	0.993046			
100000357	6120	1	16.376938	PAISLEY LN	NE	JAMIL RD & PAISLEY LN
100000357	6120	2	15.273912			
100000357	6120	3	19.745046			
100000357	6120	4	15.475946			
100000357	6120	5	14.581999			
100000357	6120	6	33.603775			
100000357	6120	7	13.395479			
100000357	6120	8	18.249427			
100000357	6120	9	13.87716			
100000357	6120	10	17.540776			
100000357	6121	1	0.866727	JAMIL RD	SE	JAMIL RD & PAISLEY LN
100000357	6121	2	1.521024			
100000357	6121	3	1.210135			
100000357	6121	4	0.781077			
100000357	6121	5	1.027384			
100000357	6121	6	1.31466			
100000357	6121	7	1.317134			
100000357	6121	8	1.295765			
100000357	6121	9	1.63047			
100000357	6121	10	1.224246			
100000358	5117	1	12.116998	ST ANDREWS RD	NE	ST ANDREWS RD
100000358	5117	2	10.696276			
100000358	5117	3	11.34008			
100000358	5117	4	12.078988			
100000358	5117	5	10.653773			
100000358	5117	6	11.054829			
100000358	5117	7	11.905162			
100000358	5117	8	11.384569			
100000358	5117	9	11.122235			
100000358	5117	10	10.583442			
100000358	6100	1	16.27008	ST ANDREWS RD	SW	ST ANDREWS RD
100000358	6100	2	12.699603			
100000358	6100	3	15.41618			
100000358	6100	4	14.480133			
100000358	6100	5	15.44686			
100000358	6100	6	15.235309			
100000358	6100	7	15.180611			
100000358	6100	8	14.657479			
100000358	6100	9	15.072206			
100000358	6100	10	14.609164			
100000358	6101	1	28.112356	BURNING TREE RD	NW	ST ANDREWS RD
100000358	6101	2	35.586237			
100000358	6101	3	29.921597			

Node	Superlink	Run	Average Control Delay	Approach Street Name	Direction	Intersection
100000358	6101	4	28.119263			
100000358	6101	5	27.852836			
100000358	6101	6	27.672029			
100000358	6101	7	30.670414			
100000358	6101	8	30.644799			
100000358	6101	9	29.419183			
100000358	6101	10	32.587061			
100000358	6102	1	25.429546	FERNANDINA RD	SE	ST ANDREWS RD
100000358	6102	2	23.347732			
100000358	6102	3	22.589889			
100000358	6102	4	23.754029			
100000358	6102	5	20.943416			
100000358	6102	6	23.186259			
100000358	6102	7	28.165105			
100000358	6102	8	23.47421			
100000358	6102	9	22.556941			
100000358	6102	10	20.853145			
100000360	3294	1	17.697855	EXIT 106 WB OFF RAMP	NE	EXIT 106 WB OFF RAMP & BURNING TREE RD
100000360	3294	2	12.955081			
100000360	3294	3	13.565864			
100000360	3294	4	15.167303			
100000360	3294	5	11.780458			
100000360	3294	6	16.106854			
100000360	3294	7	14.336159			
100000360	3294	8	14.691232			
100000360	3294	9	13.568716			
100000360	3294	10	11.616605			
100000360	6101	1	0.051478	BURNING TREE RD	S	EXIT 106 WB OFF RAMP & BURNING TREE RD
100000360	6101	2	0.051412			
100000360	6101	3	0.052991			
100000360	6101	4	0.046522			
100000360	6101	5	0.132167			
100000360	6101	6	0.119281			
100000360	6101	7	0.043305			
100000360	6101	8	0.042286			
100000360	6101	9	0.090994			
100000360	6101	10	0.041182			
100000360	6105	1	0.017065	BURNING TREE RD	N	EXIT 106 WB OFF RAMP & BURNING TREE RD
100000360	6105	2	0.018863			
100000360	6105	3	0.025872			
100000360	6105	4	0.029587			
100000360	6105	5	0.030223			
100000360	6105	6	0.022744			
100000360	6105	7	0.030213			
100000360	6105	8	0.022035			
100000360	6105	9	0.022254			
100000360	6105	10	0.011008			
100000362	6134	1	12.640813	JAMIL RD	NW	HARBISON BLVD & JAMIL RD
100000362	6134	2	11.812937			
100000362	6134	3	8.44918			
100000362	6134	4	10.913548			
100000362	6134	5	13.704737			
100000362	6134	6	12.223742			
100000362	6134	7	10.93803			
100000362	6134	8	10.853024			
100000362	6134	9	12.098148			
100000362	6134	10	12.578707			
100000362	6137	1	1.591768	HARBISON BLVD	NE	HARBISON BLVD & JAMIL RD
100000362	6137	2	1.156001			
100000362	6137	3	1.09929			
100000362	6137	4	1.261751			
100000362	6137	5	1.270117			
100000362	6137	6	1.657408			
100000362	6137	7	1.419843			
100000362	6137	8	1.291695			
100000362	6137	9	0.935184			
100000362	6137	10	1.562158			
100000362	6473	1	0.047941	HARBISON BLVD	SW	HARBISON BLVD & JAMIL RD
100000362	6473	2	0.001391			
100000362	6473	3	0.001539			
100000362	6473	4	0.00369			
100000362	6473	5	0.003098			
100000362	6473	6	0.001593			
100000362	6473	7	0.002276			
100000362	6473	8	0.002194			
100000362	6473	9	0.001686			
100000362	6473	10	0.002516			
100000363	6125	1	0.479689	BOWER PKY	NW	BOWER PKY & JAMIL RD
100000363	6125	2	0.2924			
100000363	6125	3	0.235777			
100000363	6125	4	0.309554			
100000363	6125	5	0.361695			
100000363	6125	6	0.353258			
100000363	6125	7	0.357973			
100000363	6125	8	0.416831			
100000363	6125	9	0.264866			
100000363	6125	10	0.301636			
100000363	6134	1	12.790736	JAMIL RD	SW	BOWER PKY & JAMIL RD
100000363	6134	2	11.982745			
100000363	6134	3	10.95332			
100000363	6134	4	10.813412			
100000363	6134	5	10.678778			
100000363	6134	6	10.528995			
100000363	6134	7	10.198734			
100000363	6134	8	10.672031			
100000363	6134	9	11.124958			
100000363	6134	10	11.268498			
100000363	6160	1	0.523848	BOWER PKY	SE	BOWER PKY & JAMIL RD
100000363	6160	2	0.516742			
100000363	6160	3	0.534125			
100000363	6160	4	0.429221			
100000363	6160	5	0.467048			
100000363	6160	6	0.39856			
100000363	6160	7	0.348185			
100000363	6160	8	0.666693			
100000363	6160	9	0.484718			
100000363	6160	10	0.654421			
100000364	6145	1	3.561282	HARBISON BLVD	SW	HARBISON BLVD & COLUMBIANA DR
100000364	6145	2	2.88618			
100000364	6145	3	2.493524			

Node	Superlink	Run	Average Control Delay	Approach Street Name	Direction	Intersection
100000364	6145	4	2.371105			
100000364	6145	5	2.143394			
100000364	6145	6	2.775035			
100000364	6145	7	2.974472			
100000364	6145	8	3.223593			
100000364	6145	9	2.854742			
100000364	6145	10	2.88489			
100000364	6176	1	3.825322	HARBISON BLVD	NE	HARBISON BLVD & COLUMBIANA DR
100000364	6176	2	3.718805			
100000364	6176	3	3.575589			
100000364	6176	4	3.711763			
100000364	6176	5	4.140016			
100000364	6176	6	3.825251			
100000364	6176	7	3.528126			
100000364	6176	8	4.040667			
100000364	6176	9	3.38598			
100000364	6176	10	2.952163			
100000364	6177	1		COLUMBIANA DR	NW	HARBISON BLVD & COLUMBIANA DR
100000364	6177	2				
100000364	6177	3				
100000364	6177	4				
100000364	6177	5				
100000364	6177	6				
100000364	6177	7				
100000364	6177	8				
100000364	6177	9				
100000364	6177	10				
100000364	6196	1	48.161995	COLUMBIANA DR	SE	HARBISON BLVD & COLUMBIANA DR
100000364	6196	2	43.492655			
100000364	6196	3	42.21227			
100000364	6196	4	43.982942			
100000364	6196	5	44.444806			
100000364	6196	6	46.889875			
100000364	6196	7	46.604336			
100000364	6196	8	45.577043			
100000364	6196	9	44.470947			
100000364	6196	10	48.006894			
100000365	6137	1	7.670167	HARBISON BLVD	SW	COLUMBIANA CIR
100000365	6137	2	6.153712			
100000365	6137	3	8.222521			
100000365	6137	4	7.377472			
100000365	6137	5	8.809091			
100000365	6137	6	7.422993			
100000365	6137	7	8.210174			
100000365	6137	8	7.299796			
100000365	6137	9	9.386402			
100000365	6137	10	7.258114			
100000365	6140	1	16.570366	COLUMBIANA CIR	SE	COLUMBIANA CIR
100000365	6140	2	20.015646			
100000365	6140	3	19.907477			
100000365	6140	4	17.430055			
100000365	6140	5	18.008147			
100000365	6140	6	18.404027			
100000365	6140	7	18.399439			
100000365	6140	8	20.584349			
100000365	6140	9	15.319134			
100000365	6140	10	17.193719			
100000365	6145	1	12.345435	HARBISON BLVD	NE	COLUMBIANA CIR
100000365	6145	2	11.974414			
100000365	6145	3	12.734261			
100000365	6145	4	11.634825			
100000365	6145	5	11.803359			
100000365	6145	6	12.792466			
100000365	6145	7	12.530433			
100000365	6145	8	12.066689			
100000365	6145	9	11.192289			
100000365	6145	10	10.871846			
100000365	6151	1	28.108205	PARK TERRACE DR	NW	COLUMBIANA CIR
100000365	6151	2	30.60701			
100000365	6151	3	31.64295			
100000365	6151	4	33.735913			
100000365	6151	5	31.055823			
100000365	6151	6	26.932215			
100000365	6151	7	33.066758			
100000365	6151	8	26.705167			
100000365	6151	9	29.688146			
100000365	6151	10	33.066678			
100000374	6151	1	35.464648	PARK TERRACE DR	S	BOWER PKY
100000374	6151	2	37.235533			
100000374	6151	3	33.679867			
100000374	6151	4	38.176205			
100000374	6151	5	33.405367			
100000374	6151	6	41.896223			
100000374	6151	7	33.756731			
100000374	6151	8	36.226479			
100000374	6151	9	35.385998			
100000374	6151	10	37.007977			
100000374	6160	1	7.529844	BOWER PKY	W	BOWER PKY
100000374	6160	2	8.040373			
100000374	6160	3	7.609519			
100000374	6160	4	7.056383			
100000374	6160	5	8.25172			
100000374	6160	6	8.472988			
100000374	6160	7	7.954821			
100000374	6160	8	9.572246			
100000374	6160	9	9.09511			
100000374	6160	10	8.768834			
100000374	6161	1	4.243927		N	BOWER PKY
100000374	6161	2	4.153871			
100000374	6161	3	3.739287			
100000374	6161	4	4.751614			
100000374	6161	5	4.430348			
100000374	6161	6	4.326764			
100000374	6161	7	4.24812			
100000374	6161	8	4.595052			
100000374	6161	9	3.731224			
100000374	6161	10	3.976505			
100000374	6162	1		BOWER PKY	E	BOWER PKY
100000374	6162	2				
100000374	6162	3				

Node	Superlink	Run	Average Control Delay	Approach Street Name	Direction	Intersection
100000374	6162	4				
100000374	6162	5				
100000374	6162	6				
100000374	6162	7				
100000374	6162	8				
100000374	6162	9				
100000374	6162	10				
100000375	6196	1	3.865219	COLUMBIANA DR	NW	COLUMBIANA DR
100000375	6196	2	1.726568			
100000375	6196	3	2.850172			
100000375	6196	4	2.680514			
100000375	6196	5	4.182298			
100000375	6196	6	1.850997			
100000375	6196	7	3.103039			
100000375	6196	8	2.663729			
100000375	6196	9	3.267801			
100000375	6196	10	1.309753			
100000375	6204	1	3.331743	COLUMBIANA DR	SE	COLUMBIANA DR
100000375	6204	2	2.801			
100000375	6204	3	2.278629			
100000375	6204	4	2.53726			
100000375	6204	5	2.518004			
100000375	6204	6	2.653799			
100000375	6204	7	2.912583			
100000375	6204	8	2.313584			
100000375	6204	9	3.080628			
100000375	6204	10	2.685711			
100000375	6550	1	14.230621	CROSSBOW DR	NE	COLUMBIANA DR
100000375	6550	2	10.729398			
100000375	6550	3	9.479531			
100000375	6550	4	12.931903			
100000375	6550	5	11.602829			
100000375	6550	6	12.706341			
100000375	6550	7	11.600397			
100000375	6550	8	13.415859			
100000375	6550	9	12.672749			
100000375	6550	10	8.631629			
100000375	6551	1	15.324042	DRIVEWAY	SW	COLUMBIANA DR
100000375	6551	2	13.287367			
100000375	6551	3	13.588741			
100000375	6551	4	11.718079			
100000375	6551	5	10.019019			
100000375	6551	6	8.076237			
100000375	6551	7	13.460759			
100000375	6551	8	9.724309			
100000375	6551	9	12.416984			
100000375	6551	10	13.29792			
100000391	5071	1	5.263048	BROAD RIVER RD	NW	BROAD RIVER RD & COLUMBIANA DR
100000391	5071	2	5.576676			
100000391	5071	3	4.662073			
100000391	5071	4	4.616058			
100000391	5071	5	4.921804			
100000391	5071	6	4.362167			
100000391	5071	7	4.787345			
100000391	5071	8	3.682559			
100000391	5071	9	4.998469			
100000391	5071	10	4.409894			
100000391	6214	1	48.359536	COLUMBIANA DR	NE	BROAD RIVER RD & COLUMBIANA DR
100000391	6214	2	54.256119			
100000391	6214	3	43.274842			
100000391	6214	4	50.65955			
100000391	6214	5	53.672948			
100000391	6214	6	45.348288			
100000391	6214	7	62.056889			
100000391	6214	8	65.045037			
100000391	6214	9	48.300524			
100000391	6214	10	43.635372			
100000391	6224	1	31.010931	BROAD RIVER RD	SE	BROAD RIVER RD & COLUMBIANA DR
100000391	6224	2	30.151133			
100000391	6224	3	31.042308			
100000391	6224	4	34.080335			
100000391	6224	5	30.014312			
100000391	6224	6	32.076255			
100000391	6224	7	31.674842			
100000391	6224	8	32.822328			
100000391	6224	9	33.907503			
100000391	6224	10	33.476619			
100000392	6121	1	0.754508	JAMIL RD	NW	TRAM RD & JAMIL RD
100000392	6121	2	0.556982			
100000392	6121	3	0.70267			
100000392	6121	4	0.542946			
100000392	6121	5	0.860788			
100000392	6121	6	1.286085			
100000392	6121	7	0.74259			
100000392	6121	8	0.564517			
100000392	6121	9	0.484361			
100000392	6121	10	0.823195			
100000392	6127	1	0.634361	JAMIL RD	SE	TRAM RD & JAMIL RD
100000392	6127	2	0.076578			
100000392	6127	3	0.058291			
100000392	6127	4	0.029386			
100000392	6127	5	0.149408			
100000392	6127	6	0.341592			
100000392	6127	7	0.047255			
100000392	6127	8	0.352071			
100000392	6127	9	0.032318			
100000392	6127	10	0.404711			
100000392	6261	1	7.707756	TRAM RD	NE	TRAM RD & JAMIL RD
100000392	6261	2	7.758841			
100000392	6261	3	7.470479			
100000392	6261	4	7.510844			
100000392	6261	5	7.985481			
100000392	6261	6	8.158479			
100000392	6261	7	7.80556			
100000392	6261	8	8.061919			
100000392	6261	9	7.663667			
100000392	6261	10	7.541046			
100000394	6204	1	0	COLUMBIANA DR	NW	COLUMBIANA DR
100000394	6204	2	0			
100000394	6204	3	0			

Node	Superlink	Run	Average Control Delay	Approach Street Name	Direction	Intersection
100000394	6204	4	0			
100000394	6204	5	0			
100000394	6204	6	0			
100000394	6204	7	0			
100000394	6204	8	0			
100000394	6204	9	0			
100000394	6204	10	0			
100000394	6208	1	0	COLUMBIANA DR	SE	COLUMBIANA DR
100000394	6208	2	0			
100000394	6208	3	0			
100000394	6208	4	0			
100000394	6208	5	0			
100000394	6208	6	0			
100000394	6208	7	0			
100000394	6208	8	0			
100000394	6208	9	0			
100000394	6208	10	0			
100000394	6210	1		COLUMBIA AVE	NE	COLUMBIANA DR
100000394	6210	2				
100000394	6210	3				
100000394	6210	4				
100000394	6210	5				
100000394	6210	6				
100000394	6210	7				
100000394	6210	8				
100000394	6210	9				
100000394	6210	10				
100000394	6549	1		DRIVEWAY	SW	COLUMBIANA DR
100000394	6549	2				
100000394	6549	3				
100000394	6549	4				
100000394	6549	5				
100000394	6549	6				
100000394	6549	7				
100000394	6549	8				
100000394	6549	9				
100000394	6549	10				
100000395	5084	1	70.800254	LAKE MURRAY BLVD	W	LAKE MURRAY BLVD & COLUMBIANA DR
100000395	5084	2	82.977731			
100000395	5084	3	100.561342			
100000395	5084	4	80.818891			
100000395	5084	5	70.901034			
100000395	5084	6	62.619462			
100000395	5084	7	75.287621			
100000395	5084	8	66.679415			
100000395	5084	9	50.371368			
100000395	5084	10	74.188258			
100000395	6208	1	36.632015	COLUMBIANA DR	NW	LAKE MURRAY BLVD & COLUMBIANA DR
100000395	6208	2	35.969438			
100000395	6208	3	37.279542			
100000395	6208	4	36.008004			
100000395	6208	5	38.341222			
100000395	6208	6	38.90493			
100000395	6208	7	40.349519			
100000395	6208	8	38.003975			
100000395	6208	9	34.886178			
100000395	6208	10	39.945714			
100000395	6214	1	50.032829	COLUMBIANA DR	S	LAKE MURRAY BLVD & COLUMBIANA DR
100000395	6214	2	47.007632			
100000395	6214	3	86.973287			
100000395	6214	4	104.891391			
100000395	6214	5	35.161908			
100000395	6214	6	40.79851			
100000395	6214	7	85.19383			
100000395	6214	8	40.829942			
100000395	6214	9	58.895213			
100000395	6214	10	66.193925			
100000395	6215	1	77.598379	LAKE MURRAY BLVD	E	LAKE MURRAY BLVD & COLUMBIANA DR
100000395	6215	2	57.930174			
100000395	6215	3	68.149686			
100000395	6215	4	40.344287			
100000395	6215	5	49.702728			
100000395	6215	6	54.761192			
100000395	6215	7	65.588079			
100000395	6215	8	73.099127			
100000395	6215	9	67.039195			
100000395	6215	10	76.095809			
100000398	5101	1	0	HARBISON BLVD	W	HARBISON BLVD & PARKRIDGE DR
100000398	5101	2	0.005537			
100000398	5101	3	0.000821			
100000398	5101	4	0			
100000398	5101	5	0.001165			
100000398	5101	6	0.259312			
100000398	5101	7	0			
100000398	5101	8	0.001669			
100000398	5101	9	0.026005			
100000398	5101	10	0.123858			
100000398	6267	1	9.46372	PARKRIDGE DR	SE	HARBISON BLVD & PARKRIDGE DR
100000398	6267	2	9.024678			
100000398	6267	3	8.610144			
100000398	6267	4	8.550854			
100000398	6267	5	8.304559			
100000398	6267	6	9.018782			
100000398	6267	7	8.626638			
100000398	6267	8	9.040517			
100000398	6267	9	8.925801			
100000398	6267	10	9.356195			
100000398	6268	1	0.2957	HARBISON BLVD	NE	HARBISON BLVD & PARKRIDGE DR
100000398	6268	2	0.191889			
100000398	6268	3	0			
100000398	6268	4	0.293083			
100000398	6268	5	1.149574			
100000398	6268	6	0			
100000398	6268	7	0			
100000398	6268	8	0			
100000398	6268	9	0.065643			
100000398	6268	10	0.294076			
100000399	5113	1	44.19011	PINEY GROVE RD	E	PINEY GROVE RD & FERNANDINA RD
100000399	5113	2	42.296123			
100000399	5113	3	45.811948			

Node	Superlink	Run	Average Control Delay	Approach Street Name	Direction	Intersection
100000399	5113	4	48.001196			
100000399	5113	5	35.796582			
100000399	5113	6	36.190922			
100000399	5113	7	47.076655			
100000399	5113	8	39.321223			
100000399	5113	9	44.854094			
100000399	5113	10	49.360402			
100000399	6263	1	22.153959	PINEY GROVE RD	W	PINEY GROVE RD & FERNANDINA RD
100000399	6263	2	24.998282			
100000399	6263	3	29.857749			
100000399	6263	4	23.198528			
100000399	6263	5	22.658865			
100000399	6263	6	20.392787			
100000399	6263	7	25.908549			
100000399	6263	8	42.788505			
100000399	6263	9	26.459901			
100000399	6263	10	30.634276			
100000399	6265	1	10.462585	FERNANDINA RD	SE	PINEY GROVE RD & FERNANDINA RD
100000399	6265	2	9.488691			
100000399	6265	3	10.556856			
100000399	6265	4	7.838242			
100000399	6265	5	10.531379			
100000399	6265	6	10.794552			
100000399	6265	7	9.652012			
100000399	6265	8	9.408769			
100000399	6265	9	9.584114			
100000399	6265	10	9.974134			
100000399	6266	1	20.280553	FERNANDINA RD	N	PINEY GROVE RD & FERNANDINA RD
100000399	6266	2	27.839662			
100000399	6266	3	32.013047			
100000399	6266	4	20.974788			
100000399	6266	5	38.244542			
100000399	6266	6	17.591988			
100000399	6266	7	58.504382			
100000399	6266	8	43.801504			
100000399	6266	9	41.165014			
100000399	6266	10	29.676039			
100000401	5093	1	11.417695	LAKE MURRAY BLVD	E	KINLEY RD
100000401	5093	2	9.934692			
100000401	5093	3	10.859877			
100000401	5093	4	9.696791			
100000401	5093	5	9.188301			
100000401	5093	6	10.823358			
100000401	5093	7	9.771419			
100000401	5093	8	11.101126			
100000401	5093	9	11.234935			
100000401	5093	10	11.659137			
100000401	6276	1	30.20223	KINLEY RD	S	KINLEY RD
100000401	6276	2	26.472191			
100000401	6276	3	22.064378			
100000401	6276	4	21.620549			
100000401	6276	5	27.54567			
100000401	6276	6	23.704091			
100000401	6276	7	21.149696			
100000401	6276	8	24.171307			
100000401	6276	9	25.410169			
100000401	6276	10	25.540362			
100000401	6313	1	17.228222	LAKE MURRAY BLVD	W	KINLEY RD
100000401	6313	2	21.259673			
100000401	6313	3	17.981804			
100000401	6313	4	18.659078			
100000401	6313	5	17.42123			
100000401	6313	6	17.106015			
100000401	6313	7	16.146624			
100000401	6313	8	15.00132			
100000401	6313	9	16.295047			
100000401	6313	10	18.089474			
100000401	6556	1	42.290902	PARKRIDGE DR	N	KINLEY RD
100000401	6556	2	31.291264			
100000401	6556	3	33.430817			
100000401	6556	4	46.238082			
100000401	6556	5	39.07018			
100000401	6556	6	41.628786			
100000401	6556	7	37.353853			
100000401	6556	8	40.453281			
100000401	6556	9	42.49144			
100000401	6556	10	34.68653			
100000438	2044	1	0	RAMP	SE	RAMP
100000438	2044	2	0			
100000438	2044	3	0			
100000438	2044	4	0			
100000438	2044	5	0			
100000438	2044	6	0			
100000438	2044	7	0			
100000438	2044	8	0			
100000438	2044	9	0			
100000438	2044	10	0			
100000438	5021	1	3.94753	SUNSET BLVD	NW	RAMP
100000438	5021	2	4.782709			
100000438	5021	3	4.378834			
100000438	5021	4	4.368887			
100000438	5021	5	4.463146			
100000438	5021	6	4.937494			
100000438	5021	7	4.911321			
100000438	5021	8	3.835412			
100000438	5021	9	4.427274			
100000438	5021	10	5.195776			
100000438	5023	1	0.239754	SUNSET BLVD	SE	RAMP
100000438	5023	2	0.027659			
100000438	5023	3	0.062864			
100000438	5023	4	0.058198			
100000438	5023	5	0.060169			
100000438	5023	6	0.054754			
100000438	5023	7	0.226427			
100000438	5023	8	0.13136			
100000438	5023	9	0.042692			
100000438	5023	10	0.070648			
100000446	2047	1	0	RAMP	S	RAMP & I-20 EXIT 63 WB ON RAMP
100000446	2047	2	0			
100000446	2047	3	0			

Node	Superlink	Run	Average Control Delay	Approach Street Name	Direction	Intersection
100000446	2047	4	0			
100000446	2047	5	0			
100000446	2047	6	0			
100000446	2047	7	0			
100000446	2047	8	0			
100000446	2047	9	0			
100000446	2047	10	0			
100000446	2059	1	0	RAMP	SW	RAMP & I-20 EXIT 63 WB ON RAMP
100000446	2059	2	0			
100000446	2059	3	0			
100000446	2059	4	0			
100000446	2059	5	0			
100000446	2059	6	0			
100000446	2059	7	0			
100000446	2059	8	0			
100000446	2059	9	0			
100000446	2059	10	0			
100000450	2060	1	0	RAMP	E	BUSH RIVER RD
100000450	2060	2	0			
100000450	2060	3	0			
100000450	2060	4	0			
100000450	2060	5	0			
100000450	2060	6	0			
100000450	2060	7	0			
100000450	2060	8	0			
100000450	2060	9	0			
100000450	2060	10	0			
100000450	5037	1	0	BUSH RIVER RD	E	BUSH RIVER RD
100000450	5037	2	0			
100000450	5037	3	0			
100000450	5037	4	0			
100000450	5037	5	0			
100000450	5037	6	0			
100000450	5037	7	0			
100000450	5037	8	0			
100000450	5037	9	0			
100000450	5037	10	0			
100000450	5038	1	1.131718	BUSH RIVER RD	NW	BUSH RIVER RD
100000450	5038	2	1.536568			
100000450	5038	3	1.691			
100000450	5038	4	1.877317			
100000450	5038	5	1.832426			
100000450	5038	6	1.960367			
100000450	5038	7	1.773519			
100000450	5038	8	1.990214			
100000450	5038	9	1.691596			
100000450	5038	10	1.847246			
100000452	2071	1	20.853941	RAMP	W	RAMP & BUSH RIVER RD
100000452	2071	2	26.060937			
100000452	2071	3	27.870371			
100000452	2071	4	20.790697			
100000452	2071	5	22.230833			
100000452	2071	6	18.474444			
100000452	2071	7	23.971202			
100000452	2071	8	19.864894			
100000452	2071	9	18.369254			
100000452	2071	10	20.999162			
100000452	5034	1	0.335855	BUSH RIVER RD	NW	RAMP & BUSH RIVER RD
100000452	5034	2	0.843978			
100000452	5034	3	0.70048			
100000452	5034	4	0.134015			
100000452	5034	5	0.157496			
100000452	5034	6	0.289044			
100000452	5034	7	0.355432			
100000452	5034	8	0.349983			
100000452	5034	9	0.176145			
100000452	5034	10	0.197035			
100000452	5457	1	8.260413	BUSH RIVER RD	SE	RAMP & BUSH RIVER RD
100000452	5457	2	8.45863			
100000452	5457	3	8.062584			
100000452	5457	4	8.51657			
100000452	5457	5	7.400584			
100000452	5457	6	5.58568			
100000452	5457	7	7.374822			
100000452	5457	8	8.921542			
100000452	5457	9	7.441391			
100000452	5457	10	7.692269			
100000455	5457	1	4.384137	BUSH RIVER RD	NW	FRONTAGE RD & BUSH RIVER RD
100000455	5457	2	4.902425			
100000455	5457	3	5.916895			
100000455	5457	4	4.751048			
100000455	5457	5	3.708041			
100000455	5457	6	4.030367			
100000455	5457	7	4.256791			
100000455	5457	8	4.431679			
100000455	5457	9	3.163982			
100000455	5457	10	4.089549			
100000455	6538	1	49.47275	FRONTAGE RD	SW	FRONTAGE RD & BUSH RIVER RD
100000455	6538	2	42.600883			
100000455	6538	3	47.312332			
100000455	6538	4	40.176595			
100000455	6538	5	41.61488			
100000455	6538	6	40.412058			
100000455	6538	7	44.649475			
100000455	6538	8	35.032689			
100000455	6538	9	35.948427			
100000455	6538	10	37.655376			
100000455	6539	1	5.47135	BUSH RIVER RD	SE	FRONTAGE RD & BUSH RIVER RD
100000455	6539	2	6.262291			
100000455	6539	3	4.074432			
100000455	6539	4	5.593152			
100000455	6539	5	4.222594			
100000455	6539	6	3.14483			
100000455	6539	7	5.105433			
100000455	6539	8	5.030189			
100000455	6539	9	5.00068			
100000455	6539	10	5.20712			
100000467	3225	1		RAMP	SW	RAMP & I-126 WB ON RAMP FROM GREYSTONE BLVD
100000467	3225	2				
100000467	3225	3				

Node	Superlink	Run	Average Control Delay	Approach Street Name	Direction	Intersection
100000467	3225	4				
100000467	3225	5				
100000467	3225	6				
100000467	3225	7				
100000467	3225	8				
100000467	3225	9				
100000467	3225	10				
100000467	3238	1	0	RAMP	W	RAMP & I-126 WB ON RAMP FROM GREYSTONE BLVD
100000467	3238	2	0			
100000467	3238	3	0			
100000467	3238	4	0			
100000467	3238	5	0			
100000467	3238	6	0			
100000467	3238	7	0			
100000467	3238	8	0			
100000467	3238	9	0			
100000467	3238	10	0			
100000468	3228	1	0	EXIT 103 WB ON RAMP	NW	EXIT 103 WB ON RAMP & I-26 EXIT 103 WB ON RAMP
100000468	3228	2	0			
100000468	3228	3	0			
100000468	3228	4	0			
100000468	3228	5	0			
100000468	3228	6	0			
100000468	3228	7	0			
100000468	3228	8	0			
100000468	3228	9	0			
100000468	3228	10	0			
100000468	3241	1		EXIT 103 WB ON RAMP	W	EXIT 103 WB ON RAMP & I-26 EXIT 103 WB ON RAMP
100000468	3241	2	0			
100000468	3241	3				
100000468	3241	4				
100000468	3241	5				
100000468	3241	6				
100000468	3241	7				
100000468	3241	8				
100000468	3241	9	0			
100000468	3241	10	0			
100000476	3257	1	0	RAMP	N	RAMP
100000476	3257	2	0			
100000476	3257	3	0			
100000476	3257	4	0			
100000476	3257	5	0			
100000476	3257	6	0			
100000476	3257	7	0			
100000476	3257	8	0			
100000476	3257	9	0			
100000476	3257	10	0			
100000476	3262	1	0	RAMP	N	RAMP
100000476	3262	2	0			
100000476	3262	3	0			
100000476	3262	4	0			
100000476	3262	5	0			
100000476	3262	6	0			
100000476	3262	7	0			
100000476	3262	8	0			
100000476	3262	9	0			
100000476	3262	10	0			
100000494	3302	1		EXIT 106 WB ON RAMP	NW	EXIT 106 WB ON RAMP & I-26 EXIT 106 WB ON RAMP
100000494	3302	2				
100000494	3302	3				
100000494	3302	4				
100000494	3302	5				
100000494	3302	6				
100000494	3302	7				
100000494	3302	8				
100000494	3302	9				
100000494	3302	10				
100000494	3306	1	0	EXIT 106 WB ON RAMP	NW	EXIT 106 WB ON RAMP & I-26 EXIT 106 WB ON RAMP
100000494	3306	2	0			
100000494	3306	3	0			
100000494	3306	4	0			
100000494	3306	5	0			
100000494	3306	6	0			
100000494	3306	7	0			
100000494	3306	8	0			
100000494	3306	9	0			
100000494	3306	10	0			
100000497	3310	1	0	RAMP	SE	RAMP & I-26 EXIT 104 EB ON RAMP
100000497	3310	2	0			
100000497	3310	3	0			
100000497	3310	4	0			
100000497	3310	5	0			
100000497	3310	6	0			
100000497	3310	7	0			
100000497	3310	8	0			
100000497	3310	9	0			
100000497	3310	10	0			
100000497	6545	1	0	RAMP	SE	RAMP & I-26 EXIT 104 EB ON RAMP
100000497	6545	2	0			
100000497	6545	3	0			
100000497	6545	4	0			
100000497	6545	5	0			
100000497	6545	6	0			
100000497	6545	7	0			
100000497	6545	8	0			
100000497	6545	9	0			
100000497	6545	10	0			
100000503	3325	1	0	RAMP	SE	RAMP
100000503	3325	2	0			
100000503	3325	3	0			
100000503	3325	4	0			
100000503	3325	5	0			
100000503	3325	6	0			
100000503	3325	7	0			
100000503	3325	8	0			
100000503	3325	9	0			
100000503	3325	10	0			
100000503	6472	1	0		E	RAMP
100000503	6472	2	0			
100000503	6472	3	0			

Node	Superlink	Run	Average Control Delay	Approach Street Name	Direction	Intersection
100000503	6472	4	0			
100000503	6472	5	0			
100000503	6472	6	0			
100000503	6472	7	0			
100000503	6472	8	0			
100000503	6472	9	0			
100000503	6472	10	0			
100000520	3345	1		EXIT 102 WB ON RAMP	N	EXIT 102 WB ON RAMP & I-26 EXIT 102 WB ON RAMP
100000520	3345	2				
100000520	3345	3				
100000520	3345	4				
100000520	3345	5				
100000520	3345	6				
100000520	3345	7				
100000520	3345	8				
100000520	3345	9				
100000520	3345	10				
100000520	3350	1	0	EXIT 102 WB ON RAMP	N	EXIT 102 WB ON RAMP & I-26 EXIT 102 WB ON RAMP
100000520	3350	2	0			
100000520	3350	3	0			
100000520	3350	4	0			
100000520	3350	5	0			
100000520	3350	6	0			
100000520	3350	7	0			
100000520	3350	8	0			
100000520	3350	9	0			
100000520	3350	10	0			
100000523	3355	1	0	ON-RAMP from WB	S	ON-RAMP from WB
100000523	3355	2	0			
100000523	3355	3	0			
100000523	3355	4	0			
100000523	3355	5	0			
100000523	3355	6	0			
100000523	3355	7	0			
100000523	3355	8	0			
100000523	3355	9	0			
100000523	3355	10	0			
100000523	3356	1	0	ON-RAMP from EB	S	ON-RAMP from WB
100000523	3356	2	0			
100000523	3356	3	0			
100000523	3356	4	0			
100000523	3356	5	0			
100000523	3356	6	0			
100000523	3356	7	0			
100000523	3356	8	0			
100000523	3356	9	0			
100000523	3356	10	0			
100000528	3360	1		EXIT 101 WB ON RAMP	N	EXIT 101 WB ON RAMP & I-26 EXIT 101 WB ON RAMP
100000528	3360	2				
100000528	3360	3				
100000528	3360	4				
100000528	3360	5				
100000528	3360	6				
100000528	3360	7				
100000528	3360	8				
100000528	3360	9				
100000528	3360	10				
100000528	3364	1	0	EXIT 101 WB ON RAMP	N	EXIT 101 WB ON RAMP & I-26 EXIT 101 WB ON RAMP
100000528	3364	2	0			
100000528	3364	3	0			
100000528	3364	4	0			
100000528	3364	5	0			
100000528	3364	6	0			
100000528	3364	7	0			
100000528	3364	8	0			
100000528	3364	9	0			
100000528	3364	10	0			
100000702	4338	1	0	RAMP	SW	RAMP & I-20 EXIT 65 WB ON RAMP
100000702	4338	2	0			
100000702	4338	3	0			
100000702	4338	4	0			
100000702	4338	5	0			
100000702	4338	6	0			
100000702	4338	7	0			
100000702	4338	8	0			
100000702	4338	9	0			
100000702	4338	10	0			
100000702	4343	1	0	RAMP	SW	RAMP & I-20 EXIT 65 WB ON RAMP
100000702	4343	2	0			
100000702	4343	3	0			
100000702	4343	4	0			
100000702	4343	5	0			
100000702	4343	6	0			
100000702	4343	7	0			
100000702	4343	8	0			
100000702	4343	9	0			
100000702	4343	10	0			
100000707	5166	1	0	MONTICELLO RD	NW	MONTICELLO RD
100000707	5166	2	0			
100000707	5166	3	0			
100000707	5166	4	0			
100000707	5166	5	0			
100000707	5166	6	0			
100000707	5166	7	0			
100000707	5166	8	0			
100000707	5166	9	0			
100000707	5166	10	0			
100000707	5168	1	0	SERVICE RD	W	MONTICELLO RD
100000707	5168	2	0			
100000707	5168	3	0			
100000707	5168	4	0			
100000707	5168	5	0			
100000707	5168	6	0			
100000707	5168	7	0			
100000707	5168	8	0			
100000707	5168	9	0			
100000707	5168	10	0			
100000707	5174	1	1.163946	MONTICELLO RD	SE	MONTICELLO RD
100000707	5174	2	1.232041			
100000707	5174	3	1.097124			

Node	Superlink	Run	Average Control Delay	Approach Street Name	Direction	Intersection
100000707	5174	4	1.002089			
100000707	5174	5	1.873764			
100000707	5174	6	1.23943			
100000707	5174	7	1.39572			
100000707	5174	8	1.350737			
100000707	5174	9	1.22239			
100000707	5174	10	0.85485			
100000709	4352	1	0	RAMP	S	RAMP & I-20 EXIT 68 WB ON RAMP
100000709	4352	2	0			
100000709	4352	3	0			
100000709	4352	4	0			
100000709	4352	5	0			
100000709	4352	6	0			
100000709	4352	7	0			
100000709	4352	8	0			
100000709	4352	9	0			
100000709	4352	10	0			
100000709	4353	1	0	RAMP	S	RAMP & I-20 EXIT 68 WB ON RAMP
100000709	4353	2	0			
100000709	4353	3	0			
100000709	4353	4	0			
100000709	4353	5	0			
100000709	4353	6	0			
100000709	4353	7	0			
100000709	4353	8	0			
100000709	4353	9	0			
100000709	4353	10	0			
100000710	4356	1	0	I-20 EXIT 68 WB OFF RAMP	W	I-20 EXIT 68 WB OFF RAMP & SERVICE RD
100000710	4356	2	0			
100000710	4356	3	0			
100000710	4356	4	0			
100000710	4356	5	0			
100000710	4356	6	0			
100000710	4356	7	0			
100000710	4356	8	0			
100000710	4356	9	0			
100000710	4356	10	0			
100000712	5157	1	0.134053	BUCKNER RD	NE	BUCKNER RD & RAMP
100000712	5157	2	0.064766			
100000712	5157	3	0.103171			
100000712	5157	4	0.074248			
100000712	5157	5	0.079093			
100000712	5157	6	0.057726			
100000712	5157	7	0.050169			
100000712	5157	8	0.067611			
100000712	5157	9	0.123508			
100000712	5157	10	0.085063			
100000712	5160	1	13.395175	BUCKNER RD	SW	BUCKNER RD & RAMP
100000712	5160	2	15.765728			
100000712	5160	3	14.111614			
100000712	5160	4	14.28103			
100000712	5160	5	14.038825			
100000712	5160	6	14.853781			
100000712	5160	7	12.669817			
100000712	5160	8	15.641402			
100000712	5160	9	14.271838			
100000712	5160	10	11.992286			
100000804	6261	1	31.013192	TRAM RD	SW	TRAM RD & SIDNEY RD
100000804	6261	2	32.364392			
100000804	6261	3	33.472252			
100000804	6261	4	32.612314			
100000804	6261	5	40.496507			
100000804	6261	6	19.213756			
100000804	6261	7	30.654807			
100000804	6261	8	30.179175			
100000804	6261	9	24.540628			
100000804	6261	10	25.823573			
100000804	6457	1	54.421917	SIDNEY RD	NW	TRAM RD & SIDNEY RD
100000804	6457	2	30.604073			
100000804	6457	3	41.151425			
100000804	6457	4	62.062935			
100000804	6457	5	37.037238			
100000804	6457	6	44.400883			
100000804	6457	7	92.014771			
100000804	6457	8	29.458414			
100000804	6457	9	59.672759			
100000804	6457	10	40.116813			
100000804	6458	1	2.737865	TRAM RD	NE	TRAM RD & SIDNEY RD
100000804	6458	2	3.371484			
100000804	6458	3	1.974012			
100000804	6458	4	2.711858			
100000804	6458	5	3.219316			
100000804	6458	6	2.738796			
100000804	6458	7	2.786191			
100000804	6458	8	2.512804			
100000804	6458	9	2.313209			
100000804	6458	10	2.31656			
100000882	5151	1		SERVICE RD	SW	SERVICE RD
100000882	5151	2				
100000882	5151	3				
100000882	5151	4				
100000882	5151	5				
100000882	5151	6				
100000882	5151	7				
100000882	5151	8				
100000882	5151	9				
100000882	5151	10				
100000882	6446	1	0	SERVICE RD	NE	SERVICE RD
100000882	6446	2	0			
100000882	6446	3	0			
100000882	6446	4	0			
100000882	6446	5	0			
100000882	6446	6	0			
100000882	6446	7	0			
100000882	6446	8	0			
100000882	6446	9	0			
100000882	6446	10	0			
100000882	6449	1	0		N	SERVICE RD
100000882	6449	2	0			
100000882	6449	3	0			

Node	Superlink	Run	Average Control Delay	Approach Street Name	Direction	Intersection
100000882	6449	4	0			
100000882	6449	5	0			
100000882	6449	6	0			
100000882	6449	7	0			
100000882	6449	8	0			
100000882	6449	9	0			
100000882	6449	10	0			
100000883	5148	1	0	BROAD RIVER RD	NW	BROAD RIVER RD & 6448 (E)
100000883	5148	2	0			
100000883	5148	3	0.000037			
100000883	5148	4	0			
100000883	5148	5	0.000038			
100000883	5148	6	0			
100000883	5148	7	0.000041			
100000883	5148	8	0.000033			
100000883	5148	9	0			
100000883	5148	10	0.000011			
100000883	6447	1	11.109737	BROAD RIVER RD	SE	BROAD RIVER RD & 6448 (E)
100000883	6447	2	12.040553			
100000883	6447	3	11.355133			
100000883	6447	4	12.464308			
100000883	6447	5	12.732409			
100000883	6447	6	11.535965			
100000883	6447	7	12.397039			
100000883	6447	8	12.116804			
100000883	6447	9	12.06642			
100000883	6447	10	11.571046			
100000883	6448	1			W	BROAD RIVER RD & 6448 (E)
100000883	6448	2				
100000883	6448	3				
100000883	6448	4				
100000883	6448	5				
100000883	6448	6				
100000883	6448	7				
100000883	6448	8				
100000883	6448	9				
100000883	6448	10				
100000895	3229	1	0	RAMP	SW	RAMP & PINEY GROVE RD
100000895	3229	2	0			
100000895	3229	3	0			
100000895	3229	4	0			
100000895	3229	5	0			
100000895	3229	6	0			
100000895	3229	7	0			
100000895	3229	8	0			
100000895	3229	9	0			
100000895	3229	10	0			
100000895	6543	1	8.194697	PINEY GROVE RD	E	RAMP & PINEY GROVE RD
100000895	6543	2	9.977323			
100000895	6543	3	12.991213			
100000895	6543	4	9.869127			
100000895	6543	5	9.196201			
100000895	6543	6	10.341116			
100000895	6543	7	8.466798			
100000895	6543	8	11.162529			
100000895	6543	9	10.824685			
100000895	6543	10	10.493882			
100000895	6544	1	0	PINEY GROVE RD	W	RAMP & PINEY GROVE RD
100000895	6544	2	0			
100000895	6544	3	0			
100000895	6544	4	0			
100000895	6544	5	0			
100000895	6544	6	0			
100000895	6544	7	0			
100000895	6544	8	0			
100000895	6544	9	0			
100000895	6544	10	0			
100000897	3243	1	4.100407	I-126 WB OFF RAMP TO COLONIAL LIFE BLVD	NE	I-126 WB OFF RAMP TO COLONIAL LIFE BLVD
100000897	3243	2	3.818715			
100000897	3243	3	2.881277			
100000897	3243	4	3.4765			
100000897	3243	5	4.597563			
100000897	3243	6	4.412966			
100000897	3243	7	3.028945			
100000897	3243	8	4.155148			
100000897	3243	9	3.865384			
100000897	3243	10	4.385904			
100000897	5134	1	7.108632	W COLONIAL LIFE BLVD	NW	I-126 WB OFF RAMP TO COLONIAL LIFE BLVD
100000897	5134	2	7.035072			
100000897	5134	3	7.090554			
100000897	5134	4	7.074551			
100000897	5134	5	6.72844			
100000897	5134	6	7.18897			
100000897	5134	7	7.125249			
100000897	5134	8	6.743179			
100000897	5134	9	7.295388			
100000897	5134	10	7.055072			
100000897	6471	1	0.237871	COLONIAL LIFE BLVD W	S	I-126 WB OFF RAMP TO COLONIAL LIFE BLVD
100000897	6471	2	0.264588			
100000897	6471	3	0.18169			
100000897	6471	4	0.200383			
100000897	6471	5	0.304368			
100000897	6471	6	0.180324			
100000897	6471	7	0.184982			
100000897	6471	8	0.167301			
100000897	6471	9	0.246866			
100000897	6471	10	0.270477			
100000898	51	1	37.54792	I-26 EXIT 108 EB OFF RAMP	S	I-26 EXIT 108 EB OFF RAMP
100000898	51	2	37.589515			
100000898	51	3	42.690771			
100000898	51	4	39.074949			
100000898	51	5	39.974967			
100000898	51	6	35.276562			
100000898	51	7	33.887101			
100000898	51	8	37.809933			
100000898	51	9	37.538563			
100000898	51	10	41.102748			
100000898	5130	1	17.585073	BUSH RIVER RD	N	I-26 EXIT 108 EB OFF RAMP
100000898	5130	2	20.459476			
100000898	5130	3	24.279322			

Node	Superlink	Run	Average Control Delay	Approach Street Name	Direction	Intersection
100000898	5130	4	22.52981			
100000898	5130	5	23.715178			
100000898	5130	6	17.249469			
100000898	5130	7	22.060194			
100000898	5130	8	20.125451			
100000898	5130	9	19.81836			
100000898	5130	10	25.796124			
100000898	5131	1	6.334014	BUSH RIVER RD	E	I-26 EXIT 108 EB OFF RAMP
100000898	5131	2	6.984529			
100000898	5131	3	6.919838			
100000898	5131	4	6.386741			
100000898	5131	5	6.264932			
100000898	5131	6	6.701062			
100000898	5131	7	6.033115			
100000898	5131	8	7.374689			
100000898	5131	9	6.993558			
100000898	5131	10	8.306148			
100000898	6503	1	8.64233	BUSH RIVER RD	W	I-26 EXIT 108 EB OFF RAMP
100000898	6503	2	7.74555			
100000898	6503	3	7.840986			
100000898	6503	4	7.403248			
100000898	6503	5	7.365953			
100000898	6503	6	6.740699			
100000898	6503	7	7.554059			
100000898	6503	8	9.022455			
100000898	6503	9	9.084143			
100000898	6503	10	7.48			
100000899	3298	1	10.662477	EXIT 106 WB OFF RAMP	SE	EXIT 106 WB OFF RAMP & BURNING TREE RD
100000899	3298	2	11.485313			
100000899	3298	3	11.239133			
100000899	3298	4	11.260455			
100000899	3298	5	11.784281			
100000899	3298	6	16.890928			
100000899	3298	7	11.784834			
100000899	3298	8	9.906085			
100000899	3298	9	10.167971			
100000899	3298	10	10.868224			
100000899	6105	1	0	BURNING TREE RD	S	EXIT 106 WB OFF RAMP & BURNING TREE RD
100000899	6105	2	0			
100000899	6105	3	0			
100000899	6105	4	0			
100000899	6105	5	0			
100000899	6105	6	0			
100000899	6105	7	0			
100000899	6105	8	0			
100000899	6105	9	0			
100000899	6105	10	0			
100000899	6106	1	0	BURNING TREE RD	N	EXIT 106 WB OFF RAMP & BURNING TREE RD
100000899	6106	2	0			
100000899	6106	3	0			
100000899	6106	4	0			
100000899	6106	5	0			
100000899	6106	6	0			
100000899	6106	7	0			
100000899	6106	8	0			
100000899	6106	9	0			
100000899	6106	10	0			
100000902	4292	1	43.321019	EXIT 110 WB OFF RAMP	NE	SUNSET BLVD
100000902	4292	2	54.17399			
100000902	4292	3	44.018782			
100000902	4292	4	48.283349			
100000902	4292	5	44.311356			
100000902	4292	6	46.514924			
100000902	4292	7	32.290251			
100000902	4292	8	47.567694			
100000902	4292	9	35.87249			
100000902	4292	10	48.626009			
100000902	4947	1	7.927476	SUNSET BLVD	W	SUNSET BLVD
100000902	4947	2	6.707189			
100000902	4947	3	8.477836			
100000902	4947	4	8.265959			
100000902	4947	5	10.234051			
100000902	4947	6	7.020473			
100000902	4947	7	9.452621			
100000902	4947	8	7.852925			
100000902	4947	9	7.650966			
100000902	4947	10	6.932455			
100000902	4951	1	0.00008	SUNSET BLVD	E	SUNSET BLVD
100000902	4951	2	0			
100000902	4951	3	0			
100000902	4951	4	0			
100000902	4951	5	0.001159			
100000902	4951	6	0			
100000902	4951	7	0			
100000902	4951	8	0			
100000902	4951	9	0			
100000902	4951	10	0			
100000903	4289	1	48.580537	EXIT 110 WB OFF RAMP	NW	RAMP
100000903	4289	2	50.572668			
100000903	4289	3	44.661919			
100000903	4289	4	43.5498			
100000903	4289	5	47.341746			
100000903	4289	6	45.897413			
100000903	4289	7	46.543536			
100000903	4289	8	52.188938			
100000903	4289	9	48.831987			
100000903	4289	10	45.012091			
100000903	4298	1	30.623841	RAMP	SE	RAMP
100000903	4298	2	31.706251			
100000903	4298	3	31.137109			
100000903	4298	4	30.817234			
100000903	4298	5	28.510595			
100000903	4298	6	30.086124			
100000903	4298	7	31.851424			
100000903	4298	8	33.57095			
100000903	4298	9	30.833512			
100000903	4298	10	26.875719			
100000903	4950	1	13.085387	SUNSET BLVD	E	RAMP
100000903	4950	2	13.45324			
100000903	4950	3	14.049865			

Node	Superlink	Run	Average Control Delay	Approach Street Name	Direction	Intersection
100000903	4950	4	13.383428			
100000903	4950	5	13.106222			
100000903	4950	6	14.177222			
100000903	4950	7	13.212219			
100000903	4950	8	13.582734			
100000903	4950	9	13.30631			
100000903	4950	10	12.784867			
100000903	4951	1	27.768207	SUNSET BLVD	W	RAMP
100000903	4951	2	26.851207			
100000903	4951	3	30.738583			
100000903	4951	4	31.023441			
100000903	4951	5	28.544542			
100000903	4951	6	28.082785			
100000903	4951	7	26.913237			
100000903	4951	8	27.946153			
100000903	4951	9	26.574955			
100000903	4951	10	27.475203			

2040 No-Build PM

Node	Superlink	Run	Average Control Delay	Approach Street Name	Direction	Intersection
4	5081	1	4.03292	BROAD RIVER RD	W	WESTERN LN & BROAD RIVER RD
4	5081	2	2.771076			
4	5081	3	3.479059			
4	5081	4	3.234602			
4	5081	5	3.79484			
4	5081	6	3.176103			
4	5081	7	3.828813			
4	5081	8	2.951692			
4	5081	9	4.106496			
4	5081	10	3.459221			
4	6465	1	6.790249	WESTERN LN	S	WESTERN LN & BROAD RIVER RD
4	6465	2	7.30403			
4	6465	3	7.334274			
4	6465	4	7.081422			
4	6465	5	7.427878			
4	6465	6	7.6837			
4	6465	7	6.981241			
4	6465	8	7.550631			
4	6465	9	6.832073			
4	6465	10	7.448296			
4	6466	1	4.544879	BROAD RIVER RD	E	WESTERN LN & BROAD RIVER RD
4	6466	2	5.073054			
4	6466	3	4.755054			
4	6466	4	4.691728			
4	6466	5	4.83022			
4	6466	6	5.217668			
4	6466	7	5.106569			
4	6466	8	4.886524			
4	6466	9	4.818535			
4	6466	10	5.009999			
4	6467	1	4.774753	WESTERN LN	N	WESTERN LN & BROAD RIVER RD
4	6467	2	6.653231			
4	6467	3	5.938708			
4	6467	4	6.222529			
4	6467	5	6.11275			
4	6467	6	5.627165			
4	6467	7	6.50984			
4	6467	8	6.574768			
4	6467	9	5.664405			
4	6467	10	5.628894			
11	5487	1	0	MORNINGHILL DR	N	MORNINGHILL DR & BURNETTE DR
11	5487	2	0			
11	5487	3	0			
11	5487	4	0			
11	5487	5	0			
11	5487	6	0			
11	5487	7	0			
11	5487	8	0			
11	5487	9	0			
11	5487	10	0			
11	6536	1		MORNINGHILL DR	S	MORNINGHILL DR & BURNETTE DR
11	6536	2				
11	6536	3				
11	6536	4				
11	6536	5				
11	6536	6				
11	6536	7				
11	6536	8				
11	6536	9				
11	6536	10				
11	6537	1	0	BURNETTE DR	E	MORNINGHILL DR & BURNETTE DR
11	6537	2	0			
11	6537	3	0			
11	6537	4	0			
11	6537	5	0			
11	6537	6	0			
11	6537	7	0			
11	6537	8	0			
11	6537	9	0			
11	6537	10	0			
26	5488	1	0	RAMP	S	RAMP & 6502 (NW)
26	5488	2	0			
26	5488	3	0			
26	5488	4	0			
26	5488	5	0			
26	5488	6	0			
26	5488	7	0			
26	5488	8	0			
26	5488	9	0			
26	5488	10	0			
26	6501	1	11.295062	RAMP	N	RAMP & 6502 (NW)
26	6501	2	10.430841			
26	6501	3	11.337951			
26	6501	4	10.485949			
26	6501	5	10.285184			
26	6501	6	10.60916			
26	6501	7	10.612593			
26	6501	8	10.024493			
26	6501	9	9.886985			
26	6501	10	10.440074			
26	6502	1	0		SE	RAMP & 6502 (NW)
26	6502	2	0			
26	6502	3	0			
26	6502	4	0			

Node	Superlink	Run	Average Control Delay	Approach Street Name	Direction	Intersection
26	6502	5	0			
26	6502	6	0			
26	6502	7	0			
26	6502	8	0			
26	6502	9	0			
26	6502	10	0			
28	5140	1	0	GREYSTONE BLVD	S	GREYSTONE BLVD & CANDI LN
28	5140	2	0			
28	5140	3	0			
28	5140	4	0			
28	5140	5	0			
28	5140	6	0			
28	5140	7	0			
28	5140	8	0			
28	5140	9	0			
28	5140	10	0			
28	6506	1	6.862642	GREYSTONE BLVD	W	GREYSTONE BLVD & CANDI LN
28	6506	2	7.181487			
28	6506	3	7.320944			
28	6506	4	7.331144			
28	6506	5	7.905393			
28	6506	6	7.622012			
28	6506	7	6.951005			
28	6506	8	7.610463			
28	6506	9	7.611977			
28	6506	10	7.104365			
28	6507	1		CANDI LN	E	GREYSTONE BLVD & CANDI LN
28	6507	2				
28	6507	3				
28	6507	4				
28	6507	5				
28	6507	6				
28	6507	7				
28	6507	8				
28	6507	9				
28	6507	10				
41	6518	1	567.692894	BROAD RIVER RD	NW	DUTCH SQUARE BLVD & BROAD RIVER RD
41	6518	2	264.520728			
41	6518	3	306.6112			
41	6518	4	323.565382			
41	6518	5	245.40281			
41	6518	6	315.344152			
41	6518	7	184.392885			
41	6518	8	295.096196			
41	6518	9	513.84976			
41	6518	10	264.74315			
41	6519	1	78.862659	DUTCH SQUARE BLVD	E	DUTCH SQUARE BLVD & BROAD RIVER RD
41	6519	2	61.242107			
41	6519	3	55.006163			
41	6519	4	70.880645			
41	6519	5	59.519356			
41	6519	6	64.451579			
41	6519	7	47.776399			
41	6519	8	60.024378			
41	6519	9	95.005888			
41	6519	10	56.178724			
41	6521	1	4.651143	BROAD RIVER RD	SE	DUTCH SQUARE BLVD & BROAD RIVER RD
41	6521	2	4.038664			
41	6521	3	4.570866			
41	6521	4	3.712165			
41	6521	5	4.61206			
41	6521	6	3.913735			
41	6521	7	4.813695			
41	6521	8	4.99483			
41	6521	9	3.631592			
41	6521	10	4.434179			
43	6519	1	0	DUTCH SQUARE BLVD	W	DUTCH SQUARE BLVD & 6522 (N)
43	6519	2	0			
43	6519	3	0			
43	6519	4	0			
43	6519	5	0			
43	6519	6	0			
43	6519	7	0			
43	6519	8	0			
43	6519	9	0			
43	6519	10	0			
43	6520	1	434.375586	DUTCH SQUARE BLVD	E	DUTCH SQUARE BLVD & 6522 (N)
43	6520	2	278.283053			
43	6520	3	275.665896			
43	6520	4	312.015173			
43	6520	5	278.188507			
43	6520	6	259.78656			
43	6520	7	236.059525			
43	6520	8	279.672085			
43	6520	9	521.421528			
43	6520	10	249.860382			
43	6522	1	0		SW	DUTCH SQUARE BLVD & 6522 (N)
43	6522	2	0			
43	6522	3	0			
43	6522	4	0			
43	6522	5	0			
43	6522	6	0			
43	6522	7	0			
43	6522	8	0			
43	6522	9	0			
43	6522	10	0			
46	6273	1	0	PARKRIDGE DR	NE	PARKRIDGE DR & 6555 (NE)
46	6273	2	0			
46	6273	3	0			
46	6273	4	0			
46	6273	5	0			
46	6273	6	0			
46	6273	7	0			
46	6273	8	0			
46	6273	9	0			
46	6273	10	0			
46	6555	1			SW	PARKRIDGE DR & 6555 (NE)
46	6555	2				
46	6555	3				

Node	Superlink	Run	Average Control Delay	Approach Street Name	Direction	Intersection
46	6555	4				
46	6555	5				
46	6555	6				
46	6555	7				
46	6555	8				
46	6555	9				
46	6555	10				
46	6556	1	8.085512	PARKRIDGE DR	SE	PARKRIDGE DR & 6555 (NE)
46	6556	2	9.320418			
46	6556	3	7.815856			
46	6556	4	7.673263			
46	6556	5	7.486728			
46	6556	6	9.422421			
46	6556	7	7.652679			
46	6556	8	7.444278			
46	6556	9	7.249513			
46	6556	10	9.014777			
100000012	5081	1	30.638471	BROAD RIVER RD	SE	KINLEY RD
100000012	5081	2	26.007601			
100000012	5081	3	32.22489			
100000012	5081	4	31.034779			
100000012	5081	5	26.915698			
100000012	5081	6	24.923386			
100000012	5081	7	27.076866			
100000012	5081	8	27.590147			
100000012	5081	9	28.179523			
100000012	5081	10	25.994772			
100000012	6276	1	51.340718	KINLEY RD	N	KINLEY RD
100000012	6276	2	40.622856			
100000012	6276	3	44.413982			
100000012	6276	4	47.207887			
100000012	6276	5	47.203257			
100000012	6276	6	48.697459			
100000012	6276	7	38.783247			
100000012	6276	8	53.847937			
100000012	6276	9	46.996125			
100000012	6276	10	40.990044			
100000012	6307	1	276.576062	KENNERLY RD	S	KINLEY RD
100000012	6307	2	258.761843			
100000012	6307	3	388.476602			
100000012	6307	4	271.987399			
100000012	6307	5	314.272096			
100000012	6307	6	369.288859			
100000012	6307	7	257.800847			
100000012	6307	8	264.176347			
100000012	6307	9	266.144555			
100000012	6307	10	415.951764			
100000012	6308	1	128.689432	BROAD RIVER RD	NW	KINLEY RD
100000012	6308	2	153.960896			
100000012	6308	3	172.942383			
100000012	6308	4	131.154672			
100000012	6308	5	156.915061			
100000012	6308	6	191.402751			
100000012	6308	7	150.038447			
100000012	6308	8	133.845215			
100000012	6308	9	199.196931			
100000012	6308	10	159.665614			
100000025	6267	1	0	PARKRIDGE DR	NW	CLUB RD & PARKRIDGE DR
100000025	6267	2	0			
100000025	6267	3	0			
100000025	6267	4	0			
100000025	6267	5	0			
100000025	6267	6	0			
100000025	6267	7	0			
100000025	6267	8	0			
100000025	6267	9	0			
100000025	6267	10	0			
100000025	6273	1	0	PARKRIDGE DR	SE	CLUB RD & PARKRIDGE DR
100000025	6273	2	0			
100000025	6273	3	0			
100000025	6273	4	0			
100000025	6273	5	0			
100000025	6273	6	0			
100000025	6273	7	0			
100000025	6273	8	0			
100000025	6273	9	0			
100000025	6273	10	0			
100000025	6304	1		CLUB RD	S	CLUB RD & PARKRIDGE DR
100000025	6304	2				
100000025	6304	3				
100000025	6304	4				
100000025	6304	5				
100000025	6304	6				
100000025	6304	7				
100000025	6304	8				
100000025	6304	9				
100000025	6304	10				
100000037	5101	1	34.325094	HARBISON BLVD	NE	BROAD RIVER RD & HARBISON BLVD
100000037	5101	2	30.636909			
100000037	5101	3	27.904632			
100000037	5101	4	26.476778			
100000037	5101	5	36.854877			
100000037	5101	6	26.811047			
100000037	5101	7	29.823868			
100000037	5101	8	25.390753			
100000037	5101	9	32.235658			
100000037	5101	10	69.455912			
100000037	6317	1	13.598121	BROAD RIVER RD	SE	BROAD RIVER RD & HARBISON BLVD
100000037	6317	2	12.445658			
100000037	6317	3	14.257806			
100000037	6317	4	13.441622			
100000037	6317	5	10.754325			
100000037	6317	6	12.492655			
100000037	6317	7	11.637761			
100000037	6317	8	14.093303			
100000037	6317	9	13.892083			
100000037	6317	10	13.07806			
100000037	6320	1	62.377568	BROAD RIVER RD	NW	BROAD RIVER RD & HARBISON BLVD
100000037	6320	2	81.388975			
100000037	6320	3	53.139344			

Node	Superlink	Run	Average Control Delay	Approach Street Name	Direction	Intersection
100000037	6320	4	89.816351			
100000037	6320	5	59.670936			
100000037	6320	6	116.640559			
100000037	6320	7	102.500768			
100000037	6320	8	54.755334			
100000037	6320	9	58.368778			
100000037	6320	10	118.067714			
100000038	6232	1	0	BROAD RIVER RD	NW	BROAD RIVER RD & 6311 (S)
100000038	6232	2	0			
100000038	6232	3	0			
100000038	6232	4	0			
100000038	6232	5	0			
100000038	6232	6	0			
100000038	6232	7	0			
100000038	6232	8	0			
100000038	6232	9	0			
100000038	6232	10	0			
100000038	6311	1	11.398058		N	BROAD RIVER RD & 6311 (S)
100000038	6311	2	14.14458			
100000038	6311	3	14.045883			
100000038	6311	4	6.511795			
100000038	6311	5	11.897187			
100000038	6311	6	12.619259			
100000038	6311	7	4.886374			
100000038	6311	8	5.951323			
100000038	6311	9	18.488656			
100000038	6311	10	12.698183			
100000038	6312	1	0.0001	BROAD RIVER RD	SE	BROAD RIVER RD & 6311 (S)
100000038	6312	2	0.003678			
100000038	6312	3	0			
100000038	6312	4	0			
100000038	6312	5	0.00053			
100000038	6312	6	0			
100000038	6312	7	0			
100000038	6312	8	0			
100000038	6312	9	0			
100000038	6312	10	0.014197			
100000041	6281	1	10.215478	LAKE MURRAY BLVD	W	LAKE MURRAY BLVD & 6311 (N)
100000041	6281	2	8.409977			
100000041	6281	3	0.003436			
100000041	6281	4	4.951042			
100000041	6281	5	7.76594			
100000041	6281	6	11.033371			
100000041	6281	7	0.061642			
100000041	6281	8	0			
100000041	6281	9	10.764258			
100000041	6281	10	25.58041			
100000041	6311	1			SW	LAKE MURRAY BLVD & 6311 (N)
100000041	6311	2				
100000041	6311	3				
100000041	6311	4				
100000041	6311	5				
100000041	6311	6				
100000041	6311	7				
100000041	6311	8				
100000041	6311	9				
100000041	6311	10				
100000041	6313	1	0.140183	LAKE MURRAY BLVD	E	LAKE MURRAY BLVD & 6311 (N)
100000041	6313	2	1.329804			
100000041	6313	3	0.288384			
100000041	6313	4	0.119447			
100000041	6313	5	0.13948			
100000041	6313	6	0.04913			
100000041	6313	7	0.057814			
100000041	6313	8	0.203834			
100000041	6313	9	0.139495			
100000041	6313	10	0.529734			
100000046	5511	1	225.87948	BUSH RIVER RD	E	BUSH RIVER RD
100000046	5511	2	141.580912			
100000046	5511	3	159.361754			
100000046	5511	4	171.376328			
100000046	5511	5	154.445079			
100000046	5511	6	101.644846			
100000046	5511	7	77.886941			
100000046	5511	8	246.592305			
100000046	5511	9	197.644128			
100000046	5511	10	152.449466			
100000046	6323	1	427.296252	BROAD RIVER RD	NW	BUSH RIVER RD
100000046	6323	2	165.191376			
100000046	6323	3	253.402057			
100000046	6323	4	214.452951			
100000046	6323	5	174.547641			
100000046	6323	6	210.640824			
100000046	6323	7	117.39282			
100000046	6323	8	246.381188			
100000046	6323	9	342.923196			
100000046	6323	10	225.220661			
100000046	6324	1	63.566151	ELM ABODE TER	SW	BUSH RIVER RD
100000046	6324	2	99.399798			
100000046	6324	3	71.498556			
100000046	6324	4	67.609626			
100000046	6324	5	96.226244			
100000046	6324	6	151.302826			
100000046	6324	7	90.634858			
100000046	6324	8	94.348863			
100000046	6324	9	73.112941			
100000046	6324	10	100.056892			
100000046	6518	1	41.510462	BROAD RIVER RD	SE	BUSH RIVER RD
100000046	6518	2	40.85458			
100000046	6518	3	37.655967			
100000046	6518	4	36.371798			
100000046	6518	5	44.723347			
100000046	6518	6	35.345163			
100000046	6518	7	49.76167			
100000046	6518	8	39.044669			
100000046	6518	9	33.462241			
100000046	6518	10	56.988742			
100000049	6318	1	38.944427	LOST CREEK DR	S	LOST CREEK DR
100000049	6318	2	60.734309			
100000049	6318	3	39.899332			

Node	Superlink	Run	Average Control Delay	Approach Street Name	Direction	Intersection
100000049	6318	4	43.637749			
100000049	6318	5	41.17363			
100000049	6318	6	64.736703			
100000049	6318	7	51.582862			
100000049	6318	8	45.211287			
100000049	6318	9	42.622106			
100000049	6318	10	68.978621			
100000049	6319	1	50.499513	PINEY WOODS RD	N	LOST CREEK DR
100000049	6319	2	41.000272			
100000049	6319	3	41.005171			
100000049	6319	4	63.002254			
100000049	6319	5	36.885359			
100000049	6319	6	91.750974			
100000049	6319	7	78.844517			
100000049	6319	8	72.72266			
100000049	6319	9	29.743468			
100000049	6319	10	105.352166			
100000049	6320	1	14.697044	BROAD RIVER RD	SE	LOST CREEK DR
100000049	6320	2	22.474486			
100000049	6320	3	16.193894			
100000049	6320	4	16.637586			
100000049	6320	5	23.933433			
100000049	6320	6	20.018199			
100000049	6320	7	15.17666			
100000049	6320	8	12.175314			
100000049	6320	9	21.871124			
100000049	6320	10	17.575146			
100000049	6322	1	42.994761	BROAD RIVER RD	NW	LOST CREEK DR
100000049	6322	2	48.655311			
100000049	6322	3	24.476658			
100000049	6322	4	40.496534			
100000049	6322	5	32.912509			
100000049	6322	6	107.321616			
100000049	6322	7	76.50987			
100000049	6322	8	34.74958			
100000049	6322	9	26.457882			
100000049	6322	10	49.840165			
100000068	6321	1	19.946724	PINEY GROVE RD	E	BROAD RIVER RD & PINEY GROVE RD
100000068	6321	2	21.051774			
100000068	6321	3	19.094564			
100000068	6321	4	15.857749			
100000068	6321	5	17.485923			
100000068	6321	6	19.085131			
100000068	6321	7	18.848368			
100000068	6321	8	18.044091			
100000068	6321	9	17.140106			
100000068	6321	10	18.530277			
100000068	6322	1	2.609763	BROAD RIVER RD	SE	BROAD RIVER RD & PINEY GROVE RD
100000068	6322	2	1.875065			
100000068	6322	3	2.596718			
100000068	6322	4	2.156884			
100000068	6322	5	1.518193			
100000068	6322	6	2.476729			
100000068	6322	7	2.280812			
100000068	6322	8	1.965415			
100000068	6322	9	2.21218			
100000068	6322	10	2.296214			
100000068	6357	1	3.326539	BROAD RIVER RD	NW	BROAD RIVER RD & PINEY GROVE RD
100000068	6357	2	3.650553			
100000068	6357	3	3.087731			
100000068	6357	4	3.810355			
100000068	6357	5	3.482593			
100000068	6357	6	3.205509			
100000068	6357	7	3.398992			
100000068	6357	8	3.478349			
100000068	6357	9	2.945085			
100000068	6357	10	4.271091			
100000085	6325	1	0.015173	BROAD RIVER RD	E	BROAD RIVER RD
100000085	6325	2	0.113489			
100000085	6325	3	0.122833			
100000085	6325	4	0.120232			
100000085	6325	5	0.074774			
100000085	6325	6	0.165166			
100000085	6325	7	0.132364			
100000085	6325	8	0.076281			
100000085	6325	9	0.07532			
100000085	6325	10	0.056598			
100000085	6329	1	2.428896	RT	E	BROAD RIVER RD
100000085	6329	2	3.751887			
100000085	6329	3	3.430881			
100000085	6329	4	2.262377			
100000085	6329	5	2.559118			
100000085	6329	6	3.159708			
100000085	6329	7	2.442308			
100000085	6329	8	3.068289			
100000085	6329	9	2.233637			
100000085	6329	10	3.036677			
100000085	6330	1	198.647461	BROAD RIVER RD	W	BROAD RIVER RD
100000085	6330	2	49.721242			
100000085	6330	3	72.69873			
100000085	6330	4	81.886082			
100000085	6330	5	99.278322			
100000085	6330	6	138.945173			
100000085	6330	7	15.171711			
100000085	6330	8	85.271075			
100000085	6330	9	246.323963			
100000085	6330	10	68.878993			
100000085	6331	1	93.740181	RIVERHILL CIR	W	BROAD RIVER RD
100000085	6331	2	27.482924			
100000085	6331	3	48.757193			
100000085	6331	4	76.408072			
100000085	6331	5	109.765969			
100000085	6331	6	74.96018			
100000085	6331	7	36.073082			
100000085	6331	8	92.580841			
100000085	6331	9	163.435766			
100000085	6331	10	77.340481			
100000093	4299	1	102.946498	RAMP	SW	SUNSET BLVD & RAMP
100000093	4299	2	116.813733			
100000093	4299	3	90.633227			

Node	Superlink	Run	Average Control Delay	Approach Street Name	Direction	Intersection
100000093	4299	4	104.694276			
100000093	4299	5	89.544568			
100000093	4299	6	93.752596			
100000093	4299	7	102.711475			
100000093	4299	8	118.537637			
100000093	4299	9	91.561694			
100000093	4299	10	98.174609			
100000093	4949	1	39.291373	SUNSET BLVD	E	SUNSET BLVD & RAMP
100000093	4949	2	37.241322			
100000093	4949	3	38.410735			
100000093	4949	4	34.609172			
100000093	4949	5	36.065947			
100000093	4949	6	37.077199			
100000093	4949	7	28.797233			
100000093	4949	8	37.801435			
100000093	4949	9	35.196044			
100000093	4949	10	35.704587			
100000093	4950	1	0.002011	SUNSET BLVD	W	SUNSET BLVD & RAMP
100000093	4950	2	0.109279			
100000093	4950	3	0.02711			
100000093	4950	4	0.001816			
100000093	4950	5	0.118611			
100000093	4950	6	0.001724			
100000093	4950	7	0.001437			
100000093	4950	8	0.003007			
100000093	4950	9	0.003547			
100000093	4950	10	0.001606			
100000120	5031	1	9.656612	SUNSET BLVD	W	CORLEY MILL RD
100000120	5031	2	9.8434			
100000120	5031	3	10.329943			
100000120	5031	4	11.052415			
100000120	5031	5	9.775798			
100000120	5031	6	10.39201			
100000120	5031	7	9.870526			
100000120	5031	8	10.936853			
100000120	5031	9	10.134362			
100000120	5031	10	10.803347			
100000120	5352	1	12.846092	CORLEY MILL RD	S	CORLEY MILL RD
100000120	5352	2	12.555755			
100000120	5352	3	12.355272			
100000120	5352	4	13.179689			
100000120	5352	5	14.062249			
100000120	5352	6	12.728364			
100000120	5352	7	13.208632			
100000120	5352	8	12.6087			
100000120	5352	9	13.142488			
100000120	5352	10	13.147998			
100000120	5353	1	40.226498	GINNY LN	N	CORLEY MILL RD
100000120	5353	2	37.552378			
100000120	5353	3	41.09406			
100000120	5353	4	37.37798			
100000120	5353	5	39.060203			
100000120	5353	6	41.18394			
100000120	5353	7	35.509534			
100000120	5353	8	34.694662			
100000120	5353	9	39.737213			
100000120	5353	10	32.726251			
100000120	5355	1	35.145542	SUNSET BLVD	E	CORLEY MILL RD
100000120	5355	2	33.780824			
100000120	5355	3	35.125107			
100000120	5355	4	36.153474			
100000120	5355	5	35.150937			
100000120	5355	6	33.508513			
100000120	5355	7	34.788834			
100000120	5355	8	33.94972			
100000120	5355	9	36.360918			
100000120	5355	10	36.105586			
100000134	2048	1	21.908706	RAMP	SW	SUNSET BLVD & RAMP
100000134	2048	2	21.29452			
100000134	2048	3	21.638698			
100000134	2048	4	23.340969			
100000134	2048	5	25.286355			
100000134	2048	6	25.809617			
100000134	2048	7	22.485158			
100000134	2048	8	25.52814			
100000134	2048	9	23.084246			
100000134	2048	10	23.760247			
100000134	5027	1	6.76407	SUNSET BLVD	NW	SUNSET BLVD & RAMP
100000134	5027	2	7.307469			
100000134	5027	3	9.855137			
100000134	5027	4	7.875402			
100000134	5027	5	7.565876			
100000134	5027	6	8.752315			
100000134	5027	7	9.715011			
100000134	5027	8	6.409112			
100000134	5027	9	8.332848			
100000134	5027	10	6.294767			
100000134	5030	1	4.478785	SUNSET BLVD	SE	SUNSET BLVD & RAMP
100000134	5030	2	5.154556			
100000134	5030	3	5.406916			
100000134	5030	4	4.359593			
100000134	5030	5	4.248115			
100000134	5030	6	3.5769			
100000134	5030	7	4.211412			
100000134	5030	8	4.205137			
100000134	5030	9	4.441875			
100000134	5030	10	4.942451			
100000135	2039	1	11.984489	I-20 EB OFF-RAMP	NE	SUNSET BLVD & I-20 EB OFF-RAMP
100000135	2039	2	11.448427			
100000135	2039	3	13.12213			
100000135	2039	4	12.118332			
100000135	2039	5	13.367953			
100000135	2039	6	11.799661			
100000135	2039	7	13.009353			
100000135	2039	8	12.467007			
100000135	2039	9	12.865949			
100000135	2039	10	12.657485			
100000135	5022	1	4.394052	SUNSET BLVD	SE	SUNSET BLVD & I-20 EB OFF-RAMP
100000135	5022	2	5.096383			
100000135	5022	3	4.287881			

Node	Superlink	Run	Average Control Delay	Approach Street Name	Direction	Intersection
100000135	5022	4	4.837344			
100000135	5022	5	4.962115			
100000135	5022	6	5.12956			
100000135	5022	7	4.040287			
100000135	5022	8	4.920556			
100000135	5022	9	4.810424			
100000135	5022	10	5.071547			
100000135	5023	1	4.063535	SUNSET BLVD	NW	SUNSET BLVD & I-20 EB OFF-RAMP
100000135	5023	2	5.161759			
100000135	5023	3	5.090181			
100000135	5023	4	4.700486			
100000135	5023	5	4.99009			
100000135	5023	6	4.801347			
100000135	5023	7	4.634928			
100000135	5023	8	5.198196			
100000135	5023	9	5.156			
100000135	5023	10	4.724458			
100000136	5021	1	22.291809	SUNSET BLVD	SE	SUNSET BLVD
100000136	5021	2	21.143555			
100000136	5021	3	20.866801			
100000136	5021	4	19.903833			
100000136	5021	5	22.655615			
100000136	5021	6	22.319201			
100000136	5021	7	19.554193			
100000136	5021	8	21.551716			
100000136	5021	9	20.388432			
100000136	5021	10	23.761498			
100000136	5362	1	31.847947	CROMER RD	NE	SUNSET BLVD
100000136	5362	2	30.146767			
100000136	5362	3	27.881762			
100000136	5362	4	32.34292			
100000136	5362	5	28.767976			
100000136	5362	6	32.10819			
100000136	5362	7	30.037359			
100000136	5362	8	30.267221			
100000136	5362	9	33.045075			
100000136	5362	10	28.211065			
100000136	5364	1	104.924773	SUNSET BLVD	NW	SUNSET BLVD
100000136	5364	2	100.877353			
100000136	5364	3	95.02916			
100000136	5364	4	97.724325			
100000136	5364	5	99.295821			
100000136	5364	6	93.766145			
100000136	5364	7	92.230623			
100000136	5364	8	97.972375			
100000136	5364	9	96.412401			
100000136	5364	10	98.010546			
100000136	6459	1	24.230852	DAVEGA DR	SW	SUNSET BLVD
100000136	6459	2	26.143418			
100000136	6459	3	21.738398			
100000136	6459	4	26.422171			
100000136	6459	5	25.014303			
100000136	6459	6	26.351468			
100000136	6459	7	24.173889			
100000136	6459	8	27.391284			
100000136	6459	9	26.065379			
100000136	6459	10	27.330368			
100000138	2052	1	0	RAMP	NW	RAMP
100000138	2052	2	0			
100000138	2052	3	0			
100000138	2052	4	0			
100000138	2052	5	0			
100000138	2052	6	0			
100000138	2052	7	0			
100000138	2052	8	0			
100000138	2052	9	0			
100000138	2052	10	0			
100000138	5030	1	0	SUNSET BLVD	NW	RAMP
100000138	5030	2	0			
100000138	5030	3	0			
100000138	5030	4	0			
100000138	5030	5	0			
100000138	5030	6	0			
100000138	5030	7	0			
100000138	5030	8	0			
100000138	5030	9	0			
100000138	5030	10	0			
100000138	6553	1	6.33645	SUNSET BLVD	SE	RAMP
100000138	6553	2	6.811019			
100000138	6553	3	5.399312			
100000138	6553	4	6.622974			
100000138	6553	5	6.55766			
100000138	6553	6	4.87554			
100000138	6553	7	5.571562			
100000138	6553	8	6.197625			
100000138	6553	9	6.633268			
100000138	6553	10	6.935366			
100000139	2065	1	24.242404	RAMP	S	RAMP & BUSH RIVER RD
100000139	2065	2	22.8364			
100000139	2065	3	25.655532			
100000139	2065	4	25.519768			
100000139	2065	5	23.752085			
100000139	2065	6	26.475157			
100000139	2065	7	23.41918			
100000139	2065	8	26.356764			
100000139	2065	9	27.737361			
100000139	2065	10	26.560204			
100000139	5033	1	6.337666	BUSH RIVER RD	NW	RAMP & BUSH RIVER RD
100000139	5033	2	6.614515			
100000139	5033	3	6.052418			
100000139	5033	4	6.27122			
100000139	5033	5	6.638223			
100000139	5033	6	6.740491			
100000139	5033	7	5.977631			
100000139	5033	8	7.809739			
100000139	5033	9	6.88013			
100000139	5033	10	6.627029			
100000139	5034	1	6.677823	BUSH RIVER RD	SE	RAMP & BUSH RIVER RD
100000139	5034	2	7.509223			
100000139	5034	3	6.671796			

Node	Superlink	Run	Average Control Delay	Approach Street Name	Direction	Intersection
100000139	5034	4	7.724712			
100000139	5034	5	6.883263			
100000139	5034	6	7.647365			
100000139	5034	7	6.878795			
100000139	5034	8	6.835903			
100000139	5034	9	7.048626			
100000139	5034	10	7.253472			
100000140	5376	1	91.468317	SUNSET BLVD	W	SUMMER PLACE DR
100000140	5376	2	87.295875			
100000140	5376	3	70.281337			
100000140	5376	4	84.32038			
100000140	5376	5	83.498587			
100000140	5376	6	72.0342			
100000140	5376	7	73.444374			
100000140	5376	8	76.530985			
100000140	5376	9	68.62604			
100000140	5376	10	86.259543			
100000140	5378	1	123.851735	SUMMER PLACE DR	N	SUMMER PLACE DR
100000140	5378	2	173.037688			
100000140	5378	3	166.377375			
100000140	5378	4	73.073195			
100000140	5378	5	204.411895			
100000140	5378	6	72.197192			
100000140	5378	7	161.969			
100000140	5378	8	174.38602			
100000140	5378	9	54.929573			
100000140	5378	10	167.266899			
100000140	6489	1		FAIRLANE DR	S	SUMMER PLACE DR
100000140	6489	2				
100000140	6489	3				
100000140	6489	4				
100000140	6489	5				
100000140	6489	6				
100000140	6489	7				
100000140	6489	8				
100000140	6489	9				
100000140	6489	10				
100000140	6764	1	7.148323	SUNSET BLVD	E	SUMMER PLACE DR
100000140	6764	2	7.458754			
100000140	6764	3	5.702519			
100000140	6764	4	7.902449			
100000140	6764	5	6.274306			
100000140	6764	6	9.725101			
100000140	6764	7	8.520372			
100000140	6764	8	7.166014			
100000140	6764	9	6.689918			
100000140	6764	10	8.382112			
100000142	2053	1	9.791127	RAMP	NE	BUSH RIVER RD & RAMP
100000142	2053	2	9.384089			
100000142	2053	3	8.058614			
100000142	2053	4	9.505025			
100000142	2053	5	8.98661			
100000142	2053	6	8.6382			
100000142	2053	7	8.866627			
100000142	2053	8	8.776306			
100000142	2053	9	9.958677			
100000142	2053	10	9.078998			
100000142	5036	1	13.254509	BUSH RIVER RD	SE	BUSH RIVER RD & RAMP
100000142	5036	2	13.378537			
100000142	5036	3	11.736447			
100000142	5036	4	12.682913			
100000142	5036	5	13.480573			
100000142	5036	6	12.447662			
100000142	5036	7	14.081714			
100000142	5036	8	12.663794			
100000142	5036	9	10.114824			
100000142	5036	10	12.804801			
100000142	5037	1	5.756937	BUSH RIVER RD	NW	BUSH RIVER RD & RAMP
100000142	5037	2	5.792047			
100000142	5037	3	7.01581			
100000142	5037	4	6.043182			
100000142	5037	5	5.952424			
100000142	5037	6	5.692137			
100000142	5037	7	6.432112			
100000142	5037	8	6.180726			
100000142	5037	9	4.973677			
100000142	5037	10	5.559797			
100000143	5372	1	0	SUNSET BLVD	E	SUNSET BLVD & HEBRON DR
100000143	5372	2	0			
100000143	5372	3	0			
100000143	5372	4	0			
100000143	5372	5	0			
100000143	5372	6	0			
100000143	5372	7	0			
100000143	5372	8	0			
100000143	5372	9	0			
100000143	5372	10	0			
100000143	6763	1		HEBRON DR	N	SUNSET BLVD & HEBRON DR
100000143	6763	2				
100000143	6763	3				
100000143	6763	4				
100000143	6763	5				
100000143	6763	6				
100000143	6763	7				
100000143	6763	8				
100000143	6763	9				
100000143	6763	10				
100000143	6764	1	0	SUNSET BLVD	W	SUNSET BLVD & HEBRON DR
100000143	6764	2	0			
100000143	6764	3	0			
100000143	6764	4	0			
100000143	6764	5	0			
100000143	6764	6	0			
100000143	6764	7	0			
100000143	6764	8	0			
100000143	6764	9	0			
100000143	6764	10	0			
100000144	5376	1	23.388007	SUNSET BLVD	E	SUNSET BLVD
100000144	5376	2	20.885595			
100000144	5376	3	16.044009			

Node	Superlink	Run	Average Control Delay	Approach Street Name	Direction	Intersection
100000144	5376	4	58.99351			
100000144	5376	5	15.897413			
100000144	5376	6	133.453293			
100000144	5376	7	15.959166			
100000144	5376	8	15.396454			
100000144	5376	9	12.228042			
100000144	5376	10	21.31182			
100000144	6760	1	180.394047	W. HOSPTIAL DR	S	SUNSET BLVD
100000144	6760	2	138.610507			
100000144	6760	3	132.015303			
100000144	6760	4	137.45753			
100000144	6760	5	128.487558			
100000144	6760	6	173.38104			
100000144	6760	7	140.489785			
100000144	6760	8	163.056921			
100000144	6760	9	139.23825			
100000144	6760	10	164.508661			
100000144	6761	1		SUNSET CT	N	SUNSET BLVD
100000144	6761	2				
100000144	6761	3				
100000144	6761	4				
100000144	6761	5				
100000144	6761	6				
100000144	6761	7				
100000144	6761	8				
100000144	6761	9				
100000144	6761	10				
100000144	6762	1	62.900349	SUNSET BLVD	W	SUNSET BLVD
100000144	6762	2	64.452966			
100000144	6762	3	53.695206			
100000144	6762	4	62.392062			
100000144	6762	5	61.94932			
100000144	6762	6	52.200009			
100000144	6762	7	52.057334			
100000144	6762	8	56.741543			
100000144	6762	9	45.538774			
100000144	6762	10	60.829431			
100000150	3361	1	17.773551	I-26 EXIT 101 EB OFF RAMP	SW	I-26 EXIT 101 EB OFF RAMP & BROAD RIVER RD
100000150	3361	2	17.107833			
100000150	3361	3	19.072339			
100000150	3361	4	17.766476			
100000150	3361	5	18.302054			
100000150	3361	6	17.267141			
100000150	3361	7	16.797465			
100000150	3361	8	17.808016			
100000150	3361	9	21.544066			
100000150	3361	10	16.1205			
100000150	5071	1	0	BROAD RIVER RD	E	I-26 EXIT 101 EB OFF RAMP & BROAD RIVER RD
100000150	5071	2	0			
100000150	5071	3	0			
100000150	5071	4	0			
100000150	5071	5	0			
100000150	5071	6	0			
100000150	5071	7	0			
100000150	5071	8	0			
100000150	5071	9	0			
100000150	5071	10	0			
100000150	5073	1	0.041822	BROAD RIVER RD	W	I-26 EXIT 101 EB OFF RAMP & BROAD RIVER RD
100000150	5073	2	0.057453			
100000150	5073	3	0.057366			
100000150	5073	4	0.050534			
100000150	5073	5	0.059919			
100000150	5073	6	0.051478			
100000150	5073	7	0.054572			
100000150	5073	8	0.030509			
100000150	5073	9	0.040881			
100000150	5073	10	0.049683			
100000151	5072	1	2.356931	BROAD RIVER RD	E	BROAD RIVER RD & ON-RAMP from WB
100000151	5072	2	2.23121			
100000151	5072	3	1.937764			
100000151	5072	4	1.874178			
100000151	5072	5	1.897129			
100000151	5072	6	1.892913			
100000151	5072	7	1.707415			
100000151	5072	8	3.112897			
100000151	5072	9	1.971401			
100000151	5072	10	2.115735			
100000151	5075	1	1.474775	BROAD RIVER RD	W	BROAD RIVER RD & ON-RAMP from WB
100000151	5075	2	1.661783			
100000151	5075	3	1.654656			
100000151	5075	4	1.927904			
100000151	5075	5	1.494908			
100000151	5075	6	1.634272			
100000151	5075	7	1.235079			
100000151	5075	8	1.660286			
100000151	5075	9	1.577655			
100000151	5075	10	1.560287			
100000155	6084	1	4.804204	BROAD RIVER RD	N	BEATTY RD & BROAD RIVER RD
100000155	6084	2	4.019732			
100000155	6084	3	3.992117			
100000155	6084	4	4.355846			
100000155	6084	5	5.218935			
100000155	6084	6	3.69254			
100000155	6084	7	5.002255			
100000155	6084	8	4.112107			
100000155	6084	9	4.05951			
100000155	6084	10	3.723922			
100000155	6355	1	28.687339	BEATTY RD	E	BEATTY RD & BROAD RIVER RD
100000155	6355	2	27.758536			
100000155	6355	3	24.532186			
100000155	6355	4	27.620758			
100000155	6355	5	22.38869			
100000155	6355	6	28.184849			
100000155	6355	7	24.501176			
100000155	6355	8	24.722851			
100000155	6355	9	29.979939			
100000155	6355	10	20.076539			
100000155	6357	1	12.915287	BROAD RIVER RD	S	BEATTY RD & BROAD RIVER RD
100000155	6357	2	13.036419			
100000155	6357	3	12.00254			

Node	Superlink	Run	Average Control Delay	Approach Street Name	Direction	Intersection
100000155	6357	4	12.118893			
100000155	6357	5	13.381365			
100000155	6357	6	11.117893			
100000155	6357	7	12.483227			
100000155	6357	8	11.231503			
100000155	6357	9	12.333902			
100000155	6357	10	11.39523			
100000163	4947	1	5.486951	SUNSET BLVD	E	MCSWAIN DR
100000163	4947	2	4.798985			
100000163	4947	3	4.717291			
100000163	4947	4	5.571941			
100000163	4947	5	5.703202			
100000163	4947	6	4.955493			
100000163	4947	7	4.786633			
100000163	4947	8	5.36746			
100000163	4947	9	5.661334			
100000163	4947	10	6.002062			
100000163	5388	1	18.637216	SUNSET BLVD	W	MCSWAIN DR
100000163	5388	2	18.142869			
100000163	5388	3	13.615027			
100000163	5388	4	14.95102			
100000163	5388	5	15.189694			
100000163	5388	6	12.408649			
100000163	5388	7	8.364987			
100000163	5388	8	12.062948			
100000163	5388	9	11.921583			
100000163	5388	10	14.735512			
100000163	5389	1	42.650592	MCSWAIN DR	S	MCSWAIN DR
100000163	5389	2	55.561109			
100000163	5389	3	40.484188			
100000163	5389	4	46.936068			
100000163	5389	5	44.933126			
100000163	5389	6	37.20982			
100000163	5389	7	36.494789			
100000163	5389	8	42.583678			
100000163	5389	9	32.587363			
100000163	5389	10	40.326075			
100000163	5418	1	57.701645	CHRIS DR	N	MCSWAIN DR
100000163	5418	2	68.293837			
100000163	5418	3	61.820872			
100000163	5418	4	71.193304			
100000163	5418	5	61.08319			
100000163	5418	6	53.87807			
100000163	5418	7	60.849961			
100000163	5418	8	67.938781			
100000163	5418	9	64.892275			
100000163	5418	10	57.473363			
100000164	3354	1	0	I-26 EXIT 102 EB OFF RAMP	W	LAKE MURRAY BLVD & I-26 EXIT 102 EB OFF RAMP
100000164	3354	2	0			
100000164	3354	3	0			
100000164	3354	4	0			
100000164	3354	5	0			
100000164	3354	6	0			
100000164	3354	7	0			
100000164	3354	8	0			
100000164	3354	9	0			
100000164	3354	10	0			
100000164	5084	1	0	LAKE MURRAY BLVD	E	LAKE MURRAY BLVD & I-26 EXIT 102 EB OFF RAMP
100000164	5084	2	0			
100000164	5084	3	0			
100000164	5084	4	0			
100000164	5084	5	0			
100000164	5084	6	0			
100000164	5084	7	0			
100000164	5084	8	0			
100000164	5084	9	0			
100000164	5084	10	0			
100000164	5085	1	0	LAKE MURRAY BLVD	W	LAKE MURRAY BLVD & I-26 EXIT 102 EB OFF RAMP
100000164	5085	2	0			
100000164	5085	3	0			
100000164	5085	4	0			
100000164	5085	5	0			
100000164	5085	6	0			
100000164	5085	7	0			
100000164	5085	8	0			
100000164	5085	9	0			
100000164	5085	10	0			
100000165	3330	1	49.86509	EXIT 103 WB OFF RAMP	SE	HARBISON BLVD
100000165	3330	2	48.148516			
100000165	3330	3	49.243121			
100000165	3330	4	47.903207			
100000165	3330	5	49.888098			
100000165	3330	6	49.231022			
100000165	3330	7	50.274217			
100000165	3330	8	46.052087			
100000165	3330	9	48.853005			
100000165	3330	10	47.770904			
100000165	5096	1	14.077222	HARBISON BLVD	NE	HARBISON BLVD
100000165	5096	2	13.061335			
100000165	5096	3	11.882126			
100000165	5096	4	12.277968			
100000165	5096	5	12.337638			
100000165	5096	6	12.749887			
100000165	5096	7	13.306222			
100000165	5096	8	13.060082			
100000165	5096	9	12.745719			
100000165	5096	10	12.53428			
100000165	5102	1	8.458876	HARBISON BLVD	SW	HARBISON BLVD
100000165	5102	2	8.530747			
100000165	5102	3	9.315601			
100000165	5102	4	8.422018			
100000165	5102	5	8.993971			
100000165	5102	6	9.126561			
100000165	5102	7	7.687638			
100000165	5102	8	8.544866			
100000165	5102	9	8.021574			
100000165	5102	10	8.312953			
100000165	5103	1	133.688695	WOODCROSS DR	NW	HARBISON BLVD
100000165	5103	2	129.200152			
100000165	5103	3	125.727745			

Node	Superlink	Run	Average Control Delay	Approach Street Name	Direction	Intersection
100000165	5103	4	135.108985			
100000165	5103	5	126.391216			
100000165	5103	6	126.813952			
100000165	5103	7	128.894326			
100000165	5103	8	138.929336			
100000165	5103	9	135.406301			
100000165	5103	10	138.351877			
100000166	3343	1	0	I-26 EXIT 102 EBL OFF RAMP	E	LAKE MURRAY BLVD & I-26 EXIT 102 EBL OFF RAMP
100000166	3343	2	0			
100000166	3343	3	0			
100000166	3343	4	0			
100000166	3343	5	0			
100000166	3343	6	0			
100000166	3343	7	0			
100000166	3343	8	0			
100000166	3343	9	0			
100000166	3343	10	0			
100000166	5087	1	0	LAKE MURRAY BLVD	E	LAKE MURRAY BLVD & I-26 EXIT 102 EBL OFF RAMP
100000166	5087	2	0			
100000166	5087	3	0			
100000166	5087	4	0			
100000166	5087	5	0			
100000166	5087	6	0			
100000166	5087	7	0			
100000166	5087	8	0			
100000166	5087	9	0			
100000166	5087	10	0			
100000166	5088	1	0	LAKE MURRAY BLVD	W	LAKE MURRAY BLVD & I-26 EXIT 102 EBL OFF RAMP
100000166	5088	2	0			
100000166	5088	3	0			
100000166	5088	4	0			
100000166	5088	5	0			
100000166	5088	6	0			
100000166	5088	7	0			
100000166	5088	8	0			
100000166	5088	9	0			
100000166	5088	10	0			
100000167	3339	1	0	I-26 EXIT 102 WBL OFF RAMP	W	I-26 EXIT 102 WBL OFF RAMP & LAKE MURRAY BLVD
100000167	3339	2	0			
100000167	3339	3	0			
100000167	3339	4	0			
100000167	3339	5	0			
100000167	3339	6	0			
100000167	3339	7	0			
100000167	3339	8	0			
100000167	3339	9	0			
100000167	3339	10	0			
100000167	5088	1	0	LAKE MURRAY BLVD	E	I-26 EXIT 102 WBL OFF RAMP & LAKE MURRAY BLVD
100000167	5088	2	0			
100000167	5088	3	0			
100000167	5088	4	0			
100000167	5088	5	0			
100000167	5088	6	0			
100000167	5088	7	0			
100000167	5088	8	0			
100000167	5088	9	0			
100000167	5088	10	0			
100000167	5090	1	0	LAKE MURRAY BLVD	W	I-26 EXIT 102 WBL OFF RAMP & LAKE MURRAY BLVD
100000167	5090	2	0			
100000167	5090	3	0			
100000167	5090	4	0			
100000167	5090	5	0			
100000167	5090	6	0			
100000167	5090	7	0			
100000167	5090	8	0			
100000167	5090	9	0			
100000167	5090	10	0			
100000168	5366	1	31.107144	LEAPHART RD	N	SUNSET BLVD & LEAPHART RD
100000168	5366	2	32.296581			
100000168	5366	3	32.272365			
100000168	5366	4	29.999649			
100000168	5366	5	33.149003			
100000168	5366	6	27.389289			
100000168	5366	7	27.591062			
100000168	5366	8	33.941402			
100000168	5366	9	30.581527			
100000168	5366	10	30.345255			
100000168	5368	1	5.78072	SUNSET BLVD	E	SUNSET BLVD & LEAPHART RD
100000168	5368	2	6.102981			
100000168	5368	3	5.195671			
100000168	5368	4	5.43089			
100000168	5368	5	6.023574			
100000168	5368	6	5.392985			
100000168	5368	7	4.916041			
100000168	5368	8	5.761006			
100000168	5368	9	5.409502			
100000168	5368	10	5.664269			
100000168	5372	1	593.503155	SUNSET BLVD	W	SUNSET BLVD & LEAPHART RD
100000168	5372	2	475.980294			
100000168	5372	3	508.951063			
100000168	5372	4	509.415908			
100000168	5372	5	530.604813			
100000168	5372	6	488.073714			
100000168	5372	7	462.655207			
100000168	5372	8	452.115548			
100000168	5372	9	427.127131			
100000168	5372	10	511.571785			
100000171	3342	1	0	I-26 EXIT 102 WB OFF RAMP	E	LAKE MURRAY BLVD & I-26 EXIT 102 WB OFF RAMP
100000171	3342	2	0			
100000171	3342	3	0			
100000171	3342	4	0			
100000171	3342	5	0			
100000171	3342	6	0			
100000171	3342	7	0			
100000171	3342	8	0			
100000171	3342	9	0			
100000171	3342	10	0			
100000171	5092	1	0.015187	LAKE MURRAY BLVD	E	LAKE MURRAY BLVD & I-26 EXIT 102 WB OFF RAMP
100000171	5092	2	0.016623			
100000171	5092	3	0.008034			

Node	Superlink	Run	Average Control Delay	Approach Street Name	Direction	Intersection
100000171	5092	4	0.022851			
100000171	5092	5	0.011925			
100000171	5092	6	0.019931			
100000171	5092	7	0.008012			
100000171	5092	8	0.009559			
100000171	5092	9	0.006607			
100000171	5092	10	0.009586			
100000171	5093	1	0	LAKE MURRAY BLVD	W	LAKE MURRAY BLVD & I-26 EXIT 102 WB OFF RAMP
100000171	5093	2	0			
100000171	5093	3	0			
100000171	5093	4	0			
100000171	5093	5	0			
100000171	5093	6	0			
100000171	5093	7	0			
100000171	5093	8	0			
100000171	5093	9	0			
100000171	5093	10	0			
100000173	3212	1	61.600879		103 SE	HARBISON BLVD
100000173	3212	2	55.47582			
100000173	3212	3	54.417114			
100000173	3212	4	53.895589			
100000173	3212	5	53.939488			
100000173	3212	6	50.398573			
100000173	3212	7	57.31914			
100000173	3212	8	57.783827			
100000173	3212	9	58.022647			
100000173	3212	10	54.636738			
100000173	3213	1	15.940295		103 S	HARBISON BLVD
100000173	3213	2	14.919945			
100000173	3213	3	15.11866			
100000173	3213	4	16.126826			
100000173	3213	5	16.897786			
100000173	3213	6	14.536767			
100000173	3213	7	15.412426			
100000173	3213	8	14.374948			
100000173	3213	9	14.990735			
100000173	3213	10	15.11617			
100000173	5097	1	3.409971	HARBISON BLVD	NE	HARBISON BLVD
100000173	5097	2	4.159551			
100000173	5097	3	3.841609			
100000173	5097	4	3.473378			
100000173	5097	5	3.96894			
100000173	5097	6	4.504542			
100000173	5097	7	3.297829			
100000173	5097	8	3.552959			
100000173	5097	9	3.612429			
100000173	5097	10	4.150342			
100000173	5099	1	7.459554	HARBISON BLVD	SW	HARBISON BLVD
100000173	5099	2	7.854438			
100000173	5099	3	9.002403			
100000173	5099	4	7.52642			
100000173	5099	5	7.375155			
100000173	5099	6	8.178152			
100000173	5099	7	7.629216			
100000173	5099	8	7.752714			
100000173	5099	9	7.844624			
100000173	5099	10	7.644667			
100000175	3234	1	54.768921	RAMP	SE	PINEY GROVE RD & RAMP
100000175	3234	2	60.377164			
100000175	3234	3	56.464781			
100000175	3234	4	50.862671			
100000175	3234	5	53.465521			
100000175	3234	6	53.714594			
100000175	3234	7	51.341351			
100000175	3234	8	52.864478			
100000175	3234	9	60.10689			
100000175	3234	10	55.556687			
100000175	5112	1	3.748279	PINEY GROVE RD	W	PINEY GROVE RD & RAMP
100000175	5112	2	6.059605			
100000175	5112	3	2.821939			
100000175	5112	4	2.529787			
100000175	5112	5	6.332714			
100000175	5112	6	4.692899			
100000175	5112	7	7.62282			
100000175	5112	8	9.894442			
100000175	5112	9	1.555988			
100000175	5112	10	5.226474			
100000175	6544	1	4.301656	PINEY GROVE RD	E	PINEY GROVE RD & RAMP
100000175	6544	2	3.820565			
100000175	6544	3	3.362363			
100000175	6544	4	3.437879			
100000175	6544	5	4.246608			
100000175	6544	6	3.132606			
100000175	6544	7	4.120715			
100000175	6544	8	4.139583			
100000175	6544	9	3.85463			
100000175	6544	10	3.808955			
100000177	5112	1	10.589721	PINEY GROVE RD	E	PINEY GROVE RD
100000177	5112	2	13.024896			
100000177	5112	3	19.979403			
100000177	5112	4	12.506994			
100000177	5112	5	12.960875			
100000177	5112	6	12.348138			
100000177	5112	7	18.316686			
100000177	5112	8	18.688714			
100000177	5112	9	8.904021			
100000177	5112	10	13.972495			
100000177	5113	1	15.163817	PINEY GROVE RD	W	PINEY GROVE RD
100000177	5113	2	14.327482			
100000177	5113	3	14.571901			
100000177	5113	4	13.413931			
100000177	5113	5	16.660918			
100000177	5113	6	13.342079			
100000177	5113	7	14.042516			
100000177	5113	8	15.613125			
100000177	5113	9	11.216087			
100000177	5113	10	14.527499			
100000177	6513	1	5.867458	EXIT 104 WB OFF RAMP	N	PINEY GROVE RD
100000177	6513	2	6.258643			
100000177	6513	3	5.902066			

Node	Superlink	Run	Average Control Delay	Approach Street Name	Direction	Intersection
100000177	6513	4	5.869596			
100000177	6513	5	6.215658			
100000177	6513	6	6.265471			
100000177	6513	7	5.831487			
100000177	6513	8	6.011719			
100000177	6513	9	5.891329			
100000177	6513	10	5.963813			
100000177	6514	1	26.286825	EXIT 104 WB OFF RAMP	N	PINEY GROVE RD
100000177	6514	2	27.662844			
100000177	6514	3	27.562636			
100000177	6514	4	28.222463			
100000177	6514	5	29.015048			
100000177	6514	6	30.0693			
100000177	6514	7	27.50622			
100000177	6514	8	28.785927			
100000177	6514	9	29.686457			
100000177	6514	10	27.364026			
100000178	3301	1	26.190911	RAMP	SE	ST ANDREWS RD
100000178	3301	2	26.176049			
100000178	3301	3	25.776831			
100000178	3301	4	24.485134			
100000178	3301	5	25.025951			
100000178	3301	6	22.545843			
100000178	3301	7	25.39608			
100000178	3301	8	25.223609			
100000178	3301	9	26.261532			
100000178	3301	10	23.081786			
100000178	5118	1	5.80514	ST ANDREWS RD	E	ST ANDREWS RD
100000178	5118	2	5.823545			
100000178	5118	3	5.668722			
100000178	5118	4	5.667539			
100000178	5118	5	5.648911			
100000178	5118	6	6.017629			
100000178	5118	7	5.535969			
100000178	5118	8	5.741677			
100000178	5118	9	5.589174			
100000178	5118	10	5.733134			
100000178	5119	1	25.578769	WOODLAND HILLS RD	N	ST ANDREWS RD
100000178	5119	2	22.923442			
100000178	5119	3	22.579956			
100000178	5119	4	21.764028			
100000178	5119	5	21.632775			
100000178	5119	6	23.328807			
100000178	5119	7	20.251248			
100000178	5119	8	23.146476			
100000178	5119	9	21.449266			
100000178	5119	10	25.320801			
100000178	5120	1	9.357841	ST ANDREWS RD	W	ST ANDREWS RD
100000178	5120	2	9.303083			
100000178	5120	3	8.464862			
100000178	5120	4	9.469734			
100000178	5120	5	9.065198			
100000178	5120	6	9.315592			
100000178	5120	7	9.574968			
100000178	5120	8	9.273855			
100000178	5120	9	9.938169			
100000178	5120	10	9.992862			
100000179	3219	1	0	RAMP	S	ST ANDREWS RD & RAMP
100000179	3219	2	0			
100000179	3219	3	0			
100000179	3219	4	0			
100000179	3219	5	0			
100000179	3219	6	0			
100000179	3219	7	0			
100000179	3219	8	0			
100000179	3219	9	0			
100000179	3219	10	0			
100000179	5116	1	17.564903	ST ANDREWS RD	E	ST ANDREWS RD & RAMP
100000179	5116	2	14.889135			
100000179	5116	3	15.363992			
100000179	5116	4	15.429448			
100000179	5116	5	17.319032			
100000179	5116	6	13.035261			
100000179	5116	7	15.914545			
100000179	5116	8	14.864132			
100000179	5116	9	17.222494			
100000179	5116	10	16.490913			
100000179	5118	1	0	ST ANDREWS RD	W	ST ANDREWS RD & RAMP
100000179	5118	2	0			
100000179	5118	3	0			
100000179	5118	4	0			
100000179	5118	5	0			
100000179	5118	6	0			
100000179	5118	7	0			
100000179	5118	8	0			
100000179	5118	9	0			
100000179	5118	10	0			
100000182	3292	1	0	EXIT 106 WB OFF RAMP	NE	ST ANDREWS RD
100000182	3292	2	0			
100000182	3292	3	0			
100000182	3292	4	0			
100000182	3292	5	0			
100000182	3292	6	0			
100000182	3292	7	0			
100000182	3292	8	0			
100000182	3292	9	0			
100000182	3292	10	0			
100000182	5123	1	0	ST ANDREWS RD	E	ST ANDREWS RD
100000182	5123	2	0			
100000182	5123	3	0			
100000182	5123	4	0			
100000182	5123	5	0			
100000182	5123	6	0			
100000182	5123	7	0			
100000182	5123	8	0			
100000182	5123	9	0			
100000182	5123	10	0			
100000182	5124	1	0	ST ANDREWS RD	SW	ST ANDREWS RD
100000182	5124	2	0			
100000182	5124	3	0			

Node	Superlink	Run	Average Control Delay	Approach Street Name	Direction	Intersection
100000182	5124	4	0			
100000182	5124	5	0			
100000182	5124	6	0			
100000182	5124	7	0			
100000182	5124	8	0			
100000182	5124	9	0			
100000182	5124	10	0			
100000184	5499	1	18.39937	N ARROWWOOD RD	S	ARROWWOOD RD
100000184	5499	2	17.154234			
100000184	5499	3	17.378786			
100000184	5499	4	16.770017			
100000184	5499	5	16.277268			
100000184	5499	6	21.724715			
100000184	5499	7	19.082368			
100000184	5499	8	19.300962			
100000184	5499	9	21.359881			
100000184	5499	10	19.735807			
100000184	5500	1	56.603645	ARROWWOOD RD	N	ARROWWOOD RD
100000184	5500	2	48.363767			
100000184	5500	3	54.01798			
100000184	5500	4	46.867687			
100000184	5500	5	45.536123			
100000184	5500	6	43.850509			
100000184	5500	7	48.943319			
100000184	5500	8	51.153916			
100000184	5500	9	62.913386			
100000184	5500	10	38.416234			
100000184	6497	1	164.975389	BUSH RIVER RD	W	ARROWWOOD RD
100000184	6497	2	131.772148			
100000184	6497	3	114.501715			
100000184	6497	4	130.422401			
100000184	6497	5	148.666223			
100000184	6497	6	179.309557			
100000184	6497	7	141.733159			
100000184	6497	8	147.05732			
100000184	6497	9	124.935274			
100000184	6497	10	123.853332			
100000184	6505	1	15.757976	BUSH RIVER RD	E	ARROWWOOD RD
100000184	6505	2	16.628435			
100000184	6505	3	17.760479			
100000184	6505	4	16.775284			
100000184	6505	5	18.22122			
100000184	6505	6	14.798273			
100000184	6505	7	21.214314			
100000184	6505	8	18.434556			
100000184	6505	9	15.927857			
100000184	6505	10	18.202989			
100000185	3230	1	79.258557	RAMP	W	GREYSTONE BLVD
100000185	3230	2	74.572647			
100000185	3230	3	69.248838			
100000185	3230	4	56.438754			
100000185	3230	5	79.861808			
100000185	3230	6	59.95309			
100000185	3230	7	93.395361			
100000185	3230	8	101.097289			
100000185	3230	9	51.669857			
100000185	3230	10	72.254251			
100000185	5140	1	0.463252	GREYSTONE BLVD	N	GREYSTONE BLVD
100000185	5140	2	0.532599			
100000185	5140	3	0.510293			
100000185	5140	4	0.535972			
100000185	5140	5	0.794661			
100000185	5140	6	0.355945			
100000185	5140	7	0.494782			
100000185	5140	8	0.487937			
100000185	5140	9	0.299559			
100000185	5140	10	0.423474			
100000185	5141	1	5.39673	GREYSTONE BLVD	S	GREYSTONE BLVD
100000185	5141	2	4.675411			
100000185	5141	3	5.354241			
100000185	5141	4	5.290821			
100000185	5141	5	6.122561			
100000185	5141	6	4.27121			
100000185	5141	7	4.533549			
100000185	5141	8	7.411892			
100000185	5141	9	4.17006			
100000185	5141	10	6.479215			
100000186	4949	1	34.903594	SUNSET BLVD	W	HARBOR DR
100000186	4949	2	34.366997			
100000186	4949	3	29.016303			
100000186	4949	4	35.527351			
100000186	4949	5	33.143623			
100000186	4949	6	28.183501			
100000186	4949	7	28.882501			
100000186	4949	8	35.698673			
100000186	4949	9	26.575767			
100000186	4949	10	32.359322			
100000186	5386	1	935.751426	HARBOR DR	N	HARBOR DR
100000186	5386	2	1011.238098			
100000186	5386	3	816.985235			
100000186	5386	4	622.191794			
100000186	5386	5	928.05481			
100000186	5386	6	995.285441			
100000186	5386	7	379.87763			
100000186	5386	8	942.48205			
100000186	5386	9	751.305209			
100000186	5386	10	855.406901			
100000186	5387	1	237.252317	E HOSPITAL DR	S	HARBOR DR
100000186	5387	2	292.99678			
100000186	5387	3	307.821944			
100000186	5387	4	274.292332			
100000186	5387	5	286.111962			
100000186	5387	6	274.322506			
100000186	5387	7	161.7907			
100000186	5387	8	367.127818			
100000186	5387	9	309.084321			
100000186	5387	10	290.055772			
100000186	6762	1	60.787106	SUNSET BLVD	E	HARBOR DR
100000186	6762	2	49.950387			
100000186	6762	3	55.590054			

Node	Superlink	Run	Average Control Delay	Approach Street Name	Direction	Intersection
100000186	6762	4	63.395904			
100000186	6762	5	44.17784			
100000186	6762	6	81.734678			
100000186	6762	7	44.699477			
100000186	6762	8	47.927272			
100000186	6762	9	53.475457			
100000186	6762	10	49.733596			
100000187	6057	1	214.880039	BROAD RIVER RD	NW	BROAD RIVER RD
100000187	6057	2	185.099979			
100000187	6057	3	159.454097			
100000187	6057	4	187.163636			
100000187	6057	5	150.907065			
100000187	6057	6	209.356123			
100000187	6057	7	140.455459			
100000187	6057	8	160.251716			
100000187	6057	9	220.738123			
100000187	6057	10	170.811752			
100000187	6059	1	13.713563	BROAD RIVER RD	SE	BROAD RIVER RD
100000187	6059	2	22.197392			
100000187	6059	3	8.054405			
100000187	6059	4	23.214335			
100000187	6059	5	28.532436			
100000187	6059	6	21.566659			
100000187	6059	7	42.050094			
100000187	6059	8	26.573942			
100000187	6059	9	4.785718			
100000187	6059	10	14.988131			
100000187	6060	1	256.2549	MARLEY DR	SW	BROAD RIVER RD
100000187	6060	2	316.455222			
100000187	6060	3	63.679708			
100000187	6060	4	430.759681			
100000187	6060	5	122.373445			
100000187	6060	6	91.295344			
100000187	6060	7	333.957261			
100000187	6060	8	145.162981			
100000187	6060	9	56.093419			
100000187	6060	10	68.197121			
100000187	6061	1	432.367478	BRIARGATE CIR	NE	BROAD RIVER RD
100000187	6061	2	306.771095			
100000187	6061	3	48.718382			
100000187	6061	4	337.783985			
100000187	6061	5	81.35955			
100000187	6061	6	318.878749			
100000187	6061	7	69.616467			
100000187	6061	8	79.760882			
100000187	6061	9	667.111353			
100000187	6061	10	72.036348			
100000188	3221	1	46.786265	RAMP	W	GREYSTONE BLVD & RAMP
100000188	3221	2	19.807864			
100000188	3221	3	37.140052			
100000188	3221	4	32.145246			
100000188	3221	5	42.697841			
100000188	3221	6	18.568915			
100000188	3221	7	16.562147			
100000188	3221	8	36.484897			
100000188	3221	9	26.889253			
100000188	3221	10	25.20579			
100000188	5143	1	2.45606	GREYSTONE BLVD	N	GREYSTONE BLVD & RAMP
100000188	5143	2	3.704555			
100000188	5143	3	2.200037			
100000188	5143	4	3.543311			
100000188	5143	5	2.2464			
100000188	5143	6	2.241169			
100000188	5143	7	8.679943			
100000188	5143	8	4.689167			
100000188	5143	9	3.530925			
100000188	5143	10	2.487852			
100000188	5144	1	0.073891	GREYSTONE BLVD	S	GREYSTONE BLVD & RAMP
100000188	5144	2	0.068819			
100000188	5144	3	0.036425			
100000188	5144	4	0.064435			
100000188	5144	5	0.010422			
100000188	5144	6	0.03929			
100000188	5144	7	0.094809			
100000188	5144	8	0.085101			
100000188	5144	9	0.049246			
100000188	5144	10	0.077962			
100000189	4346	1	765.569581	I-20 EXIT 65 WB OFF RAMP	SW	I-20 EXIT 65 WB OFF RAMP
100000189	4346	2	583.753352			
100000189	4346	3	709.075887			
100000189	4346	4	668.141169			
100000189	4346	5	651.930783			
100000189	4346	6	768.11322			
100000189	4346	7	582.206403			
100000189	4346	8	571.405384			
100000189	4346	9	775.267415			
100000189	4346	10	626.924216			
100000189	6057	1	84.56343	BROAD RIVER RD	SE	I-20 EXIT 65 WB OFF RAMP
100000189	6057	2	73.967694			
100000189	6057	3	74.055309			
100000189	6057	4	91.729458			
100000189	6057	5	95.384098			
100000189	6057	6	72.409376			
100000189	6057	7	111.351432			
100000189	6057	8	82.264038			
100000189	6057	9	21.986772			
100000189	6057	10	73.327362			
100000189	6447	1	165.845155	BROAD RIVER RD	NW	I-20 EXIT 65 WB OFF RAMP
100000189	6447	2	101.208127			
100000189	6447	3	94.534371			
100000189	6447	4	118.661173			
100000189	6447	5	83.762871			
100000189	6447	6	115.869715			
100000189	6447	7	71.243553			
100000189	6447	8	92.100449			
100000189	6447	9	170.397438			
100000189	6447	10	98.696299			
100000190	4341	1	403.29408	I-20 EXIT 65 EB OFF RAMP	E	BROAD RIVER RD
100000190	4341	2	213.669208			
100000190	4341	3	249.125907			

Node	Superlink	Run	Average Control Delay	Approach Street Name	Direction	Intersection
100000190	4341	4	239.642334			
100000190	4341	5	171.827948			
100000190	4341	6	320.195102			
100000190	4341	7	73.824417			
100000190	4341	8	291.994516			
100000190	4341	9	914.847548			
100000190	4341	10	118.540787			
100000190	5148	1	1.9879	BROAD RIVER RD	SE	BROAD RIVER RD
100000190	5148	2	1.554072			
100000190	5148	3	1.934897			
100000190	5148	4	1.794709			
100000190	5148	5	1.998179			
100000190	5148	6	1.786924			
100000190	5148	7	1.842467			
100000190	5148	8	1.830929			
100000190	5148	9	1.685738			
100000190	5148	10	1.809625			
100000190	6445	1	15.511608	BROAD RIVER RD	NW	BROAD RIVER RD
100000190	6445	2	9.724821			
100000190	6445	3	8.685213			
100000190	6445	4	11.70775			
100000190	6445	5	7.888641			
100000190	6445	6	10.605524			
100000190	6445	7	7.15842			
100000190	6445	8	8.426102			
100000190	6445	9	15.485997			
100000190	6445	10	8.935988			
100000190	6446	1		SERVICE RD	SW	BROAD RIVER RD
100000190	6446	2				
100000190	6446	3				
100000190	6446	4				
100000190	6446	5				
100000190	6446	6				
100000190	6446	7				
100000190	6446	8				
100000190	6446	9				
100000190	6446	10				
100000191	5399	1	0.039194	HARBOR DR	S	HARBOR DR & OAKWOOD DR
100000191	5399	2	0.263717			
100000191	5399	3	0			
100000191	5399	4	0.068489			
100000191	5399	5	0			
100000191	5399	6	0.161753			
100000191	5399	7	1.064072			
100000191	5399	8	0.059285			
100000191	5399	9	0			
100000191	5399	10	0.115883			
100000191	5414	1	312.692294	OAKWOOD DR	NE	HARBOR DR & OAKWOOD DR
100000191	5414	2	156.640941			
100000191	5414	3	390.309448			
100000191	5414	4	249.682913			
100000191	5414	5	183.747221			
100000191	5414	6	304.216377			
100000191	5414	7	101.270008			
100000191	5414	8	620.485089			
100000191	5414	9	177.303813			
100000191	5414	10	199.634692			
100000191	5420	1	459.602509	HARBOR DR	N	HARBOR DR & OAKWOOD DR
100000191	5420	2	176.435866			
100000191	5420	3	473.27978			
100000191	5420	4	273.509516			
100000191	5420	5	73.912492			
100000191	5420	6	399.666412			
100000191	5420	7	73.856964			
100000191	5420	8	731.318298			
100000191	5420	9	262.212502			
100000191	5420	10	538.604362			
100000193	4350	1	36.423018	I-20 EXIT 68 EB OFF RAMP	E	BUCKNER RD
100000193	4350	2	29.275479			
100000193	4350	3	26.992496			
100000193	4350	4	25.380573			
100000193	4350	5	25.895305			
100000193	4350	6	29.25673			
100000193	4350	7	23.761972			
100000193	4350	8	26.101658			
100000193	4350	9	78.091045			
100000193	4350	10	28.389715			
100000193	5154	1	21.495595	MONTICELLO RD	N	BUCKNER RD
100000193	5154	2	20.667771			
100000193	5154	3	18.344333			
100000193	5154	4	19.312026			
100000193	5154	5	19.415182			
100000193	5154	6	19.699628			
100000193	5154	7	19.03994			
100000193	5154	8	18.214232			
100000193	5154	9	20.034871			
100000193	5154	10	20.197188			
100000193	5155	1	26.962344	MONTICELLO RD	SE	BUCKNER RD
100000193	5155	2	39.199612			
100000193	5155	3	21.70605			
100000193	5155	4	27.087122			
100000193	5155	5	21.10791			
100000193	5155	6	22.877197			
100000193	5155	7	21.40673			
100000193	5155	8	19.796471			
100000193	5155	9	23.484046			
100000193	5155	10	27.084284			
100000193	5163	1	11.628614	BUCKNER RD	SW	BUCKNER RD
100000193	5163	2	12.631686			
100000193	5163	3	10.315716			
100000193	5163	4	11.944996			
100000193	5163	5	11.079828			
100000193	5163	6	12.790268			
100000193	5163	7	10.2781			
100000193	5163	8	11.706468			
100000193	5163	9	10.623104			
100000193	5163	10	10.372239			
100000195	5150	1	7.874909	BROAD RIVER RD	SE	LONGCREEK DR & BROAD RIVER RD
100000195	5150	2	9.700599			
100000195	5150	3	9.259983			

Node	Superlink	Run	Average Control Delay	Approach Street Name	Direction	Intersection
100000195	5150	4	8.202587			
100000195	5150	5	7.938278			
100000195	5150	6	8.990084			
100000195	5150	7	9.186988			
100000195	5150	8	9.760864			
100000195	5150	9	9.353981			
100000195	5150	10	8.75601			
100000195	6049	1	12.188583	BROAD RIVER RD	NW	LONGCREEK DR & BROAD RIVER RD
100000195	6049	2	7.237024			
100000195	6049	3	6.945747			
100000195	6049	4	8.559851			
100000195	6049	5	5.189868			
100000195	6049	6	7.875546			
100000195	6049	7	5.231661			
100000195	6049	8	6.433105			
100000195	6049	9	11.635305			
100000195	6049	10	7.150817			
100000195	6052	1	101.748779	LONGCREEK DR	SW	LONGCREEK DR & BROAD RIVER RD
100000195	6052	2	86.520338			
100000195	6052	3	81.94004			
100000195	6052	4	105.514812			
100000195	6052	5	86.019804			
100000195	6052	6	90.716519			
100000195	6052	7	71.985464			
100000195	6052	8	80.191377			
100000195	6052	9	132.185923			
100000195	6052	10	81.00265			
100000196	5166	1	1.166477	MONTICELLO RD	SE	SERVICE RD
100000196	5166	2	0.738353			
100000196	5166	3	1.281243			
100000196	5166	4	0.881717			
100000196	5166	5	0.957981			
100000196	5166	6	1.380516			
100000196	5166	7	1.406942			
100000196	5166	8	0.722742			
100000196	5166	9	0.984418			
100000196	5166	10	1.253342			
100000196	5169	1	11.474449	SERVICE RD	SW	SERVICE RD
100000196	5169	2	14.921877			
100000196	5169	3	16.863027			
100000196	5169	4	17.647685			
100000196	5169	5	14.149676			
100000196	5169	6	18.145249			
100000196	5169	7	12.876175			
100000196	5169	8	15.923798			
100000196	5169	9	14.2964			
100000196	5169	10	10.991647			
100000196	5172	1	1.208418	MONTICELLO RD	NW	SERVICE RD
100000196	5172	2	1.367584			
100000196	5172	3	1.035289			
100000196	5172	4	2.446671			
100000196	5172	5	2.061676			
100000196	5172	6	1.484417			
100000196	5172	7	2.108201			
100000196	5172	8	1.209301			
100000196	5172	9	1.765375			
100000196	5172	10	1.558794			
100000198	4354	1	0	RAMP	N	RAMP & I-20 EXIT 68 EB ON RAMP
100000198	4354	2	0			
100000198	4354	3	0			
100000198	4354	4	0			
100000198	4354	5	0			
100000198	4354	6	0			
100000198	4354	7	0			
100000198	4354	8	0			
100000198	4354	9	0			
100000198	4354	10	0			
100000198	5158	1		RAMP	NW	RAMP & I-20 EXIT 68 EB ON RAMP
100000198	5158	2				
100000198	5158	3				
100000198	5158	4				
100000198	5158	5				
100000198	5158	6				
100000198	5158	7				
100000198	5158	8				
100000198	5158	9				
100000198	5158	10				
100000200	5174	1	7.654177	MONTICELLO RD	NW	MONTICELLO RD
100000200	5174	2	7.494289			
100000200	5174	3	7.592044			
100000200	5174	4	9.318478			
100000200	5174	5	8.733484			
100000200	5174	6	7.731369			
100000200	5174	7	7.082506			
100000200	5174	8	7.748559			
100000200	5174	9	7.218162			
100000200	5174	10	7.313444			
100000200	6041	1	9.960327	MONTICELLO RD	SE	MONTICELLO RD
100000200	6041	2	6.868055			
100000200	6041	3	5.424744			
100000200	6041	4	10.402112			
100000200	6041	5	5.87177			
100000200	6041	6	11.392708			
100000200	6041	7	6.066334			
100000200	6041	8	6.214853			
100000200	6041	9	21.508419			
100000200	6041	10	7.331517			
100000200	6044	1	21.241327	PEEPLES ST	NE	MONTICELLO RD
100000200	6044	2	15.995889			
100000200	6044	3	13.438358			
100000200	6044	4	17.023891			
100000200	6044	5	14.03668			
100000200	6044	6	16.252721			
100000200	6044	7	12.275456			
100000200	6044	8	14.262017			
100000200	6044	9	21.789194			
100000200	6044	10	16.55647			
100000200	6046	1	23.744278	BLUE RIDGE TER	S	MONTICELLO RD
100000200	6046	2	25.55661			
100000200	6046	3	24.798008			

Node	Superlink	Run	Average Control Delay	Approach Street Name	Direction	Intersection
100000200	6046	4	23.913519			
100000200	6046	5	26.484959			
100000200	6046	6	26.812387			
100000200	6046	7	22.224171			
100000200	6046	8	26.574647			
100000200	6046	9	22.386396			
100000200	6046	10	24.807982			
100000201	5157	1	3.126104	BUCKNER RD	SW	BUCKNER RD & TO BUCKNER ROAD
100000201	5157	2	4.344594			
100000201	5157	3	2.550029			
100000201	5157	4	4.055004			
100000201	5157	5	3.07029			
100000201	5157	6	3.171145			
100000201	5157	7	3.982635			
100000201	5157	8	4.876394			
100000201	5157	9	3.683081			
100000201	5157	10	2.270283			
100000201	5161	1	0.078834	TO BUCKNER ROAD	N	BUCKNER RD & TO BUCKNER ROAD
100000201	5161	2	0.004411			
100000201	5161	3	0.396702			
100000201	5161	4	0.33494			
100000201	5161	5	0.040631			
100000201	5161	6	0.304542			
100000201	5161	7	0.580128			
100000201	5161	8	0.339532			
100000201	5161	9	1.130257			
100000201	5161	10	0.01169			
100000201	5163	1	0.005123	BUCKNER RD	NE	BUCKNER RD & TO BUCKNER ROAD
100000201	5163	2	0.004979			
100000201	5163	3	0.004696			
100000201	5163	4	0.00419			
100000201	5163	5	0.004788			
100000201	5163	6	0.005123			
100000201	5163	7	0.007376			
100000201	5163	8	0.006418			
100000201	5163	9	0.003737			
100000201	5163	10	0.00364			
100000203	5169	1		SERVICE RD	E	SERVICE RD & MONTICELLO RD
100000203	5169	2				
100000203	5169	3				
100000203	5169	4				
100000203	5169	5				
100000203	5169	6				
100000203	5169	7				
100000203	5169	8				
100000203	5169	9				
100000203	5169	10				
100000203	5171	1		MONTICELLO RD	N	SERVICE RD & MONTICELLO RD
100000203	5171	2				
100000203	5171	3				
100000203	5171	4				
100000203	5171	5				
100000203	5171	6				
100000203	5171	7				
100000203	5171	8				
100000203	5171	9				
100000203	5171	10				
100000203	5173	1	0.185257	SERVICE RD	W	SERVICE RD & MONTICELLO RD
100000203	5173	2	0.168435			
100000203	5173	3	0.432946			
100000203	5173	4	0.196495			
100000203	5173	5	0.208893			
100000203	5173	6	0.352159			
100000203	5173	7	0.622566			
100000203	5173	8	0.421544			
100000203	5173	9	0.247898			
100000203	5173	10	0.411268			
100000250	6539	1	3.733309	BUSH RIVER RD	NW	E MEADOW CT/WOODLAND VILLAGE DR
100000250	6539	2	5.651773			
100000250	6539	3	4.094399			
100000250	6539	4	5.132548			
100000250	6539	5	4.793563			
100000250	6539	6	5.38242			
100000250	6539	7	4.075698			
100000250	6539	8	4.530482			
100000250	6539	9	4.758665			
100000250	6539	10	4.795095			
100000250	6546	1	28.521705	OUTLET POINTE BLVD	NE	E MEADOW CT/WOODLAND VILLAGE DR
100000250	6546	2	39.035941			
100000250	6546	3	31.556798			
100000250	6546	4	33.858978			
100000250	6546	5	45.686238			
100000250	6546	6	36.134584			
100000250	6546	7	28.259507			
100000250	6546	8	39.505806			
100000250	6546	9	44.104343			
100000250	6546	10	44.369173			
100000250	6547	1	35.033567	E MEADOW CT/WOODLAND VILLAGE DR	SW	E MEADOW CT/WOODLAND VILLAGE DR
100000250	6547	2	46.721826			
100000250	6547	3	34.884138			
100000250	6547	4	39.00478			
100000250	6547	5	51.168426			
100000250	6547	6	41.942844			
100000250	6547	7	33.160012			
100000250	6547	8	33.930418			
100000250	6547	9	41.104739			
100000250	6547	10	52.581375			
100000250	6548	1	17.643315	BUSH RIVER RD	SE	E MEADOW CT/WOODLAND VILLAGE DR
100000250	6548	2	54.427114			
100000250	6548	3	25.90334			
100000250	6548	4	33.132152			
100000250	6548	5	65.268719			
100000250	6548	6	31.032524			
100000250	6548	7	21.783436			
100000250	6548	8	61.7642			
100000250	6548	9	38.85469			
100000250	6548	10	73.935747			
100000252	5125	1	15.215924	BUSH RIVER RD	E	MORNINGHILL DR
100000252	5125	2	13.217709			
100000252	5125	3	15.529913			

Node	Superlink	Run	Average Control Delay	Approach Street Name	Direction	Intersection
100000252	5125	4	15.949729			
100000252	5125	5	14.321656			
100000252	5125	6	14.541517			
100000252	5125	7	14.51895			
100000252	5125	8	15.111726			
100000252	5125	9	12.917833			
100000252	5125	10	14.445024			
100000252	5487	1	116.774892	MORNINGHILL DR	S	MORNINGHILL DR
100000252	5487	2	102.258944			
100000252	5487	3	119.264529			
100000252	5487	4	87.578313			
100000252	5487	5	117.167078			
100000252	5487	6	98.759081			
100000252	5487	7	119.522603			
100000252	5487	8	123.843699			
100000252	5487	9	151.316222			
100000252	5487	10	109.564998			
100000252	5488	1	18.62307	RAMP	N	MORNINGHILL DR
100000252	5488	2	16.233308			
100000252	5488	3	17.982285			
100000252	5488	4	17.565027			
100000252	5488	5	17.398698			
100000252	5488	6	17.834122			
100000252	5488	7	16.733743			
100000252	5488	8	17.85032			
100000252	5488	9	16.727705			
100000252	5488	10	17.478017			
100000252	6505	1	122.274419	BUSH RIVER RD	W	MORNINGHILL DR
100000252	6505	2	111.00554			
100000252	6505	3	108.715478			
100000252	6505	4	111.478443			
100000252	6505	5	116.832275			
100000252	6505	6	119.025834			
100000252	6505	7	115.58304			
100000252	6505	8	112.051536			
100000252	6505	9	96.342523			
100000252	6505	10	109.91399			
100000255	5038	1	0.362336	BUSH RIVER RD	E	BUSH RIVER RD & INDEPENDENCE AVE
100000255	5038	2	0.351055			
100000255	5038	3	0.214172			
100000255	5038	4	0.265122			
100000255	5038	5	0.323522			
100000255	5038	6	0.309227			
100000255	5038	7	0.219876			
100000255	5038	8	0.268762			
100000255	5038	9	0.53961			
100000255	5038	10	0.392724			
100000255	5470	1	46.174724	INDEPENDENCE AVE	N	BUSH RIVER RD & INDEPENDENCE AVE
100000255	5470	2	45.944898			
100000255	5470	3	53.185898			
100000255	5470	4	48.603226			
100000255	5470	5	39.263049			
100000255	5470	6	46.401599			
100000255	5470	7	43.227048			
100000255	5470	8	63.414266			
100000255	5470	9	54.025646			
100000255	5470	10	45.904006			
100000255	5471	1	8.522803	BUSH RIVER RD	W	BUSH RIVER RD & INDEPENDENCE AVE
100000255	5471	2	10.47206			
100000255	5471	3	10.035233			
100000255	5471	4	10.261626			
100000255	5471	5	9.316426			
100000255	5471	6	10.100409			
100000255	5471	7	7.220125			
100000255	5471	8	11.449857			
100000255	5471	9	11.775493			
100000255	5471	10	10.895112			
100000256	5131	1	1.733542	BUSH RIVER RD	W	BUSH RIVER RD & ZIMALCREST DR
100000256	5131	2	1.852551			
100000256	5131	3	2.150012			
100000256	5131	4	1.520935			
100000256	5131	5	2.024584			
100000256	5131	6	1.812472			
100000256	5131	7	2.252963			
100000256	5131	8	1.599301			
100000256	5131	9	1.888093			
100000256	5131	10	1.558512			
100000256	5465	1	6.809166	BUSH RIVER RD	E	BUSH RIVER RD & ZIMALCREST DR
100000256	5465	2	5.253013			
100000256	5465	3	6.072361			
100000256	5465	4	7.463893			
100000256	5465	5	6.799512			
100000256	5465	6	6.35431			
100000256	5465	7	6.749674			
100000256	5465	8	7.060795			
100000256	5465	9	6.742432			
100000256	5465	10	6.099618			
100000256	5484	1	62.150381	ZIMALCREST DR	S	BUSH RIVER RD & ZIMALCREST DR
100000256	5484	2	57.808639			
100000256	5484	3	51.03672			
100000256	5484	4	57.00807			
100000256	5484	5	50.610736			
100000256	5484	6	55.308168			
100000256	5484	7	52.889418			
100000256	5484	8	50.606122			
100000256	5484	9	52.519754			
100000256	5484	10	53.669599			
100000256	5485	1	12.159845	ZIMALCREST DR	N	BUSH RIVER RD & ZIMALCREST DR
100000256	5485	2	11.392932			
100000256	5485	3	11.971071			
100000256	5485	4	10.805538			
100000256	5485	5	12.523892			
100000256	5485	6	11.038829			
100000256	5485	7	11.456768			
100000256	5485	8	12.693916			
100000256	5485	9	10.751514			
100000256	5485	10	11.968615			
100000259	5465	1	0	BUSH RIVER RD	W	NOTTINGWOOD DR & BUSH RIVER RD
100000259	5465	2	0			
100000259	5465	3	0			

Node	Superlink	Run	Average Control Delay	Approach Street Name	Direction	Intersection
100000259	5465	4	0			
100000259	5465	5	0			
100000259	5465	6	0			
100000259	5465	7	0			
100000259	5465	8	0			
100000259	5465	9	0			
100000259	5465	10	0			
100000259	5471	1	0	BUSH RIVER RD	E	NOTTINGWOOD DR & BUSH RIVER RD
100000259	5471	2	0			
100000259	5471	3	0			
100000259	5471	4	0			
100000259	5471	5	0			
100000259	5471	6	0			
100000259	5471	7	0			
100000259	5471	8	0			
100000259	5471	9	0			
100000259	5471	10	0			
100000259	5472	1		NOTTINGWOOD DR	S	NOTTINGWOOD DR & BUSH RIVER RD
100000259	5472	2				
100000259	5472	3				
100000259	5472	4				
100000259	5472	5				
100000259	5472	6				
100000259	5472	7				
100000259	5472	8				
100000259	5472	9				
100000259	5472	10				
100000262	5502	1	11.265302	BUSH RIVER RD	E	DUTCH SQUARE ENTRANCE
100000262	5502	2	9.784562			
100000262	5502	3	11.099761			
100000262	5502	4	11.376686			
100000262	5502	5	11.032594			
100000262	5502	6	10.198737			
100000262	5502	7	10.441311			
100000262	5502	8	10.198472			
100000262	5502	9	9.21084			
100000262	5502	10	8.718713			
100000262	5506	1	19.351997	COLONIAL LIFE BLVD W	N	DUTCH SQUARE ENTRANCE
100000262	5506	2	15.988906			
100000262	5506	3	15.054143			
100000262	5506	4	17.638994			
100000262	5506	5	17.991254			
100000262	5506	6	17.632486			
100000262	5506	7	16.812			
100000262	5506	8	17.106693			
100000262	5506	9	16.590279			
100000262	5506	10	15.582676			
100000262	5509	1	66.208505	DUTCH SQUARE ENTRANCE	S	DUTCH SQUARE ENTRANCE
100000262	5509	2	62.467063			
100000262	5509	3	61.939413			
100000262	5509	4	66.879861			
100000262	5509	5	58.610931			
100000262	5509	6	57.154288			
100000262	5509	7	64.468765			
100000262	5509	8	61.97672			
100000262	5509	9	61.653343			
100000262	5509	10	58.717996			
100000262	5511	1	135.280848	BUSH RIVER RD	W	DUTCH SQUARE ENTRANCE
100000262	5511	2	110.957963			
100000262	5511	3	173.772013			
100000262	5511	4	156.681666			
100000262	5511	5	188.3159			
100000262	5511	6	327.796693			
100000262	5511	7	88.409889			
100000262	5511	8	264.697965			
100000262	5511	9	94.804601			
100000262	5511	10	130.812069			
100000263	5516	1	110.108934	COLONIAL LIFE BLVD W	N	COLONIAL LIFE BLVD W
100000263	5516	2	74.427869			
100000263	5516	3	44.015846			
100000263	5516	4	83.392979			
100000263	5516	5	102.360837			
100000263	5516	6	113.309579			
100000263	5516	7	95.696665			
100000263	5516	8	90.755525			
100000263	5516	9	61.598929			
100000263	5516	10	63.953251			
100000263	5520	1	296.367536	COLONIAL LIFE BLVD W	W	COLONIAL LIFE BLVD W
100000263	5520	2	242.906706			
100000263	5520	3	154.319552			
100000263	5520	4	152.916129			
100000263	5520	5	145.69076			
100000263	5520	6	530.01237			
100000263	5520	7	157.921871			
100000263	5520	8	507.501345			
100000263	5520	9	213.312144			
100000263	5520	10	148.62423			
100000263	6495	1	3.433487	COLONIAL LIFE BLVD W	S	COLONIAL LIFE BLVD W
100000263	6495	2	3.115676			
100000263	6495	3	2.791206			
100000263	6495	4	2.325229			
100000263	6495	5	5.101573			
100000263	6495	6	3.796529			
100000263	6495	7	3.0693			
100000263	6495	8	5.57489			
100000263	6495	9	4.362085			
100000263	6495	10	3.672439			
100000265	5139	1	10.074593	GREYSTONE BLVD	N	GREYSTONE BLVD & STONERIDGE DR
100000265	5139	2	10.849279			
100000265	5139	3	11.05101			
100000265	5139	4	10.650698			
100000265	5139	5	11.222209			
100000265	5139	6	11.100674			
100000265	5139	7	11.219843			
100000265	5139	8	11.721181			
100000265	5139	9	10.51282			
100000265	5139	10	9.866588			
100000265	5537	1	52.550051	STONERIDGE DR	W	GREYSTONE BLVD & STONERIDGE DR
100000265	5537	2	51.799171			
100000265	5537	3	35.214321			

Node	Superlink	Run	Average Control Delay	Approach Street Name	Direction	Intersection
100000265	5537	4	32.945854			
100000265	5537	5	43.371588			
100000265	5537	6	46.802654			
100000265	5537	7	40.983668			
100000265	5537	8	52.235286			
100000265	5537	9	42.968277			
100000265	5537	10	39.131675			
100000265	5556	1	14.852751	STONERIDGE DR	E	GREYSTONE BLVD & STONERIDGE DR
100000265	5556	2	14.245685			
100000265	5556	3	14.765716			
100000265	5556	4	14.670313			
100000265	5556	5	16.15582			
100000265	5556	6	16.09105			
100000265	5556	7	15.566491			
100000265	5556	8	15.980675			
100000265	5556	9	16.476763			
100000265	5556	10	14.37681			
100000265	6328	1	19.234694	GREYSTONE BLVD	S	GREYSTONE BLVD & STONERIDGE DR
100000265	6328	2	17.462946			
100000265	6328	3	14.880701			
100000265	6328	4	19.785645			
100000265	6328	5	17.05209			
100000265	6328	6	18.132195			
100000265	6328	7	16.840091			
100000265	6328	8	16.530518			
100000265	6328	9	14.948771			
100000265	6328	10	18.366037			
100000266	5545	1	53.700767	GREYSTONE BLVD	N	GREYSTONE BLVD & BROAD RIVER RD
100000266	5545	2	36.580832			
100000266	5545	3	31.271666			
100000266	5545	4	39.031731			
100000266	5545	5	28.066323			
100000266	5545	6	35.224583			
100000266	5545	7	29.618899			
100000266	5545	8	30.597625			
100000266	5545	9	48.296012			
100000266	5545	10	32.758626			
100000266	6325	1	21.991704	BROAD RIVER RD	W	GREYSTONE BLVD & BROAD RIVER RD
100000266	6325	2	11.525455			
100000266	6325	3	12.284809			
100000266	6325	4	14.737524			
100000266	6325	5	10.761045			
100000266	6325	6	14.106632			
100000266	6325	7	7.971457			
100000266	6325	8	12.377664			
100000266	6325	9	21.738628			
100000266	6325	10	12.935902			
100000266	6327	1	16.291433	BROAD RIVER RD	E	GREYSTONE BLVD & BROAD RIVER RD
100000266	6327	2	15.674388			
100000266	6327	3	17.033771			
100000266	6327	4	16.489057			
100000266	6327	5	15.378405			
100000266	6327	6	16.789557			
100000266	6327	7	15.2555			
100000266	6327	8	15.57312			
100000266	6327	9	18.429121			
100000266	6327	10	15.689339			
100000268	5565	1	42.666358	HUGER ST	N	HUGER ST & LAUREL ST
100000268	5565	2	41.519445			
100000268	5565	3	38.934397			
100000268	5565	4	43.470159			
100000268	5565	5	41.696895			
100000268	5565	6	62.057275			
100000268	5565	7	38.290487			
100000268	5565	8	54.6922			
100000268	5565	9	45.605417			
100000268	5565	10	44.992983			
100000268	5570	1		LAUREL ST	E	HUGER ST & LAUREL ST
100000268	5570	2				
100000268	5570	3				
100000268	5570	4				
100000268	5570	5				
100000268	5570	6				
100000268	5570	7				
100000268	5570	8				
100000268	5570	9				
100000268	5570	10				
100000268	5571	1	9.788686	HUGER ST	S	HUGER ST & LAUREL ST
100000268	5571	2	10.178701			
100000268	5571	3	9.536395			
100000268	5571	4	9.860233			
100000268	5571	5	8.739899			
100000268	5571	6	10.8506			
100000268	5571	7	9.483145			
100000268	5571	8	10.409257			
100000268	5571	9	9.071154			
100000268	5571	10	9.870386			
100000268	5581	1	43.688217	LAUREL ST	W	HUGER ST & LAUREL ST
100000268	5581	2	50.260696			
100000268	5581	3	48.069793			
100000268	5581	4	47.389146			
100000268	5581	5	47.718263			
100000268	5581	6	44.831576			
100000268	5581	7	50.367444			
100000268	5581	8	45.214229			
100000268	5581	9	48.720469			
100000268	5581	10	42.422322			
100000339	6083	1	19.329173	BROAD RIVER RD	NW	BROAD RIVER RD & ST ANDREWS RD
100000339	6083	2	15.494796			
100000339	6083	3	16.149357			
100000339	6083	4	18.304695			
100000339	6083	5	17.84119			
100000339	6083	6	15.508296			
100000339	6083	7	19.034551			
100000339	6083	8	14.683456			
100000339	6083	9	19.178012			
100000339	6083	10	16.476149			
100000339	6084	1	46.194648	BROAD RIVER RD	SE	BROAD RIVER RD & ST ANDREWS RD
100000339	6084	2	28.811344			
100000339	6084	3	27.863583			

Node	Superlink	Run	Average Control Delay	Approach Street Name	Direction	Intersection
100000339	6084	4	32.483346			
100000339	6084	5	33.122985			
100000339	6084	6	32.646331			
100000339	6084	7	29.463451			
100000339	6084	8	27.694332			
100000339	6084	9	80.164081			
100000339	6084	10	29.631021			
100000339	6085	1	115.308891	ST ANDREWS RD	SW	BROAD RIVER RD & ST ANDREWS RD
100000339	6085	2	127.233146			
100000339	6085	3	91.112067			
100000339	6085	4	83.707545			
100000339	6085	5	95.814843			
100000339	6085	6	167.060421			
100000339	6085	7	84.124184			
100000339	6085	8	83.001413			
100000339	6085	9	94.178428			
100000339	6085	10	102.285671			
100000339	6086	1	38.488991	ST ANDREWS RD	E	BROAD RIVER RD & ST ANDREWS RD
100000339	6086	2	39.87562			
100000339	6086	3	39.704236			
100000339	6086	4	40.119836			
100000339	6086	5	36.377013			
100000339	6086	6	38.85762			
100000339	6086	7	34.063381			
100000339	6086	8	43.576543			
100000339	6086	9	55.641339			
100000339	6086	10	37.308766			
100000343	6059	1	0	BROAD RIVER RD	NW	NUNAMAKER DR & BROAD RIVER RD
100000343	6059	2	0			
100000343	6059	3	0			
100000343	6059	4	0			
100000343	6059	5	0			
100000343	6059	6	0			
100000343	6059	7	0			
100000343	6059	8	0			
100000343	6059	9	0			
100000343	6059	10	0			
100000343	6063	1		NUNAMAKER DR	SW	NUNAMAKER DR & BROAD RIVER RD
100000343	6063	2				
100000343	6063	3				
100000343	6063	4				
100000343	6063	5				
100000343	6063	6				
100000343	6063	7				
100000343	6063	8				
100000343	6063	9				
100000343	6063	10				
100000343	6065	1	0.011339	BROAD RIVER RD	SE	NUNAMAKER DR & BROAD RIVER RD
100000343	6065	2	0.005226			
100000343	6065	3	0.005491			
100000343	6065	4	0.003657			
100000343	6065	5	0.006023			
100000343	6065	6	0.003662			
100000343	6065	7	0.001488			
100000343	6065	8	0.004588			
100000343	6065	9	0.007075			
100000343	6065	10	0.003686			
100000344	6065	1	91.875692	BROAD RIVER RD	NW	YOUNG DR
100000344	6065	2	59.867326			
100000344	6065	3	50.015167			
100000344	6065	4	64.25357			
100000344	6065	5	50.476139			
100000344	6065	6	61.196712			
100000344	6065	7	46.288763			
100000344	6065	8	51.21792			
100000344	6065	9	86.382718			
100000344	6065	10	57.259324			
100000344	6066	1	169.909107	BROAD RIVER RD	SE	YOUNG DR
100000344	6066	2	68.044574			
100000344	6066	3	14.61084			
100000344	6066	4	117.027229			
100000344	6066	5	24.533013			
100000344	6066	6	43.475248			
100000344	6066	7	37.928529			
100000344	6066	8	32.422755			
100000344	6066	9	157.130087			
100000344	6066	10	23.410686			
100000344	6067	1	241.649051	YOUNG DR	SW	YOUNG DR
100000344	6067	2	219.34			
100000344	6067	3	215.49614			
100000344	6067	4	255.558095			
100000344	6067	5	232.948287			
100000344	6067	6	229.402223			
100000344	6067	7	258.547901			
100000344	6067	8	223.545344			
100000344	6067	9	234.21875			
100000344	6067	10	234.94873			
100000344	6068	1	183.536531	SEMINOLE RD	NE	YOUNG DR
100000344	6068	2	183.595638			
100000344	6068	3	190.26818			
100000344	6068	4	204.08394			
100000344	6068	5	198.761577			
100000344	6068	6	201.326586			
100000344	6068	7	189.565487			
100000344	6068	8	200.186359			
100000344	6068	9	193.919605			
100000344	6068	10	196.425094			
100000348	5116	1	9.482846	ST ANDREWS RD	NW	ST ANDREWS RD & JAMIL RD
100000348	5116	2	10.10288			
100000348	5116	3	9.145591			
100000348	5116	4	9.739689			
100000348	5116	5	9.762419			
100000348	5116	6	9.25475			
100000348	5116	7	11.218907			
100000348	5116	8	9.908131			
100000348	5116	9	9.505371			
100000348	5116	10	10.17475			
100000348	6114	1	23.183142	ST ANDREWS RD	E	ST ANDREWS RD & JAMIL RD
100000348	6114	2	12.497881			
100000348	6114	3	16.441818			

Node	Superlink	Run	Average Control Delay	Approach Street Name	Direction	Intersection
100000348	6114	4	14.228808			
100000348	6114	5	25.444783			
100000348	6114	6	10.703131			
100000348	6114	7	10.527527			
100000348	6114	8	9.079405			
100000348	6114	9	9.897676			
100000348	6114	10	11.96742			
100000348	6119	1	29.523582	JAMIL RD	S	ST ANDREWS RD & JAMIL RD
100000348	6119	2	29.184051			
100000348	6119	3	26.76046			
100000348	6119	4	28.477919			
100000348	6119	5	26.929164			
100000348	6119	6	30.713063			
100000348	6119	7	29.859856			
100000348	6119	8	28.678286			
100000348	6119	9	28.333173			
100000348	6119	10	29.5922			
100000349	6066	1	9.697053	BROAD RIVER RD	NW	ST ANDREWS PKY & BROAD RIVER RD
100000349	6066	2	5.782836			
100000349	6066	3	4.662906			
100000349	6066	4	7.709224			
100000349	6066	5	4.034279			
100000349	6066	6	5.057174			
100000349	6066	7	4.225031			
100000349	6066	8	4.878641			
100000349	6066	9	10.317871			
100000349	6066	10	5.643374			
100000349	6078	1	228.420003	ST ANDREWS PKY	SW	ST ANDREWS PKY & BROAD RIVER RD
100000349	6078	2	67.96294			
100000349	6078	3	79.109686			
100000349	6078	4	159.212909			
100000349	6078	5	62.394013			
100000349	6078	6	70.830874			
100000349	6078	7	60.941785			
100000349	6078	8	75.286384			
100000349	6078	9	216.807789			
100000349	6078	10	59.59161			
100000349	6079	1	167.941315	BROAD RIVER RD	NE	ST ANDREWS PKY & BROAD RIVER RD
100000349	6079	2	18.75794			
100000349	6079	3	16.589172			
100000349	6079	4	42.64099			
100000349	6079	5	17.357709			
100000349	6079	6	22.309299			
100000349	6079	7	17.661368			
100000349	6079	8	19.595185			
100000349	6079	9	79.446468			
100000349	6079	10	20.215143			
100000349	6083	1	63.095358	BROAD RIVER RD	SE	ST ANDREWS PKY & BROAD RIVER RD
100000349	6083	2	4.142362			
100000349	6083	3	3.766375			
100000349	6083	4	18.165244			
100000349	6083	5	3.991237			
100000349	6083	6	4.563041			
100000349	6083	7	3.808965			
100000349	6083	8	3.829373			
100000349	6083	9	60.544041			
100000349	6083	10	3.351918			
100000353	5104	1	17.264434	PINEY GROVE RD	W	BOWER PKY
100000353	5104	2	18.057024			
100000353	5104	3	18.552266			
100000353	5104	4	16.475371			
100000353	5104	5	17.496795			
100000353	5104	6	20.864099			
100000353	5104	7	19.090091			
100000353	5104	8	18.698944			
100000353	5104	9	14.799581			
100000353	5104	10	18.944585			
100000353	6125	1	46.727551	BOWER PKY	SE	BOWER PKY
100000353	6125	2	51.254415			
100000353	6125	3	48.92275			
100000353	6125	4	47.570347			
100000353	6125	5	45.627413			
100000353	6125	6	44.745566			
100000353	6125	7	49.83779			
100000353	6125	8	46.938196			
100000353	6125	9	52.302283			
100000353	6125	10	47.585449			
100000353	6126	1	31.271977	PINEY GROVE RD	E	BOWER PKY
100000353	6126	2	30.540541			
100000353	6126	3	36.533556			
100000353	6126	4	33.025752			
100000353	6126	5	30.194437			
100000353	6126	6	30.525825			
100000353	6126	7	31.387778			
100000353	6126	8	30.537938			
100000353	6126	9	33.249549			
100000353	6126	10	32.076706			
100000353	6127	1	72.418624	JAMIL RD	NW	BOWER PKY
100000353	6127	2	76.436101			
100000353	6127	3	52.888279			
100000353	6127	4	99.212059			
100000353	6127	5	68.748043			
100000353	6127	6	55.345297			
100000353	6127	7	53.206203			
100000353	6127	8	95.049706			
100000353	6127	9	94.474163			
100000353	6127	10	56.018887			
100000354	6095	1	36.263757	ST ANDREWS RD	SW	ST ANDREWS RD
100000354	6095	2	38.276591			
100000354	6095	3	33.415361			
100000354	6095	4	56.322802			
100000354	6095	5	44.042239			
100000354	6095	6	42.132134			
100000354	6095	7	40.723102			
100000354	6095	8	32.561154			
100000354	6095	9	42.659822			
100000354	6095	10	26.684427			
100000354	6096	1	12.118827	ST ANDREWS RD	NE	ST ANDREWS RD
100000354	6096	2	11.790691			
100000354	6096	3	10.705436			

Node	Superlink	Run	Average Control Delay	Approach Street Name	Direction	Intersection
100000354	6096	4	12.983268			
100000354	6096	5	10.694164			
100000354	6096	6	11.32454			
100000354	6096	7	9.986917			
100000354	6096	8	8.945211			
100000354	6096	9	10.131261			
100000354	6096	10	10.41444			
100000354	6098	1	85.380531	CHARTWELL RD	NW	ST ANDREWS RD
100000354	6098	2	91.001871			
100000354	6098	3	70.351806			
100000354	6098	4	51.746246			
100000354	6098	5	62.411257			
100000354	6098	6	77.859948			
100000354	6098	7	39.932972			
100000354	6098	8	49.723328			
100000354	6098	9	54.361693			
100000354	6098	10	64.857291			
100000354	6099	1	79.950299	KAY ST	SE	ST ANDREWS RD
100000354	6099	2	146.045103			
100000354	6099	3	99.2896			
100000354	6099	4	213.097108			
100000354	6099	5	121.018856			
100000354	6099	6	82.182512			
100000354	6099	7	96.563891			
100000354	6099	8	106.054146			
100000354	6099	9	82.052044			
100000354	6099	10	65.229869			
100000356	6086	1	0.424637	ST ANDREWS RD	SW	LAWRENCE ST & ST ANDREWS RD
100000356	6086	2	0.505802			
100000356	6086	3	0.424108			
100000356	6086	4	0.455891			
100000356	6086	5	0.51592			
100000356	6086	6	0.412192			
100000356	6086	7	0.453969			
100000356	6086	8	0.419666			
100000356	6086	9	0.422831			
100000356	6086	10	0.534221			
100000356	6092	1	13.773156	LAWRENCE ST	SE	LAWRENCE ST & ST ANDREWS RD
100000356	6092	2	14.49343			
100000356	6092	3	11.549076			
100000356	6092	4	12.404131			
100000356	6092	5	12.242198			
100000356	6092	6	12.620386			
100000356	6092	7	11.877908			
100000356	6092	8	11.121954			
100000356	6092	9	11.783244			
100000356	6092	10	12.508177			
100000356	6094	1	3.219495	ST ANDREWS RD	NE	LAWRENCE ST & ST ANDREWS RD
100000356	6094	2	3.06645			
100000356	6094	3	3.039084			
100000356	6094	4	2.873805			
100000356	6094	5	2.581034			
100000356	6094	6	3.33937			
100000356	6094	7	3.346846			
100000356	6094	8	2.74291			
100000356	6094	9	2.467354			
100000356	6094	10	2.858562			
100000357	6119	1	1.958327	JAMIL RD	NW	JAMIL RD & PAISLEY LN
100000357	6119	2	1.742462			
100000357	6119	3	2.220519			
100000357	6119	4	2.303426			
100000357	6119	5	1.964486			
100000357	6119	6	2.270377			
100000357	6119	7	2.454194			
100000357	6119	8	1.904984			
100000357	6119	9	2.256065			
100000357	6119	10	2.350619			
100000357	6120	1	135.239628	PAISLEY LN	NE	JAMIL RD & PAISLEY LN
100000357	6120	2	144.629909			
100000357	6120	3	124.993263			
100000357	6120	4	150.152063			
100000357	6120	5	142.597842			
100000357	6120	6	144.111976			
100000357	6120	7	131.167757			
100000357	6120	8	107.950292			
100000357	6120	9	136.162278			
100000357	6120	10	156.473007			
100000357	6121	1	0.977572	JAMIL RD	SE	JAMIL RD & PAISLEY LN
100000357	6121	2	1.827326			
100000357	6121	3	1.58556			
100000357	6121	4	1.674193			
100000357	6121	5	1.484833			
100000357	6121	6	1.802836			
100000357	6121	7	1.31771			
100000357	6121	8	1.444999			
100000357	6121	9	0.997359			
100000357	6121	10	1.577878			
100000358	5117	1	15.922238	ST ANDREWS RD	NE	ST ANDREWS RD
100000358	5117	2	15.772236			
100000358	5117	3	16.264719			
100000358	5117	4	14.388568			
100000358	5117	5	15.667173			
100000358	5117	6	16.091746			
100000358	5117	7	16.010683			
100000358	5117	8	14.933532			
100000358	5117	9	15.786089			
100000358	5117	10	16.346372			
100000358	6100	1	23.819197	ST ANDREWS RD	SW	ST ANDREWS RD
100000358	6100	2	24.05745			
100000358	6100	3	24.569344			
100000358	6100	4	25.339489			
100000358	6100	5	24.614569			
100000358	6100	6	24.03756			
100000358	6100	7	24.327609			
100000358	6100	8	24.209519			
100000358	6100	9	23.892255			
100000358	6100	10	22.948967			
100000358	6101	1	48.466864	BURNING TREE RD	NW	ST ANDREWS RD
100000358	6101	2	54.500947			
100000358	6101	3	54.159458			

Node	Superlink	Run	Average Control Delay	Approach Street Name	Direction	Intersection
100000358	6101	4	56.257753			
100000358	6101	5	51.87666			
100000358	6101	6	51.57036			
100000358	6101	7	53.698802			
100000358	6101	8	55.273269			
100000358	6101	9	57.132889			
100000358	6101	10	53.846174			
100000358	6102	1	63.019105	FERNANDINA RD	SE	ST ANDREWS RD
100000358	6102	2	73.496127			
100000358	6102	3	65.136865			
100000358	6102	4	65.066046			
100000358	6102	5	67.880609			
100000358	6102	6	62.122396			
100000358	6102	7	65.661815			
100000358	6102	8	67.033337			
100000358	6102	9	70.655945			
100000358	6102	10	67.267927			
100000360	3294	1	19.523624	EXIT 106 WB OFF RAMP	NE	EXIT 106 WB OFF RAMP & BURNING TREE RD
100000360	3294	2	29.1493			
100000360	3294	3	27.894612			
100000360	3294	4	43.892191			
100000360	3294	5	25.705761			
100000360	3294	6	34.710116			
100000360	3294	7	28.363291			
100000360	3294	8	23.706042			
100000360	3294	9	34.342564			
100000360	3294	10	37.538248			
100000360	6101	1	0.05996	BURNING TREE RD	S	EXIT 106 WB OFF RAMP & BURNING TREE RD
100000360	6101	2	0.071173			
100000360	6101	3	0.033093			
100000360	6101	4	0.110237			
100000360	6101	5	0.030353			
100000360	6101	6	0.116908			
100000360	6101	7	0.118897			
100000360	6101	8	0.081865			
100000360	6101	9	0.126536			
100000360	6101	10	0.056213			
100000360	6105	1	0.001445	BURNING TREE RD	N	EXIT 106 WB OFF RAMP & BURNING TREE RD
100000360	6105	2	0			
100000360	6105	3	0			
100000360	6105	4	0.058751			
100000360	6105	5	0.001613			
100000360	6105	6	0.000962			
100000360	6105	7	0			
100000360	6105	8	0			
100000360	6105	9	0			
100000360	6105	10	0			
100000362	6134	1	27.680433	JAMIL RD	NW	HARBISON BLVD & JAMIL RD
100000362	6134	2	19.440376			
100000362	6134	3	20.615707			
100000362	6134	4	26.284473			
100000362	6134	5	27.041353			
100000362	6134	6	18.673197			
100000362	6134	7	26.075238			
100000362	6134	8	20.058411			
100000362	6134	9	23.996569			
100000362	6134	10	24.29209			
100000362	6137	1	2.336291	HARBISON BLVD	NE	HARBISON BLVD & JAMIL RD
100000362	6137	2	1.272882			
100000362	6137	3	1.770003			
100000362	6137	4	1.886447			
100000362	6137	5	2.446736			
100000362	6137	6	2.229839			
100000362	6137	7	1.96893			
100000362	6137	8	1.767058			
100000362	6137	9	2.095432			
100000362	6137	10	2.54197			
100000362	6473	1	0.031242	HARBISON BLVD	SW	HARBISON BLVD & JAMIL RD
100000362	6473	2	0.002029			
100000362	6473	3	0.001525			
100000362	6473	4	0.004941			
100000362	6473	5	0.001616			
100000362	6473	6	0.003928			
100000362	6473	7	0.015848			
100000362	6473	8	0.027553			
100000362	6473	9	0.007354			
100000362	6473	10	0.019023			
100000363	6125	1	0.852925	BOWER PKY	NW	BOWER PKY & JAMIL RD
100000363	6125	2	0.926125			
100000363	6125	3	0.892622			
100000363	6125	4	0.696893			
100000363	6125	5	0.849486			
100000363	6125	6	0.839957			
100000363	6125	7	0.603351			
100000363	6125	8	0.895025			
100000363	6125	9	0.747995			
100000363	6125	10	0.627288			
100000363	6134	1	32.18015	JAMIL RD	SW	BOWER PKY & JAMIL RD
100000363	6134	2	84.762621			
100000363	6134	3	115.632542			
100000363	6134	4	170.495102			
100000363	6134	5	103.216398			
100000363	6134	6	167.480201			
100000363	6134	7	68.630331			
100000363	6134	8	78.654817			
100000363	6134	9	75.259094			
100000363	6134	10	174.53691			
100000363	6160	1	0.402131	BOWER PKY	SE	BOWER PKY & JAMIL RD
100000363	6160	2	0.554008			
100000363	6160	3	0.617771			
100000363	6160	4	0.647661			
100000363	6160	5	0.654846			
100000363	6160	6	0.653412			
100000363	6160	7	0.675759			
100000363	6160	8	0.722004			
100000363	6160	9	0.597858			
100000363	6160	10	0.569381			
100000364	6145	1	4.688908	HARBISON BLVD	SW	HARBISON BLVD & COLUMBIANA DR
100000364	6145	2	3.787072			
100000364	6145	3	3.807328			

Node	Superlink	Run	Average Control Delay	Approach Street Name	Direction	Intersection
100000364	6145	4	4.211205			
100000364	6145	5	5.905064			
100000364	6145	6	4.544429			
100000364	6145	7	3.78783			
100000364	6145	8	3.966226			
100000364	6145	9	5.855563			
100000364	6145	10	4.559245			
100000364	6176	1	3.63455	HARBISON BLVD	NE	HARBISON BLVD & COLUMBIANA DR
100000364	6176	2	3.162258			
100000364	6176	3	4.054898			
100000364	6176	4	3.380817			
100000364	6176	5	4.370288			
100000364	6176	6	4.042875			
100000364	6176	7	3.372895			
100000364	6176	8	3.394463			
100000364	6176	9	4.053184			
100000364	6176	10	3.547051			
100000364	6177	1		COLUMBIANA DR	NW	HARBISON BLVD & COLUMBIANA DR
100000364	6177	2				
100000364	6177	3				
100000364	6177	4				
100000364	6177	5				
100000364	6177	6				
100000364	6177	7				
100000364	6177	8				
100000364	6177	9				
100000364	6177	10				
100000364	6196	1	52.94263	COLUMBIANA DR	SE	HARBISON BLVD & COLUMBIANA DR
100000364	6196	2	48.087481			
100000364	6196	3	57.581804			
100000364	6196	4	50.795924			
100000364	6196	5	55.102459			
100000364	6196	6	56.716844			
100000364	6196	7	60.528465			
100000364	6196	8	59.453752			
100000364	6196	9	58.688731			
100000364	6196	10	61.406766			
100000365	6137	1	13.203983	HARBISON BLVD	SW	COLUMBIANA CIR
100000365	6137	2	11.602367			
100000365	6137	3	12.111962			
100000365	6137	4	12.613886			
100000365	6137	5	13.638338			
100000365	6137	6	11.652424			
100000365	6137	7	11.958426			
100000365	6137	8	11.336534			
100000365	6137	9	11.169383			
100000365	6137	10	11.756064			
100000365	6140	1	50.18792	COLUMBIANA CIR	SE	COLUMBIANA CIR
100000365	6140	2	55.331824			
100000365	6140	3	53.943895			
100000365	6140	4	47.280924			
100000365	6140	5	49.739359			
100000365	6140	6	49.667216			
100000365	6140	7	49.810762			
100000365	6140	8	48.337491			
100000365	6140	9	50.537625			
100000365	6140	10	46.392489			
100000365	6145	1	12.31723	HARBISON BLVD	NE	COLUMBIANA CIR
100000365	6145	2	13.434552			
100000365	6145	3	14.741017			
100000365	6145	4	13.694031			
100000365	6145	5	14.619515			
100000365	6145	6	14.995969			
100000365	6145	7	14.747327			
100000365	6145	8	12.630679			
100000365	6145	9	12.521611			
100000365	6145	10	13.151183			
100000365	6151	1	46.50099	PARK TERRACE DR	NW	COLUMBIANA CIR
100000365	6151	2	49.499719			
100000365	6151	3	43.211567			
100000365	6151	4	44.116703			
100000365	6151	5	49.135022			
100000365	6151	6	47.867873			
100000365	6151	7	44.853137			
100000365	6151	8	46.9753			
100000365	6151	9	51.743484			
100000365	6151	10	47.946377			
100000374	6151	1	62.55521	PARK TERRACE DR	S	BOWER PKY
100000374	6151	2	60.121349			
100000374	6151	3	125.634784			
100000374	6151	4	61.640339			
100000374	6151	5	82.621582			
100000374	6151	6	62.336349			
100000374	6151	7	59.776289			
100000374	6151	8	101.258125			
100000374	6151	9	53.842226			
100000374	6151	10	110.427701			
100000374	6160	1	15.939664	BOWER PKY	W	BOWER PKY
100000374	6160	2	18.079019			
100000374	6160	3	20.61072			
100000374	6160	4	17.265118			
100000374	6160	5	17.44128			
100000374	6160	6	17.735538			
100000374	6160	7	16.048419			
100000374	6160	8	19.025119			
100000374	6160	9	18.155013			
100000374	6160	10	20.097702			
100000374	6161	1	4.068136		N	BOWER PKY
100000374	6161	2	4.678533			
100000374	6161	3	4.95413			
100000374	6161	4	4.774969			
100000374	6161	5	4.76342			
100000374	6161	6	4.676352			
100000374	6161	7	4.89041			
100000374	6161	8	4.392767			
100000374	6161	9	4.446016			
100000374	6161	10	4.629128			
100000374	6162	1		BOWER PKY	E	BOWER PKY
100000374	6162	2				
100000374	6162	3				

Node	Superlink	Run	Average Control Delay	Approach Street Name	Direction	Intersection
100000374	6162	4				
100000374	6162	5				
100000374	6162	6				
100000374	6162	7				
100000374	6162	8				
100000374	6162	9				
100000374	6162	10				
100000375	6196	1	7.140992	COLUMBIANA DR	NW	COLUMBIANA DR
100000375	6196	2	5.306438			
100000375	6196	3	4.760089			
100000375	6196	4	5.861034			
100000375	6196	5	5.775858			
100000375	6196	6	4.600195			
100000375	6196	7	5.209983			
100000375	6196	8	6.798682			
100000375	6196	9	4.944456			
100000375	6196	10	6.44107			
100000375	6204	1	6.219628	COLUMBIANA DR	SE	COLUMBIANA DR
100000375	6204	2	6.839032			
100000375	6204	3	5.110575			
100000375	6204	4	5.405997			
100000375	6204	5	5.19839			
100000375	6204	6	6.979317			
100000375	6204	7	5.974926			
100000375	6204	8	6.149025			
100000375	6204	9	4.97235			
100000375	6204	10	5.327594			
100000375	6550	1	26.43922	CROSSBOW DR	NE	COLUMBIANA DR
100000375	6550	2	25.380341			
100000375	6550	3	27.33934			
100000375	6550	4	25.1496			
100000375	6550	5	26.066844			
100000375	6550	6	25.352186			
100000375	6550	7	24.496665			
100000375	6550	8	23.304543			
100000375	6550	9	24.58405			
100000375	6550	10	26.395885			
100000375	6551	1	6.686465	DRIVEWAY	SW	COLUMBIANA DR
100000375	6551	2	7.476503			
100000375	6551	3	6.720585			
100000375	6551	4	7.002452			
100000375	6551	5	6.403263			
100000375	6551	6	6.438743			
100000375	6551	7	5.924268			
100000375	6551	8	5.96433			
100000375	6551	9	6.364067			
100000375	6551	10	6.397175			
100000391	5071	1	5.346575	BROAD RIVER RD	NW	BROAD RIVER RD & COLUMBIANA DR
100000391	5071	2	5.88586			
100000391	5071	3	5.449567			
100000391	5071	4	5.478072			
100000391	5071	5	5.838297			
100000391	5071	6	5.425886			
100000391	5071	7	5.162076			
100000391	5071	8	4.888623			
100000391	5071	9	5.304318			
100000391	5071	10	5.204499			
100000391	6214	1	53.655072	COLUMBIANA DR	NE	BROAD RIVER RD & COLUMBIANA DR
100000391	6214	2	49.696272			
100000391	6214	3	51.203035			
100000391	6214	4	43.586481			
100000391	6214	5	40.294768			
100000391	6214	6	46.157257			
100000391	6214	7	46.757689			
100000391	6214	8	46.614689			
100000391	6214	9	44.684781			
100000391	6214	10	49.823858			
100000391	6224	1	9.237649	BROAD RIVER RD	SE	BROAD RIVER RD & COLUMBIANA DR
100000391	6224	2	10.826797			
100000391	6224	3	7.754543			
100000391	6224	4	9.078724			
100000391	6224	5	8.934479			
100000391	6224	6	8.453379			
100000391	6224	7	9.880504			
100000391	6224	8	8.893354			
100000391	6224	9	9.608322			
100000391	6224	10	9.532495			
100000392	6121	1	0.461117	JAMIL RD	NW	TRAM RD & JAMIL RD
100000392	6121	2	1.171427			
100000392	6121	3	0.495238			
100000392	6121	4	0.955821			
100000392	6121	5	0.798865			
100000392	6121	6	1.041239			
100000392	6121	7	0.523173			
100000392	6121	8	1.295188			
100000392	6121	9	1.032704			
100000392	6121	10	0.718415			
100000392	6127	1	0.221275	JAMIL RD	SE	TRAM RD & JAMIL RD
100000392	6127	2	0.543082			
100000392	6127	3	0.736795			
100000392	6127	4	0.353627			
100000392	6127	5	0.242276			
100000392	6127	6	0.254465			
100000392	6127	7	0.377608			
100000392	6127	8	0.693335			
100000392	6127	9	0.493856			
100000392	6127	10	0.134253			
100000392	6261	1	9.841201	TRAM RD	NE	TRAM RD & JAMIL RD
100000392	6261	2	9.893968			
100000392	6261	3	9.405133			
100000392	6261	4	9.547131			
100000392	6261	5	10.177608			
100000392	6261	6	9.67856			
100000392	6261	7	10.985226			
100000392	6261	8	9.636672			
100000392	6261	9	11.11332			
100000392	6261	10	8.736093			
100000394	6204	1	0	COLUMBIANA DR	NW	COLUMBIANA DR
100000394	6204	2	0			
100000394	6204	3	0			

Node	Superlink	Run	Average Control Delay	Approach Street Name	Direction	Intersection
100000394	6204	4	0			
100000394	6204	5	0			
100000394	6204	6	0			
100000394	6204	7	0			
100000394	6204	8	0			
100000394	6204	9	0			
100000394	6204	10	0			
100000394	6208	1	0	COLUMBIANA DR	SE	COLUMBIANA DR
100000394	6208	2	0			
100000394	6208	3	0			
100000394	6208	4	0			
100000394	6208	5	0			
100000394	6208	6	0			
100000394	6208	7	0			
100000394	6208	8	0			
100000394	6208	9	0			
100000394	6208	10	0			
100000394	6210	1		COLUMBIA AVE	NE	COLUMBIANA DR
100000394	6210	2				
100000394	6210	3				
100000394	6210	4				
100000394	6210	5				
100000394	6210	6				
100000394	6210	7				
100000394	6210	8				
100000394	6210	9				
100000394	6210	10				
100000394	6549	1		DRIVEWAY	SW	COLUMBIANA DR
100000394	6549	2				
100000394	6549	3				
100000394	6549	4				
100000394	6549	5				
100000394	6549	6				
100000394	6549	7				
100000394	6549	8				
100000394	6549	9				
100000394	6549	10				
100000395	5084	1	148.477113	LAKE MURRAY BLVD	W	LAKE MURRAY BLVD & COLUMBIANA DR
100000395	5084	2	157.940156			
100000395	5084	3	137.722611			
100000395	5084	4	154.181792			
100000395	5084	5	148.082873			
100000395	5084	6	148.199924			
100000395	5084	7	143.382647			
100000395	5084	8	134.13417			
100000395	5084	9	146.695231			
100000395	5084	10	153.823611			
100000395	6208	1	226.293265	COLUMBIANA DR	NW	LAKE MURRAY BLVD & COLUMBIANA DR
100000395	6208	2	215.077443			
100000395	6208	3	228.345893			
100000395	6208	4	242.922844			
100000395	6208	5	240.730057			
100000395	6208	6	237.819709			
100000395	6208	7	228.1652			
100000395	6208	8	236.114704			
100000395	6208	9	230.078008			
100000395	6208	10	230.776338			
100000395	6214	1	30.773517	COLUMBIANA DR	S	LAKE MURRAY BLVD & COLUMBIANA DR
100000395	6214	2	33.098052			
100000395	6214	3	33.591853			
100000395	6214	4	42.12616			
100000395	6214	5	24.581929			
100000395	6214	6	30.931097			
100000395	6214	7	38.095421			
100000395	6214	8	26.101513			
100000395	6214	9	33.798421			
100000395	6214	10	31.742881			
100000395	6215	1	178.002402	LAKE MURRAY BLVD	E	LAKE MURRAY BLVD & COLUMBIANA DR
100000395	6215	2	141.419164			
100000395	6215	3	150.398781			
100000395	6215	4	161.908375			
100000395	6215	5	159.369554			
100000395	6215	6	131.612835			
100000395	6215	7	179.357751			
100000395	6215	8	169.764485			
100000395	6215	9	183.574476			
100000395	6215	10	156.224985			
100000398	5101	1	0.209441	HARBISON BLVD	W	HARBISON BLVD & PARKRIDGE DR
100000398	5101	2	0.244491			
100000398	5101	3	0.141102			
100000398	5101	4	0.23922			
100000398	5101	5	0.263118			
100000398	5101	6	0.158352			
100000398	5101	7	0.249222			
100000398	5101	8	0.246215			
100000398	5101	9	0.180925			
100000398	5101	10	0.200043			
100000398	6267	1	7.964026	PARKRIDGE DR	SE	HARBISON BLVD & PARKRIDGE DR
100000398	6267	2	10.211186			
100000398	6267	3	9.87132			
100000398	6267	4	8.505805			
100000398	6267	5	8.518371			
100000398	6267	6	9.402442			
100000398	6267	7	8.414319			
100000398	6267	8	8.245182			
100000398	6267	9	7.625186			
100000398	6267	10	9.494592			
100000398	6268	1	5.885611	HARBISON BLVD	NE	HARBISON BLVD & PARKRIDGE DR
100000398	6268	2	5.671143			
100000398	6268	3	5.5095			
100000398	6268	4	5.940059			
100000398	6268	5	5.589318			
100000398	6268	6	7.093474			
100000398	6268	7	5.670753			
100000398	6268	8	5.517415			
100000398	6268	9	5.024323			
100000398	6268	10	5.696042			
100000399	5113	1	32.823246	PINEY GROVE RD	E	PINEY GROVE RD & FERNANDINA RD
100000399	5113	2	37.588051			
100000399	5113	3	29.818888			

Node	Superlink	Run	Average Control Delay	Approach Street Name	Direction	Intersection
100000399	5113	4	35.193257			
100000399	5113	5	29.446974			
100000399	5113	6	33.50979			
100000399	5113	7	28.042756			
100000399	5113	8	34.445724			
100000399	5113	9	35.798932			
100000399	5113	10	30.241692			
100000399	6263	1	22.333134	PINEY GROVE RD	W	PINEY GROVE RD & FERNANDINA RD
100000399	6263	2	24.373684			
100000399	6263	3	23.745942			
100000399	6263	4	24.822927			
100000399	6263	5	23.761834			
100000399	6263	6	22.681643			
100000399	6263	7	20.918937			
100000399	6263	8	22.512782			
100000399	6263	9	22.575643			
100000399	6263	10	20.069807			
100000399	6265	1	13.353276	FERNANDINA RD	SE	PINEY GROVE RD & FERNANDINA RD
100000399	6265	2	14.068781			
100000399	6265	3	13.78025			
100000399	6265	4	12.387043			
100000399	6265	5	14.459422			
100000399	6265	6	14.823981			
100000399	6265	7	14.206417			
100000399	6265	8	14.46991			
100000399	6265	9	12.56969			
100000399	6265	10	14.533546			
100000399	6266	1	53.434418	FERNANDINA RD	N	PINEY GROVE RD & FERNANDINA RD
100000399	6266	2	46.455414			
100000399	6266	3	53.073042			
100000399	6266	4	47.460953			
100000399	6266	5	50.729913			
100000399	6266	6	50.709751			
100000399	6266	7	55.072146			
100000399	6266	8	44.323682			
100000399	6266	9	49.954426			
100000399	6266	10	58.266563			
100000401	5093	1	19.836482	LAKE MURRAY BLVD	E	KINLEY RD
100000401	5093	2	21.19752			
100000401	5093	3	19.613333			
100000401	5093	4	19.997194			
100000401	5093	5	21.2138			
100000401	5093	6	19.327955			
100000401	5093	7	20.326559			
100000401	5093	8	18.657002			
100000401	5093	9	21.828679			
100000401	5093	10	23.161901			
100000401	6276	1	552.111582	KINLEY RD	S	KINLEY RD
100000401	6276	2	712.000267			
100000401	6276	3	914.447802			
100000401	6276	4	679.634211			
100000401	6276	5	698.872208			
100000401	6276	6	1013.404449			
100000401	6276	7	618.097806			
100000401	6276	8	621.657025			
100000401	6276	9	719.842797			
100000401	6276	10	960.793421			
100000401	6313	1	618.469741	LAKE MURRAY BLVD	W	KINLEY RD
100000401	6313	2	858.763343			
100000401	6313	3	725.350886			
100000401	6313	4	837.127189			
100000401	6313	5	796.513638			
100000401	6313	6	957.827333			
100000401	6313	7	655.633059			
100000401	6313	8	569.8622			
100000401	6313	9	593.505073			
100000401	6313	10	1017.908244			
100000401	6556	1	138.56505	PARKRIDGE DR	N	KINLEY RD
100000401	6556	2	198.358872			
100000401	6556	3	184.919206			
100000401	6556	4	139.385589			
100000401	6556	5	197.732183			
100000401	6556	6	155.969936			
100000401	6556	7	76.877446			
100000401	6556	8	262.707406			
100000401	6556	9	297.554782			
100000401	6556	10	402.360064			
100000438	2044	1	0	RAMP	SE	RAMP
100000438	2044	2	0			
100000438	2044	3	0			
100000438	2044	4	0			
100000438	2044	5	0			
100000438	2044	6	0			
100000438	2044	7	0			
100000438	2044	8	0			
100000438	2044	9	0			
100000438	2044	10	0			
100000438	5021	1	6.161194	SUNSET BLVD	NW	RAMP
100000438	5021	2	7.034571			
100000438	5021	3	7.920311			
100000438	5021	4	6.800476			
100000438	5021	5	7.395898			
100000438	5021	6	7.681598			
100000438	5021	7	7.446592			
100000438	5021	8	7.503242			
100000438	5021	9	7.768781			
100000438	5021	10	7.166073			
100000438	5023	1	0.735823	SUNSET BLVD	SE	RAMP
100000438	5023	2	0.265807			
100000438	5023	3	0.416173			
100000438	5023	4	0.354217			
100000438	5023	5	0.504951			
100000438	5023	6	0.338662			
100000438	5023	7	0.432688			
100000438	5023	8	0.496391			
100000438	5023	9	0.314044			
100000438	5023	10	0.551057			
100000446	2047	1	0	RAMP	S	RAMP & I-20 EXIT 63 WB ON RAMP
100000446	2047	2	0			
100000446	2047	3	0			

Node	Superlink	Run	Average Control Delay	Approach Street Name	Direction	Intersection
100000446	2047	4	0			
100000446	2047	5	0			
100000446	2047	6	0			
100000446	2047	7	0			
100000446	2047	8	0			
100000446	2047	9	0			
100000446	2047	10	0			
100000446	2059	1	0	RAMP	SW	RAMP & I-20 EXIT 63 WB ON RAMP
100000446	2059	2	0			
100000446	2059	3	0			
100000446	2059	4	0			
100000446	2059	5	0			
100000446	2059	6	0			
100000446	2059	7	0			
100000446	2059	8	0			
100000446	2059	9	0			
100000446	2059	10	0			
100000450	2060	1	0	RAMP	E	BUSH RIVER RD
100000450	2060	2	0			
100000450	2060	3	0			
100000450	2060	4	0			
100000450	2060	5	0			
100000450	2060	6	0			
100000450	2060	7	0			
100000450	2060	8	0			
100000450	2060	9	0			
100000450	2060	10	0			
100000450	5037	1	0	BUSH RIVER RD	E	BUSH RIVER RD
100000450	5037	2	0			
100000450	5037	3	0			
100000450	5037	4	0			
100000450	5037	5	0			
100000450	5037	6	0			
100000450	5037	7	0			
100000450	5037	8	0			
100000450	5037	9	0			
100000450	5037	10	0			
100000450	5038	1	1.639199	BUSH RIVER RD	NW	BUSH RIVER RD
100000450	5038	2	2.079455			
100000450	5038	3	2.898753			
100000450	5038	4	1.793602			
100000450	5038	5	2.19708			
100000450	5038	6	2.206602			
100000450	5038	7	2.035462			
100000450	5038	8	1.860955			
100000450	5038	9	1.302035			
100000450	5038	10	1.792084			
100000452	2071	1	35.516662	RAMP	W	RAMP & BUSH RIVER RD
100000452	2071	2	40.936516			
100000452	2071	3	39.355933			
100000452	2071	4	40.159808			
100000452	2071	5	38.5381			
100000452	2071	6	38.983812			
100000452	2071	7	40.066172			
100000452	2071	8	37.646851			
100000452	2071	9	40.085125			
100000452	2071	10	40.939197			
100000452	5034	1	1.146959	BUSH RIVER RD	NW	RAMP & BUSH RIVER RD
100000452	5034	2	2.580734			
100000452	5034	3	1.806646			
100000452	5034	4	2.10596			
100000452	5034	5	2.007863			
100000452	5034	6	2.176936			
100000452	5034	7	1.68158			
100000452	5034	8	2.72589			
100000452	5034	9	1.908687			
100000452	5034	10	2.534636			
100000452	5457	1	3.372537	BUSH RIVER RD	SE	RAMP & BUSH RIVER RD
100000452	5457	2	5.094211			
100000452	5457	3	3.692718			
100000452	5457	4	3.726321			
100000452	5457	5	3.973153			
100000452	5457	6	4.072699			
100000452	5457	7	3.439464			
100000452	5457	8	4.43247			
100000452	5457	9	3.71646			
100000452	5457	10	4.476108			
100000455	5457	1	5.079129	BUSH RIVER RD	NW	FRONTAGE RD & BUSH RIVER RD
100000455	5457	2	7.247497			
100000455	5457	3	6.283124			
100000455	5457	4	6.721921			
100000455	5457	5	6.76385			
100000455	5457	6	7.019591			
100000455	5457	7	5.947371			
100000455	5457	8	7.12567			
100000455	5457	9	7.14188			
100000455	5457	10	7.260162			
100000455	6538	1	45.19915	FRONTAGE RD	SW	FRONTAGE RD & BUSH RIVER RD
100000455	6538	2	247.690515			
100000455	6538	3	94.866694			
100000455	6538	4	88.656858			
100000455	6538	5	72.203801			
100000455	6538	6	128.979644			
100000455	6538	7	66.988895			
100000455	6538	8	172.566036			
100000455	6538	9	61.736241			
100000455	6538	10	196.627784			
100000455	6539	1	12.283366	BUSH RIVER RD	SE	FRONTAGE RD & BUSH RIVER RD
100000455	6539	2	18.739893			
100000455	6539	3	13.582489			
100000455	6539	4	15.671763			
100000455	6539	5	17.977486			
100000455	6539	6	16.301062			
100000455	6539	7	13.740452			
100000455	6539	8	18.771362			
100000455	6539	9	15.776762			
100000455	6539	10	16.806449			
100000467	3225	1		RAMP	SW	RAMP & I-126 WB ON RAMP FROM GREYSTONE BLVD
100000467	3225	2				
100000467	3225	3				

Node	Superlink	Run	Average Control Delay	Approach Street Name	Direction	Intersection
100000467	3225	4				
100000467	3225	5				
100000467	3225	6				
100000467	3225	7				
100000467	3225	8				
100000467	3225	9				
100000467	3225	10				
100000467	3238	1	0	RAMP	W	RAMP & I-126 WB ON RAMP FROM GREYSTONE BLVD
100000467	3238	2	0			
100000467	3238	3	0			
100000467	3238	4	0			
100000467	3238	5	0			
100000467	3238	6	0			
100000467	3238	7	0			
100000467	3238	8	0			
100000467	3238	9	0			
100000467	3238	10	0			
100000468	3228	1	0	EXIT 103 WB ON RAMP	NW	EXIT 103 WB ON RAMP & I-26 EXIT 103 WB ON RAMP
100000468	3228	2	0			
100000468	3228	3	0			
100000468	3228	4	0			
100000468	3228	5	0			
100000468	3228	6	0			
100000468	3228	7	0			
100000468	3228	8	0			
100000468	3228	9	0			
100000468	3228	10	0			
100000468	3241	1	0	EXIT 103 WB ON RAMP	W	EXIT 103 WB ON RAMP & I-26 EXIT 103 WB ON RAMP
100000468	3241	2	0			
100000468	3241	3	0			
100000468	3241	4	0			
100000468	3241	5	0			
100000468	3241	6	0			
100000468	3241	7	0			
100000468	3241	8	0			
100000468	3241	9	0			
100000468	3241	10	0			
100000476	3257	1	0	RAMP	N	RAMP
100000476	3257	2	0			
100000476	3257	3	0			
100000476	3257	4	0			
100000476	3257	5	0			
100000476	3257	6	0			
100000476	3257	7	0			
100000476	3257	8	0			
100000476	3257	9	0			
100000476	3257	10	0			
100000476	3262	1	0	RAMP	N	RAMP
100000476	3262	2	0			
100000476	3262	3	0			
100000476	3262	4	0			
100000476	3262	5	0			
100000476	3262	6	0			
100000476	3262	7	0			
100000476	3262	8	0			
100000476	3262	9	0			
100000476	3262	10	0			
100000494	3302	1		EXIT 106 WB ON RAMP	NW	EXIT 106 WB ON RAMP & I-26 EXIT 106 WB ON RAMP
100000494	3302	2				
100000494	3302	3				
100000494	3302	4				
100000494	3302	5				
100000494	3302	6				
100000494	3302	7				
100000494	3302	8				
100000494	3302	9				
100000494	3302	10				
100000494	3306	1	0	EXIT 106 WB ON RAMP	NW	EXIT 106 WB ON RAMP & I-26 EXIT 106 WB ON RAMP
100000494	3306	2	0			
100000494	3306	3	0			
100000494	3306	4	0			
100000494	3306	5	0			
100000494	3306	6	0			
100000494	3306	7	0			
100000494	3306	8	0			
100000494	3306	9	0			
100000494	3306	10	0			
100000497	3310	1	0	RAMP	SE	RAMP & I-26 EXIT 104 EB ON RAMP
100000497	3310	2	0			
100000497	3310	3	0			
100000497	3310	4	0			
100000497	3310	5	0			
100000497	3310	6	0			
100000497	3310	7	0			
100000497	3310	8	0			
100000497	3310	9	0			
100000497	3310	10	0			
100000497	6545	1	0	RAMP	SE	RAMP & I-26 EXIT 104 EB ON RAMP
100000497	6545	2	0			
100000497	6545	3	0			
100000497	6545	4	0			
100000497	6545	5	0			
100000497	6545	6	0			
100000497	6545	7	0			
100000497	6545	8	0			
100000497	6545	9	0			
100000497	6545	10	0			
100000503	3325	1	0	RAMP	SE	RAMP
100000503	3325	2	0			
100000503	3325	3	0			
100000503	3325	4	0			
100000503	3325	5	0			
100000503	3325	6	0			
100000503	3325	7	0			
100000503	3325	8	0			
100000503	3325	9	0			
100000503	3325	10	0			
100000503	6472	1	0		E	RAMP
100000503	6472	2	0			
100000503	6472	3	0			

Node	Superlink	Run	Average Control Delay	Approach Street Name	Direction	Intersection
100000503	6472	4	0			
100000503	6472	5	0			
100000503	6472	6	0			
100000503	6472	7	0			
100000503	6472	8	0			
100000503	6472	9	0			
100000503	6472	10	0			
100000520	3345	1		EXIT 102 WB ON RAMP	N	EXIT 102 WB ON RAMP & I-26 EXIT 102 WB ON RAMP
100000520	3345	2				
100000520	3345	3				
100000520	3345	4				
100000520	3345	5				
100000520	3345	6				
100000520	3345	7				
100000520	3345	8				
100000520	3345	9				
100000520	3345	10				
100000520	3350	1	0	EXIT 102 WB ON RAMP	N	EXIT 102 WB ON RAMP & I-26 EXIT 102 WB ON RAMP
100000520	3350	2	0			
100000520	3350	3	0			
100000520	3350	4	0			
100000520	3350	5	0			
100000520	3350	6	0			
100000520	3350	7	0			
100000520	3350	8	0			
100000520	3350	9	0			
100000520	3350	10	0			
100000523	3355	1	0	ON-RAMP from WB	S	ON-RAMP from WB
100000523	3355	2	0			
100000523	3355	3	0			
100000523	3355	4	0			
100000523	3355	5	0			
100000523	3355	6	0			
100000523	3355	7	0			
100000523	3355	8	0			
100000523	3355	9	0			
100000523	3355	10	0			
100000523	3356	1	0	ON-RAMP from EB	S	ON-RAMP from WB
100000523	3356	2	0			
100000523	3356	3	0			
100000523	3356	4	0			
100000523	3356	5	0			
100000523	3356	6	0			
100000523	3356	7	0			
100000523	3356	8	0			
100000523	3356	9	0			
100000523	3356	10	0			
100000528	3360	1		EXIT 101 WB ON RAMP	N	EXIT 101 WB ON RAMP & I-26 EXIT 101 WB ON RAMP
100000528	3360	2				
100000528	3360	3				
100000528	3360	4				
100000528	3360	5				
100000528	3360	6				
100000528	3360	7				
100000528	3360	8				
100000528	3360	9				
100000528	3360	10				
100000528	3364	1	0	EXIT 101 WB ON RAMP	N	EXIT 101 WB ON RAMP & I-26 EXIT 101 WB ON RAMP
100000528	3364	2	0			
100000528	3364	3	0			
100000528	3364	4	0			
100000528	3364	5	0			
100000528	3364	6	0			
100000528	3364	7	0			
100000528	3364	8	0			
100000528	3364	9	0			
100000528	3364	10	0			
100000702	4338	1	0	RAMP	SW	RAMP & I-20 EXIT 65 WB ON RAMP
100000702	4338	2	0			
100000702	4338	3	0			
100000702	4338	4	0			
100000702	4338	5	0			
100000702	4338	6	0			
100000702	4338	7	0			
100000702	4338	8	0			
100000702	4338	9	0			
100000702	4338	10	0			
100000702	4343	1	0	RAMP	SW	RAMP & I-20 EXIT 65 WB ON RAMP
100000702	4343	2	0			
100000702	4343	3	0			
100000702	4343	4	0			
100000702	4343	5	0			
100000702	4343	6	0			
100000702	4343	7	0			
100000702	4343	8	0			
100000702	4343	9	0			
100000702	4343	10	0			
100000707	5166	1	0	MONTICELLO RD	NW	MONTICELLO RD
100000707	5166	2	0			
100000707	5166	3	0			
100000707	5166	4	0			
100000707	5166	5	0			
100000707	5166	6	0			
100000707	5166	7	0			
100000707	5166	8	0			
100000707	5166	9	0			
100000707	5166	10	0			
100000707	5168	1	0	SERVICE RD	W	MONTICELLO RD
100000707	5168	2	0			
100000707	5168	3	0			
100000707	5168	4	0			
100000707	5168	5	0			
100000707	5168	6	0			
100000707	5168	7	0			
100000707	5168	8	0			
100000707	5168	9	0			
100000707	5168	10	0			
100000707	5174	1	0.905632	MONTICELLO RD	SE	MONTICELLO RD
100000707	5174	2	0.698202			
100000707	5174	3	0.786665			

Node	Superlink	Run	Average Control Delay	Approach Street Name	Direction	Intersection
100000707	5174	4	11.248043			
100000707	5174	5	1.139638			
100000707	5174	6	0.90597			
100000707	5174	7	0.83688			
100000707	5174	8	0.516879			
100000707	5174	9	27.483822			
100000707	5174	10	1.070026			
100000709	4352	1	0	RAMP	S	RAMP & I-20 EXIT 68 WB ON RAMP
100000709	4352	2	0			
100000709	4352	3	0			
100000709	4352	4	0			
100000709	4352	5	0			
100000709	4352	6	0			
100000709	4352	7	0			
100000709	4352	8	0			
100000709	4352	9	0			
100000709	4352	10	0			
100000709	4353	1	0	RAMP	S	RAMP & I-20 EXIT 68 WB ON RAMP
100000709	4353	2	0			
100000709	4353	3	0			
100000709	4353	4	0			
100000709	4353	5	0			
100000709	4353	6	0			
100000709	4353	7	0			
100000709	4353	8	0			
100000709	4353	9	0			
100000709	4353	10	0			
100000710	4356	1	0	I-20 EXIT 68 WB OFF RAMP	W	I-20 EXIT 68 WB OFF RAMP & SERVICE RD
100000710	4356	2	0			
100000710	4356	3	0			
100000710	4356	4	0			
100000710	4356	5	0			
100000710	4356	6	0			
100000710	4356	7	0			
100000710	4356	8	0			
100000710	4356	9	0			
100000710	4356	10	0			
100000712	5157	1	0.10822	BUCKNER RD	NE	BUCKNER RD & RAMP
100000712	5157	2	0.088155			
100000712	5157	3	0.080322			
100000712	5157	4	0.068104			
100000712	5157	5	0.094556			
100000712	5157	6	0.146787			
100000712	5157	7	0.095871			
100000712	5157	8	0.090109			
100000712	5157	9	0.084658			
100000712	5157	10	0.107585			
100000712	5160	1	24.59739	BUCKNER RD	SW	BUCKNER RD & RAMP
100000712	5160	2	28.446495			
100000712	5160	3	19.683651			
100000712	5160	4	24.391218			
100000712	5160	5	21.743791			
100000712	5160	6	17.032467			
100000712	5160	7	20.279879			
100000712	5160	8	25.211003			
100000712	5160	9	14.745185			
100000712	5160	10	24.169044			
100000804	6261	1	31.664698	TRAM RD	SW	TRAM RD & SIDNEY RD
100000804	6261	2	23.481655			
100000804	6261	3	26.139741			
100000804	6261	4	17.075293			
100000804	6261	5	24.837765			
100000804	6261	6	23.38164			
100000804	6261	7	21.018648			
100000804	6261	8	22.779265			
100000804	6261	9	25.252236			
100000804	6261	10	27.740849			
100000804	6457	1	207.285132	SIDNEY RD	NW	TRAM RD & SIDNEY RD
100000804	6457	2	191.47118			
100000804	6457	3	212.606077			
100000804	6457	4	195.819537			
100000804	6457	5	212.535486			
100000804	6457	6	220.551379			
100000804	6457	7	196.764471			
100000804	6457	8	187.099704			
100000804	6457	9	191.283198			
100000804	6457	10	184.301648			
100000804	6458	1	2.516789	TRAM RD	NE	TRAM RD & SIDNEY RD
100000804	6458	2	2.404744			
100000804	6458	3	2.182006			
100000804	6458	4	2.510646			
100000804	6458	5	2.305821			
100000804	6458	6	2.78574			
100000804	6458	7	2.10902			
100000804	6458	8	2.97052			
100000804	6458	9	2.083703			
100000804	6458	10	2.899765			
100000882	5151	1		SERVICE RD	SW	SERVICE RD
100000882	5151	2				
100000882	5151	3				
100000882	5151	4				
100000882	5151	5				
100000882	5151	6				
100000882	5151	7				
100000882	5151	8				
100000882	5151	9				
100000882	5151	10				
100000882	6446	1	0	SERVICE RD	NE	SERVICE RD
100000882	6446	2	0			
100000882	6446	3	0			
100000882	6446	4	0			
100000882	6446	5	0			
100000882	6446	6	0			
100000882	6446	7	0			
100000882	6446	8	0			
100000882	6446	9	0			
100000882	6446	10	0			
100000882	6449	1	0		N	SERVICE RD
100000882	6449	2	0			
100000882	6449	3	0			

Node	Superlink	Run	Average Control Delay	Approach Street Name	Direction	Intersection
100000882	6449	4	0			
100000882	6449	5	0			
100000882	6449	6	0			
100000882	6449	7	0			
100000882	6449	8	0			
100000882	6449	9	0			
100000882	6449	10	0			
100000883	5148	1	0	BROAD RIVER RD	NW	BROAD RIVER RD & 6448 (E)
100000883	5148	2	0			
100000883	5148	3	0			
100000883	5148	4	0			
100000883	5148	5	0			
100000883	5148	6	0			
100000883	5148	7	0			
100000883	5148	8	0			
100000883	5148	9	0			
100000883	5148	10	0			
100000883	6447	1	13.817525	BROAD RIVER RD	SE	BROAD RIVER RD & 6448 (E)
100000883	6447	2	10.994233			
100000883	6447	3	11.635456			
100000883	6447	4	11.566972			
100000883	6447	5	10.115116			
100000883	6447	6	10.335562			
100000883	6447	7	11.645096			
100000883	6447	8	10.757999			
100000883	6447	9	12.169327			
100000883	6447	10	13.127321			
100000883	6448	1			W	BROAD RIVER RD & 6448 (E)
100000883	6448	2				
100000883	6448	3				
100000883	6448	4				
100000883	6448	5				
100000883	6448	6				
100000883	6448	7				
100000883	6448	8				
100000883	6448	9				
100000883	6448	10				
100000895	3229	1	0	RAMP	SW	RAMP & PINEY GROVE RD
100000895	3229	2	0			
100000895	3229	3	0			
100000895	3229	4	0			
100000895	3229	5	0			
100000895	3229	6	0			
100000895	3229	7	0			
100000895	3229	8	0			
100000895	3229	9	0			
100000895	3229	10	0			
100000895	6543	1	1.450795	PINEY GROVE RD	E	RAMP & PINEY GROVE RD
100000895	6543	2	1.294592			
100000895	6543	3	3.102652			
100000895	6543	4	1.16057			
100000895	6543	5	1.368026			
100000895	6543	6	1.045703			
100000895	6543	7	1.889899			
100000895	6543	8	1.587722			
100000895	6543	9	2.392015			
100000895	6543	10	1.610208			
100000895	6544	1	0	PINEY GROVE RD	W	RAMP & PINEY GROVE RD
100000895	6544	2	0			
100000895	6544	3	0			
100000895	6544	4	0			
100000895	6544	5	0			
100000895	6544	6	0			
100000895	6544	7	0			
100000895	6544	8	0			
100000895	6544	9	0			
100000895	6544	10	0			
100000897	3243	1	57.562346	I-126 WB OFF RAMP TO COLONIAL LIFE BLVD	NE	I-126 WB OFF RAMP TO COLONIAL LIFE BLVD
100000897	3243	2	10.958618			
100000897	3243	3	11.346828			
100000897	3243	4	7.56413			
100000897	3243	5	13.348506			
100000897	3243	6	9.398101			
100000897	3243	7	7.622641			
100000897	3243	8	7.38807			
100000897	3243	9	8.610205			
100000897	3243	10	8.135712			
100000897	5134	1	22.227255	W COLONIAL LIFE BLVD	NW	I-126 WB OFF RAMP TO COLONIAL LIFE BLVD
100000897	5134	2	16.734145			
100000897	5134	3	20.233708			
100000897	5134	4	21.79662			
100000897	5134	5	14.892465			
100000897	5134	6	23.699312			
100000897	5134	7	13.486766			
100000897	5134	8	20.008261			
100000897	5134	9	20.310352			
100000897	5134	10	20.499753			
100000897	6471	1	0.584407	COLONIAL LIFE BLVD W	S	I-126 WB OFF RAMP TO COLONIAL LIFE BLVD
100000897	6471	2	0.640621			
100000897	6471	3	0.589303			
100000897	6471	4	0.546156			
100000897	6471	5	0.681012			
100000897	6471	6	0.680468			
100000897	6471	7	0.651548			
100000897	6471	8	0.622579			
100000897	6471	9	0.718296			
100000897	6471	10	0.634658			
100000898	51	1	322.43353	I-26 EXIT 108 EB OFF RAMP	S	I-26 EXIT 108 EB OFF RAMP
100000898	51	2	354.862269			
100000898	51	3	350.535678			
100000898	51	4	346.672771			
100000898	51	5	376.147074			
100000898	51	6	361.209285			
100000898	51	7	354.181233			
100000898	51	8	364.081226			
100000898	51	9	345.531465			
100000898	51	10	361.12912			
100000898	5130	1	18.705866	BUSH RIVER RD	N	I-26 EXIT 108 EB OFF RAMP
100000898	5130	2	27.065549			
100000898	5130	3	13.748289			

Node	Superlink	Run	Average Control Delay	Approach Street Name	Direction	Intersection
100000898	5130	4	22.952099			
100000898	5130	5	21.404221			
100000898	5130	6	28.343792			
100000898	5130	7	21.379501			
100000898	5130	8	19.851998			
100000898	5130	9	22.111015			
100000898	5130	10	15.797713			
100000898	5131	1	11.164547	BUSH RIVER RD	E	I-26 EXIT 108 EB OFF RAMP
100000898	5131	2	10.093918			
100000898	5131	3	9.192162			
100000898	5131	4	10.786933			
100000898	5131	5	10.058142			
100000898	5131	6	9.584679			
100000898	5131	7	9.83814			
100000898	5131	8	12.009979			
100000898	5131	9	10.120175			
100000898	5131	10	11.411622			
100000898	6503	1	10.973463	BUSH RIVER RD	W	I-26 EXIT 108 EB OFF RAMP
100000898	6503	2	10.62478			
100000898	6503	3	11.101499			
100000898	6503	4	12.015276			
100000898	6503	5	10.678812			
100000898	6503	6	10.704259			
100000898	6503	7	8.353646			
100000898	6503	8	11.662153			
100000898	6503	9	8.686266			
100000898	6503	10	11.475189			
100000899	3298	1	6.006059	EXIT 106 WB OFF RAMP	SE	EXIT 106 WB OFF RAMP & BURNING TREE RD
100000899	3298	2	7.113311			
100000899	3298	3	7.393846			
100000899	3298	4	7.09182			
100000899	3298	5	6.46958			
100000899	3298	6	6.763808			
100000899	3298	7	6.676113			
100000899	3298	8	6.243328			
100000899	3298	9	6.098482			
100000899	3298	10	9.416907			
100000899	6105	1	0	BURNING TREE RD	S	EXIT 106 WB OFF RAMP & BURNING TREE RD
100000899	6105	2	0			
100000899	6105	3	0			
100000899	6105	4	0			
100000899	6105	5	0			
100000899	6105	6	0			
100000899	6105	7	0			
100000899	6105	8	0			
100000899	6105	9	0			
100000899	6105	10	0			
100000899	6106	1	0	BURNING TREE RD	N	EXIT 106 WB OFF RAMP & BURNING TREE RD
100000899	6106	2	0			
100000899	6106	3	0			
100000899	6106	4	0			
100000899	6106	5	0			
100000899	6106	6	0			
100000899	6106	7	0			
100000899	6106	8	0			
100000899	6106	9	0			
100000899	6106	10	0			
100000902	4292	1	44.92715	EXIT 110 WB OFF RAMP	NE	SUNSET BLVD
100000902	4292	2	43.639585			
100000902	4292	3	40.651439			
100000902	4292	4	39.529634			
100000902	4292	5	48.75092			
100000902	4292	6	37.283218			
100000902	4292	7	41.045528			
100000902	4292	8	36.803598			
100000902	4292	9	40.514594			
100000902	4292	10	49.294735			
100000902	4947	1	29.467555	SUNSET BLVD	W	SUNSET BLVD
100000902	4947	2	30.129202			
100000902	4947	3	23.2908			
100000902	4947	4	22.996428			
100000902	4947	5	23.588285			
100000902	4947	6	18.387106			
100000902	4947	7	16.952191			
100000902	4947	8	20.385101			
100000902	4947	9	16.981181			
100000902	4947	10	22.42159			
100000902	4951	1	0.000042	SUNSET BLVD	E	SUNSET BLVD
100000902	4951	2	0.000037			
100000902	4951	3	0			
100000902	4951	4	0			
100000902	4951	5	0.000006			
100000902	4951	6	0.000173			
100000902	4951	7	0			
100000902	4951	8	0			
100000902	4951	9	0			
100000902	4951	10	0			
100000903	4289	1	102.665189	EXIT 110 WB OFF RAMP	NW	RAMP
100000903	4289	2	108.743175			
100000903	4289	3	56.223201			
100000903	4289	4	95.001019			
100000903	4289	5	73.590693			
100000903	4289	6	65.350929			
100000903	4289	7	79.401566			
100000903	4289	8	102.545784			
100000903	4289	9	58.57237			
100000903	4289	10	99.984505			
100000903	4298	1	35.472863	RAMP	SE	RAMP
100000903	4298	2	41.245694			
100000903	4298	3	40.43098			
100000903	4298	4	37.268113			
100000903	4298	5	36.24398			
100000903	4298	6	40.016216			
100000903	4298	7	40.891028			
100000903	4298	8	35.667015			
100000903	4298	9	43.038207			
100000903	4298	10	42.792026			
100000903	4950	1	18.694823	SUNSET BLVD	E	RAMP
100000903	4950	2	19.057476			
100000903	4950	3	19.687989			

Node	Superlink	Run	Average Control Delay	Approach Street Name	Direction	Intersection
100000903	4950	4	18.082875			
100000903	4950	5	19.461176			
100000903	4950	6	18.774159			
100000903	4950	7	17.84949			
100000903	4950	8	19.049793			
100000903	4950	9	18.78224			
100000903	4950	10	18.458117			
100000903	4951	1	21.402815	SUNSET BLVD	W	RAMP
100000903	4951	2	20.389711			
100000903	4951	3	20.355449			
100000903	4951	4	20.922143			
100000903	4951	5	20.607361			
100000903	4951	6	18.868492			
100000903	4951	7	18.968706			
100000903	4951	8	19.78062			
100000903	4951	9	18.596535			
100000903	4951	10	19.828384			

2040 Build RRPA AM

Node	Superlink	Run	Average Control Delay	Approach Street Name	Direction	Intersection
4	5081	1	10.751828	BROAD RIVER RD	W	WESTERN LN & BROAD RIVER RD
4	5081	2	10.473705			
4	5081	3	11.7			
4	5081	4	12.1			
4	5081	5	11.6			
4	5081	6	12.763148			
4	5081	7	16.555213			
4	5081	8	11.9			
4	5081	9	12.2			
4	5081	10	11.6			
4	6465	1	14.054109	WESTERN LN	S	WESTERN LN & BROAD RIVER RD
4	6465	2	16.00095			
4	6465	3	15.4			
4	6465	4	14.9			
4	6465	5	17.135787			
4	6465	6	13.562748			
4	6465	7	25.1			
4	6465	8	16.7			
4	6465	9	15.3			
4	6465	10	14.215715			
4	6466	1	5.428166	BROAD RIVER RD	E	WESTERN LN & BROAD RIVER RD
4	6466	2	5.8			
4	6466	3	6.0			
4	6466	4	5.277223			
4	6466	5	6.849691			
4	6466	6	6.6			
4	6466	7	60.0			
4	6466	8	6.068344			
4	6466	9	6.440051			
4	6466	10	6.0			
4	6467	1	6.7	WESTERN LN	N	WESTERN LN & BROAD RIVER RD
4	6467	2	7.9			
4	6467	3	7.490676			
4	6467	4	7.062988			
4	6467	5	7.9			
4	6467	6	7.0			
4	6467	7	23.8			
4	6467	8	7.100665			
4	6467	9	7.782463			
4	6467	10	7.7			
40	6624	1	68.9	I-26 EB EXIT 106 OFF RAMP	E	I-26 EB EXIT 106 OFF RAMP, ST ANDREWS RD, I-26 WB TO BURNING TREE RD AND TO ST ANDREWS RD OFF RAMP,
40	6624	2	75.359432			
40	6624	3	103.289243			
40	6624	4	91.1			
40	6624	5	71.9			
40	6624	6	73.7			
40	6624	7	98.911205			
40	6624	8	60.38906			
40	6624	9	83.0			
40	6624	10	68.4			
40	6734	1	43.862551	ST ANDREWS RD	E	I-26 EB EXIT 106 OFF RAMP, ST ANDREWS RD, I-26 WB TO BURNING TREE RD AND TO ST ANDREWS RD OFF RAMP,
40	6734	2	45.979879			
40	6734	3	41.0			
40	6734	4	45.4			
40	6734	5	47.7			
40	6734	6	49.497935			
40	6734	7	48.10126			
40	6734	8	43.6			
40	6734	9	41.9			
40	6734	10	43.419391			
40	6737	1	41.311001	ST ANDREWS RD	W	I-26 EB EXIT 106 OFF RAMP, ST ANDREWS RD, I-26 WB TO BURNING TREE RD AND TO ST ANDREWS RD OFF RAMP,
40	6737	2	38.6			
40	6737	3	41.9			
40	6737	4	38.2			
40	6737	5	37.7			
40	6737	6	36.411711			
40	6737	7	35.273243			
40	6737	8	41.4			
40	6737	9	40.2			
40	6737	10	40.5			
40	6775	1	35.999055	I-26 WB TO BURNING TREE RD AND TO ST AND	W	I-26 EB EXIT 106 OFF RAMP, ST ANDREWS RD, I-26 WB TO BURNING TREE RD AND TO ST ANDREWS RD OFF RAMP,
40	6775	2	37.10658			
40	6775	3	36.4			
40	6775	4	38.5			
40	6775	5	35.7			
40	6775	6	36.062087			
40	6775	7	36.22123			
40	6775	8	36.4			
40	6775	9	34.6			
40	6775	10	35.3			
52	6750	1	6.341453	BUSH RIVER RD	E	BUSH RIVER RD, 6778 (SE) & 6777 (E)
52	6750	2	5.836687			
52	6750	3	5.7			
52	6750	4	6.0			
52	6750	5	5.7			
52	6750	6	6.231889			
52	6750	7	5.821507			
52	6750	8	6.3			
52	6750	9	6.1			
52	6750	10	6.2			
52	6778	1	18.937764		NW	BUSH RIVER RD, 6778 (SE) & 6777 (E)
52	6778	2	18.146943			
52	6778	3	18.9			
52	6778	4	19.8			
52	6778	5	21.6			
52	6778	6	18.179873			
52	6778	7	18.529037			
52	6778	8	18.3			
52	6778	9	18.4			
52	6778	10	19.7			
54	6057	1	14.442412	BROAD RIVER RD	SE	EXIT 65 RAMP TO US 176, BROAD RIVER RD & RAMP
54	6057	2	10.273508			
54	6057	3	17.9			
54	6057	4	16.012644			
54	6057	5	14.097442			
54	6057	6	2.3			
54	6057	7	19.3			
54	6057	8	3.008384			
54	6057	9	13.602387			
54	6057	10	14.0			
54	6575	1	20.4	EXIT 65 RAMP TO US 176	W	EXIT 65 RAMP TO US 176, BROAD RIVER RD & RAMP
54	6575	2	17.883997			
54	6575	3	19.42466			
54	6575	4	19.1			
54	6575	5	17.4			

Node	Superlink	Run	Average Control Delay	Approach Street Name	Direction	Intersection
54	6575	6	17.6			
54	6575	7	19.559959			
54	6575	8	18.093695			
54	6575	9	20.1			
54	6575	10	19.7			
54	6580	1	0	BROAD RIVER RD	NW	EXIT 65 RAMP TO US 176, BROAD RIVER RD & RAMP
54	6580	2	0			
54	6580	3	0.0			
54	6580	4	0.0			
54	6580	5	0.0			
54	6580	6	0			
54	6580	7	0			
54	6580	8	0.0			
54	6580	9	0.0			
54	6580	10	0.0			
65	2067	1	0	RAMP	N	6564 (W) & RAMP
65	2067	2	0			
65	2067	3	0.0			
65	2067	4	0.0			
65	2067	5	0.0			
65	2067	6	0			
65	2067	7	0			
65	2067	8	0.0			
65	2067	9	0.0			
65	2067	10	0.0			
65	6564	1	0		NE	6564 (W) & RAMP
65	6564	2	0			
65	6564	3	0.0			
65	6564	4	0.0			
65	6564	5	0.0			
65	6564	6	0			
65	6564	7	0			
65	6564	8	0.0			
65	6564	9	0.0			
65	6564	10	0			
71	6659	1	15.327751	PINEY GROVE RD	E	PINEY GROVE RD, I-26 EB EXIT 104 OFF RAMP & I-26 EB EXIT 104 ON RAMP
71	6659	2	15.1			
71	6659	3	11.7			
71	6659	4	12.2			
71	6659	5	13.564767			
71	6659	6	12.824579			
71	6659	7	13.5			
71	6659	8	12.4			
71	6659	9	12.143539			
71	6659	10	12.11232			
71	6660	1	0.0	PINEY GROVE RD	W	PINEY GROVE RD, I-26 EB EXIT 104 OFF RAMP & I-26 EB EXIT 104 ON RAMP
71	6660	2	0.0			
71	6660	3	0.001727			
71	6660	4	0.000001			
71	6660	5	0.0			
71	6660	6	0.00339			
71	6660	7	0.001755			
71	6660	8	0.0			
71	6660	9	0.0			
71	6660	10	0.000001			
74	6579	1	0		NE	6579 (SW), 6581 (W) & RAMP
74	6579	2	0.0			
74	6579	3	0.0			
74	6579	4	0.0			
74	6579	5	0			
74	6579	6	0			
74	6579	7	0.0			
74	6579	8	0.0			
74	6579	9	0			
74	6579	10	0			
74	6581	1	0.0		NE	6579 (SW), 6581 (W) & RAMP
74	6581	2	0.0			
74	6581	3	0			
74	6581	4	0			
74	6581	5	0.0			
74	6581	6	0.0			
74	6581	7	0.0			
74	6581	8	0			
74	6581	9	0			
74	6581	10	0			
79	5148	1	48.4	BROAD RIVER RD	NW	6584 (NE), BROAD RIVER RD, 6583 (SW), 6587 (W) & 6581 (E)
79	5148	2	42.8			
79	5148	3	46.249418			
79	5148	4	45.385555			
79	5148	5	46.4			
79	5148	6	43.7			
79	5148	7	44.7			
79	5148	8	43.027204			
79	5148	9	47.295571			
79	5148	10	46.9			
79	6580	1	39.8	BROAD RIVER RD	SE	6584 (NE), BROAD RIVER RD, 6583 (SW), 6587 (W) & 6581 (E)
79	6580	2	39.3			
79	6580	3	37.61442			
79	6580	4	39.362087			
79	6580	5	39.140289			
79	6580	6	38.045225			
79	6580	7	38.975072			
79	6580	8	35.164399			
79	6580	9	39.159667			
79	6580	10	38.795047			
79	6583	1	45.66464		N	6584 (NE), BROAD RIVER RD, 6583 (SW), 6587 (W) & 6581 (E)
79	6583	2	49.476195			
79	6583	3	49.491965			
79	6583	4	52.419542			
79	6583	5	52.38415			
79	6583	6	47.114419			
79	6583	7	47.15198			
79	6583	8	50.19763			
79	6583	9	46.590462			
79	6583	10	50.678736			
79	6584	1	52.754766		S	6584 (NE), BROAD RIVER RD, 6583 (SW), 6587 (W) & 6581 (E)
79	6584	2	53.563835			
79	6584	3	56.471021			
79	6584	4	53.748393			
79	6584	5	53.485205			
79	6584	6	53.701415			
79	6584	7	51.431599			
79	6584	8	51.602627			
79	6584	9	52.875443			
79	6584	10	55.211271			

Node	Superlink	Run	Average Control Delay	Approach Street Name	Direction	Intersection
85	6627	1	0	I-26 WB EXIT 106 ON RAMP	N	I-26 WB EXIT 106 ON RAMP
85	6627	2	0			
85	6627	3	0			
85	6627	4	0			
85	6627	5	0			
85	6627	6	0			
85	6627	7	0			
85	6627	8	0			
85	6627	9	0			
85	6627	10	0			
85	6652	1	0	I-26 WB EXIT 106 ON RAMP	NW	I-26 WB EXIT 106 ON RAMP
85	6652	2	0			
85	6652	3	0			
85	6652	4	0			
85	6652	5	0			
85	6652	6	0			
85	6652	7	0			
85	6652	8	0			
85	6652	9	0			
85	6652	10	0			
99	6647	1	49.579583	I-26 WB EXIT 103 OFF RAMP	NW	I-26 WB EXIT 103 OFF RAMP, HARBISON BLVD, I-26 WB EXIT 103 ON RAMP & 6770 (SW)
99	6647	2	82.995437			
99	6647	3	76.670561			
99	6647	4	49.581898			
99	6647	5	52.985469			
99	6647	6	74.9046			
99	6647	7	73.13266			
99	6647	8	45.788927			
99	6647	9	92.011793			
99	6647	10	56.57083			
99	6719	1	5.640947	HARBISON BLVD	SW	I-26 WB EXIT 103 OFF RAMP, HARBISON BLVD, I-26 WB EXIT 103 ON RAMP & 6770 (SW)
99	6719	2	5.28849			
99	6719	3	5.445526			
99	6719	4	5.763116			
99	6719	5	5.144008			
99	6719	6	5.926885			
99	6719	7	7.076036			
99	6719	8	6.501634			
99	6719	9	6.149883			
99	6719	10	5.635486			
99	6770	1	6.269325		NE	I-26 WB EXIT 103 OFF RAMP, HARBISON BLVD, I-26 WB EXIT 103 ON RAMP & 6770 (SW)
99	6770	2	5.038628			
99	6770	3	5.022198			
99	6770	4	4.828575			
99	6770	5	5.552713			
99	6770	6	4.669901			
99	6770	7	5.507994			
99	6770	8	6.304823			
99	6770	9	4.967972			
99	6770	10	5.773759			
104	3211	1	32.815392	I-26 EB EXIT 103 OFF RAMP	SE	HARBISON BLVD, I-26 EB EXIT 103 OFF RAMP, 6770 (NE) & I-26 EB EXIT 103 ON RAMP
104	3211	2	33.942265			
104	3211	3	33.97542			
104	3211	4	34.757179			
104	3211	5	30.743021			
104	3211	6	42.828935			
104	3211	7	37.510106			
104	3211	8	31.943129			
104	3211	9	43.926194			
104	3211	10	32.924804			
104	6717	1	2.24551	HARBISON BLVD	NE	HARBISON BLVD, I-26 EB EXIT 103 OFF RAMP, 6770 (NE) & I-26 EB EXIT 103 ON RAMP
104	6717	2	2.243254			
104	6717	3	2.700968			
104	6717	4	2.340167			
104	6717	5	2.118759			
104	6717	6	2.201057			
104	6717	7	2.009684			
104	6717	8	2.395708			
104	6717	9	1.700781			
104	6717	10	2.491306			
104	6770	1	5.297499		SW	HARBISON BLVD, I-26 EB EXIT 103 OFF RAMP, 6770 (NE) & I-26 EB EXIT 103 ON RAMP
104	6770	2	6.597077			
104	6770	3	6.611969			
104	6770	4	5.938748			
104	6770	5	6.69752			
104	6770	6	6.996827			
104	6770	7	7.400456			
104	6770	8	6.662451			
104	6770	9	7.2562			
104	6770	10	6.908788			
107	3243	1	20.507469	RAMP	NW	RAMP, COLONIAL LIFE BLVD W & 6681 (NW)
107	3243	2	19.550779			
107	3243	3	19.77235			
107	3243	4	18.781901			
107	3243	5	19.711512			
107	3243	6	20.281322			
107	3243	7	18.665037			
107	3243	8	20.279676			
107	3243	9	19.930943			
107	3243	10	20.035746			
107	6545	1	7.631191	COLONIAL LIFE BLVD W	SW	RAMP, COLONIAL LIFE BLVD W & 6681 (NW)
107	6545	2	7.467574			
107	6545	3	7.432978			
107	6545	4	7.180939			
107	6545	5	6.936827			
107	6545	6	6.896749			
107	6545	7	5.741143			
107	6545	8	6.949301			
107	6545	9	6.028132			
107	6545	10	8.485578			
107	6678	1	1.190609	COLONIAL LIFE BLVD W	NE	RAMP, COLONIAL LIFE BLVD W & 6681 (NW)
107	6678	2	0			
107	6678	3	0.288642			
107	6678	4	0.938316			
107	6678	5	0.73149			
107	6678	6	0.624067			
107	6678	7	0.04355			
107	6678	8	0.117238			
107	6678	9	0			
107	6678	10	0.477353			
108	6676	1	23.476395		SE	COLONIAL LIFE BLVD W, 6676 (NW) & 6688 (SE)
108	6676	2	27.670918			
108	6676	3	23.884396			
108	6676	4	23.324149			
108	6676	5	22.975252			

Node	Superlink	Run	Average Control Delay	Approach Street Name	Direction	Intersection
108	6676	6	24.180862			
108	6676	7	24.689336			
108	6676	8	26.832148			
108	6676	9	27.720859			
108	6676	10	24.330639			
108	6678	1	18.598024	COLONIAL LIFE BLVD W	SW	COLONIAL LIFE BLVD W, 6676 (NW) & 6688 (SE)
108	6678	2	14.915394			
108	6678	3	16.834			
108	6678	4	18.945984			
108	6678	5	20.102665			
108	6678	6	18.375573			
108	6678	7	17.334446			
108	6678	8	17.343329			
108	6678	9	15.733914			
108	6678	10	14.757709			
118	2071	1	18.184549	RAMP	W	BUSH RIVER RD & RAMP
118	2071	2	14.407549			
118	2071	3	14.003613			
118	2071	4	14.601617			
118	2071	5	14.576593			
118	2071	6	13.053622			
118	2071	7	12.939823			
118	2071	8	15.386448			
118	2071	9	16.528632			
118	2071	10	15.986366			
118	6750	1	0	BUSH RIVER RD	NW	BUSH RIVER RD & RAMP
118	6750	2	0			
118	6750	3	0			
118	6750	4	0			
118	6750	5	0			
118	6750	6	0			
118	6750	7	0			
118	6750	8	0			
118	6750	9	0			
118	6750	10	0			
118	6780	1	6.810519	BUSH RIVER RD	SE	BUSH RIVER RD & RAMP
118	6780	2	5.794101			
118	6780	3	5.048872			
118	6780	4	5.532797			
118	6780	5	6.039464			
118	6780	6	4.941737			
118	6780	7	6.271127			
118	6780	8	6.607386			
118	6780	9	6.035893			
118	6780	10	6.147193			
120	6740	1	11.38978	BUSH RIVER RD	W	BUSH RIVER RD & 6741 (NE)
120	6740	2	9.792281			
120	6740	3	10.025768			
120	6740	4	9.261125			
120	6740	5	9.004091			
120	6740	6	11.037061			
120	6740	7	10.233378			
120	6740	8	9.198602			
120	6740	9	8.949563			
120	6740	10	9.452964			
120	6741	1	20.408896		SW	BUSH RIVER RD & 6741 (NE)
120	6741	2	23.773891			
120	6741	3	23.09978			
120	6741	4	24.72125			
120	6741	5	24.192717			
120	6741	6	23.722539			
120	6741	7	23.232765			
120	6741	8	23.763573			
120	6741	9	21.75697			
120	6741	10	23.21395			
120	6781	1	7.523693	BUSH RIVER RD	E	BUSH RIVER RD & 6741 (NE)
120	6781	2	5.793783			
120	6781	3	7.00046			
120	6781	4	6.064398			
120	6781	5	6.731577			
120	6781	6	6.474149			
120	6781	7	6.817093			
120	6781	8	6.204318			
120	6781	9	7.116846			
120	6781	10	6.320627			
123	3328	1	0	I-26 EB EXIT 103 ON RAMP	SE	I-26 EB EXIT 103 ON RAMP & 6718 (W)
123	3328	2	0			
123	3328	3	0			
123	3328	4	0			
123	3328	5	0			
123	3328	6	0			
123	3328	7	0			
123	3328	8	0			
123	3328	9	0			
123	3328	10	0			
127	5116	1	46.736964	ST ANDREWS RD	E	WOODLAND HILLS RD, ST ANDREWS RD, I-26 EB EXIT 106 OFF RAMP & 6772 (NE)
127	5116	2	40.87706			
127	5116	3	40.197431			
127	5116	4	41.715214			
127	5116	5	42.362831			
127	5116	6	42.137686			
127	5116	7	39.910235			
127	5116	8	45.901001			
127	5116	9	40.929678			
127	5116	10	37.580195			
127	5119	1	23.971734	WOODLAND HILLS RD	N	WOODLAND HILLS RD, ST ANDREWS RD, I-26 EB EXIT 106 OFF RAMP & 6772 (NE)
127	5119	2	23.348319			
127	5119	3	20.645818			
127	5119	4	22.71352			
127	5119	5	18.432416			
127	5119	6	22.09399			
127	5119	7	20.94491			
127	5119	8	18.976987			
127	5119	9	26.414843			
127	5119	10	21.148386			
127	6736	1	6.562945	ST ANDREWS RD	W	WOODLAND HILLS RD, ST ANDREWS RD, I-26 EB EXIT 106 OFF RAMP & 6772 (NE)
127	6736	2	4.936298			
127	6736	3	5.508131			
127	6736	4	5.581893			
127	6736	5	5.301011			
127	6736	6	5.903603			
127	6736	7	5.13327			
127	6736	8	5.330806			
127	6736	9	5.033819			
127	6736	10	6.011406			

Node	Superlink	Run	Average Control Delay	Approach Street Name	Direction	Intersection
127	6773	1	13.627615	I-26 EB EXIT 106 OFF RAMP	S	WOODLAND HILLS RD, ST ANDREWS RD, I-26 EB EXIT 106 OFF RAMP & 6772 (NE)
127	6773	2	12.82446			
127	6773	3	16.678034			
127	6773	4	14.828318			
127	6773	5	18.461734			
127	6773	6	12.556092			
127	6773	7	15.186648			
127	6773	8	13.371729			
127	6773	9	15.593644			
127	6773	10	15.836098			
134	6563	1	28.352169		S	6563 (N), 6777 (W) & BUSH RIVER RD
134	6563	2	26.896892			
134	6563	3	26.859345			
134	6563	4	27.763117			
134	6563	5	28.223603			
134	6563	6	27.594667			
134	6563	7	29.822634			
134	6563	8	25.563374			
134	6563	9	26.986904			
134	6563	10	27.959949			
134	6777	1	0		E	6563 (N), 6777 (W) & BUSH RIVER RD
134	6777	2	0			
134	6777	3	0			
134	6777	4	0			
134	6777	5	0			
134	6777	6	0			
134	6777	7	0			
134	6777	8	0			
134	6777	9	0			
134	6777	10	0			
136	6555	1	13.758972	EXIT 63 RAMP TO BUSH RIVER RD	E	EXIT 63 RAMP TO BUSH RIVER RD, BUSH RIVER RD & RAMP
136	6555	2	14.294913			
136	6555	3	12.696623			
136	6555	4	13.859355			
136	6555	5	15.143112			
136	6555	6	13.601875			
136	6555	7	13.948907			
136	6555	8	13.738076			
136	6555	9	14.047617			
136	6555	10	13.476373			
136	6739	1	0	BUSH RIVER RD	SE	EXIT 63 RAMP TO BUSH RIVER RD, BUSH RIVER RD & RAMP
136	6739	2	0			
136	6739	3	0			
136	6739	4	0			
136	6739	5	0			
136	6739	6	0			
136	6739	7	0			
136	6739	8	0			
136	6739	9	0			
136	6739	10	0			
136	6781	1	1.840232	BUSH RIVER RD	NW	EXIT 63 RAMP TO BUSH RIVER RD, BUSH RIVER RD & RAMP
136	6781	2	1.784602			
136	6781	3	1.181676			
136	6781	4	1.692773			
136	6781	5	1.733969			
136	6781	6	1.646989			
136	6781	7	1.713503			
136	6781	8	1.761367			
136	6781	9	1.692119			
136	6781	10	1.879201			
141	6751	1	18.15457		NE	BUSH RIVER RD, 6752 (NE) & 6751 (SW)
141	6751	2	17.561423			
141	6751	3	26.602966			
141	6751	4	21.862374			
141	6751	5	18.944604			
141	6751	6	18.228245			
141	6751	7	18.460892			
141	6751	8	25.130278			
141	6751	9	21.166885			
141	6751	10	21.942651			
141	6752	1	22.804365		SW	BUSH RIVER RD, 6752 (NE) & 6751 (SW)
141	6752	2	27.274729			
141	6752	3	24.81549			
141	6752	4	23.011375			
141	6752	5	23.401116			
141	6752	6	23.996359			
141	6752	7	31.479995			
141	6752	8	25.073563			
141	6752	9	23.078638			
141	6752	10	25.320289			
141	6753	1	103.797274	BUSH RIVER RD	SE	BUSH RIVER RD, 6752 (NE) & 6751 (SW)
141	6753	2	96.725341			
141	6753	3	106.874048			
141	6753	4	105.64221			
141	6753	5	95.837962			
141	6753	6	75.115115			
141	6753	7	76.288135			
141	6753	8	110.073582			
141	6753	9	92.940537			
141	6753	10	76.377411			
141	6780	1	18.809462	BUSH RIVER RD	NW	BUSH RIVER RD, 6752 (NE) & 6751 (SW)
141	6780	2	14.199983			
141	6780	3	12.864337			
141	6780	4	15.28653			
141	6780	5	12.723108			
141	6780	6	13.425441			
141	6780	7	12.861743			
141	6780	8	16.631307			
141	6780	9	16.214488			
141	6780	10	14.968457			
150	6565	1	29.679472	BUSH RIVER RD	SE	BUSH RIVER RD & 6782 (W)
150	6565	2	29.058065			
150	6565	3	30.313137			
150	6565	4	29.821113			
150	6565	5	29.362124			
150	6565	6	31.048603			
150	6565	7	31.542224			
150	6565	8	29.179448			
150	6565	9	29.027465			
150	6565	10	29.620642			
150	6739	1	6.670881	BUSH RIVER RD	W	BUSH RIVER RD & 6782 (W)
150	6739	2	5.835447			
150	6739	3	4.888911			
150	6739	4	6.972985			
150	6739	5	7.216551			

Node	Superlink	Run	Average Control Delay	Approach Street Name	Direction	Intersection
150	6739	6	6.515742			
150	6739	7	7.343901			
150	6739	8	6.381767			
150	6739	9	7.622279			
150	6739	10	6.822878			
151	6554	1	30.38366		NW	6782 (E), 6554 (SE) & BUSH RIVER RD
151	6554	2	28.341281			
151	6554	3	28.888726			
151	6554	4	28.554627			
151	6554	5	27.893815			
151	6554	6	31.646622			
151	6554	7	29.374504			
151	6554	8	29.665229			
151	6554	9	29.267797			
151	6554	10	28.730538			
151	6782	1	0		W	6782 (E), 6554 (SE) & BUSH RIVER RD
151	6782	2	0			
151	6782	3	0			
151	6782	4	0			
151	6782	5	0			
151	6782	6	0			
151	6782	7	0			
151	6782	8	0			
151	6782	9	0			
151	6782	10	0			
100000093	4299	1	26.05998	RAMP	SW	SUNSET BLVD & RAMP
100000093	4299	2	23.788127			
100000093	4299	3	24.266479			
100000093	4299	4	24.469471			
100000093	4299	5	25.727979			
100000093	4299	6	24.205101			
100000093	4299	7	23.556573			
100000093	4299	8	26.943415			
100000093	4299	9	25.854649			
100000093	4299	10	26.554112			
100000093	4949	1	23.935976	SUNSET BLVD	E	SUNSET BLVD & RAMP
100000093	4949	2	24.726998			
100000093	4949	3	21.590284			
100000093	4949	4	22.501711			
100000093	4949	5	22.509526			
100000093	4949	6	22.628348			
100000093	4949	7	23.605662			
100000093	4949	8	22.056846			
100000093	4949	9	22.586827			
100000093	4949	10	22.655751			
100000093	4950	1	0.025245	SUNSET BLVD	W	SUNSET BLVD & RAMP
100000093	4950	2	0.055429			
100000093	4950	3	0.066204			
100000093	4950	4	0.039683			
100000093	4950	5	0.067949			
100000093	4950	6	0.06279			
100000093	4950	7	0.005553			
100000093	4950	8	0.004306			
100000093	4950	9	0.004389			
100000093	4950	10	0.012496			
100000120	5030	1	86.645472	SUNSET BLVD	W	CORLEY MILL RD, SUNSET BLVD & GINNY LN
100000120	5030	2	89.136684			
100000120	5030	3	86.266022			
100000120	5030	4	80.404122			
100000120	5030	5	93.877423			
100000120	5030	6	76.743704			
100000120	5030	7	69.931847			
100000120	5030	8	71.689599			
100000120	5030	9	84.409938			
100000120	5030	10	87.798325			
100000120	5352	1	82.260348	CORLEY MILL RD	S	CORLEY MILL RD, SUNSET BLVD & GINNY LN
100000120	5352	2	80.944156			
100000120	5352	3	70.129323			
100000120	5352	4	98.53115			
100000120	5352	5	75.957576			
100000120	5352	6	77.030962			
100000120	5352	7	79.533806			
100000120	5352	8	78.098759			
100000120	5352	9	75.603495			
100000120	5352	10	93.318806			
100000120	5353	1	50.675831	GINNY LN	N	CORLEY MILL RD, SUNSET BLVD & GINNY LN
100000120	5353	2	57.464766			
100000120	5353	3	53.843858			
100000120	5353	4	67.419248			
100000120	5353	5	63.412017			
100000120	5353	6	59.501518			
100000120	5353	7	48.895701			
100000120	5353	8	61.225762			
100000120	5353	9	58.253581			
100000120	5353	10	57.649576			
100000120	5355	1	55.185453	SUNSET BLVD	E	CORLEY MILL RD, SUNSET BLVD & GINNY LN
100000120	5355	2	51.116209			
100000120	5355	3	104.728123			
100000120	5355	4	52.562665			
100000120	5355	5	59.415916			
100000120	5355	6	53.637417			
100000120	5355	7	47.533022			
100000120	5355	8	57.702779			
100000120	5355	9	103.312127			
100000120	5355	10	77.36249			
100000134	2052	1	18.605467	RAMP	SW	SUNSET BLVD & RAMP
100000134	2052	2	16.700421			
100000134	2052	3	17.403472			
100000134	2052	4	16.982033			
100000134	2052	5	17.337703			
100000134	2052	6	17.483229			
100000134	2052	7	20.053644			
100000134	2052	8	18.16862			
100000134	2052	9	19.027823			
100000134	2052	10	19.288327			
100000134	5022	1	8.130722	SUNSET BLVD	NW	SUNSET BLVD & RAMP
100000134	5022	2	13.34944			
100000134	5022	3	12.730786			
100000134	5022	4	11.206736			
100000134	5022	5	10.718791			
100000134	5022	6	9.604598			
100000134	5022	7	11.769415			
100000134	5022	8	8.377019			
100000134	5022	9	8.619275			
100000134	5022	10	9.462121			

Node	Superlink	Run	Average Control Delay	Approach Street Name	Direction	Intersection
100000134	5030	1	21.91993	SUNSET BLVD	SE	SUNSET BLVD & RAMP
100000134	5030	2	20.332103			
100000134	5030	3	20.626047			
100000134	5030	4	20.149829			
100000134	5030	5	21.157704			
100000134	5030	6	23.677888			
100000134	5030	7	20.190184			
100000134	5030	8	21.279618			
100000134	5030	9	25.191192			
100000134	5030	10	24.580885			
100000135	2039	1	16.766085	RAMP	NE	SUNSET BLVD & RAMP
100000135	2039	2	14.627067			
100000135	2039	3	19.329061			
100000135	2039	4	19.353393			
100000135	2039	5	20.544135			
100000135	2039	6	17.688926			
100000135	2039	7	18.237124			
100000135	2039	8	16.528121			
100000135	2039	9	18.129121			
100000135	2039	10	15.076516			
100000135	5021	1	6.299153	SUNSET BLVD	NW	SUNSET BLVD & RAMP
100000135	5021	2	5.435753			
100000135	5021	3	6.884496			
100000135	5021	4	6.479248			
100000135	5021	5	7.9708			
100000135	5021	6	6.431017			
100000135	5021	7	6.959868			
100000135	5021	8	5.776557			
100000135	5021	9	7.269579			
100000135	5021	10	6.479118			
100000135	5022	1	17.432545	SUNSET BLVD	SE	SUNSET BLVD & RAMP
100000135	5022	2	28.331202			
100000135	5022	3	12.287893			
100000135	5022	4	15.477491			
100000135	5022	5	17.429953			
100000135	5022	6	39.465774			
100000135	5022	7	19.629236			
100000135	5022	8	23.683656			
100000135	5022	9	40.330044			
100000135	5022	10	33.359547			
100000136	5021	1	33.111839	SUNSET BLVD	SE	SUNSET BLVD, CROMER RD & DAVEGA DR
100000136	5021	2	42.123569			
100000136	5021	3	30.767428			
100000136	5021	4	29.621423			
100000136	5021	5	34.48623			
100000136	5021	6	39.736542			
100000136	5021	7	32.499259			
100000136	5021	8	36.190099			
100000136	5021	9	39.082385			
100000136	5021	10	38.26264			
100000136	5362	1	95.352772	CROMER RD	NE	SUNSET BLVD, CROMER RD & DAVEGA DR
100000136	5362	2	95.542454			
100000136	5362	3	114.9721			
100000136	5362	4	106.174981			
100000136	5362	5	146.692895			
100000136	5362	6	127.548798			
100000136	5362	7	164.511336			
100000136	5362	8	147.579816			
100000136	5362	9	135.080596			
100000136	5362	10	87.411552			
100000136	5364	1	35.921996	SUNSET BLVD	NW	SUNSET BLVD, CROMER RD & DAVEGA DR
100000136	5364	2	49.552077			
100000136	5364	3	47.457952			
100000136	5364	4	39.791927			
100000136	5364	5	36.074104			
100000136	5364	6	52.439835			
100000136	5364	7	36.273578			
100000136	5364	8	39.116293			
100000136	5364	9	36.544986			
100000136	5364	10	33.10469			
100000136	6459	1	23.791063	DAVEGA DR	SW	SUNSET BLVD, CROMER RD & DAVEGA DR
100000136	6459	2	22.52177			
100000136	6459	3	23.383205			
100000136	6459	4	31.857159			
100000136	6459	5	19.683571			
100000136	6459	6	34.107365			
100000136	6459	7	17.421292			
100000136	6459	8	26.453819			
100000136	6459	9	22.440607			
100000136	6459	10	23.619902			
100000144	5376	1	51.393858	SUNSET BLVD	E	W. HOSPITAL DR, SUNSET BLVD & SUNSET CT
100000144	5376	2	89.914103			
100000144	5376	3	40.460902			
100000144	5376	4	49.692516			
100000144	5376	5	34.348044			
100000144	5376	6	46.31919			
100000144	5376	7	48.039051			
100000144	5376	8	56.446413			
100000144	5376	9	29.657423			
100000144	5376	10	54.857311			
100000144	6760	1	60.462546	W. HOSPITAL DR	S	W. HOSPITAL DR, SUNSET BLVD & SUNSET CT
100000144	6760	2	70.532227			
100000144	6760	3	60.483987			
100000144	6760	4	54.375774			
100000144	6760	5	53.372749			
100000144	6760	6	59.972804			
100000144	6760	7	63.453649			
100000144	6760	8	54.623807			
100000144	6760	9	61.38482			
100000144	6760	10	60.963549			
100000144	6761	1		SUNSET CT	N	W. HOSPITAL DR, SUNSET BLVD & SUNSET CT
100000144	6761	2				
100000144	6761	3				
100000144	6761	4				
100000144	6761	5				
100000144	6761	6				
100000144	6761	7				
100000144	6761	8				
100000144	6761	9				
100000144	6761	10				
100000144	6762	1	3.296459	SUNSET BLVD	W	W. HOSPITAL DR, SUNSET BLVD & SUNSET CT
100000144	6762	2	3.113277			
100000144	6762	3	4.622277			
100000144	6762	4	2.058287			
100000144	6762	5	4.679766			

Node	Superlink	Run	Average Control Delay	Approach Street Name	Direction	Intersection
100000144	6762	6	3.368158			
100000144	6762	7	2.894059			
100000144	6762	8	1.581337			
100000144	6762	9	2.338282			
100000144	6762	10	4.17245			
100000150	3361	1	30.419369	I-26 EB EXIT 101 OFF RAMP	SW	I-26 EB EXIT 101 OFF RAMP & BROAD RIVER RD
100000150	3361	2	60.129097			
100000150	3361	3	23.472244			
100000150	3361	4	29.434179			
100000150	3361	5	81.573396			
100000150	3361	6	31.444238			
100000150	3361	7	28.889383			
100000150	3361	8	30.718703			
100000150	3361	9	49.684555			
100000150	3361	10	24.964868			
100000150	5071	1	0	BROAD RIVER RD	E	I-26 EB EXIT 101 OFF RAMP & BROAD RIVER RD
100000150	5071	2	0			
100000150	5071	3	0			
100000150	5071	4	0			
100000150	5071	5	0			
100000150	5071	6	0			
100000150	5071	7	0			
100000150	5071	8	0			
100000150	5071	9	0			
100000150	5071	10	0			
100000150	5073	1	0.052453	BROAD RIVER RD	W	I-26 EB EXIT 101 OFF RAMP & BROAD RIVER RD
100000150	5073	2	0.060931			
100000150	5073	3	0.107924			
100000150	5073	4	0.040366			
100000150	5073	5	0.063341			
100000150	5073	6	0.053537			
100000150	5073	7	0.07655			
100000150	5073	8	0.069221			
100000150	5073	9	0.066641			
100000150	5073	10	0.062874			
100000151	5072	1	3.232356	BROAD RIVER RD	E	BROAD RIVER RD & I-26 EB EXIT 101 ON RAMP
100000151	5072	2	3.345499			
100000151	5072	3	3.494071			
100000151	5072	4	3.677546			
100000151	5072	5	3.950984			
100000151	5072	6	4.241951			
100000151	5072	7	3.172921			
100000151	5072	8	2.639824			
100000151	5072	9	3.846492			
100000151	5072	10	3.485731			
100000151	5075	1	5.325179	BROAD RIVER RD	W	BROAD RIVER RD & I-26 EB EXIT 101 ON RAMP
100000151	5075	2	5.73204			
100000151	5075	3	5.458714			
100000151	5075	4	5.965823			
100000151	5075	5	5.4508			
100000151	5075	6	6.187288			
100000151	5075	7	5.936745			
100000151	5075	8	5.385121			
100000151	5075	9	5.935082			
100000151	5075	10	5.017442			
100000163	4947	1	6.588529	SUNSET BLVD	E	MCSWAIN DR, SUNSET BLVD & CHRIS DR
100000163	4947	2	7.271765			
100000163	4947	3	7.840548			
100000163	4947	4	7.614224			
100000163	4947	5	7.368878			
100000163	4947	6	7.900048			
100000163	4947	7	7.647177			
100000163	4947	8	8.082997			
100000163	4947	9	7.623893			
100000163	4947	10	7.086496			
100000163	5388	1	5.356822	SUNSET BLVD	NW	MCSWAIN DR, SUNSET BLVD & CHRIS DR
100000163	5388	2	6.629247			
100000163	5388	3	6.654092			
100000163	5388	4	6.99644			
100000163	5388	5	6.360333			
100000163	5388	6	6.955212			
100000163	5388	7	6.545001			
100000163	5388	8	6.838461			
100000163	5388	9	9.640684			
100000163	5388	10	6.456326			
100000163	5389	1	18.077694	MCSWAIN DR	S	MCSWAIN DR, SUNSET BLVD & CHRIS DR
100000163	5389	2	20.98218			
100000163	5389	3	19.658902			
100000163	5389	4	23.066048			
100000163	5389	5	22.39984			
100000163	5389	6	23.371937			
100000163	5389	7	19.098492			
100000163	5389	8	19.477936			
100000163	5389	9	22.011181			
100000163	5389	10	20.476416			
100000163	5418	1	62.41899	CHRIS DR	N	MCSWAIN DR, SUNSET BLVD & CHRIS DR
100000163	5418	2	78.953625			
100000163	5418	3	90.527274			
100000163	5418	4	80.394766			
100000163	5418	5	76.658544			
100000163	5418	6	81.289625			
100000163	5418	7	70.217564			
100000163	5418	8	72.938651			
100000163	5418	9	78.739365			
100000163	5418	10	95.759017			
100000165	5102	1	11.08697	HARBISON BLVD	SW	HARBISON BLVD & WOODCROSS DR
100000165	5102	2	10.231264			
100000165	5102	3	12.920106			
100000165	5102	4	12.232839			
100000165	5102	5	12.190271			
100000165	5102	6	10.324742			
100000165	5102	7	12.574999			
100000165	5102	8	13.022098			
100000165	5102	9	11.342831			
100000165	5102	10	13.158458			
100000165	5103	1	43.870029	WOODCROSS DR	NW	HARBISON BLVD & WOODCROSS DR
100000165	5103	2	45.612608			
100000165	5103	3	46.916165			
100000165	5103	4	44.308477			
100000165	5103	5	42.95577			
100000165	5103	6	46.083957			
100000165	5103	7	45.914024			
100000165	5103	8	47.053224			
100000165	5103	9	48.741571			
100000165	5103	10	43.402197			

Node	Superlink	Run	Average Control Delay	Approach Street Name	Direction	Intersection
100000165	6719	1	3.949636	HARBISON BLVD	NE	HARBISON BLVD & WOODCROSS DR
100000165	6719	2	4.103955			
100000165	6719	3	4.984603			
100000165	6719	4	5.175528			
100000165	6719	5	4.504053			
100000165	6719	6	4.167642			
100000165	6719	7	4.460485			
100000165	6719	8	3.957135			
100000165	6719	9	4.926276			
100000165	6719	10	4.92899			
100000168	5364	1	16.041454	SUNSET BLVD	E	SUNSET BLVD & LEAPHART RD
100000168	5364	2	15.787035			
100000168	5364	3	13.522824			
100000168	5364	4	13.428239			
100000168	5364	5	11.471163			
100000168	5364	6	15.388615			
100000168	5364	7	12.061749			
100000168	5364	8	19.080414			
100000168	5364	9	13.198399			
100000168	5364	10	9.396929			
100000168	5366	1	74.976449	LEAPHART RD	N	SUNSET BLVD & LEAPHART RD
100000168	5366	2	72.80384			
100000168	5366	3	66.464301			
100000168	5366	4	82.78346			
100000168	5366	5	65.044187			
100000168	5366	6	72.248262			
100000168	5366	7	76.380423			
100000168	5366	8	67.845031			
100000168	5366	9	61.570097			
100000168	5366	10	71.272925			
100000168	5372	1	10.972875	SUNSET BLVD	W	SUNSET BLVD & LEAPHART RD
100000168	5372	2	10.0073			
100000168	5372	3	10.886109			
100000168	5372	4	9.545296			
100000168	5372	5	10.977778			
100000168	5372	6	10.187932			
100000168	5372	7	9.483907			
100000168	5372	8	9.065305			
100000168	5372	9	11.350845			
100000168	5372	10	11.192194			
100000174	3229	1	22.630471	I-26 EB EXIT 104 OFF RAMP	SE	PINEY GROVE RD, I-26 EB EXIT 104 OFF RAMP & I-26 EB EXIT 104 ON RAMP
100000174	3229	2	23.863135			
100000174	3229	3	22.352127			
100000174	3229	4	25.678684			
100000174	3229	5	22.50718			
100000174	3229	6	24.812792			
100000174	3229	7	22.977868			
100000174	3229	8	23.057461			
100000174	3229	9	24.061741			
100000174	3229	10	24.646727			
100000174	5112	1	13.330819	PINEY GROVE RD	W	PINEY GROVE RD, I-26 EB EXIT 104 OFF RAMP & I-26 EB EXIT 104 ON RAMP
100000174	5112	2	14.595468			
100000174	5112	3	11.519168			
100000174	5112	4	12.765576			
100000174	5112	5	13.368414			
100000174	5112	6	12.391895			
100000174	5112	7	11.844197			
100000174	5112	8	14.688852			
100000174	5112	9	14.711086			
100000174	5112	10	11.245554			
100000174	6660	1	7.817404	PINEY GROVE RD	E	PINEY GROVE RD, I-26 EB EXIT 104 OFF RAMP & I-26 EB EXIT 104 ON RAMP
100000174	6660	2	6.324851			
100000174	6660	3	6.163905			
100000174	6660	4	6.566954			
100000174	6660	5	7.485304			
100000174	6660	6	6.238243			
100000174	6660	7	7.291969			
100000174	6660	8	6.748994			
100000174	6660	9	6.447036			
100000174	6660	10	6.214487			
100000177	5112	1	11.841033	PINEY GROVE RD	E	PINEY GROVE RD, I-26 WB EXIT 104 OFF RAMP & I-26 WB EXIT 104 ON RAMP
100000177	5112	2	11.322695			
100000177	5112	3	10.976431			
100000177	5112	4	11.451754			
100000177	5112	5	9.218192			
100000177	5112	6	11.025093			
100000177	5112	7	11.712548			
100000177	5112	8	8.740061			
100000177	5112	9	10.996482			
100000177	5112	10	10.991993			
100000177	6514	1	33.213996	I-26 WB EXIT 104 OFF RAMP	N	PINEY GROVE RD, I-26 WB EXIT 104 OFF RAMP & I-26 WB EXIT 104 ON RAMP
100000177	6514	2	43.623024			
100000177	6514	3	32.332391			
100000177	6514	4	35.484911			
100000177	6514	5	32.809218			
100000177	6514	6	41.851044			
100000177	6514	7	47.743475			
100000177	6514	8	32.2948			
100000177	6514	9	37.021029			
100000177	6514	10	38.45558			
100000177	6662	1	34.598226	PINEY GROVE RD	W	PINEY GROVE RD, I-26 WB EXIT 104 OFF RAMP & I-26 WB EXIT 104 ON RAMP
100000177	6662	2	31.216091			
100000177	6662	3	33.468888			
100000177	6662	4	33.82514			
100000177	6662	5	35.124414			
100000177	6662	6	31.882903			
100000177	6662	7	33.319635			
100000177	6662	8	29.197869			
100000177	6662	9	31.354671			
100000177	6662	10	31.832274			
100000182	5117	1	0	ST ANDREWS RD	SW	ST ANDREWS RD & 6774 (S)
100000182	5117	2	0			
100000182	5117	3	0			
100000182	5117	4	0			
100000182	5117	5	0			
100000182	5117	6	0			
100000182	5117	7	0			
100000182	5117	8	0			
100000182	5117	9	0			
100000182	5117	10	0			
100000182	6737	1	0	ST ANDREWS RD	NE	ST ANDREWS RD & 6774 (S)
100000182	6737	2	0			
100000182	6737	3	0			
100000182	6737	4	0			
100000182	6737	5	0			

Node	Superlink	Run	Average Control Delay	Approach Street Name	Direction	Intersection
100000182	6737	6	0			
100000182	6737	7	0			
100000182	6737	8	0			
100000182	6737	9	0			
100000182	6737	10	0			
100000182	6774	1	124.040285		NE	ST ANDREWS RD & 6774 (S)
100000182	6774	2	139.046695			
100000182	6774	3	145.591563			
100000182	6774	4	132.638155			
100000182	6774	5	96.651222			
100000182	6774	6	99.978065			
100000182	6774	7	90.066195			
100000182	6774	8	145.43617			
100000182	6774	9	106.354561			
100000182	6774	10	123.079539			
100000184	5499	1	13.015355	N ARROWWOOD RD	S	ARROWWOOD RD, BUSH RIVER RD & N ARROWWOOD RD
100000184	5499	2	13.923564			
100000184	5499	3	16.093189			
100000184	5499	4	11.292502			
100000184	5499	5	14.832146			
100000184	5499	6	13.131218			
100000184	5499	7	13.088501			
100000184	5499	8	14.586428			
100000184	5499	9	13.640772			
100000184	5499	10	12.945718			
100000184	5500	1	29.264481	ARROWWOOD RD	N	ARROWWOOD RD, BUSH RIVER RD & N ARROWWOOD RD
100000184	5500	2	30.836667			
100000184	5500	3	32.790823			
100000184	5500	4	30.424544			
100000184	5500	5	30.609017			
100000184	5500	6	30.003255			
100000184	5500	7	31.484983			
100000184	5500	8	30.295901			
100000184	5500	9	27.917423			
100000184	5500	10	27.836161			
100000184	6497	1	3.02808	BUSH RIVER RD	W	ARROWWOOD RD, BUSH RIVER RD & N ARROWWOOD RD
100000184	6497	2	6.341848			
100000184	6497	3	5.357778			
100000184	6497	4	6.77838			
100000184	6497	5	6.053127			
100000184	6497	6	10.398725			
100000184	6497	7	5.798887			
100000184	6497	8	5.114259			
100000184	6497	9	5.22404			
100000184	6497	10	5.899813			
100000184	6505	1	9.688843	BUSH RIVER RD	E	ARROWWOOD RD, BUSH RIVER RD & N ARROWWOOD RD
100000184	6505	2	12.003449			
100000184	6505	3	12.206209			
100000184	6505	4	12.980332			
100000184	6505	5	10.919349			
100000184	6505	6	11.374154			
100000184	6505	7	11.651292			
100000184	6505	8	11.287454			
100000184	6505	9	10.453376			
100000184	6505	10	10.956733			
100000185	3232	1	7.256104	RAMP	W	GREYSTONE BLVD & RAMP
100000185	3232	2	5.326827			
100000185	3232	3	3.951773			
100000185	3232	4	5.206456			
100000185	3232	5	5.97415			
100000185	3232	6	4.74996			
100000185	3232	7	8.143897			
100000185	3232	8	7.882371			
100000185	3232	9	5.672753			
100000185	3232	10	5.488891			
100000185	5140	1	0.503453	GREYSTONE BLVD	N	GREYSTONE BLVD & RAMP
100000185	5140	2	0.206481			
100000185	5140	3	0.240538			
100000185	5140	4	0.330105			
100000185	5140	5	0.21225			
100000185	5140	6	0.125348			
100000185	5140	7	0.209233			
100000185	5140	8	0.201442			
100000185	5140	9	0.302887			
100000185	5140	10	0.409006			
100000185	5143	1	5.499339	GREYSTONE BLVD	S	GREYSTONE BLVD & RAMP
100000185	5143	2	4.497665			
100000185	5143	3	3.691843			
100000185	5143	4	3.861703			
100000185	5143	5	3.441932			
100000185	5143	6	3.702391			
100000185	5143	7	5.010876			
100000185	5143	8	12.662003			
100000185	5143	9	4.880814			
100000185	5143	10	5.037413			
100000186	4949	1	18.580969	SUNSET BLVD	W	HARBOR DR, SUNSET BLVD & E HOSPITAL DR
100000186	4949	2	17.917919			
100000186	4949	3	17.292044			
100000186	4949	4	18.62615			
100000186	4949	5	19.879595			
100000186	4949	6	19.497834			
100000186	4949	7	15.408206			
100000186	4949	8	18.036116			
100000186	4949	9	18.212271			
100000186	4949	10	18.493631			
100000186	5386	1	120.594774	HARBOR DR	N	HARBOR DR, SUNSET BLVD & E HOSPITAL DR
100000186	5386	2	259.574292			
100000186	5386	3	148.995528			
100000186	5386	4	329.619164			
100000186	5386	5	219.64443			
100000186	5386	6	200.904404			
100000186	5386	7	156.168874			
100000186	5386	8	94.922039			
100000186	5386	9	111.989742			
100000186	5386	10	95.390726			
100000186	5387	1	61.253669	E HOSPITAL DR	S	HARBOR DR, SUNSET BLVD & E HOSPITAL DR
100000186	5387	2	72.439621			
100000186	5387	3	65.405857			
100000186	5387	4	62.192547			
100000186	5387	5	65.407762			
100000186	5387	6	66.682876			
100000186	5387	7	56.888282			
100000186	5387	8	69.249807			
100000186	5387	9	65.069875			
100000186	5387	10	57.902308			

Node	Superlink	Run	Average Control Delay	Approach Street Name	Direction	Intersection
100000186	6762	1	58.745468	SUNSET BLVD	E	HARBOR DR, SUNSET BLVD & E HOSPITAL DR
100000186	6762	2	69.409668			
100000186	6762	3	48.923771			
100000186	6762	4	55.793584			
100000186	6762	5	44.085133			
100000186	6762	6	54.998142			
100000186	6762	7	60.277725			
100000186	6762	8	53.649947			
100000186	6762	9	47.234601			
100000186	6762	10	47.980946			
100000187	6057	1	13.026271	BROAD RIVER RD	NW	BROAD RIVER RD, BRIARGATE CIR & MARLEY DR
100000187	6057	2	9.57621			
100000187	6057	3	10.572648			
100000187	6057	4	11.202243			
100000187	6057	5	10.656073			
100000187	6057	6	9.424397			
100000187	6057	7	11.912403			
100000187	6057	8	10.489537			
100000187	6057	9	13.112989			
100000187	6057	10	9.414912			
100000187	6059	1	21.276088	BROAD RIVER RD	SE	BROAD RIVER RD, BRIARGATE CIR & MARLEY DR
100000187	6059	2	17.62498			
100000187	6059	3	19.107531			
100000187	6059	4	19.256268			
100000187	6059	5	18.992542			
100000187	6059	6	17.928642			
100000187	6059	7	21.288642			
100000187	6059	8	16.609862			
100000187	6059	9	17.924119			
100000187	6059	10	21.716419			
100000187	6060	1	66.236089	MARLEY DR	SW	BROAD RIVER RD, BRIARGATE CIR & MARLEY DR
100000187	6060	2	77.561277			
100000187	6060	3	61.671606			
100000187	6060	4	66.108194			
100000187	6060	5	71.904572			
100000187	6060	6	57.201585			
100000187	6060	7	59.532782			
100000187	6060	8	95.198314			
100000187	6060	9	86.082983			
100000187	6060	10	83.161803			
100000187	6061	1	29.781973	BRIARGATE CIR	NE	BROAD RIVER RD, BRIARGATE CIR & MARLEY DR
100000187	6061	2	28.927626			
100000187	6061	3	30.493076			
100000187	6061	4	22.687354			
100000187	6061	5	30.018003			
100000187	6061	6	27.863814			
100000187	6061	7	28.599358			
100000187	6061	8	32.268503			
100000187	6061	9	35.65065			
100000187	6061	10	24.716231			
100000188	3222	1	5.188242	RAMP	W	GREYSTONE BLVD & RAMP
100000188	3222	2	12.820372			
100000188	3222	3	4.79168			
100000188	3222	4	5.275846			
100000188	3222	5	5.516218			
100000188	3222	6	5.172219			
100000188	3222	7	6.003485			
100000188	3222	8	3.807163			
100000188	3222	9	4.290476			
100000188	3222	10	3.771021			
100000188	5139	1	0.932667	GREYSTONE BLVD	S	GREYSTONE BLVD & RAMP
100000188	5139	2	1.045162			
100000188	5139	3	1.029554			
100000188	5139	4	0.821629			
100000188	5139	5	1.675566			
100000188	5139	6	1.028573			
100000188	5139	7	1.656797			
100000188	5139	8	1.192887			
100000188	5139	9	1.44906			
100000188	5139	10	1.290255			
100000188	5143	1	0.694016	GREYSTONE BLVD	N	GREYSTONE BLVD & RAMP
100000188	5143	2	0.654248			
100000188	5143	3	0.615651			
100000188	5143	4	0.590442			
100000188	5143	5	0.557965			
100000188	5143	6	0.574131			
100000188	5143	7	0.697237			
100000188	5143	8	0.458452			
100000188	5143	9	0.854316			
100000188	5143	10	0.63015			
100000190	5148	1	0	BROAD RIVER RD	SE	BROAD RIVER RD, EXIT 65 RAMP TO US 176 & 6579 (NE)
100000190	5148	2	0			
100000190	5148	3	0			
100000190	5148	4	0			
100000190	5148	5	0			
100000190	5148	6	0			
100000190	5148	7	0			
100000190	5148	8	0			
100000190	5148	9	0			
100000190	5148	10	0			
100000190	6445	1	3.048095	BROAD RIVER RD	NW	BROAD RIVER RD, EXIT 65 RAMP TO US 176 & 6579 (NE)
100000190	6445	2	1.719966			
100000190	6445	3	2.27567			
100000190	6445	4	2.21321			
100000190	6445	5	2.320041			
100000190	6445	6	2.134252			
100000190	6445	7	2.424637			
100000190	6445	8	2.79435			
100000190	6445	9	2.600291			
100000190	6445	10	1.517049			
100000190	6574	1	25.208941	EXIT 65 RAMP TO US 176	E	BROAD RIVER RD, EXIT 65 RAMP TO US 176 & 6579 (NE)
100000190	6574	2	27.432122			
100000190	6574	3	26.01885			
100000190	6574	4	29.307114			
100000190	6574	5	31.410334			
100000190	6574	6	25.196767			
100000190	6574	7	26.832962			
100000190	6574	8	28.930698			
100000190	6574	9	28.309241			
100000190	6574	10	25.841125			
100000195	6049	1	13.758666	BROAD RIVER RD	NW	LONGCREEK DR & BROAD RIVER RD
100000195	6049	2	14.275828			
100000195	6049	3	11.982265			
100000195	6049	4	12.078307			
100000195	6049	5	13.633654			

Node	Superlink	Run	Average Control Delay	Approach Street Name	Direction	Intersection
100000195	6049	6	12.517188			
100000195	6049	7	11.88817			
100000195	6049	8	12.845526			
100000195	6049	9	14.139829			
100000195	6049	10	9.811978			
100000195	6052	1	37.373738	LONGCREEK DR	SW	LONGCREEK DR & BROAD RIVER RD
100000195	6052	2	39.367098			
100000195	6052	3	37.614491			
100000195	6052	4	36.82921			
100000195	6052	5	41.88469			
100000195	6052	6	34.037122			
100000195	6052	7	30.324845			
100000195	6052	8	37.803138			
100000195	6052	9	37.434366			
100000195	6052	10	42.579317			
100000195	6445	1	8.222224	BROAD RIVER RD	SE	LONGCREEK DR & BROAD RIVER RD
100000195	6445	2	9.425937			
100000195	6445	3	9.67262			
100000195	6445	4	7.91822			
100000195	6445	5	8.881177			
100000195	6445	6	8.626511			
100000195	6445	7	6.6434			
100000195	6445	8	8.656788			
100000195	6445	9	9.341827			
100000195	6445	10	9.002681			
100000252	5125	1	46.060187	BUSH RIVER RD	E	MORNINGHILL DR, BUSH RIVER RD & RAMP
100000252	5125	2	32.770646			
100000252	5125	3	38.294377			
100000252	5125	4	46.884909			
100000252	5125	5	49.566601			
100000252	5125	6	58.177384			
100000252	5125	7	39.6323			
100000252	5125	8	37.420599			
100000252	5125	9	37.886369			
100000252	5125	10	45.183003			
100000252	5487	1	40.707783	MORNINGHILL DR	S	MORNINGHILL DR, BUSH RIVER RD & RAMP
100000252	5487	2	38.30767			
100000252	5487	3	36.31012			
100000252	5487	4	37.259705			
100000252	5487	5	43.526536			
100000252	5487	6	45.385525			
100000252	5487	7	43.379442			
100000252	5487	8	41.670346			
100000252	5487	9	40.066191			
100000252	5487	10	40.165846			
100000252	5488	1		RAMP	N	MORNINGHILL DR, BUSH RIVER RD & RAMP
100000252	5488	2				
100000252	5488	3				
100000252	5488	4				
100000252	5488	5				
100000252	5488	6				
100000252	5488	7				
100000252	5488	8				
100000252	5488	9				
100000252	5488	10				
100000252	6505	1	22.135328	BUSH RIVER RD	W	MORNINGHILL DR, BUSH RIVER RD & RAMP
100000252	6505	2	26.842981			
100000252	6505	3	22.923219			
100000252	6505	4	21.83488			
100000252	6505	5	20.957664			
100000252	6505	6	25.072759			
100000252	6505	7	20.762141			
100000252	6505	8	20.789614			
100000252	6505	9	24.435638			
100000252	6505	10	23.477608			
100000254	5119	1	0	WOODLAND HILLS RD	S	WOODLAND HILLS RD & FRONTAGE RD
100000254	5119	2	0			
100000254	5119	3	0.001213			
100000254	5119	4	0			
100000254	5119	5	0			
100000254	5119	6	0			
100000254	5119	7	0			
100000254	5119	8	0			
100000254	5119	9	0			
100000254	5119	10	0			
100000254	5607	1	39.253615	WOODLAND HILLS RD	N	WOODLAND HILLS RD & FRONTAGE RD
100000254	5607	2	23.513198			
100000254	5607	3	25.311219			
100000254	5607	4	19.232473			
100000254	5607	5	23.45117			
100000254	5607	6	20.760734			
100000254	5607	7	20.040189			
100000254	5607	8	17.747294			
100000254	5607	9	43.556322			
100000254	5607	10	19.782303			
100000254	6538	1		FRONTAGE RD	W	WOODLAND HILLS RD & FRONTAGE RD
100000254	6538	2				
100000254	6538	3				
100000254	6538	4				
100000254	6538	5				
100000254	6538	6				
100000254	6538	7				
100000254	6538	8				
100000254	6538	9				
100000254	6538	10				
100000255	5470	1	33.110018	INDEPENDENCE AVE	N	BUSH RIVER RD & INDEPENDENCE AVE
100000255	5470	2	32.158055			
100000255	5470	3	32.836923			
100000255	5470	4	30.935827			
100000255	5470	5	32.699163			
100000255	5470	6	30.212915			
100000255	5470	7	32.664367			
100000255	5470	8	32.009471			
100000255	5470	9	31.302505			
100000255	5470	10	32.06151			
100000255	5471	1	12.877748	BUSH RIVER RD	W	BUSH RIVER RD & INDEPENDENCE AVE
100000255	5471	2	27.962607			
100000255	5471	3	11.607921			
100000255	5471	4	18.954613			
100000255	5471	5	11.113998			
100000255	5471	6	28.427025			
100000255	5471	7	35.88967			
100000255	5471	8	15.260466			
100000255	5471	9	16.070384			
100000255	5471	10	13.517361			

Node	Superlink	Run	Average Control Delay	Approach Street Name	Direction	Intersection
100000255	6740	1	10.795734	BUSH RIVER RD	E	BUSH RIVER RD & INDEPENDENCE AVE
100000255	6740	2	10.452025			
100000255	6740	3	9.71136			
100000255	6740	4	10.52305			
100000255	6740	5	9.64069			
100000255	6740	6	9.868957			
100000255	6740	7	11.139043			
100000255	6740	8	10.721972			
100000255	6740	9	10.569079			
100000255	6740	10	9.809098			
100000256	5131	1	8.166568	BUSH RIVER RD	W	BUSH RIVER RD & ZIMALCREST DR
100000256	5131	2	10.978908			
100000256	5131	3	8.596475			
100000256	5131	4	9.818108			
100000256	5131	5	8.729914			
100000256	5131	6	9.800539			
100000256	5131	7	9.330836			
100000256	5131	8	10.190538			
100000256	5131	9	9.549211			
100000256	5131	10	7.439367			
100000256	5465	1	5.542888	BUSH RIVER RD	E	BUSH RIVER RD & ZIMALCREST DR
100000256	5465	2	5.21545			
100000256	5465	3	4.586145			
100000256	5465	4	4.64044			
100000256	5465	5	4.722486			
100000256	5465	6	6.382766			
100000256	5465	7	6.170814			
100000256	5465	8	5.416646			
100000256	5465	9	4.632525			
100000256	5465	10	5.073431			
100000256	5484	1	44.95863	ZIMALCREST DR	S	BUSH RIVER RD & ZIMALCREST DR
100000256	5484	2	45.394917			
100000256	5484	3	45.744006			
100000256	5484	4	35.284976			
100000256	5484	5	39.314575			
100000256	5484	6	43.495294			
100000256	5484	7	38.680901			
100000256	5484	8	36.627976			
100000256	5484	9	45.042801			
100000256	5484	10	34.409615			
100000256	5485	1	8.979264	ZIMALCREST DR	N	BUSH RIVER RD & ZIMALCREST DR
100000256	5485	2	7.278821			
100000256	5485	3	8.262114			
100000256	5485	4	7.560028			
100000256	5485	5	8.035547			
100000256	5485	6	9.481297			
100000256	5485	7	8.921366			
100000256	5485	8	7.340149			
100000256	5485	9	8.215249			
100000256	5485	10	7.438962			
100000348	5116	1	8.48641	ST ANDREWS RD	NW	ST ANDREWS RD & JAMIL RD
100000348	5116	2	10.001514			
100000348	5116	3	12.507144			
100000348	5116	4	10.3494			
100000348	5116	5	9.582769			
100000348	5116	6	10.519803			
100000348	5116	7	9.328237			
100000348	5116	8	9.903331			
100000348	5116	9	9.827015			
100000348	5116	10	10.260815			
100000348	6114	1	34.943384	ST ANDREWS RD	E	ST ANDREWS RD & JAMIL RD
100000348	6114	2	25.632758			
100000348	6114	3	31.944673			
100000348	6114	4	34.134986			
100000348	6114	5	23.907435			
100000348	6114	6	27.233843			
100000348	6114	7	26.580479			
100000348	6114	8	42.981568			
100000348	6114	9	33.221501			
100000348	6114	10	23.943202			
100000348	6119	1	31.923581	JAMIL RD	S	ST ANDREWS RD & JAMIL RD
100000348	6119	2	35.725942			
100000348	6119	3	36.228581			
100000348	6119	4	34.14799			
100000348	6119	5	31.053625			
100000348	6119	6	32.174721			
100000348	6119	7	32.874257			
100000348	6119	8	37.237185			
100000348	6119	9	38.039177			
100000348	6119	10	33.028727			
100000353	6125	1	24.416259	BOWER PKY	SE	BOWER PKY, PINEY GROVE RD & JAMIL RD
100000353	6125	2	23.817469			
100000353	6125	3	22.310482			
100000353	6125	4	20.521732			
100000353	6125	5	22.442447			
100000353	6125	6	22.702423			
100000353	6125	7	23.280767			
100000353	6125	8	20.352643			
100000353	6125	9	22.621214			
100000353	6125	10	21.803721			
100000353	6126	1	41.621613	PINEY GROVE RD	E	BOWER PKY, PINEY GROVE RD & JAMIL RD
100000353	6126	2	56.625724			
100000353	6126	3	92.831101			
100000353	6126	4	85.488049			
100000353	6126	5	32.165081			
100000353	6126	6	77.377385			
100000353	6126	7	39.51479			
100000353	6126	8	69.037792			
100000353	6126	9	44.094951			
100000353	6126	10	41.791763			
100000353	6127	1	43.282508	JAMIL RD	NW	BOWER PKY, PINEY GROVE RD & JAMIL RD
100000353	6127	2	52.371011			
100000353	6127	3	79.322453			
100000353	6127	4	46.223594			
100000353	6127	5	39.555907			
100000353	6127	6	43.800591			
100000353	6127	7	44.10472			
100000353	6127	8	45.762431			
100000353	6127	9	37.864644			
100000353	6127	10	43.652485			
100000353	6659	1	75.415066	PINEY GROVE RD	W	BOWER PKY, PINEY GROVE RD & JAMIL RD
100000353	6659	2	86.679324			
100000353	6659	3	106.831446			
100000353	6659	4	60.545494			
100000353	6659	5	81.094535			

Node	Superlink	Run	Average Control Delay	Approach Street Name	Direction	Intersection
100000353	6659	6	91.571775			
100000353	6659	7	65.818255			
100000353	6659	8	44.445094			
100000353	6659	9	42.766959			
100000353	6659	10	57.34451			
100000354	6094	1	111.793071	ST ANDREWS RD	SW	ST ANDREWS RD, KAY ST & CHARTWELL RD
100000354	6094	2	35.148088			
100000354	6094	3	86.73873			
100000354	6094	4	35.330168			
100000354	6094	5	27.626696			
100000354	6094	6	35.79035			
100000354	6094	7	31.795439			
100000354	6094	8	64.856			
100000354	6094	9	48.66711			
100000354	6094	10	50.593392			
100000354	6098	1	38.427297	CHARTWELL RD	NW	ST ANDREWS RD, KAY ST & CHARTWELL RD
100000354	6098	2	54.891812			
100000354	6098	3	59.364519			
100000354	6098	4	44.736243			
100000354	6098	5	40.276929			
100000354	6098	6	47.375901			
100000354	6098	7	38.814685			
100000354	6098	8	38.95727			
100000354	6098	9	48.006682			
100000354	6098	10	43.586937			
100000354	6099	1	27.015072	KAY ST	SE	ST ANDREWS RD, KAY ST & CHARTWELL RD
100000354	6099	2	18.370294			
100000354	6099	3	25.49208			
100000354	6099	4	23.216142			
100000354	6099	5	21.960454			
100000354	6099	6	21.474234			
100000354	6099	7	20.78169			
100000354	6099	8	27.385101			
100000354	6099	9	29.638279			
100000354	6099	10	26.170816			
100000354	6100	1	17.537005	ST ANDREWS RD	NE	ST ANDREWS RD, KAY ST & CHARTWELL RD
100000354	6100	2	11.501432			
100000354	6100	3	13.741578			
100000354	6100	4	12.296126			
100000354	6100	5	11.012436			
100000354	6100	6	15.695125			
100000354	6100	7	12.924204			
100000354	6100	8	16.276944			
100000354	6100	9	11.301633			
100000354	6100	10	12.664059			
100000358	5117	1	23.440608	ST ANDREWS RD	NE	ST ANDREWS RD, FERNANDINA RD & BURNING TREE RD
100000358	5117	2	22.173175			
100000358	5117	3	24.236374			
100000358	5117	4	23.858238			
100000358	5117	5	21.998085			
100000358	5117	6	24.174463			
100000358	5117	7	24.36814			
100000358	5117	8	24.970501			
100000358	5117	9	23.109303			
100000358	5117	10	22.712722			
100000358	6100	1	64.95759	ST ANDREWS RD	SW	ST ANDREWS RD, FERNANDINA RD & BURNING TREE RD
100000358	6100	2	52.533726			
100000358	6100	3	59.143319			
100000358	6100	4	51.725362			
100000358	6100	5	44.824899			
100000358	6100	6	50.62446			
100000358	6100	7	49.818788			
100000358	6100	8	55.443734			
100000358	6100	9	56.395943			
100000358	6100	10	55.670607			
100000358	6101	1	23.287411	BURNING TREE RD	NW	ST ANDREWS RD, FERNANDINA RD & BURNING TREE RD
100000358	6101	2	25.232225			
100000358	6101	3	25.423818			
100000358	6101	4	26.579409			
100000358	6101	5	22.944831			
100000358	6101	6	25.795056			
100000358	6101	7	24.562347			
100000358	6101	8	21.871161			
100000358	6101	9	26.782885			
100000358	6101	10	25.145392			
100000358	6102	1	22.013503	FERNANDINA RD	SE	ST ANDREWS RD, FERNANDINA RD & BURNING TREE RD
100000358	6102	2	23.455109			
100000358	6102	3	27.806262			
100000358	6102	4	24.138534			
100000358	6102	5	22.466608			
100000358	6102	6	25.428755			
100000358	6102	7	23.368159			
100000358	6102	8	20.316439			
100000358	6102	9	21.840421			
100000358	6102	10	27.750911			
100000360	6101	1	0	BURNING TREE RD	S	I-26 WB TO BURNING TREE RD EXIT 106 OFF RAMP & BURNING TREE RD
100000360	6101	2	0			
100000360	6101	3	0			
100000360	6101	4	0			
100000360	6101	5	0			
100000360	6101	6	0			
100000360	6101	7	0			
100000360	6101	8	0			
100000360	6101	9	0			
100000360	6101	10	0			
100000360	6105	1	0.007055	BURNING TREE RD	N	I-26 WB TO BURNING TREE RD EXIT 106 OFF RAMP & BURNING TREE RD
100000360	6105	2	0.014256			
100000360	6105	3	0.022883			
100000360	6105	4	0.010754			
100000360	6105	5	0.013753			
100000360	6105	6	0.008719			
100000360	6105	7	0.01205			
100000360	6105	8	0.023607			
100000360	6105	9	0.014976			
100000360	6105	10	0.005394			
100000360	6766	1	25.114485	I-26 WB TO BURNING TREE RD EXIT 106 OFF RAI	NE	I-26 WB TO BURNING TREE RD EXIT 106 OFF RAMP & BURNING TREE RD
100000360	6766	2	15.01447			
100000360	6766	3	16.476938			
100000360	6766	4	17.896014			
100000360	6766	5	13.854165			
100000360	6766	6	23.50185			
100000360	6766	7	23.868168			
100000360	6766	8	20.646307			
100000360	6766	9	14.886161			
100000360	6766	10	20.363657			

Node	Superlink	Run	Average Control Delay	Approach Street Name	Direction	Intersection
100000362	6134	1	17.838758	JAMIL RD	NW	HARBISON BLVD & JAMIL RD
100000362	6134	2	20.057256			
100000362	6134	3	14.346454			
100000362	6134	4	20.203898			
100000362	6134	5	22.349709			
100000362	6134	6	14.795247			
100000362	6134	7	22.597678			
100000362	6134	8	18.965751			
100000362	6134	9	16.79911			
100000362	6134	10	18.968981			
100000362	6137	1	0.685591	HARBISON BLVD	NE	HARBISON BLVD & JAMIL RD
100000362	6137	2	0.606587			
100000362	6137	3	1.056301			
100000362	6137	4	0.967331			
100000362	6137	5	1.095183			
100000362	6137	6	1.06411			
100000362	6137	7	0.81378			
100000362	6137	8	0.91755			
100000362	6137	9	1.011495			
100000362	6137	10	0.901948			
100000362	6717	1	0.099772	HARBISON BLVD	SW	HARBISON BLVD & JAMIL RD
100000362	6717	2	0.051197			
100000362	6717	3	0.028871			
100000362	6717	4	0.060203			
100000362	6717	5	0.167926			
100000362	6717	6	0.094292			
100000362	6717	7	0.065555			
100000362	6717	8	0.109309			
100000362	6717	9	0.145861			
100000362	6717	10	0.278175			
100000364	6145	1	10.385531	HARBISON BLVD	SW	HARBISON BLVD & COLUMBIANA DR
100000364	6145	2	12.789278			
100000364	6145	3	11.875264			
100000364	6145	4	10.085695			
100000364	6145	5	11.157973			
100000364	6145	6	11.207624			
100000364	6145	7	11.560016			
100000364	6145	8	10.758879			
100000364	6145	9	10.7974			
100000364	6145	10	11.039022			
100000364	6176	1	5.378475	HARBISON BLVD	NE	HARBISON BLVD & COLUMBIANA DR
100000364	6176	2	5.93152			
100000364	6176	3	5.36515			
100000364	6176	4	5.713837			
100000364	6176	5	5.164421			
100000364	6176	6	5.505767			
100000364	6176	7	6.057253			
100000364	6176	8	6.257684			
100000364	6176	9	5.496309			
100000364	6176	10	4.974556			
100000364	6177	1		COLUMBIANA DR	NW	HARBISON BLVD & COLUMBIANA DR
100000364	6177	2				
100000364	6177	3				
100000364	6177	4				
100000364	6177	5				
100000364	6177	6				
100000364	6177	7				
100000364	6177	8				
100000364	6177	9				
100000364	6177	10				
100000364	6196	1	43.709158	COLUMBIANA DR	SE	HARBISON BLVD & COLUMBIANA DR
100000364	6196	2	41.740198			
100000364	6196	3	47.166404			
100000364	6196	4	45.989097			
100000364	6196	5	45.752735			
100000364	6196	6	47.451326			
100000364	6196	7	60.240593			
100000364	6196	8	45.464964			
100000364	6196	9	46.612618			
100000364	6196	10	45.359945			
100000365	6137	1	11.299207	HARBISON BLVD	SW	COLUMBIANA CIR, HARBISON BLVD & PARK TERRACE DR
100000365	6137	2	12.491432			
100000365	6137	3	13.721607			
100000365	6137	4	12.717307			
100000365	6137	5	13.186958			
100000365	6137	6	14.027253			
100000365	6137	7	13.002683			
100000365	6137	8	12.704817			
100000365	6137	9	13.255218			
100000365	6137	10	12.17738			
100000365	6140	1	21.008216	COLUMBIANA CIR	SE	COLUMBIANA CIR, HARBISON BLVD & PARK TERRACE DR
100000365	6140	2	20.879927			
100000365	6140	3	16.420912			
100000365	6140	4	13.761708			
100000365	6140	5	18.860195			
100000365	6140	6	16.863603			
100000365	6140	7	21.732338			
100000365	6140	8	19.632018			
100000365	6140	9	14.274269			
100000365	6140	10	18.273516			
100000365	6145	1	2.351418	HARBISON BLVD	NE	COLUMBIANA CIR, HARBISON BLVD & PARK TERRACE DR
100000365	6145	2	1.979062			
100000365	6145	3	2.335315			
100000365	6145	4	2.216024			
100000365	6145	5	2.411932			
100000365	6145	6	2.38503			
100000365	6145	7	2.221666			
100000365	6145	8	2.731874			
100000365	6145	9	2.776727			
100000365	6145	10	2.311544			
100000365	6151	1	22.866114	PARK TERRACE DR	NW	COLUMBIANA CIR, HARBISON BLVD & PARK TERRACE DR
100000365	6151	2	22.028232			
100000365	6151	3	23.902135			
100000365	6151	4	26.220445			
100000365	6151	5	21.675306			
100000365	6151	6	25.87331			
100000365	6151	7	18.439346			
100000365	6151	8	26.993568			
100000365	6151	9	21.990589			
100000365	6151	10	23.328764			
100000391	5071	1	6.021448	BROAD RIVER RD	NW	BROAD RIVER RD & COLUMBIANA DR
100000391	5071	2	6.558345			
100000391	5071	3	7.184971			
100000391	5071	4	5.968366			
100000391	5071	5	7.673876			

Node	Superlink	Run	Average Control Delay	Approach Street Name	Direction	Intersection
100000391	5071	6	5.83757			
100000391	5071	7	6.924216			
100000391	5071	8	5.701433			
100000391	5071	9	7.866324			
100000391	5071	10	6.006337			
100000391	6214	1	45.221819	COLUMBIANA DR	NE	BROAD RIVER RD & COLUMBIANA DR
100000391	6214	2	48.064528			
100000391	6214	3	41.134416			
100000391	6214	4	52.660279			
100000391	6214	5	48.279299			
100000391	6214	6	48.478241			
100000391	6214	7	49.615777			
100000391	6214	8	43.684329			
100000391	6214	9	46.746946			
100000391	6214	10	45.057641			
100000391	6224	1	34.97627	BROAD RIVER RD	SE	BROAD RIVER RD & COLUMBIANA DR
100000391	6224	2	38.63477			
100000391	6224	3	39.542447			
100000391	6224	4	37.731353			
100000391	6224	5	39.485273			
100000391	6224	6	35.576711			
100000391	6224	7	38.506936			
100000391	6224	8	37.033241			
100000391	6224	9	41.185652			
100000391	6224	10	29.8968			
100000395	5086	1	40.723009	LAKE MURRAY BLVD	W	LAKE MURRAY BLVD & COLUMBIANA DR
100000395	5086	2	74.161693			
100000395	5086	3	39.83814			
100000395	5086	4	40.025309			
100000395	5086	5	50.345241			
100000395	5086	6	76.735479			
100000395	5086	7	27.65053			
100000395	5086	8	26.063984			
100000395	5086	9	22.462058			
100000395	5086	10	35.489542			
100000395	6208	1	34.735968	COLUMBIANA DR	NW	LAKE MURRAY BLVD & COLUMBIANA DR
100000395	6208	2	52.555619			
100000395	6208	3	50.396825			
100000395	6208	4	44.192453			
100000395	6208	5	38.43385			
100000395	6208	6	51.74852			
100000395	6208	7	41.491834			
100000395	6208	8	42.458231			
100000395	6208	9	56.071225			
100000395	6208	10	41.178199			
100000395	6214	1	68.24525	COLUMBIANA DR	S	LAKE MURRAY BLVD & COLUMBIANA DR
100000395	6214	2	175.909235			
100000395	6214	3	80.544041			
100000395	6214	4	114.404017			
100000395	6214	5	89.11873			
100000395	6214	6	96.271586			
100000395	6214	7	74.195372			
100000395	6214	8	136.629769			
100000395	6214	9	90.35664			
100000395	6214	10	135.224399			
100000395	6215	1	32.166577	LAKE MURRAY BLVD	E	LAKE MURRAY BLVD & COLUMBIANA DR
100000395	6215	2	24.806852			
100000395	6215	3	32.529241			
100000395	6215	4	26.636583			
100000395	6215	5	37.133573			
100000395	6215	6	27.855615			
100000395	6215	7	30.647547			
100000395	6215	8	43.931074			
100000395	6215	9	25.306051			
100000395	6215	10	29.876091			
100000398	5101	1	2.945785	HARBISON BLVD	W	HARBISON BLVD & PARKRIDGE DR
100000398	5101	2	3.733244			
100000398	5101	3	3.013821			
100000398	5101	4	3.758583			
100000398	5101	5	3.320814			
100000398	5101	6	4.965699			
100000398	5101	7	4.957831			
100000398	5101	8	3.942692			
100000398	5101	9	4.138025			
100000398	5101	10	4.247279			
100000398	5102	1	1.606374	HARBISON BLVD	NE	HARBISON BLVD & PARKRIDGE DR
100000398	5102	2	1.534842			
100000398	5102	3	1.009999			
100000398	5102	4	1.824799			
100000398	5102	5	1.372617			
100000398	5102	6	1.766828			
100000398	5102	7	1.700172			
100000398	5102	8	2.000868			
100000398	5102	9	0.959916			
100000398	5102	10	1.293032			
100000398	6267	1	26.423916	PARKRIDGE DR	SE	HARBISON BLVD & PARKRIDGE DR
100000398	6267	2	25.697424			
100000398	6267	3	28.444242			
100000398	6267	4	25.461467			
100000398	6267	5	29.601091			
100000398	6267	6	26.274133			
100000398	6267	7	27.127293			
100000398	6267	8	26.672026			
100000398	6267	9	33.256624			
100000398	6267	10	31.536089			
100000399	6263	1	16.034113	PINEY GROVE RD	W	PINEY GROVE RD & FERNANDINA RD
100000399	6263	2	15.11416			
100000399	6263	3	19.073766			
100000399	6263	4	17.217206			
100000399	6263	5	17.868725			
100000399	6263	6	18.507376			
100000399	6263	7	17.42824			
100000399	6263	8	16.607912			
100000399	6263	9	18.207847			
100000399	6263	10	16.959643			
100000399	6265	1	15.856282	FERNANDINA RD	SE	PINEY GROVE RD & FERNANDINA RD
100000399	6265	2	15.515197			
100000399	6265	3	14.657282			
100000399	6265	4	14.779783			
100000399	6265	5	12.953517			
100000399	6265	6	15.602363			
100000399	6265	7	15.619848			
100000399	6265	8	17.546877			
100000399	6265	9	13.957161			
100000399	6265	10	12.246804			

Node	Superlink	Run	Average Control Delay	Approach Street Name	Direction	Intersection
100000399	6266	1	31.080633	FERNANDINA RD	N	PINEY GROVE RD & FERNANDINA RD
100000399	6266	2	29.941563			
100000399	6266	3	29.904046			
100000399	6266	4	32.300717			
100000399	6266	5	28.853302			
100000399	6266	6	31.493942			
100000399	6266	7	32.542986			
100000399	6266	8	29.30095			
100000399	6266	9	28.550918			
100000399	6266	10	30.843751			
100000399	6662	1	36.779881	PINEY GROVE RD	E	PINEY GROVE RD & FERNANDINA RD
100000399	6662	2	37.457813			
100000399	6662	3	41.044621			
100000399	6662	4	38.091047			
100000399	6662	5	39.068066			
100000399	6662	6	42.975034			
100000399	6662	7	39.6162			
100000399	6662	8	40.733892			
100000399	6662	9	44.897485			
100000399	6662	10	40.444586			
100000401	5093	1	10.246261	LAKE MURRAY BLVD	E	KINLEY RD, LAKE MURRAY BLVD & PARKRIDGE DR
100000401	5093	2	13.270164			
100000401	5093	3	8.679674			
100000401	5093	4	11.908405			
100000401	5093	5	10.135674			
100000401	5093	6	8.799088			
100000401	5093	7	21.922196			
100000401	5093	8	15.540859			
100000401	5093	9	14.435114			
100000401	5093	10	9.38724			
100000401	6276	1	26.446677	KINLEY RD	S	KINLEY RD, LAKE MURRAY BLVD & PARKRIDGE DR
100000401	6276	2	28.957179			
100000401	6276	3	21.792092			
100000401	6276	4	22.724483			
100000401	6276	5	22.675585			
100000401	6276	6	19.290118			
100000401	6276	7	80.599654			
100000401	6276	8	32.74826			
100000401	6276	9	24.842007			
100000401	6276	10	22.883727			
100000401	6313	1	11.502689	LAKE MURRAY BLVD	W	KINLEY RD, LAKE MURRAY BLVD & PARKRIDGE DR
100000401	6313	2	17.058678			
100000401	6313	3	13.200799			
100000401	6313	4	16.952734			
100000401	6313	5	10.934799			
100000401	6313	6	19.662009			
100000401	6313	7	12.767476			
100000401	6313	8	15.092449			
100000401	6313	9	15.871813			
100000401	6313	10	11.985767			
100000401	6745	1	55.523171	PARKRIDGE DR	N	KINLEY RD, LAKE MURRAY BLVD & PARKRIDGE DR
100000401	6745	2	45.33095			
100000401	6745	3	95.965977			
100000401	6745	4	45.617318			
100000401	6745	5	44.347617			
100000401	6745	6	42.808531			
100000401	6745	7	58.155634			
100000401	6745	8	53.060253			
100000401	6745	9	72.815573			
100000401	6745	10	56.512098			
100000446	6732	1	0	RAMP	SW	RAMP
100000446	6732	2	0			
100000446	6732	3	0			
100000446	6732	4	0			
100000446	6732	5	0			
100000446	6732	6	0			
100000446	6732	7	0			
100000446	6732	8	0			
100000446	6732	9	0			
100000446	6732	10	0			
100000446	6779	1	0	RAMP	S	RAMP
100000446	6779	2	0			
100000446	6779	3	0			
100000446	6779	4	0			
100000446	6779	5	0			
100000446	6779	6	0			
100000446	6779	7	0			
100000446	6779	8	0			
100000446	6779	9	0			
100000446	6779	10	0			
100000520	3345	1		I-26 WB EXIT 102 ON RAMP	N	I-26 WB EXIT 102 ON RAMP
100000520	3345	2				
100000520	3345	3				
100000520	3345	4				
100000520	3345	5				
100000520	3345	6				
100000520	3345	7				
100000520	3345	8				
100000520	3345	9				
100000520	3345	10				
100000520	3350	1	0	I-26 WB EXIT 102 ON RAMP	N	I-26 WB EXIT 102 ON RAMP
100000520	3350	2	0			
100000520	3350	3	0			
100000520	3350	4	0			
100000520	3350	5	0			
100000520	3350	6	0			
100000520	3350	7	0			
100000520	3350	8	0			
100000520	3350	9	0			
100000520	3350	10	0			
100000702	4343	1	0	RAMP	SW	RAMP & 6587 (E)
100000702	4343	2	0			
100000702	4343	3	0			
100000702	4343	4	0			
100000702	4343	5	0			
100000702	4343	6	0			
100000702	4343	7	0			
100000702	4343	8	0			
100000702	4343	9	0			
100000702	4343	10	0			
100000702	6587	1	0		W	RAMP & 6587 (E)
100000702	6587	2	0			
100000702	6587	3	0			
100000702	6587	4	0			
100000702	6587	5	0			

Node	Superlink	Run	Average Control Delay	Approach Street Name	Direction	Intersection
100000702	6587	6	0			
100000702	6587	7	0			
100000702	6587	8	0			
100000702	6587	9	0			
100000702	6587	10	0			
100000897	5134	1	0	W COLONIAL LIFE BLVD	NW	COLONIAL LIFE BLVD W & W COLONIAL LIFE BLVD
100000897	5134	2	0			
100000897	5134	3	5.095498			
100000897	5134	4	0			
100000897	5134	5	1.538596			
100000897	5134	6	0.551726			
100000897	5134	7	2.935111			
100000897	5134	8	0			
100000897	5134	9	1.817657			
100000897	5134	10	0			
100000897	6471	1	2.979138	COLONIAL LIFE BLVD W	S	COLONIAL LIFE BLVD W & W COLONIAL LIFE BLVD
100000897	6471	2	2.969352			
100000897	6471	3	2.663633			
100000897	6471	4	2.904228			
100000897	6471	5	2.948604			
100000897	6471	6	2.015615			
100000897	6471	7	2.853871			
100000897	6471	8	2.740088			
100000897	6471	9	2.774388			
100000897	6471	10	2.383975			
100000897	6545	1	1.132599	COLONIAL LIFE BLVD W	NE	COLONIAL LIFE BLVD W & W COLONIAL LIFE BLVD
100000897	6545	2	1.493067			
100000897	6545	3	1.287082			
100000897	6545	4	1.361253			
100000897	6545	5	1.712829			
100000897	6545	6	1.054125			
100000897	6545	7	1.301843			
100000897	6545	8	1.426595			
100000897	6545	9	1.504254			
100000897	6545	10	1.320939			
100000898	5125	1	1.564324	BUSH RIVER RD	W	BUSH RIVER RD
100000898	5125	2	1.68964			
100000898	5125	3	1.676155			
100000898	5125	4	2.073364			
100000898	5125	5	1.803284			
100000898	5125	6	2.246549			
100000898	5125	7	2.234142			
100000898	5125	8	2.619973			
100000898	5125	9	2.133162			
100000898	5125	10	1.871793			
100000898	5130	1	20.541184	BUSH RIVER RD	N	BUSH RIVER RD
100000898	5130	2	20.734315			
100000898	5130	3	22.925815			
100000898	5130	4	22.415505			
100000898	5130	5	27.05591			
100000898	5130	6	24.632592			
100000898	5130	7	21.272958			
100000898	5130	8	21.31587			
100000898	5130	9	24.745386			
100000898	5130	10	21.036838			
100000898	5131	1	3.321021	BUSH RIVER RD	E	BUSH RIVER RD
100000898	5131	2	4.063098			
100000898	5131	3	3.520949			
100000898	5131	4	3.728102			
100000898	5131	5	3.444033			
100000898	5131	6	3.923575			
100000898	5131	7	3.888335			
100000898	5131	8	3.712992			
100000898	5131	9	4.245042			
100000898	5131	10	3.18268			
100000899	6105	1	0	BURNING TREE RD	S	I-26 WB TO BURNING TREE RD EXIT 106 OFF RAMP & BURNING TREE RD
100000899	6105	2	0			
100000899	6105	3	0			
100000899	6105	4	0			
100000899	6105	5	0			
100000899	6105	6	0			
100000899	6105	7	0			
100000899	6105	8	0			
100000899	6105	9	0			
100000899	6105	10	0			
100000899	6106	1	0	BURNING TREE RD	N	I-26 WB TO BURNING TREE RD EXIT 106 OFF RAMP & BURNING TREE RD
100000899	6106	2	0			
100000899	6106	3	0			
100000899	6106	4	0			
100000899	6106	5	0			
100000899	6106	6	0			
100000899	6106	7	0			
100000899	6106	8	0			
100000899	6106	9	0			
100000899	6106	10	0			
100000902	4292	1	26.963041	RAMP	NE	SUNSET BLVD & RAMP
100000902	4292	2	25.459688			
100000902	4292	3	30.646021			
100000902	4292	4	22.983781			
100000902	4292	5	23.265503			
100000902	4292	6	30.551751			
100000902	4292	7	25.266297			
100000902	4292	8	24.195673			
100000902	4292	9	24.100582			
100000902	4292	10	23.838578			
100000902	4947	1	11.732135	SUNSET BLVD	W	SUNSET BLVD & RAMP
100000902	4947	2	11.266415			
100000902	4947	3	12.263985			
100000902	4947	4	13.230093			
100000902	4947	5	12.09463			
100000902	4947	6	11.688199			
100000902	4947	7	10.495945			
100000902	4947	8	10.824784			
100000902	4947	9	17.429552			
100000902	4947	10	10.799817			
100000902	4951	1	0	SUNSET BLVD	E	SUNSET BLVD & RAMP
100000902	4951	2	0			
100000902	4951	3	0			
100000902	4951	4	0			
100000902	4951	5	0			
100000902	4951	6	0			
100000902	4951	7	0			
100000902	4951	8	0			
100000902	4951	9	0			
100000902	4951	10	0			

Node	Superlink	Run	Average Control Delay	Approach Street Name	Direction	Intersection
100000903	4289	1	50.543588	RAMP	NW	RAMP & SUNSET BLVD
100000903	4289	2	53.412869			
100000903	4289	3	52.43415			
100000903	4289	4	51.871266			
100000903	4289	5	51.937434			
100000903	4289	6	50.584275			
100000903	4289	7	48.688158			
100000903	4289	8	50.733812			
100000903	4289	9	52.249328			
100000903	4289	10	52.451459			
100000903	4298	1	24.536299	RAMP	SE	RAMP & SUNSET BLVD
100000903	4298	2	25.200326			
100000903	4298	3	25.155695			
100000903	4298	4	25.592785			
100000903	4298	5	24.066763			
100000903	4298	6	25.326898			
100000903	4298	7	23.777007			
100000903	4298	8	24.998582			
100000903	4298	9	24.810481			
100000903	4298	10	24.101822			
100000903	4950	1	14.707426	SUNSET BLVD	E	RAMP & SUNSET BLVD
100000903	4950	2	14.408268			
100000903	4950	3	13.476138			
100000903	4950	4	14.015108			
100000903	4950	5	14.143749			
100000903	4950	6	13.847756			
100000903	4950	7	14.075033			
100000903	4950	8	14.22571			
100000903	4950	9	13.790815			
100000903	4950	10	14.738819			
100000903	4951	1	30.997966	SUNSET BLVD	W	RAMP & SUNSET BLVD
100000903	4951	2	30.573717			
100000903	4951	3	29.823412			
100000903	4951	4	29.031986			
100000903	4951	5	28.539507			
100000903	4951	6	30.513558			
100000903	4951	7	29.380851			
100000903	4951	8	31.022653			
100000903	4951	9	30.640623			
100000903	4951	10	29.232384			

2040 Build RRPA PM

Node	Superlink	Run	Average Control Delay	Approach Street Name	Direction	Intersection
4	5081	1	11.44778	BROAD RIVER RD	W	WESTERN LN & BROAD RIVER RD
4	5081	2	12.922939			
4	5081	3	12.0			
4	5081	4	12.3			
4	5081	5	14.8			
4	5081	6	11.957746			
4	5081	7	10.887024			
4	5081	8	12.8			
4	5081	9	13.9			
4	5081	10	14.4			
4	6465	1	12.68395	WESTERN LN	S	WESTERN LN & BROAD RIVER RD
4	6465	2	12.088797			
4	6465	3	10.7			
4	6465	4	11.6			
4	6465	5	11.520571			
4	6465	6	12.314321			
4	6465	7	11.5			
4	6465	8	13.3			
4	6465	9	10.9			
4	6465	10	12.18339			
4	6466	1	5.762849	BROAD RIVER RD	E	WESTERN LN & BROAD RIVER RD
4	6466	2	6.3			
4	6466	3	6.5			
4	6466	4	6.440018			
4	6466	5	6.177042			
4	6466	6	6.6			
4	6466	7	6.1			
4	6466	8	6.185215			
4	6466	9	6.575394			
4	6466	10	5.9			
4	6467	1	25.7	WESTERN LN	N	WESTERN LN & BROAD RIVER RD
4	6467	2	21.3			
4	6467	3	20.11742			
4	6467	4	22.679798			
4	6467	5	18.3			
4	6467	6	20.7			
4	6467	7	19.5			
4	6467	8	20.262926			
4	6467	9	19.803461			
4	6467	10	22.9			
40	6624	1	32.8	I-26 EB EXIT 106 OFF RAMP	E	I-26 EB EXIT 106 OFF RAMP, ST ANDREWS RD, I-26 WB TO BURNING TREE RD AND TO ST ANDREWS RD OFF RAMP,
40	6624	2	31.773754			
40	6624	3	28.72852			
40	6624	4	33.2			
40	6624	5	29.4			
40	6624	6	30.5			
40	6624	7	27.976452			
40	6624	8	30.935574			
40	6624	9	35.1			
40	6624	10	29.1			
40	6734	1	41.085258	ST ANDREWS RD	E	I-26 EB EXIT 106 OFF RAMP, ST ANDREWS RD, I-26 WB TO BURNING TREE RD AND TO ST ANDREWS RD OFF RAMP,
40	6734	2	42.116285			
40	6734	3	42.6			
40	6734	4	37.3			
40	6734	5	48.7			
40	6734	6	42.947995			
40	6734	7	42.594337			
40	6734	8	48.0			
40	6734	9	43.0			
40	6734	10	46.456721			
40	6737	1	37.860805	ST ANDREWS RD	W	I-26 EB EXIT 106 OFF RAMP, ST ANDREWS RD, I-26 WB TO BURNING TREE RD AND TO ST ANDREWS RD OFF RAMP,
40	6737	2	36.0			
40	6737	3	34.8			
40	6737	4	37.4			
40	6737	5	33.4			
40	6737	6	34.961929			
40	6737	7	34.40818			
40	6737	8	31.4			
40	6737	9	35.9			
40	6737	10	33.6			
40	6775	1	39.283777	I-26 WB TO BURNING TREE RD AND TO ST AND	W	I-26 EB EXIT 106 OFF RAMP, ST ANDREWS RD, I-26 WB TO BURNING TREE RD AND TO ST ANDREWS RD OFF RAMP,
40	6775	2	44.458899			
40	6775	3	38.4			
40	6775	4	36.7			
40	6775	5	39.3			
40	6775	6	50.271988			
40	6775	7	40.812961			
40	6775	8	38.6			
40	6775	9	39.8			
40	6775	10	38.7			
52	6750	1	13.063985	BUSH RIVER RD	E	BUSH RIVER RD, 6778 (SE) & 6777 (E)
52	6750	2	13.23838			
52	6750	3	14.2			
52	6750	4	12.8			
52	6750	5	13.4			
52	6750	6	12.834299			
52	6750	7	13.705341			
52	6750	8	13.8			
52	6750	9	13.1			
52	6750	10	13.0			
52	6778	1	26.752542		NW	BUSH RIVER RD, 6778 (SE) & 6777 (E)
52	6778	2	27.257368			
52	6778	3	24.8			
52	6778	4	29.4			
52	6778	5	26.9			
52	6778	6	26.921433			
52	6778	7	28.66701			
52	6778	8	26.1			
52	6778	9	29.3			
52	6778	10	27.2			
54	6057	1	18.332856	BROAD RIVER RD	SE	EXIT 65 RAMP TO US 176, BROAD RIVER RD & RAMP
54	6057	2	2.452301			
54	6057	3	17.3			
54	6057	4	12.824612			
54	6057	5	6.538265			
54	6057	6	6.1			
54	6057	7	1.2			
54	6057	8	5.850238			
54	6057	9	2.83892			
54	6057	10	1.1			
54	6575	1	62.6	EXIT 65 RAMP TO US 176	W	EXIT 65 RAMP TO US 176, BROAD RIVER RD & RAMP
54	6575	2	90.556491			
54	6575	3	119.163259			
54	6575	4	96.1			
54	6575	5	109.4			

Node	Superlink	Run	Average Control Delay	Approach Street Name	Direction	Intersection
54	6575	6	35.6			
54	6575	7	71.972544			
54	6575	8	107.745508			
54	6575	9	86.5			
54	6575	10	85.0			
54	6580	1	0	BROAD RIVER RD	NW	EXIT 65 RAMP TO US 176, BROAD RIVER RD & RAMP
54	6580	2	0			
54	6580	3	0.0			
54	6580	4	0.0			
54	6580	5	0.0			
54	6580	6	0			
54	6580	7	0			
54	6580	8	0.0			
54	6580	9	0.0			
54	6580	10	0.0			
65	2067	1	0	RAMP	N	6564 (W) & RAMP
65	2067	2	0			
65	2067	3	0.0			
65	2067	4	0.0			
65	2067	5	0.0			
65	2067	6	0			
65	2067	7	0			
65	2067	8	0.0			
65	2067	9	0.0			
65	2067	10	0.0			
65	6564	1	0		NE	6564 (W) & RAMP
65	6564	2	0			
65	6564	3	0.0			
65	6564	4	0.0			
65	6564	5	0.0			
65	6564	6	0			
65	6564	7	0			
65	6564	8	0.0			
65	6564	9	0.0			
65	6564	10	0			
71	6659	1	3.174864	PINEY GROVE RD	E	PINEY GROVE RD, I-26 EB EXIT 104 OFF RAMP & I-26 EB EXIT 104 ON RAMP
71	6659	2	3.0			
71	6659	3	3.8			
71	6659	4	2.8			
71	6659	5	3.30993			
71	6659	6	2.926487			
71	6659	7	3.2			
71	6659	8	2.5			
71	6659	9	3.741024			
71	6659	10	2.22634			
71	6660	1	0.0	PINEY GROVE RD	W	PINEY GROVE RD, I-26 EB EXIT 104 OFF RAMP & I-26 EB EXIT 104 ON RAMP
71	6660	2	0.0			
71	6660	3	0			
71	6660	4	0.000001			
71	6660	5	0.0			
71	6660	6	0.002695			
71	6660	7	0.00093			
71	6660	8	0.0			
71	6660	9	0.0			
71	6660	10	0.000002			
74	6579	1	0		NE	6579 (SW), 6581 (W) & RAMP
74	6579	2	0.0			
74	6579	3	0.0			
74	6579	4	0.0			
74	6579	5	0			
74	6579	6	0			
74	6579	7	0.0			
74	6579	8	0.0			
74	6579	9	0			
74	6579	10	0			
74	6581	1	0.0		NE	6579 (SW), 6581 (W) & RAMP
74	6581	2	0.0			
74	6581	3	0			
74	6581	4	0			
74	6581	5	0.0			
74	6581	6	0.0			
74	6581	7	0.0			
74	6581	8	0			
74	6581	9	0			
74	6581	10	0			
79	5148	1	14.6	BROAD RIVER RD	NW	6584 (NE), BROAD RIVER RD, 6583 (SW), 6587 (W) & 6581 (E)
79	5148	2	14.1			
79	5148	3	14.39723			
79	5148	4	14.383706			
79	5148	5	14.8			
79	5148	6	13.8			
79	5148	7	13.7			
79	5148	8	14.368983			
79	5148	9	14.309501			
79	5148	10	13.9			
79	6580	1	51.0	BROAD RIVER RD	SE	6584 (NE), BROAD RIVER RD, 6583 (SW), 6587 (W) & 6581 (E)
79	6580	2	54.4			
79	6580	3	56.340767			
79	6580	4	47.026653			
79	6580	5	48.213445			
79	6580	6	48.233995			
79	6580	7	43.965539			
79	6580	8	52.545698			
79	6580	9	44.465627			
79	6580	10	43.553541			
79	6583	1	50.95553		N	6584 (NE), BROAD RIVER RD, 6583 (SW), 6587 (W) & 6581 (E)
79	6583	2	51.273808			
79	6583	3	46.470856			
79	6583	4	42.076302			
79	6583	5	43.199247			
79	6583	6	52.437511			
79	6583	7	49.744658			
79	6583	8	47.9903			
79	6583	9	52.350165			
79	6583	10	51.459671			
79	6584	1	56.100351		S	6584 (NE), BROAD RIVER RD, 6583 (SW), 6587 (W) & 6581 (E)
79	6584	2	54.825458			
79	6584	3	53.402436			
79	6584	4	57.103057			
79	6584	5	55.350441			
79	6584	6	53.342066			
79	6584	7	57.870445			
79	6584	8	53.066529			
79	6584	9	55.779327			
79	6584	10	53.34453			

Node	Superlink	Run	Average Control Delay	Approach Street Name	Direction	Intersection
85	6627	1	0	I-26 WB EXIT 106 ON RAMP	N	I-26 WB EXIT 106 ON RAMP
85	6627	2	0			
85	6627	3	0			
85	6627	4	0			
85	6627	5	0			
85	6627	6	0			
85	6627	7	0			
85	6627	8	0			
85	6627	9	0			
85	6627	10	0			
85	6652	1	0.409945	I-26 WB EXIT 106 ON RAMP	NW	I-26 WB EXIT 106 ON RAMP
85	6652	2	0.498486			
85	6652	3	0.099301			
85	6652	4	0			
85	6652	5	0			
85	6652	6	0.276535			
85	6652	7	0.570091			
85	6652	8	0.127537			
85	6652	9	0			
85	6652	10	0			
99	6647	1	44.764304	I-26 WB EXIT 103 OFF RAMP	NW	I-26 WB EXIT 103 OFF RAMP, HARBISON BLVD, I-26 WB EXIT 103 ON RAMP & 6770 (SW)
99	6647	2	47.009566			
99	6647	3	47.580388			
99	6647	4	49.587652			
99	6647	5	43.689262			
99	6647	6	49.861564			
99	6647	7	43.738876			
99	6647	8	45.635387			
99	6647	9	48.388366			
99	6647	10	48.98358			
99	6719	1	14.266815	HARBISON BLVD	SW	I-26 WB EXIT 103 OFF RAMP, HARBISON BLVD, I-26 WB EXIT 103 ON RAMP & 6770 (SW)
99	6719	2	16.072614			
99	6719	3	12.831175			
99	6719	4	16.314841			
99	6719	5	12.322581			
99	6719	6	16.645839			
99	6719	7	13.806761			
99	6719	8	14.405893			
99	6719	9	17.851198			
99	6719	10	15.363662			
99	6770	1	73.162356		NE	I-26 WB EXIT 103 OFF RAMP, HARBISON BLVD, I-26 WB EXIT 103 ON RAMP & 6770 (SW)
99	6770	2	85.613489			
99	6770	3	85.546835			
99	6770	4	80.280447			
99	6770	5	111.289098			
99	6770	6	74.694051			
99	6770	7	87.089824			
99	6770	8	114.099344			
99	6770	9	63.702141			
99	6770	10	90.61452			
104	3211	1	27.927761	I-26 EB EXIT 103 OFF RAMP	SE	HARBISON BLVD, I-26 EB EXIT 103 OFF RAMP, 6770 (NE) & I-26 EB EXIT 103 ON RAMP
104	3211	2	26.287576			
104	3211	3	28.631176			
104	3211	4	25.555427			
104	3211	5	33.144477			
104	3211	6	23.841342			
104	3211	7	27.902394			
104	3211	8	28.652103			
104	3211	9	28.464785			
104	3211	10	28.629026			
104	6717	1	11.166369	HARBISON BLVD	NE	HARBISON BLVD, I-26 EB EXIT 103 OFF RAMP, 6770 (NE) & I-26 EB EXIT 103 ON RAMP
104	6717	2	22.455093			
104	6717	3	11.448761			
104	6717	4	25.490135			
104	6717	5	30.024573			
104	6717	6	17.212794			
104	6717	7	30.782555			
104	6717	8	34.076549			
104	6717	9	14.659544			
104	6717	10	32.844572			
104	6770	1	6.765651		SW	HARBISON BLVD, I-26 EB EXIT 103 OFF RAMP, 6770 (NE) & I-26 EB EXIT 103 ON RAMP
104	6770	2	6.687514			
104	6770	3	6.854528			
104	6770	4	5.969865			
104	6770	5	8.268098			
104	6770	6	7.140503			
104	6770	7	7.570301			
104	6770	8	7.403612			
104	6770	9	8.597454			
104	6770	10	9.551581			
107	3243	1	31.950752	RAMP	NW	RAMP, COLONIAL LIFE BLVD W & 6681 (NW)
107	3243	2	26.057186			
107	3243	3	25.814379			
107	3243	4	28.703592			
107	3243	5	26.722913			
107	3243	6	25.798794			
107	3243	7	31.598417			
107	3243	8	27.357608			
107	3243	9	36.138596			
107	3243	10	30.871241			
107	6545	1	14.084015	COLONIAL LIFE BLVD W	SW	RAMP, COLONIAL LIFE BLVD W & 6681 (NW)
107	6545	2	17.134001			
107	6545	3	13.808169			
107	6545	4	17.481405			
107	6545	5	16.33373			
107	6545	6	18.991059			
107	6545	7	16.625049			
107	6545	8	17.535971			
107	6545	9	20.060863			
107	6545	10	15.411982			
107	6678	1	2.937656	COLONIAL LIFE BLVD W	NE	RAMP, COLONIAL LIFE BLVD W & 6681 (NW)
107	6678	2	1.626597			
107	6678	3	1.179388			
107	6678	4	1.679075			
107	6678	5	1.343248			
107	6678	6	2.442636			
107	6678	7	3.97427			
107	6678	8	2.164531			
107	6678	9	2.593496			
107	6678	10	0.559126			
108	6676	1	18.422689		SE	COLONIAL LIFE BLVD W, 6676 (NW) & 6688 (SE)
108	6676	2	20.255837			
108	6676	3	16.911365			
108	6676	4	20.231429			
108	6676	5	19.892017			

Node	Superlink	Run	Average Control Delay	Approach Street Name	Direction	Intersection
108	6676	6	18.449741			
108	6676	7	16.685727			
108	6676	8	19.159133			
108	6676	9	17.741859			
108	6676	10	18.23429			
108	6678	1	32.147524	COLONIAL LIFE BLVD W	SW	COLONIAL LIFE BLVD W, 6676 (NW) & 6688 (SE)
108	6678	2	24.800028			
108	6678	3	30.546885			
108	6678	4	23.453383			
108	6678	5	25.130031			
108	6678	6	31.52863			
108	6678	7	35.278939			
108	6678	8	25.007049			
108	6678	9	30.123204			
108	6678	10	26.951028			
118	2071	1	20.836938	RAMP	W	BUSH RIVER RD & RAMP
118	2071	2	19.465666			
118	2071	3	21.722522			
118	2071	4	19.313009			
118	2071	5	22.302402			
118	2071	6	18.472427			
118	2071	7	20.3868			
118	2071	8	22.164786			
118	2071	9	19.735465			
118	2071	10	18.990199			
118	6750	1	0	BUSH RIVER RD	NW	BUSH RIVER RD & RAMP
118	6750	2	0			
118	6750	3	0			
118	6750	4	0			
118	6750	5	0			
118	6750	6	0			
118	6750	7	0			
118	6750	8	0			
118	6750	9	0			
118	6750	10	0			
118	6780	1	7.516399	BUSH RIVER RD	SE	BUSH RIVER RD & RAMP
118	6780	2	3.479815			
118	6780	3	3.369557			
118	6780	4	9.716982			
118	6780	5	13.664659			
118	6780	6	7.07725			
118	6780	7	2.548204			
118	6780	8	3.314124			
118	6780	9	2.998273			
118	6780	10	14.633238			
120	6740	1	12.902032	BUSH RIVER RD	W	BUSH RIVER RD & 6741 (NE)
120	6740	2	14.129071			
120	6740	3	15.612757			
120	6740	4	15.82143			
120	6740	5	16.444393			
120	6740	6	13.052906			
120	6740	7	14.621829			
120	6740	8	16.104607			
120	6740	9	13.765433			
120	6740	10	14.149052			
120	6741	1	39.740509		SW	BUSH RIVER RD & 6741 (NE)
120	6741	2	37.115369			
120	6741	3	32.912595			
120	6741	4	33.492608			
120	6741	5	33.78711			
120	6741	6	34.980241			
120	6741	7	34.966576			
120	6741	8	33.069625			
120	6741	9	31.575549			
120	6741	10	38.064591			
120	6781	1	10.766925	BUSH RIVER RD	E	BUSH RIVER RD & 6741 (NE)
120	6781	2	11.501725			
120	6781	3	11.115127			
120	6781	4	11.572437			
120	6781	5	11.690975			
120	6781	6	9.8334			
120	6781	7	12.128693			
120	6781	8	12.022047			
120	6781	9	10.922225			
120	6781	10	11.327464			
123	3328	1	0	I-26 EB EXIT 103 ON RAMP	SE	I-26 EB EXIT 103 ON RAMP & 6718 (W)
123	3328	2	0			
123	3328	3	0			
123	3328	4	0			
123	3328	5	0			
123	3328	6	0			
123	3328	7	0			
123	3328	8	0			
123	3328	9	0			
123	3328	10	0			
127	5116	1	26.467098	ST ANDREWS RD	E	WOODLAND HILLS RD, ST ANDREWS RD, I-26 EB EXIT 106 OFF RAMP & 6772 (NE)
127	5116	2	23.93239			
127	5116	3	30.016689			
127	5116	4	25.580104			
127	5116	5	29.037864			
127	5116	6	27.45334			
127	5116	7	21.594994			
127	5116	8	23.165952			
127	5116	9	24.333986			
127	5116	10	25.200975			
127	5119	1	13.815263	WOODLAND HILLS RD	N	WOODLAND HILLS RD, ST ANDREWS RD, I-26 EB EXIT 106 OFF RAMP & 6772 (NE)
127	5119	2	12.734427			
127	5119	3	12.779743			
127	5119	4	13.83358			
127	5119	5	13.238328			
127	5119	6	13.012129			
127	5119	7	13.544354			
127	5119	8	13.225296			
127	5119	9	12.763738			
127	5119	10	12.628171			
127	6736	1	4.216595	ST ANDREWS RD	W	WOODLAND HILLS RD, ST ANDREWS RD, I-26 EB EXIT 106 OFF RAMP & 6772 (NE)
127	6736	2	3.640205			
127	6736	3	4.73899			
127	6736	4	4.206341			
127	6736	5	4.404479			
127	6736	6	3.868648			
127	6736	7	2.500935			
127	6736	8	3.813353			
127	6736	9	2.689736			
127	6736	10	3.829361			

Node	Superlink	Run	Average Control Delay	Approach Street Name	Direction	Intersection
127	6773	1	15.091903	I-26 EB EXIT 106 OFF RAMP	S	WOODLAND HILLS RD, ST ANDREWS RD, I-26 EB EXIT 106 OFF RAMP & 6772 (NE)
127	6773	2	16.584498			
127	6773	3	15.464389			
127	6773	4	14.615583			
127	6773	5	13.454606			
127	6773	6	14.556698			
127	6773	7	13.848423			
127	6773	8	14.682483			
127	6773	9	14.62615			
127	6773	10	14.012886			
134	6563	1	24.244442		S	6563 (N), 6777 (W) & BUSH RIVER RD
134	6563	2	26.879636			
134	6563	3	22.631556			
134	6563	4	25.735928			
134	6563	5	22.872821			
134	6563	6	27.433279			
134	6563	7	23.950783			
134	6563	8	23.335703			
134	6563	9	22.257626			
134	6563	10	24.341294			
134	6777	1	0		E	6563 (N), 6777 (W) & BUSH RIVER RD
134	6777	2	0			
134	6777	3	0			
134	6777	4	0			
134	6777	5	0			
134	6777	6	0			
134	6777	7	0			
134	6777	8	0			
134	6777	9	0			
134	6777	10	0			
136	6555	1	14.34922	EXIT 63 RAMP TO BUSH RIVER RD	E	EXIT 63 RAMP TO BUSH RIVER RD, BUSH RIVER RD & RAMP
136	6555	2	16.278728			
136	6555	3	16.582812			
136	6555	4	15.874238			
136	6555	5	16.349524			
136	6555	6	13.796012			
136	6555	7	13.093492			
136	6555	8	15.463528			
136	6555	9	13.380339			
136	6555	10	14.94019			
136	6739	1	0	BUSH RIVER RD	SE	EXIT 63 RAMP TO BUSH RIVER RD, BUSH RIVER RD & RAMP
136	6739	2	0			
136	6739	3	0			
136	6739	4	0			
136	6739	5	0			
136	6739	6	0			
136	6739	7	0			
136	6739	8	0			
136	6739	9	0			
136	6739	10	0			
136	6781	1	4.183403	BUSH RIVER RD	NW	EXIT 63 RAMP TO BUSH RIVER RD, BUSH RIVER RD & RAMP
136	6781	2	6.953992			
136	6781	3	4.55727			
136	6781	4	5.666179			
136	6781	5	5.352055			
136	6781	6	4.766215			
136	6781	7	4.069117			
136	6781	8	4.746038			
136	6781	9	4.602616			
136	6781	10	4.326196			
141	6751	1	23.968364		NE	BUSH RIVER RD, 6752 (NE) & 6751 (SW)
141	6751	2	59.690007			
141	6751	3	22.402943			
141	6751	4	30.464975			
141	6751	5	39.502339			
141	6751	6	23.463711			
141	6751	7	28.313854			
141	6751	8	22.557796			
141	6751	9	22.667767			
141	6751	10	42.777084			
141	6752	1	44.525084		SW	BUSH RIVER RD, 6752 (NE) & 6751 (SW)
141	6752	2	43.941033			
141	6752	3	42.186317			
141	6752	4	25.98585			
141	6752	5	48.997356			
141	6752	6	46.703552			
141	6752	7	36.045766			
141	6752	8	33.739791			
141	6752	9	40.785366			
141	6752	10	40.159697			
141	6753	1	17.028811	BUSH RIVER RD	SE	BUSH RIVER RD, 6752 (NE) & 6751 (SW)
141	6753	2	32.488155			
141	6753	3	10.232252			
141	6753	4	13.405711			
141	6753	5	46.358722			
141	6753	6	11.782402			
141	6753	7	13.21957			
141	6753	8	15.117839			
141	6753	9	11.827408			
141	6753	10	35.093052			
141	6780	1	8.36732	BUSH RIVER RD	NW	BUSH RIVER RD, 6752 (NE) & 6751 (SW)
141	6780	2	8.303411			
141	6780	3	7.368378			
141	6780	4	7.068836			
141	6780	5	8.770402			
141	6780	6	6.441098			
141	6780	7	6.895318			
141	6780	8	9.139654			
141	6780	9	8.0006			
141	6780	10	7.457057			
150	6565	1	42.304549	BUSH RIVER RD	SE	BUSH RIVER RD & 6782 (W)
150	6565	2	38.666855			
150	6565	3	40.638129			
150	6565	4	40.408586			
150	6565	5	39.969806			
150	6565	6	40.733927			
150	6565	7	41.330671			
150	6565	8	39.060477			
150	6565	9	40.865205			
150	6565	10	40.403089			
150	6739	1	7.300051	BUSH RIVER RD	W	BUSH RIVER RD & 6782 (W)
150	6739	2	7.808267			
150	6739	3	7.338272			
150	6739	4	7.502797			
150	6739	5	7.588373			

Node	Superlink	Run	Average Control Delay	Approach Street Name	Direction	Intersection
150	6739	6	6.861764			
150	6739	7	7.033765			
150	6739	8	7.742789			
150	6739	9	7.777567			
150	6739	10	7.082319			
151	6554	1	30.979902		NW	6782 (E), 6554 (SE) & BUSH RIVER RD
151	6554	2	29.906093			
151	6554	3	28.10728			
151	6554	4	27.486539			
151	6554	5	30.530629			
151	6554	6	29.782333			
151	6554	7	29.73439			
151	6554	8	26.828815			
151	6554	9	29.836349			
151	6554	10	29.574711			
151	6782	1	0		W	6782 (E), 6554 (SE) & BUSH RIVER RD
151	6782	2	0			
151	6782	3	0			
151	6782	4	0			
151	6782	5	0			
151	6782	6	0			
151	6782	7	0			
151	6782	8	0			
151	6782	9	0			
151	6782	10	0			
100000093	4299	1	20.670622	RAMP	SW	SUNSET BLVD & RAMP
100000093	4299	2	21.35118			
100000093	4299	3	22.406402			
100000093	4299	4	23.153841			
100000093	4299	5	22.60551			
100000093	4299	6	22.847733			
100000093	4299	7	22.576831			
100000093	4299	8	22.740763			
100000093	4299	9	23.68433			
100000093	4299	10	21.886424			
100000093	4949	1	19.419564	SUNSET BLVD	E	SUNSET BLVD & RAMP
100000093	4949	2	20.288756			
100000093	4949	3	20.948696			
100000093	4949	4	20.139179			
100000093	4949	5	19.776639			
100000093	4949	6	20.345141			
100000093	4949	7	20.366786			
100000093	4949	8	18.721157			
100000093	4949	9	21.128655			
100000093	4949	10	20.162506			
100000093	4950	1	0.002195	SUNSET BLVD	W	SUNSET BLVD & RAMP
100000093	4950	2	0.000862			
100000093	4950	3	0.002648			
100000093	4950	4	0.002607			
100000093	4950	5	0.003036			
100000093	4950	6	0.002196			
100000093	4950	7	0.002329			
100000093	4950	8	0.002899			
100000093	4950	9	0.002715			
100000093	4950	10	0.002998			
100000120	5030	1	73.594171	SUNSET BLVD	W	CORLEY MILL RD, SUNSET BLVD & GINNY LN
100000120	5030	2	69.837773			
100000120	5030	3	66.006055			
100000120	5030	4	69.657461			
100000120	5030	5	67.957214			
100000120	5030	6	74.061316			
100000120	5030	7	67.833953			
100000120	5030	8	67.852558			
100000120	5030	9	69.549734			
100000120	5030	10	69.853613			
100000120	5352	1	568.590633	CORLEY MILL RD	S	CORLEY MILL RD, SUNSET BLVD & GINNY LN
100000120	5352	2	578.488431			
100000120	5352	3	512.280897			
100000120	5352	4	578.244504			
100000120	5352	5	595.252491			
100000120	5352	6	656.615368			
100000120	5352	7	624.022382			
100000120	5352	8	556.973712			
100000120	5352	9	539.223893			
100000120	5352	10	550.258016			
100000120	5353	1	69.393239	GINNY LN	N	CORLEY MILL RD, SUNSET BLVD & GINNY LN
100000120	5353	2	60.945692			
100000120	5353	3	67.224389			
100000120	5353	4	72.211861			
100000120	5353	5	62.87109			
100000120	5353	6	64.364045			
100000120	5353	7	59.951365			
100000120	5353	8	68.360385			
100000120	5353	9	64.805542			
100000120	5353	10	63.491906			
100000120	5355	1	27.126627	SUNSET BLVD	E	CORLEY MILL RD, SUNSET BLVD & GINNY LN
100000120	5355	2	25.782798			
100000120	5355	3	25.454028			
100000120	5355	4	28.898428			
100000120	5355	5	30.476808			
100000120	5355	6	28.271219			
100000120	5355	7	25.082468			
100000120	5355	8	27.327514			
100000120	5355	9	28.12652			
100000120	5355	10	27.305282			
100000134	2052	1	23.358895	RAMP	SW	SUNSET BLVD & RAMP
100000134	2052	2	21.432344			
100000134	2052	3	20.186819			
100000134	2052	4	21.091353			
100000134	2052	5	21.291499			
100000134	2052	6	21.756254			
100000134	2052	7	22.983077			
100000134	2052	8	22.681268			
100000134	2052	9	22.929093			
100000134	2052	10	20.812807			
100000134	5022	1	19.700202	SUNSET BLVD	NW	SUNSET BLVD & RAMP
100000134	5022	2	14.777309			
100000134	5022	3	10.139374			
100000134	5022	4	20.275587			
100000134	5022	5	17.989714			
100000134	5022	6	27.442134			
100000134	5022	7	15.710459			
100000134	5022	8	19.727772			
100000134	5022	9	13.459112			
100000134	5022	10	14.127778			

Node	Superlink	Run	Average Control Delay	Approach Street Name	Direction	Intersection
100000134	5030	1	18.706436	SUNSET BLVD	SE	SUNSET BLVD & RAMP
100000134	5030	2	17.384283			
100000134	5030	3	18.240554			
100000134	5030	4	18.502391			
100000134	5030	5	21.002096			
100000134	5030	6	18.718298			
100000134	5030	7	17.060897			
100000134	5030	8	19.12293			
100000134	5030	9	17.796294			
100000134	5030	10	17.782138			
100000135	2039	1	28.770288	RAMP	NE	SUNSET BLVD & RAMP
100000135	2039	2	28.889257			
100000135	2039	3	24.93414			
100000135	2039	4	26.952851			
100000135	2039	5	28.239777			
100000135	2039	6	28.790386			
100000135	2039	7	32.478495			
100000135	2039	8	26.088219			
100000135	2039	9	33.065782			
100000135	2039	10	30.483061			
100000135	5021	1	4.95073	SUNSET BLVD	NW	SUNSET BLVD & RAMP
100000135	5021	2	4.983622			
100000135	5021	3	5.115839			
100000135	5021	4	5.591757			
100000135	5021	5	5.095718			
100000135	5021	6	5.002944			
100000135	5021	7	4.225923			
100000135	5021	8	4.54529			
100000135	5021	9	4.728227			
100000135	5021	10	4.882221			
100000135	5022	1	1.898083	SUNSET BLVD	SE	SUNSET BLVD & RAMP
100000135	5022	2	2.086955			
100000135	5022	3	2.182736			
100000135	5022	4	2.753591			
100000135	5022	5	2.023048			
100000135	5022	6	2.002316			
100000135	5022	7	2.263281			
100000135	5022	8	2.154082			
100000135	5022	9	2.252358			
100000135	5022	10	2.524607			
100000136	5021	1	14.596579	SUNSET BLVD	SE	SUNSET BLVD, CROMER RD & DAVEGA DR
100000136	5021	2	11.82459			
100000136	5021	3	12.116351			
100000136	5021	4	15.144431			
100000136	5021	5	11.736404			
100000136	5021	6	11.357977			
100000136	5021	7	12.422004			
100000136	5021	8	11.024448			
100000136	5021	9	10.610035			
100000136	5021	10	12.670535			
100000136	5362	1	79.1049	CROMER RD	NE	SUNSET BLVD, CROMER RD & DAVEGA DR
100000136	5362	2	78.625728			
100000136	5362	3	75.057882			
100000136	5362	4	70.853337			
100000136	5362	5	71.957407			
100000136	5362	6	76.722397			
100000136	5362	7	90.89293			
100000136	5362	8	83.443059			
100000136	5362	9	79.01697			
100000136	5362	10	81.750261			
100000136	5364	1	32.81126	SUNSET BLVD	NW	SUNSET BLVD, CROMER RD & DAVEGA DR
100000136	5364	2	31.071337			
100000136	5364	3	27.191215			
100000136	5364	4	34.176233			
100000136	5364	5	24.685137			
100000136	5364	6	24.272699			
100000136	5364	7	23.621447			
100000136	5364	8	26.327493			
100000136	5364	9	24.630848			
100000136	5364	10	33.562221			
100000136	6459	1	22.109359	DAVEGA DR	SW	SUNSET BLVD, CROMER RD & DAVEGA DR
100000136	6459	2	21.760528			
100000136	6459	3	16.769879			
100000136	6459	4	15.698615			
100000136	6459	5	15.927197			
100000136	6459	6	19.858057			
100000136	6459	7	14.78356			
100000136	6459	8	18.32976			
100000136	6459	9	19.885804			
100000136	6459	10	18.841586			
100000144	5376	1	18.358307	SUNSET BLVD	E	W. HOSPITAL DR, SUNSET BLVD & SUNSET CT
100000144	5376	2	38.395248			
100000144	5376	3	57.578646			
100000144	5376	4	12.425882			
100000144	5376	5	17.1946			
100000144	5376	6	47.244597			
100000144	5376	7	15.519967			
100000144	5376	8	59.225699			
100000144	5376	9	46.359805			
100000144	5376	10	50.215052			
100000144	6760	1	71.093261	W. HOSPITAL DR	S	W. HOSPITAL DR, SUNSET BLVD & SUNSET CT
100000144	6760	2	59.6666			
100000144	6760	3	83.763612			
100000144	6760	4	57.761431			
100000144	6760	5	56.978875			
100000144	6760	6	62.400063			
100000144	6760	7	55.927781			
100000144	6760	8	65.304313			
100000144	6760	9	60.77433			
100000144	6760	10	110.083995			
100000144	6761	1		SUNSET CT	N	W. HOSPITAL DR, SUNSET BLVD & SUNSET CT
100000144	6761	2				
100000144	6761	3				
100000144	6761	4				
100000144	6761	5				
100000144	6761	6				
100000144	6761	7				
100000144	6761	8				
100000144	6761	9				
100000144	6761	10				
100000144	6762	1	7.216873	SUNSET BLVD	W	W. HOSPITAL DR, SUNSET BLVD & SUNSET CT
100000144	6762	2	6.654425			
100000144	6762	3	6.355322			
100000144	6762	4	6.000445			
100000144	6762	5	5.49272			

Node	Superlink	Run	Average Control Delay	Approach Street Name	Direction	Intersection
100000144	6762	6	6.320681			
100000144	6762	7	6.216252			
100000144	6762	8	5.863771			
100000144	6762	9	6.294965			
100000144	6762	10	5.252218			
100000150	3361	1	44.33236	I-26 EB EXIT 101 OFF RAMP	SW	I-26 EB EXIT 101 OFF RAMP & BROAD RIVER RD
100000150	3361	2	44.777648			
100000150	3361	3	49.350399			
100000150	3361	4	57.645218			
100000150	3361	5	43.590133			
100000150	3361	6	41.737294			
100000150	3361	7	133.073056			
100000150	3361	8	32.817671			
100000150	3361	9	38.71192			
100000150	3361	10	38.826331			
100000150	5071	1	0	BROAD RIVER RD	E	I-26 EB EXIT 101 OFF RAMP & BROAD RIVER RD
100000150	5071	2	0			
100000150	5071	3	0			
100000150	5071	4	0			
100000150	5071	5	0			
100000150	5071	6	0			
100000150	5071	7	0			
100000150	5071	8	0			
100000150	5071	9	0			
100000150	5071	10	0			
100000150	5073	1	0.072233	BROAD RIVER RD	W	I-26 EB EXIT 101 OFF RAMP & BROAD RIVER RD
100000150	5073	2	0.072185			
100000150	5073	3	0.072943			
100000150	5073	4	0.089755			
100000150	5073	5	0.069019			
100000150	5073	6	0.063122			
100000150	5073	7	0.093036			
100000150	5073	8	0.03016			
100000150	5073	9	0.083986			
100000150	5073	10	0.036222			
100000151	5072	1	1.196419	BROAD RIVER RD	E	BROAD RIVER RD & I-26 EB EXIT 101 ON RAMP
100000151	5072	2	0.558069			
100000151	5072	3	0.835344			
100000151	5072	4	1.415449			
100000151	5072	5	0.764453			
100000151	5072	6	0.78549			
100000151	5072	7	0.862977			
100000151	5072	8	1.154649			
100000151	5072	9	1.114666			
100000151	5072	10	0.891885			
100000151	5075	1	6.304758	BROAD RIVER RD	W	BROAD RIVER RD & I-26 EB EXIT 101 ON RAMP
100000151	5075	2	5.586613			
100000151	5075	3	6.201035			
100000151	5075	4	5.867041			
100000151	5075	5	5.023717			
100000151	5075	6	5.704445			
100000151	5075	7	5.539336			
100000151	5075	8	6.360803			
100000151	5075	9	6.046419			
100000151	5075	10	6.124387			
100000163	4947	1	8.837519	SUNSET BLVD	E	MCSWAIN DR, SUNSET BLVD & CHRIS DR
100000163	4947	2	8.401899			
100000163	4947	3	8.63543			
100000163	4947	4	7.58292			
100000163	4947	5	8.433141			
100000163	4947	6	8.816166			
100000163	4947	7	8.911888			
100000163	4947	8	9.748261			
100000163	4947	9	8.746251			
100000163	4947	10	8.314813			
100000163	5388	1	150.775266	SUNSET BLVD	NW	MCSWAIN DR, SUNSET BLVD & CHRIS DR
100000163	5388	2	29.748132			
100000163	5388	3	144.629436			
100000163	5388	4	167.073884			
100000163	5388	5	66.249589			
100000163	5388	6	118.653486			
100000163	5388	7	70.518006			
100000163	5388	8	176.485024			
100000163	5388	9	169.081847			
100000163	5388	10	90.646205			
100000163	5389	1	43.47718	MCSWAIN DR	S	MCSWAIN DR, SUNSET BLVD & CHRIS DR
100000163	5389	2	45.545463			
100000163	5389	3	40.414382			
100000163	5389	4	38.902356			
100000163	5389	5	38.622928			
100000163	5389	6	48.302419			
100000163	5389	7	45.554882			
100000163	5389	8	47.513103			
100000163	5389	9	38.865235			
100000163	5389	10	31.155868			
100000163	5418	1	59.664261	CHRIS DR	N	MCSWAIN DR, SUNSET BLVD & CHRIS DR
100000163	5418	2	56.339802			
100000163	5418	3	59.100364			
100000163	5418	4	59.481895			
100000163	5418	5	61.032349			
100000163	5418	6	61.393859			
100000163	5418	7	64.406881			
100000163	5418	8	61.209555			
100000163	5418	9	59.769557			
100000163	5418	10	58.713678			
100000165	5102	1	19.87437	HARBISON BLVD	SW	HARBISON BLVD & WOODCROSS DR
100000165	5102	2	42.213124			
100000165	5102	3	27.149725			
100000165	5102	4	29.56354			
100000165	5102	5	20.644121			
100000165	5102	6	54.330512			
100000165	5102	7	26.80065			
100000165	5102	8	28.476395			
100000165	5102	9	97.862775			
100000165	5102	10	41.160362			
100000165	5103	1	57.149677	WOODCROSS DR	NW	HARBISON BLVD & WOODCROSS DR
100000165	5103	2	53.884723			
100000165	5103	3	57.60788			
100000165	5103	4	54.338002			
100000165	5103	5	50.019073			
100000165	5103	6	51.447526			
100000165	5103	7	78.986923			
100000165	5103	8	51.567888			
100000165	5103	9	55.029351			
100000165	5103	10	55.901757			

Node	Superlink	Run	Average Control Delay	Approach Street Name	Direction	Intersection
100000165	6719	1	7.324382	HARBISON BLVD	NE	HARBISON BLVD & WOODCROSS DR
100000165	6719	2	7.004162			
100000165	6719	3	7.265245			
100000165	6719	4	6.88034			
100000165	6719	5	8.199026			
100000165	6719	6	7.189767			
100000165	6719	7	7.533129			
100000165	6719	8	7.382453			
100000165	6719	9	6.550193			
100000165	6719	10	7.407844			
100000168	5364	1	9.567204	SUNSET BLVD	E	SUNSET BLVD & LEAPHART RD
100000168	5364	2	8.268491			
100000168	5364	3	6.246674			
100000168	5364	4	8.182058			
100000168	5364	5	7.913712			
100000168	5364	6	8.327002			
100000168	5364	7	6.573123			
100000168	5364	8	7.153428			
100000168	5364	9	7.067161			
100000168	5364	10	6.411101			
100000168	5366	1	42.077074	LEAPHART RD	N	SUNSET BLVD & LEAPHART RD
100000168	5366	2	44.58016			
100000168	5366	3	46.70269			
100000168	5366	4	38.482152			
100000168	5366	5	41.661364			
100000168	5366	6	39.473128			
100000168	5366	7	40.937456			
100000168	5366	8	43.004643			
100000168	5366	9	38.641474			
100000168	5366	10	44.008897			
100000168	5372	1	7.510078	SUNSET BLVD	W	SUNSET BLVD & LEAPHART RD
100000168	5372	2	9.634564			
100000168	5372	3	8.419751			
100000168	5372	4	8.792563			
100000168	5372	5	8.006732			
100000168	5372	6	9.81047			
100000168	5372	7	8.178813			
100000168	5372	8	9.357851			
100000168	5372	9	7.420652			
100000168	5372	10	9.370026			
100000174	3229	1	31.496633	I-26 EB EXIT 104 OFF RAMP	SE	PINEY GROVE RD, I-26 EB EXIT 104 OFF RAMP & I-26 EB EXIT 104 ON RAMP
100000174	3229	2	28.973422			
100000174	3229	3	33.165256			
100000174	3229	4	30.9171			
100000174	3229	5	32.297453			
100000174	3229	6	32.624602			
100000174	3229	7	33.918298			
100000174	3229	8	30.631945			
100000174	3229	9	32.276472			
100000174	3229	10	29.387603			
100000174	5112	1	3.369821	PINEY GROVE RD	W	PINEY GROVE RD, I-26 EB EXIT 104 OFF RAMP & I-26 EB EXIT 104 ON RAMP
100000174	5112	2	3.355539			
100000174	5112	3	4.112177			
100000174	5112	4	2.983869			
100000174	5112	5	3.742144			
100000174	5112	6	3.914127			
100000174	5112	7	3.879298			
100000174	5112	8	3.476088			
100000174	5112	9	5.042689			
100000174	5112	10	3.3939			
100000174	6660	1	5.252088	PINEY GROVE RD	E	PINEY GROVE RD, I-26 EB EXIT 104 OFF RAMP & I-26 EB EXIT 104 ON RAMP
100000174	6660	2	5.375486			
100000174	6660	3	5.764294			
100000174	6660	4	5.63878			
100000174	6660	5	5.096702			
100000174	6660	6	6.069169			
100000174	6660	7	5.55133			
100000174	6660	8	4.798603			
100000174	6660	9	5.975538			
100000174	6660	10	5.135701			
100000177	5112	1	13.753026	PINEY GROVE RD	E	PINEY GROVE RD, I-26 WB EXIT 104 OFF RAMP & I-26 WB EXIT 104 ON RAMP
100000177	5112	2	19.945527			
100000177	5112	3	17.60546			
100000177	5112	4	13.024362			
100000177	5112	5	18.325224			
100000177	5112	6	15.222349			
100000177	5112	7	15.649116			
100000177	5112	8	14.243141			
100000177	5112	9	18.403126			
100000177	5112	10	13.912654			
100000177	6514	1	49.153653	I-26 WB EXIT 104 OFF RAMP	N	PINEY GROVE RD, I-26 WB EXIT 104 OFF RAMP & I-26 WB EXIT 104 ON RAMP
100000177	6514	2	50.633786			
100000177	6514	3	45.06659			
100000177	6514	4	45.494065			
100000177	6514	5	56.135201			
100000177	6514	6	50.828965			
100000177	6514	7	53.678964			
100000177	6514	8	69.947873			
100000177	6514	9	53.003992			
100000177	6514	10	46.907042			
100000177	6662	1	26.017154	PINEY GROVE RD	W	PINEY GROVE RD, I-26 WB EXIT 104 OFF RAMP & I-26 WB EXIT 104 ON RAMP
100000177	6662	2	26.001782			
100000177	6662	3	26.749011			
100000177	6662	4	22.664274			
100000177	6662	5	25.466078			
100000177	6662	6	25.298678			
100000177	6662	7	23.741729			
100000177	6662	8	25.120476			
100000177	6662	9	25.302856			
100000177	6662	10	23.62952			
100000182	5117	1	0	ST ANDREWS RD	SW	ST ANDREWS RD & 6774 (S)
100000182	5117	2	0			
100000182	5117	3	0			
100000182	5117	4	0			
100000182	5117	5	0			
100000182	5117	6	0			
100000182	5117	7	0			
100000182	5117	8	0			
100000182	5117	9	0			
100000182	5117	10	0			
100000182	6737	1	0	ST ANDREWS RD	NE	ST ANDREWS RD & 6774 (S)
100000182	6737	2	0			
100000182	6737	3	0			
100000182	6737	4	0			
100000182	6737	5	0			

Node	Superlink	Run	Average Control Delay	Approach Street Name	Direction	Intersection
100000182	6737	6	0			
100000182	6737	7	0			
100000182	6737	8	0			
100000182	6737	9	0			
100000182	6737	10	0			
100000182	6774	1	104.654606		NE	ST ANDREWS RD & 6774 (S)
100000182	6774	2	118.601422			
100000182	6774	3	110.756803			
100000182	6774	4	102.046396			
100000182	6774	5	76.761725			
100000182	6774	6	104.253531			
100000182	6774	7	110.401685			
100000182	6774	8	95.836932			
100000182	6774	9	92.293183			
100000182	6774	10	91.250104			
100000184	5499	1	13.133821	N ARROWWOOD RD	S	ARROWWOOD RD, BUSH RIVER RD & N ARROWWOOD RD
100000184	5499	2	11.364344			
100000184	5499	3	14.444298			
100000184	5499	4	14.232901			
100000184	5499	5	12.646583			
100000184	5499	6	12.619776			
100000184	5499	7	12.647379			
100000184	5499	8	15.535704			
100000184	5499	9	12.320263			
100000184	5499	10	13.82851			
100000184	5500	1	27.896748	ARROWWOOD RD	N	ARROWWOOD RD, BUSH RIVER RD & N ARROWWOOD RD
100000184	5500	2	29.221868			
100000184	5500	3	27.064567			
100000184	5500	4	28.074514			
100000184	5500	5	28.380013			
100000184	5500	6	26.95766			
100000184	5500	7	27.660804			
100000184	5500	8	26.06759			
100000184	5500	9	27.555089			
100000184	5500	10	28.372067			
100000184	6497	1	13.156497	BUSH RIVER RD	W	ARROWWOOD RD, BUSH RIVER RD & N ARROWWOOD RD
100000184	6497	2	13.38803			
100000184	6497	3	13.234435			
100000184	6497	4	12.437147			
100000184	6497	5	14.122396			
100000184	6497	6	12.336554			
100000184	6497	7	12.539507			
100000184	6497	8	12.164799			
100000184	6497	9	14.405768			
100000184	6497	10	11.78191			
100000184	6505	1	4.78197	BUSH RIVER RD	E	ARROWWOOD RD, BUSH RIVER RD & N ARROWWOOD RD
100000184	6505	2	4.508399			
100000184	6505	3	5.086291			
100000184	6505	4	5.431859			
100000184	6505	5	5.276115			
100000184	6505	6	5.091926			
100000184	6505	7	6.106031			
100000184	6505	8	5.564201			
100000184	6505	9	5.014884			
100000184	6505	10	4.13019			
100000185	3232	1	55.899305	RAMP	W	GREYSTONE BLVD & RAMP
100000185	3232	2	22.793146			
100000185	3232	3	73.27912			
100000185	3232	4	13.76855			
100000185	3232	5	13.8393			
100000185	3232	6	38.287455			
100000185	3232	7	32.241533			
100000185	3232	8	29.159726			
100000185	3232	9	21.214039			
100000185	3232	10	97.717621			
100000185	5140	1	0.616517	GREYSTONE BLVD	N	GREYSTONE BLVD & RAMP
100000185	5140	2	0.359774			
100000185	5140	3	0.381083			
100000185	5140	4	0.586988			
100000185	5140	5	0.468393			
100000185	5140	6	0.560758			
100000185	5140	7	0.463521			
100000185	5140	8	0.421985			
100000185	5140	9	0.535832			
100000185	5140	10	0.592817			
100000185	5143	1	12.9692	GREYSTONE BLVD	S	GREYSTONE BLVD & RAMP
100000185	5143	2	14.045481			
100000185	5143	3	11.068342			
100000185	5143	4	13.296889			
100000185	5143	5	14.108683			
100000185	5143	6	14.620541			
100000185	5143	7	15.796687			
100000185	5143	8	12.780095			
100000185	5143	9	15.109418			
100000185	5143	10	13.763523			
100000186	4949	1	14.660123	SUNSET BLVD	W	HARBOR DR, SUNSET BLVD & E HOSPITAL DR
100000186	4949	2	12.685915			
100000186	4949	3	16.902514			
100000186	4949	4	19.199857			
100000186	4949	5	16.056874			
100000186	4949	6	16.667124			
100000186	4949	7	15.237219			
100000186	4949	8	16.904225			
100000186	4949	9	16.76199			
100000186	4949	10	16.158457			
100000186	5386	1	297.22415	HARBOR DR	N	HARBOR DR, SUNSET BLVD & E HOSPITAL DR
100000186	5386	2	312.019209			
100000186	5386	3	112.043599			
100000186	5386	4	207.155419			
100000186	5386	5	347.98164			
100000186	5386	6	128.005769			
100000186	5386	7	365.819881			
100000186	5386	8	166.065219			
100000186	5386	9	161.257908			
100000186	5386	10	235.77728			
100000186	5387	1	67.997218	E HOSPITAL DR	S	HARBOR DR, SUNSET BLVD & E HOSPITAL DR
100000186	5387	2	79.401789			
100000186	5387	3	67.004941			
100000186	5387	4	88.323948			
100000186	5387	5	77.841177			
100000186	5387	6	62.205413			
100000186	5387	7	70.750229			
100000186	5387	8	63.281725			
100000186	5387	9	62.946477			
100000186	5387	10	75.74119			

Node	Superlink	Run	Average Control Delay	Approach Street Name	Direction	Intersection
100000186	6762	1	49.919825	SUNSET BLVD	E	HARBOR DR, SUNSET BLVD & E HOSPITAL DR
100000186	6762	2	45.580773			
100000186	6762	3	50.824498			
100000186	6762	4	36.701076			
100000186	6762	5	43.198316			
100000186	6762	6	55.315733			
100000186	6762	7	35.309039			
100000186	6762	8	57.761178			
100000186	6762	9	50.567608			
100000186	6762	10	62.164678			
100000187	6057	1	45.661393	BROAD RIVER RD	NW	BROAD RIVER RD, BRIARGATE CIR & MARLEY DR
100000187	6057	2	54.265484			
100000187	6057	3	55.1499			
100000187	6057	4	59.126536			
100000187	6057	5	54.716617			
100000187	6057	6	41.950173			
100000187	6057	7	43.672444			
100000187	6057	8	57.739624			
100000187	6057	9	46.3912			
100000187	6057	10	48.974688			
100000187	6059	1	9.634226	BROAD RIVER RD	SE	BROAD RIVER RD, BRIARGATE CIR & MARLEY DR
100000187	6059	2	15.164822			
100000187	6059	3	9.42164			
100000187	6059	4	7.864298			
100000187	6059	5	9.90882			
100000187	6059	6	9.176591			
100000187	6059	7	8.925318			
100000187	6059	8	8.820408			
100000187	6059	9	8.751939			
100000187	6059	10	8.983053			
100000187	6060	1	57.743358	MARLEY DR	SW	BROAD RIVER RD, BRIARGATE CIR & MARLEY DR
100000187	6060	2	94.924966			
100000187	6060	3	73.225508			
100000187	6060	4	59.560109			
100000187	6060	5	68.653285			
100000187	6060	6	65.035883			
100000187	6060	7	57.329421			
100000187	6060	8	64.592428			
100000187	6060	9	55.174269			
100000187	6060	10	62.387015			
100000187	6061	1	26.277113	BRIARGATE CIR	NE	BROAD RIVER RD, BRIARGATE CIR & MARLEY DR
100000187	6061	2	39.623959			
100000187	6061	3	26.063423			
100000187	6061	4	26.902958			
100000187	6061	5	24.8067			
100000187	6061	6	30.689426			
100000187	6061	7	35.621332			
100000187	6061	8	33.767372			
100000187	6061	9	36.936709			
100000187	6061	10	26.346742			
100000188	3222	1	1.671035	RAMP	W	GREYSTONE BLVD & RAMP
100000188	3222	2	1.002137			
100000188	3222	3	1.170119			
100000188	3222	4	0.550195			
100000188	3222	5	1.025246			
100000188	3222	6	1.256221			
100000188	3222	7	0.366644			
100000188	3222	8	0.911004			
100000188	3222	9	1.269874			
100000188	3222	10	1.043099			
100000188	5139	1	1.688451	GREYSTONE BLVD	S	GREYSTONE BLVD & RAMP
100000188	5139	2	2.025719			
100000188	5139	3	1.796603			
100000188	5139	4	1.935183			
100000188	5139	5	1.288216			
100000188	5139	6	1.609521			
100000188	5139	7	1.680762			
100000188	5139	8	1.583113			
100000188	5139	9	1.785542			
100000188	5139	10	1.294328			
100000188	5143	1	1.878921	GREYSTONE BLVD	N	GREYSTONE BLVD & RAMP
100000188	5143	2	2.186955			
100000188	5143	3	1.948378			
100000188	5143	4	1.950938			
100000188	5143	5	2.155641			
100000188	5143	6	1.487567			
100000188	5143	7	2.374507			
100000188	5143	8	2.191264			
100000188	5143	9	1.552863			
100000188	5143	10	2.168518			
100000190	5148	1	0	BROAD RIVER RD	SE	BROAD RIVER RD, EXIT 65 RAMP TO US 176 & 6579 (NE)
100000190	5148	2	0			
100000190	5148	3	0			
100000190	5148	4	0			
100000190	5148	5	0			
100000190	5148	6	0			
100000190	5148	7	0			
100000190	5148	8	0			
100000190	5148	9	0			
100000190	5148	10	0			
100000190	6445	1	11.82187	BROAD RIVER RD	NW	BROAD RIVER RD, EXIT 65 RAMP TO US 176 & 6579 (NE)
100000190	6445	2	10.408236			
100000190	6445	3	12.114746			
100000190	6445	4	12.380285			
100000190	6445	5	11.803437			
100000190	6445	6	10.015522			
100000190	6445	7	11.291875			
100000190	6445	8	12.684067			
100000190	6445	9	12.715465			
100000190	6445	10	11.049271			
100000190	6574	1	21.797883	EXIT 65 RAMP TO US 176	E	BROAD RIVER RD, EXIT 65 RAMP TO US 176 & 6579 (NE)
100000190	6574	2	34.062589			
100000190	6574	3	26.59773			
100000190	6574	4	26.928982			
100000190	6574	5	26.259367			
100000190	6574	6	29.73719			
100000190	6574	7	27.302381			
100000190	6574	8	28.047485			
100000190	6574	9	28.871047			
100000190	6574	10	30.699273			
100000195	6049	1	18.532253	BROAD RIVER RD	NW	LONGCREEK DR & BROAD RIVER RD
100000195	6049	2	16.46197			
100000195	6049	3	17.815133			
100000195	6049	4	18.361297			
100000195	6049	5	16.699858			

Node	Superlink	Run	Average Control Delay	Approach Street Name	Direction	Intersection
100000195	6049	6	18.348307			
100000195	6049	7	18.164856			
100000195	6049	8	19.109424			
100000195	6049	9	17.334015			
100000195	6049	10	17.626913			
100000195	6052	1	46.858848	LONGCREEK DR	SW	LONGCREEK DR & BROAD RIVER RD
100000195	6052	2	49.645807			
100000195	6052	3	46.263913			
100000195	6052	4	46.001363			
100000195	6052	5	43.01153			
100000195	6052	6	44.163657			
100000195	6052	7	51.892416			
100000195	6052	8	51.960191			
100000195	6052	9	51.329378			
100000195	6052	10	46.703543			
100000195	6445	1	2.055013	BROAD RIVER RD	SE	LONGCREEK DR & BROAD RIVER RD
100000195	6445	2	2.412579			
100000195	6445	3	2.909684			
100000195	6445	4	2.60488			
100000195	6445	5	2.269939			
100000195	6445	6	1.887519			
100000195	6445	7	2.848476			
100000195	6445	8	2.362377			
100000195	6445	9	1.967876			
100000195	6445	10	2.804503			
100000252	5125	1	23.645515	BUSH RIVER RD	E	MORNINGHILL DR, BUSH RIVER RD & RAMP
100000252	5125	2	26.301979			
100000252	5125	3	20.357257			
100000252	5125	4	23.45217			
100000252	5125	5	21.682863			
100000252	5125	6	26.263326			
100000252	5125	7	23.106909			
100000252	5125	8	45.762305			
100000252	5125	9	23.062129			
100000252	5125	10	21.446295			
100000252	5487	1	48.412394	MORNINGHILL DR	S	MORNINGHILL DR, BUSH RIVER RD & RAMP
100000252	5487	2	83.091598			
100000252	5487	3	67.096101			
100000252	5487	4	53.828625			
100000252	5487	5	42.529954			
100000252	5487	6	51.451325			
100000252	5487	7	51.958253			
100000252	5487	8	51.628803			
100000252	5487	9	54.613827			
100000252	5487	10	49.715409			
100000252	5488	1		RAMP	N	MORNINGHILL DR, BUSH RIVER RD & RAMP
100000252	5488	2				
100000252	5488	3				
100000252	5488	4				
100000252	5488	5				
100000252	5488	6				
100000252	5488	7				
100000252	5488	8				
100000252	5488	9				
100000252	5488	10				
100000252	6505	1	13.460021	BUSH RIVER RD	W	MORNINGHILL DR, BUSH RIVER RD & RAMP
100000252	6505	2	12.229664			
100000252	6505	3	13.072557			
100000252	6505	4	13.801796			
100000252	6505	5	12.082406			
100000252	6505	6	14.09693			
100000252	6505	7	12.711454			
100000252	6505	8	13.563074			
100000252	6505	9	13.636786			
100000252	6505	10	13.530427			
100000254	5119	1	0	WOODLAND HILLS RD	S	WOODLAND HILLS RD & FRONTAGE RD
100000254	5119	2	0			
100000254	5119	3	0			
100000254	5119	4	0			
100000254	5119	5	0			
100000254	5119	6	0			
100000254	5119	7	0			
100000254	5119	8	0			
100000254	5119	9	0			
100000254	5119	10	0			
100000254	5607	1	11.960783	WOODLAND HILLS RD	N	WOODLAND HILLS RD & FRONTAGE RD
100000254	5607	2	11.8429			
100000254	5607	3	13.291803			
100000254	5607	4	10.653672			
100000254	5607	5	12.812199			
100000254	5607	6	14.776			
100000254	5607	7	11.772412			
100000254	5607	8	11.956221			
100000254	5607	9	10.40805			
100000254	5607	10	12.464402			
100000254	6538	1		FRONTAGE RD	W	WOODLAND HILLS RD & FRONTAGE RD
100000254	6538	2				
100000254	6538	3				
100000254	6538	4				
100000254	6538	5				
100000254	6538	6				
100000254	6538	7				
100000254	6538	8				
100000254	6538	9				
100000254	6538	10				
100000255	5470	1	67.331225	INDEPENDENCE AVE	N	BUSH RIVER RD & INDEPENDENCE AVE
100000255	5470	2	75.111078			
100000255	5470	3	52.3855			
100000255	5470	4	61.339983			
100000255	5470	5	162.961519			
100000255	5470	6	65.44559			
100000255	5470	7	157.522391			
100000255	5470	8	144.661583			
100000255	5470	9	127.513516			
100000255	5470	10	55.995729			
100000255	5471	1	12.632271	BUSH RIVER RD	W	BUSH RIVER RD & INDEPENDENCE AVE
100000255	5471	2	11.752876			
100000255	5471	3	12.880436			
100000255	5471	4	13.606045			
100000255	5471	5	13.117467			
100000255	5471	6	11.606673			
100000255	5471	7	10.434445			
100000255	5471	8	13.117294			
100000255	5471	9	12.453117			
100000255	5471	10	13.178958			

Node	Superlink	Run	Average Control Delay	Approach Street Name	Direction	Intersection
100000255	6740	1	17.104143	BUSH RIVER RD	E	BUSH RIVER RD & INDEPENDENCE AVE
100000255	6740	2	16.158265			
100000255	6740	3	15.605921			
100000255	6740	4	14.959191			
100000255	6740	5	16.065158			
100000255	6740	6	15.214811			
100000255	6740	7	16.415644			
100000255	6740	8	16.612339			
100000255	6740	9	15.822828			
100000255	6740	10	15.966292			
100000256	5131	1	5.73311	BUSH RIVER RD	W	BUSH RIVER RD & ZIMALCREST DR
100000256	5131	2	7.954884			
100000256	5131	3	6.618521			
100000256	5131	4	7.543262			
100000256	5131	5	6.3848			
100000256	5131	6	6.407553			
100000256	5131	7	6.416862			
100000256	5131	8	7.347965			
100000256	5131	9	7.315333			
100000256	5131	10	5.756926			
100000256	5465	1	8.377634	BUSH RIVER RD	E	BUSH RIVER RD & ZIMALCREST DR
100000256	5465	2	8.993428			
100000256	5465	3	9.904552			
100000256	5465	4	9.524619			
100000256	5465	5	6.983046			
100000256	5465	6	7.608239			
100000256	5465	7	7.004309			
100000256	5465	8	8.64182			
100000256	5465	9	8.13833			
100000256	5465	10	6.696724			
100000256	5484	1	38.517561	ZIMALCREST DR	S	BUSH RIVER RD & ZIMALCREST DR
100000256	5484	2	34.093673			
100000256	5484	3	38.188433			
100000256	5484	4	41.453876			
100000256	5484	5	38.772229			
100000256	5484	6	36.059262			
100000256	5484	7	45.380192			
100000256	5484	8	23.98772			
100000256	5484	9	31.552685			
100000256	5484	10	40.310577			
100000256	5485	1	11.836832	ZIMALCREST DR	N	BUSH RIVER RD & ZIMALCREST DR
100000256	5485	2	12.903961			
100000256	5485	3	12.185218			
100000256	5485	4	12.670984			
100000256	5485	5	11.85794			
100000256	5485	6	13.041716			
100000256	5485	7	13.998813			
100000256	5485	8	13.409049			
100000256	5485	9	13.585955			
100000256	5485	10	13.167824			
100000348	5116	1	10.237823	ST ANDREWS RD	NW	ST ANDREWS RD & JAMIL RD
100000348	5116	2	9.303805			
100000348	5116	3	10.777811			
100000348	5116	4	11.179564			
100000348	5116	5	9.57297			
100000348	5116	6	10.646821			
100000348	5116	7	10.786552			
100000348	5116	8	10.466025			
100000348	5116	9	10.510647			
100000348	5116	10	9.928094			
100000348	6114	1	48.961232	ST ANDREWS RD	E	ST ANDREWS RD & JAMIL RD
100000348	6114	2	38.595806			
100000348	6114	3	38.261421			
100000348	6114	4	70.888862			
100000348	6114	5	21.504098			
100000348	6114	6	14.985167			
100000348	6114	7	37.497638			
100000348	6114	8	24.87471			
100000348	6114	9	13.335232			
100000348	6114	10	23.795356			
100000348	6119	1	32.66866	JAMIL RD	S	ST ANDREWS RD & JAMIL RD
100000348	6119	2	29.418031			
100000348	6119	3	31.242431			
100000348	6119	4	29.999806			
100000348	6119	5	31.005649			
100000348	6119	6	31.743629			
100000348	6119	7	33.748843			
100000348	6119	8	30.816602			
100000348	6119	9	32.853306			
100000348	6119	10	30.549857			
100000353	6125	1	64.344318	BOWER PKY	SE	BOWER PKY, PINEY GROVE RD & JAMIL RD
100000353	6125	2	88.804663			
100000353	6125	3	50.727633			
100000353	6125	4	62.197513			
100000353	6125	5	56.53992			
100000353	6125	6	57.955898			
100000353	6125	7	72.537154			
100000353	6125	8	68.653259			
100000353	6125	9	60.419426			
100000353	6125	10	79.80547			
100000353	6126	1	31.672728	PINEY GROVE RD	E	BOWER PKY, PINEY GROVE RD & JAMIL RD
100000353	6126	2	34.613788			
100000353	6126	3	30.748873			
100000353	6126	4	30.746302			
100000353	6126	5	31.145993			
100000353	6126	6	27.318171			
100000353	6126	7	30.535479			
100000353	6126	8	30.367007			
100000353	6126	9	30.280089			
100000353	6126	10	32.122052			
100000353	6127	1	354.352795	JAMIL RD	NW	BOWER PKY, PINEY GROVE RD & JAMIL RD
100000353	6127	2	220.977197			
100000353	6127	3	283.168149			
100000353	6127	4	137.861325			
100000353	6127	5	162.739962			
100000353	6127	6	418.39726			
100000353	6127	7	400.258323			
100000353	6127	8	283.59463			
100000353	6127	9	334.160499			
100000353	6127	10	248.224566			
100000353	6659	1	34.147538	PINEY GROVE RD	W	BOWER PKY, PINEY GROVE RD & JAMIL RD
100000353	6659	2	33.542713			
100000353	6659	3	31.33546			
100000353	6659	4	37.116401			
100000353	6659	5	36.968602			

Node	Superlink	Run	Average Control Delay	Approach Street Name	Direction	Intersection
100000353	6659	6	32.740014			
100000353	6659	7	35.154364			
100000353	6659	8	29.347287			
100000353	6659	9	34.845547			
100000353	6659	10	35.681471			
100000354	6094	1	25.828486	ST ANDREWS RD	SW	ST ANDREWS RD, KAY ST & CHARTWELL RD
100000354	6094	2	21.665862			
100000354	6094	3	22.406528			
100000354	6094	4	21.742181			
100000354	6094	5	23.963379			
100000354	6094	6	23.878551			
100000354	6094	7	22.051728			
100000354	6094	8	21.097155			
100000354	6094	9	22.79612			
100000354	6094	10	22.289735			
100000354	6098	1	55.878723	CHARTWELL RD	NW	ST ANDREWS RD, KAY ST & CHARTWELL RD
100000354	6098	2	41.356191			
100000354	6098	3	42.271952			
100000354	6098	4	44.452294			
100000354	6098	5	40.14151			
100000354	6098	6	39.912507			
100000354	6098	7	50.312031			
100000354	6098	8	32.862159			
100000354	6098	9	46.343644			
100000354	6098	10	31.624847			
100000354	6099	1	27.768291	KAY ST	SE	ST ANDREWS RD, KAY ST & CHARTWELL RD
100000354	6099	2	23.796095			
100000354	6099	3	23.994446			
100000354	6099	4	22.37376			
100000354	6099	5	22.447904			
100000354	6099	6	24.311965			
100000354	6099	7	27.573001			
100000354	6099	8	26.084529			
100000354	6099	9	23.126527			
100000354	6099	10	27.72495			
100000354	6100	1	19.531602	ST ANDREWS RD	NE	ST ANDREWS RD, KAY ST & CHARTWELL RD
100000354	6100	2	18.388473			
100000354	6100	3	16.072736			
100000354	6100	4	16.0701			
100000354	6100	5	16.666633			
100000354	6100	6	16.762426			
100000354	6100	7	19.507865			
100000354	6100	8	18.806235			
100000354	6100	9	16.933449			
100000354	6100	10	18.207734			
100000358	5117	1	31.657652	ST ANDREWS RD	NE	ST ANDREWS RD, FERNANDINA RD & BURNING TREE RD
100000358	5117	2	31.105865			
100000358	5117	3	32.601146			
100000358	5117	4	30.303462			
100000358	5117	5	29.173836			
100000358	5117	6	28.944653			
100000358	5117	7	29.841384			
100000358	5117	8	28.92227			
100000358	5117	9	28.089141			
100000358	5117	10	29.508366			
100000358	6100	1	50.680242	ST ANDREWS RD	SW	ST ANDREWS RD, FERNANDINA RD & BURNING TREE RD
100000358	6100	2	49.338398			
100000358	6100	3	51.673147			
100000358	6100	4	43.28847			
100000358	6100	5	53.738437			
100000358	6100	6	41.991773			
100000358	6100	7	40.499415			
100000358	6100	8	41.611872			
100000358	6100	9	39.822554			
100000358	6100	10	42.096261			
100000358	6101	1	29.360603	BURNING TREE RD	NW	ST ANDREWS RD, FERNANDINA RD & BURNING TREE RD
100000358	6101	2	28.958446			
100000358	6101	3	30.266874			
100000358	6101	4	29.633589			
100000358	6101	5	30.631421			
100000358	6101	6	32.349118			
100000358	6101	7	30.881264			
100000358	6101	8	29.488287			
100000358	6101	9	28.512717			
100000358	6101	10	29.102077			
100000358	6102	1	15.540557	FERNANDINA RD	SE	ST ANDREWS RD, FERNANDINA RD & BURNING TREE RD
100000358	6102	2	17.829996			
100000358	6102	3	18.084938			
100000358	6102	4	16.641157			
100000358	6102	5	18.344717			
100000358	6102	6	15.868411			
100000358	6102	7	16.353514			
100000358	6102	8	18.895474			
100000358	6102	9	16.764427			
100000358	6102	10	16.148566			
100000360	6101	1	0	BURNING TREE RD	S	I-26 WB TO BURNING TREE RD EXIT 106 OFF RAMP & BURNING TREE RD
100000360	6101	2	0			
100000360	6101	3	0			
100000360	6101	4	0			
100000360	6101	5	0			
100000360	6101	6	0			
100000360	6101	7	0			
100000360	6101	8	0			
100000360	6101	9	0			
100000360	6101	10	0			
100000360	6105	1	0.000317	BURNING TREE RD	N	I-26 WB TO BURNING TREE RD EXIT 106 OFF RAMP & BURNING TREE RD
100000360	6105	2	0.000737			
100000360	6105	3	0.000361			
100000360	6105	4	0.000322			
100000360	6105	5	0			
100000360	6105	6	0.001031			
100000360	6105	7	0.000912			
100000360	6105	8	0.001207			
100000360	6105	9	0.001333			
100000360	6105	10	0.002135			
100000360	6766	1	39.257075	I-26 WB TO BURNING TREE RD EXIT 106 OFF RAI	NE	I-26 WB TO BURNING TREE RD EXIT 106 OFF RAMP & BURNING TREE RD
100000360	6766	2	13.679091			
100000360	6766	3	84.213918			
100000360	6766	4	110.409206			
100000360	6766	5	137.248826			
100000360	6766	6	52.793327			
100000360	6766	7	102.260088			
100000360	6766	8	30.31462			
100000360	6766	9	51.799283			
100000360	6766	10	72.235936			

Node	Superlink	Run	Average Control Delay	Approach Street Name	Direction	Intersection
100000362	6134	1	35.103449	JAMIL RD	NW	HARBISON BLVD & JAMIL RD
100000362	6134	2	42.044229			
100000362	6134	3	38.643747			
100000362	6134	4	42.036134			
100000362	6134	5	53.122249			
100000362	6134	6	40.510837			
100000362	6134	7	45.978367			
100000362	6134	8	51.704874			
100000362	6134	9	40.768436			
100000362	6134	10	50.941203			
100000362	6137	1	0.888347	HARBISON BLVD	NE	HARBISON BLVD & JAMIL RD
100000362	6137	2	11.279393			
100000362	6137	3	0.969136			
100000362	6137	4	13.317551			
100000362	6137	5	14.803811			
100000362	6137	6	1.616938			
100000362	6137	7	18.488029			
100000362	6137	8	15.064866			
100000362	6137	9	5.169172			
100000362	6137	10	25.288776			
100000362	6717	1	0.127341	HARBISON BLVD	SW	HARBISON BLVD & JAMIL RD
100000362	6717	2	0.018905			
100000362	6717	3	0.117961			
100000362	6717	4	0.237742			
100000362	6717	5	0.176711			
100000362	6717	6	0.010846			
100000362	6717	7	0.093949			
100000362	6717	8	0.090036			
100000362	6717	9	0.023567			
100000362	6717	10	0.145834			
100000364	6145	1	7.578217	HARBISON BLVD	SW	HARBISON BLVD & COLUMBIANA DR
100000364	6145	2	9.586388			
100000364	6145	3	7.96321			
100000364	6145	4	8.40823			
100000364	6145	5	9.73155			
100000364	6145	6	8.454773			
100000364	6145	7	7.821067			
100000364	6145	8	7.946545			
100000364	6145	9	9.830995			
100000364	6145	10	7.769313			
100000364	6176	1	6.373101	HARBISON BLVD	NE	HARBISON BLVD & COLUMBIANA DR
100000364	6176	2	6.95023			
100000364	6176	3	5.764875			
100000364	6176	4	7.134235			
100000364	6176	5	7.423111			
100000364	6176	6	6.214275			
100000364	6176	7	7.225509			
100000364	6176	8	7.530506			
100000364	6176	9	7.03951			
100000364	6176	10	8.403501			
100000364	6177	1		COLUMBIANA DR	NW	HARBISON BLVD & COLUMBIANA DR
100000364	6177	2				
100000364	6177	3				
100000364	6177	4				
100000364	6177	5				
100000364	6177	6				
100000364	6177	7				
100000364	6177	8				
100000364	6177	9				
100000364	6177	10				
100000364	6196	1	186.084558	COLUMBIANA DR	SE	HARBISON BLVD & COLUMBIANA DR
100000364	6196	2	252.722881			
100000364	6196	3	120.357509			
100000364	6196	4	195.524075			
100000364	6196	5	233.286495			
100000364	6196	6	165.001776			
100000364	6196	7	238.017262			
100000364	6196	8	255.021384			
100000364	6196	9	163.996003			
100000364	6196	10	255.814192			
100000365	6137	1	24.223797	HARBISON BLVD	SW	COLUMBIANA CIR, HARBISON BLVD & PARK TERRACE DR
100000365	6137	2	24.022778			
100000365	6137	3	25.01673			
100000365	6137	4	25.394546			
100000365	6137	5	27.945167			
100000365	6137	6	24.755336			
100000365	6137	7	27.673226			
100000365	6137	8	24.718917			
100000365	6137	9	22.991274			
100000365	6137	10	27.729776			
100000365	6140	1	55.909472	COLUMBIANA CIR	SE	COLUMBIANA CIR, HARBISON BLVD & PARK TERRACE DR
100000365	6140	2	58.359271			
100000365	6140	3	56.754995			
100000365	6140	4	57.728298			
100000365	6140	5	60.745275			
100000365	6140	6	54.814245			
100000365	6140	7	66.773713			
100000365	6140	8	62.40003			
100000365	6140	9	59.26039			
100000365	6140	10	58.645446			
100000365	6145	1	8.947958	HARBISON BLVD	NE	COLUMBIANA CIR, HARBISON BLVD & PARK TERRACE DR
100000365	6145	2	11.403248			
100000365	6145	3	9.682348			
100000365	6145	4	11.962121			
100000365	6145	5	16.235079			
100000365	6145	6	9.706365			
100000365	6145	7	19.552325			
100000365	6145	8	16.701456			
100000365	6145	9	9.622634			
100000365	6145	10	20.391799			
100000365	6151	1	53.487314	PARK TERRACE DR	NW	COLUMBIANA CIR, HARBISON BLVD & PARK TERRACE DR
100000365	6151	2	82.731069			
100000365	6151	3	80.386478			
100000365	6151	4	79.457264			
100000365	6151	5	87.277806			
100000365	6151	6	59.209685			
100000365	6151	7	68.252097			
100000365	6151	8	96.721753			
100000365	6151	9	60.539131			
100000365	6151	10	100.602088			
100000391	5071	1	7.359953	BROAD RIVER RD	NW	BROAD RIVER RD & COLUMBIANA DR
100000391	5071	2	6.663464			
100000391	5071	3	5.507919			
100000391	5071	4	7.553152			
100000391	5071	5	6.837778			

Node	Superlink	Run	Average Control Delay	Approach Street Name	Direction	Intersection
100000391	5071	6	6.14036			
100000391	5071	7	7.104215			
100000391	5071	8	6.375326			
100000391	5071	9	7.617655			
100000391	5071	10	5.542257			
100000391	6214	1	46.641993	COLUMBIANA DR	NE	BROAD RIVER RD & COLUMBIANA DR
100000391	6214	2	51.508688			
100000391	6214	3	44.335195			
100000391	6214	4	39.005446			
100000391	6214	5	44.93278			
100000391	6214	6	43.533261			
100000391	6214	7	43.230057			
100000391	6214	8	41.84494			
100000391	6214	9	45.638419			
100000391	6214	10	47.301142			
100000391	6224	1	17.149797	BROAD RIVER RD	SE	BROAD RIVER RD & COLUMBIANA DR
100000391	6224	2	13.259972			
100000391	6224	3	13.221247			
100000391	6224	4	16.351273			
100000391	6224	5	17.758517			
100000391	6224	6	14.534389			
100000391	6224	7	13.556355			
100000391	6224	8	14.157307			
100000391	6224	9	13.936703			
100000391	6224	10	11.826447			
100000395	5086	1	63.941946	LAKE MURRAY BLVD	W	LAKE MURRAY BLVD & COLUMBIANA DR
100000395	5086	2	52.306401			
100000395	5086	3	43.272401			
100000395	5086	4	65.683077			
100000395	5086	5	47.646496			
100000395	5086	6	58.725738			
100000395	5086	7	42.072461			
100000395	5086	8	50.217335			
100000395	5086	9	43.798937			
100000395	5086	10	70.323436			
100000395	6208	1	50.78261	COLUMBIANA DR	NW	LAKE MURRAY BLVD & COLUMBIANA DR
100000395	6208	2	83.527529			
100000395	6208	3	248.935206			
100000395	6208	4	234.523766			
100000395	6208	5	148.168332			
100000395	6208	6	224.864923			
100000395	6208	7	177.654521			
100000395	6208	8	95.512569			
100000395	6208	9	186.353923			
100000395	6208	10	64.488757			
100000395	6214	1	248.677858	COLUMBIANA DR	S	LAKE MURRAY BLVD & COLUMBIANA DR
100000395	6214	2	127.620789			
100000395	6214	3	280.736992			
100000395	6214	4	127.030959			
100000395	6214	5	434.184348			
100000395	6214	6	113.46909			
100000395	6214	7	130.4986			
100000395	6214	8	497.758016			
100000395	6214	9	543.319527			
100000395	6214	10	94.742478			
100000395	6215	1	96.377984	LAKE MURRAY BLVD	E	LAKE MURRAY BLVD & COLUMBIANA DR
100000395	6215	2	51.591549			
100000395	6215	3	67.336189			
100000395	6215	4	78.724543			
100000395	6215	5	139.750327			
100000395	6215	6	67.552809			
100000395	6215	7	52.44257			
100000395	6215	8	49.782082			
100000395	6215	9	69.850763			
100000395	6215	10	106.412869			
100000398	5101	1	2.140097	HARBISON BLVD	W	HARBISON BLVD & PARKRIDGE DR
100000398	5101	2	4.934359			
100000398	5101	3	2.37892			
100000398	5101	4	2.722079			
100000398	5101	5	3.043929			
100000398	5101	6	6.086296			
100000398	5101	7	2.296205			
100000398	5101	8	2.316561			
100000398	5101	9	57.15277			
100000398	5101	10	6.582783			
100000398	5102	1	4.515361	HARBISON BLVD	NE	HARBISON BLVD & PARKRIDGE DR
100000398	5102	2	13.387578			
100000398	5102	3	6.248409			
100000398	5102	4	10.129989			
100000398	5102	5	5.678883			
100000398	5102	6	12.148369			
100000398	5102	7	7.718684			
100000398	5102	8	8.670678			
100000398	5102	9	11.484587			
100000398	5102	10	8.940336			
100000398	6267	1	29.939594	PARKRIDGE DR	SE	HARBISON BLVD & PARKRIDGE DR
100000398	6267	2	35.246462			
100000398	6267	3	32.740565			
100000398	6267	4	32.364256			
100000398	6267	5	34.072508			
100000398	6267	6	32.216201			
100000398	6267	7	40.240872			
100000398	6267	8	32.303908			
100000398	6267	9	94.243435			
100000398	6267	10	37.764054			
100000399	6263	1	28.62786	PINEY GROVE RD	W	PINEY GROVE RD & FERNANDINA RD
100000399	6263	2	28.524456			
100000399	6263	3	23.790437			
100000399	6263	4	26.441858			
100000399	6263	5	28.007099			
100000399	6263	6	29.288512			
100000399	6263	7	25.678497			
100000399	6263	8	28.19928			
100000399	6263	9	29.608462			
100000399	6263	10	28.203426			
100000399	6265	1	23.992251	FERNANDINA RD	SE	PINEY GROVE RD & FERNANDINA RD
100000399	6265	2	26.57519			
100000399	6265	3	24.897373			
100000399	6265	4	29.681031			
100000399	6265	5	27.236299			
100000399	6265	6	24.758084			
100000399	6265	7	22.02579			
100000399	6265	8	21.214148			
100000399	6265	9	25.306527			
100000399	6265	10	27.519477			

Node	Superlink	Run	Average Control Delay	Approach Street Name	Direction	Intersection
100000399	6266	1	82.237651	FERNANDINA RD	N	PINEY GROVE RD & FERNANDINA RD
100000399	6266	2	86.449473			
100000399	6266	3	69.965228			
100000399	6266	4	92.840628			
100000399	6266	5	162.840135			
100000399	6266	6	143.15293			
100000399	6266	7	73.860115			
100000399	6266	8	61.990548			
100000399	6266	9	72.932139			
100000399	6266	10	132.896283			
100000399	6662	1	38.53975	PINEY GROVE RD	E	PINEY GROVE RD & FERNANDINA RD
100000399	6662	2	38.268523			
100000399	6662	3	35.434134			
100000399	6662	4	36.130748			
100000399	6662	5	41.372246			
100000399	6662	6	43.38637			
100000399	6662	7	39.2978			
100000399	6662	8	37.238636			
100000399	6662	9	43.203467			
100000399	6662	10	39.009553			
100000401	5093	1	12.539146	LAKE MURRAY BLVD	E	KINLEY RD, LAKE MURRAY BLVD & PARKRIDGE DR
100000401	5093	2	11.755261			
100000401	5093	3	13.129067			
100000401	5093	4	11.735156			
100000401	5093	5	11.177893			
100000401	5093	6	13.437875			
100000401	5093	7	11.545371			
100000401	5093	8	11.372213			
100000401	5093	9	13.663867			
100000401	5093	10	15.289017			
100000401	6276	1	26.718294	KINLEY RD	S	KINLEY RD, LAKE MURRAY BLVD & PARKRIDGE DR
100000401	6276	2	22.013573			
100000401	6276	3	25.881787			
100000401	6276	4	19.316056			
100000401	6276	5	20.019691			
100000401	6276	6	25.705317			
100000401	6276	7	24.266845			
100000401	6276	8	23.515774			
100000401	6276	9	23.209185			
100000401	6276	10	25.056418			
100000401	6313	1	13.490677	LAKE MURRAY BLVD	W	KINLEY RD, LAKE MURRAY BLVD & PARKRIDGE DR
100000401	6313	2	16.470227			
100000401	6313	3	18.721165			
100000401	6313	4	16.519675			
100000401	6313	5	20.480466			
100000401	6313	6	18.407466			
100000401	6313	7	17.37061			
100000401	6313	8	15.873744			
100000401	6313	9	17.590282			
100000401	6313	10	21.952632			
100000401	6745	1	44.982805	PARKRIDGE DR	N	KINLEY RD, LAKE MURRAY BLVD & PARKRIDGE DR
100000401	6745	2	45.098525			
100000401	6745	3	41.854591			
100000401	6745	4	37.830598			
100000401	6745	5	35.150577			
100000401	6745	6	46.255417			
100000401	6745	7	43.646278			
100000401	6745	8	41.031876			
100000401	6745	9	41.41363			
100000401	6745	10	44.065173			
100000446	6732	1	0	RAMP	SW	RAMP
100000446	6732	2	0			
100000446	6732	3	0			
100000446	6732	4	0			
100000446	6732	5	0			
100000446	6732	6	0			
100000446	6732	7	0			
100000446	6732	8	0			
100000446	6732	9	0			
100000446	6732	10	0			
100000446	6779	1	0	RAMP	S	RAMP
100000446	6779	2	0			
100000446	6779	3	0			
100000446	6779	4	0			
100000446	6779	5	0			
100000446	6779	6	0			
100000446	6779	7	0			
100000446	6779	8	0			
100000446	6779	9	0			
100000446	6779	10	0			
100000520	3345	1		I-26 WB EXIT 102 ON RAMP	N	I-26 WB EXIT 102 ON RAMP
100000520	3345	2				
100000520	3345	3				
100000520	3345	4				
100000520	3345	5				
100000520	3345	6				
100000520	3345	7				
100000520	3345	8				
100000520	3345	9				
100000520	3345	10				
100000520	3350	1	0	I-26 WB EXIT 102 ON RAMP	N	I-26 WB EXIT 102 ON RAMP
100000520	3350	2	0			
100000520	3350	3	0			
100000520	3350	4	0			
100000520	3350	5	0			
100000520	3350	6	0			
100000520	3350	7	0			
100000520	3350	8	0			
100000520	3350	9	0			
100000520	3350	10	0			
100000702	4343	1	0	RAMP	SW	RAMP & 6587 (E)
100000702	4343	2	0			
100000702	4343	3	0			
100000702	4343	4	0			
100000702	4343	5	0			
100000702	4343	6	0			
100000702	4343	7	0			
100000702	4343	8	0			
100000702	4343	9	0			
100000702	4343	10	0			
100000702	6587	1	0		W	RAMP & 6587 (E)
100000702	6587	2	0			
100000702	6587	3	0			
100000702	6587	4	0			
100000702	6587	5	0			

Node	Superlink	Run	Average Control Delay	Approach Street Name	Direction	Intersection
100000702	6587	6	0			
100000702	6587	7	0			
100000702	6587	8	0			
100000702	6587	9	0			
100000702	6587	10	0			
100000897	5134	1	21.379449	W COLONIAL LIFE BLVD	NW	COLONIAL LIFE BLVD W & W COLONIAL LIFE BLVD
100000897	5134	2	71.772888			
100000897	5134	3	45.219612			
100000897	5134	4	69.093647			
100000897	5134	5	58.86918			
100000897	5134	6	288.132529			
100000897	5134	7	26.886492			
100000897	5134	8	22.273506			
100000897	5134	9	30.602442			
100000897	5134	10	26.92646			
100000897	6471	1	6.18562	COLONIAL LIFE BLVD W	S	COLONIAL LIFE BLVD W & W COLONIAL LIFE BLVD
100000897	6471	2	5.792014			
100000897	6471	3	7.277133			
100000897	6471	4	4.132447			
100000897	6471	5	5.864035			
100000897	6471	6	6.382416			
100000897	6471	7	5.302145			
100000897	6471	8	6.000992			
100000897	6471	9	8.254487			
100000897	6471	10	8.217517			
100000897	6545	1	1.637493	COLONIAL LIFE BLVD W	NE	COLONIAL LIFE BLVD W & W COLONIAL LIFE BLVD
100000897	6545	2	2.13254			
100000897	6545	3	2.139118			
100000897	6545	4	2.185781			
100000897	6545	5	2.334024			
100000897	6545	6	1.773255			
100000897	6545	7	1.970126			
100000897	6545	8	2.043766			
100000897	6545	9	1.887667			
100000897	6545	10	1.946342			
100000898	5125	1	0.336583	BUSH RIVER RD	W	BUSH RIVER RD
100000898	5125	2	0.310163			
100000898	5125	3	0.434539			
100000898	5125	4	0.431783			
100000898	5125	5	0.511519			
100000898	5125	6	0.455394			
100000898	5125	7	0.443843			
100000898	5125	8	0.373293			
100000898	5125	9	0.319404			
100000898	5125	10	0.836169			
100000898	5130	1	18.32612	BUSH RIVER RD	N	BUSH RIVER RD
100000898	5130	2	21.839598			
100000898	5130	3	26.752664			
100000898	5130	4	22.399141			
100000898	5130	5	27.187976			
100000898	5130	6	28.267346			
100000898	5130	7	18.828929			
100000898	5130	8	17.957644			
100000898	5130	9	21.915447			
100000898	5130	10	23.840435			
100000898	5131	1	3.212402	BUSH RIVER RD	E	BUSH RIVER RD
100000898	5131	2	4.276806			
100000898	5131	3	3.996118			
100000898	5131	4	4.421386			
100000898	5131	5	4.030677			
100000898	5131	6	4.316317			
100000898	5131	7	5.897662			
100000898	5131	8	4.002461			
100000898	5131	9	3.584152			
100000898	5131	10	3.578749			
100000899	6105	1	0	BURNING TREE RD	S	I-26 WB TO BURNING TREE RD EXIT 106 OFF RAMP & BURNING TREE RD
100000899	6105	2	0			
100000899	6105	3	0			
100000899	6105	4	0			
100000899	6105	5	0			
100000899	6105	6	0			
100000899	6105	7	0			
100000899	6105	8	0			
100000899	6105	9	0			
100000899	6105	10	0			
100000899	6106	1	0	BURNING TREE RD	N	I-26 WB TO BURNING TREE RD EXIT 106 OFF RAMP & BURNING TREE RD
100000899	6106	2	0			
100000899	6106	3	0			
100000899	6106	4	0			
100000899	6106	5	0			
100000899	6106	6	0			
100000899	6106	7	0			
100000899	6106	8	0			
100000899	6106	9	0			
100000899	6106	10	0			
100000902	4292	1	19.633985	RAMP	NE	SUNSET BLVD & RAMP
100000902	4292	2	25.413116			
100000902	4292	3	23.569123			
100000902	4292	4	21.679463			
100000902	4292	5	22.692968			
100000902	4292	6	23.445419			
100000902	4292	7	27.169343			
100000902	4292	8	24.96886			
100000902	4292	9	30.148183			
100000902	4292	10	23.674222			
100000902	4947	1	35.939628	SUNSET BLVD	W	SUNSET BLVD & RAMP
100000902	4947	2	28.701745			
100000902	4947	3	34.626802			
100000902	4947	4	36.599395			
100000902	4947	5	31.856372			
100000902	4947	6	39.436929			
100000902	4947	7	26.349232			
100000902	4947	8	34.37511			
100000902	4947	9	35.49042			
100000902	4947	10	31.961158			
100000902	4951	1	0	SUNSET BLVD	E	SUNSET BLVD & RAMP
100000902	4951	2	0.000133			
100000902	4951	3	0			
100000902	4951	4	0			
100000902	4951	5	0			
100000902	4951	6	0.000248			
100000902	4951	7	0			
100000902	4951	8	0			
100000902	4951	9	0			
100000902	4951	10	0			

Node	Superlink	Run	Average Control Delay	Approach Street Name	Direction	Intersection
100000903	4289	1	55.318864	RAMP	NW	RAMP & SUNSET BLVD
100000903	4289	2	53.983194			
100000903	4289	3	54.19148			
100000903	4289	4	52.601394			
100000903	4289	5	54.649728			
100000903	4289	6	54.881427			
100000903	4289	7	53.745153			
100000903	4289	8	54.390589			
100000903	4289	9	53.491932			
100000903	4289	10	53.305822			
100000903	4298	1	35.250899	RAMP	SE	RAMP & SUNSET BLVD
100000903	4298	2	31.737255			
100000903	4298	3	31.815624			
100000903	4298	4	33.674904			
100000903	4298	5	32.002576			
100000903	4298	6	33.0462			
100000903	4298	7	31.473072			
100000903	4298	8	33.413681			
100000903	4298	9	32.383452			
100000903	4298	10	32.722107			
100000903	4950	1	13.672671	SUNSET BLVD	E	RAMP & SUNSET BLVD
100000903	4950	2	14.285213			
100000903	4950	3	14.175535			
100000903	4950	4	14.31218			
100000903	4950	5	15.330072			
100000903	4950	6	14.414662			
100000903	4950	7	14.132185			
100000903	4950	8	14.523906			
100000903	4950	9	14.455014			
100000903	4950	10	14.280307			
100000903	4951	1	19.952565	SUNSET BLVD	W	RAMP & SUNSET BLVD
100000903	4951	2	20.071706			
100000903	4951	3	22.665444			
100000903	4951	4	21.923933			
100000903	4951	5	20.526194			
100000903	4951	6	20.721978			
100000903	4951	7	20.029444			
100000903	4951	8	19.812849			
100000903	4951	9	27.391318			
100000903	4951	10	21.96724			

Appendix F—Conceptual Signing Plans

ADVANCE OVERHEAD SIGNING FOR I-20 EASTBOUND EXITS 64D-A

CAROLINA CROSSROADS
CONCEPTUAL SIGNING ALONG INTERSTATE 20

0 100 200 400 600 800 1000

SCALE : 1"=400'

SHEET 1

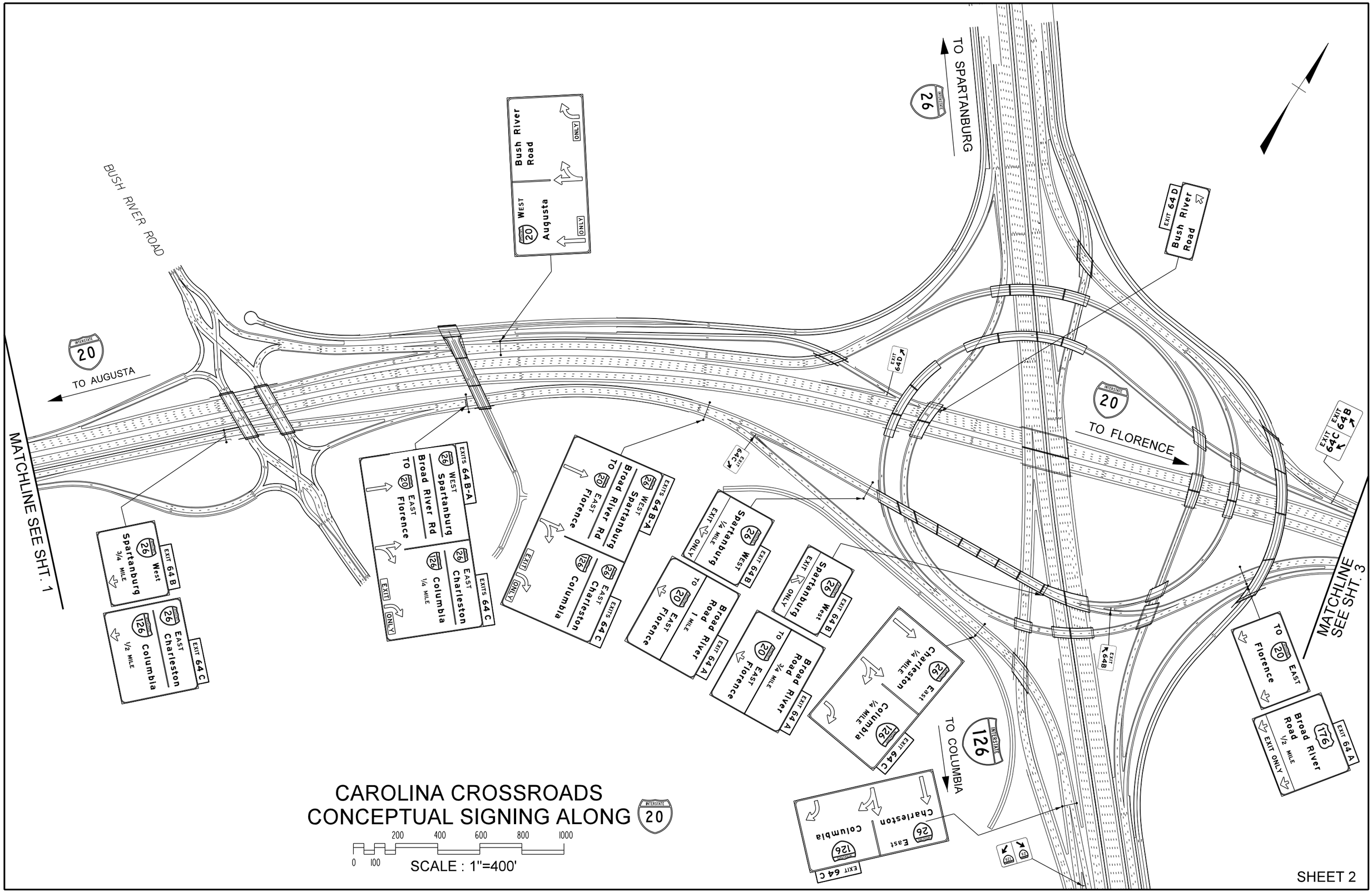
BUSH RIVER ROAD
TO SPARTANBURG
INTERSTATE 26
Bush River Road
ONLY
WEST
Augusta
INTERSTATE 20
ONLY
EXIT 64D
Bush River Road
INTERSTATE 20
TO AUGUSTA
TO FLORENCE
MATCHLINE SEE SHT. 1
MATCHLINE SEE SHT. 3
EXITS 64 B-A
WEST Spartanburg
Broad River Rd
TO EAST Florence
EAST Charleston
Columbia
1/4 MILE
EXIT ONLY
EXIT 64 B
Spartanburg
3/4 MILE
West
EXIT 64 C
Columbia
1/2 MILE
EAST Charleston
EXITS 64 C
Columbia
EAST Florence
Broad River Rd
WEST Spartanburg
EXITS 64 B-A
EXIT 64C
EXIT 64D
EXIT 64B
Spartanburg
1/4 MILE
West
EXIT 64 B
To Florence
1 MILE
Broad River Road
EXIT 64 A
To Florence
3/4 MILE
Broad River Road
EXIT 64 A
Columbia
1/4 MILE
East Charleston
EXIT 64 C
INTERSTATE 126
TO COLUMBIA
Columbia
East Charleston
EXIT 64 C
EXIT 64B
EXIT 64C
TO Florence
EAST
Broad River Road
1/2 MILE
EXIT ONLY
EXIT 64 A
CAROLINA CROSSROADS
CONCEPTUAL SIGNING ALONG INTERSTATE 20
0 100 200 400 600 800 1000
SCALE : 1"=400'
SHEET 2

MATCHLINE SEE SHT. 2

EXIT 64 B
West
26
Spartanburg
EXIT ONLY

EXIT 64 C
EAST
Charleston
26
Columbia
126
EXIT ONLY

INTERSTATE
20
TO AUGUSTA

EXIT 64 C
EAST
Charleston
26
Columbia
126
1/4 MILE
EXIT ONLY

EXIT 64 B
West
26
Spartanburg
1/4 MILE
EXIT ONLY

EXIT 64 D
Bush River
Road
3/4 MILE

EXITS 64 B-C
Spartanburg
Charleston
26
Columbia
126

WEST
20
Augusta

EXITS 64 B-C
Spartanburg
Charleston
26
Columbia
126
EXIT ONLY

WEST
20
Augusta

INTERSTATE
20
TO FLORENCE

MATCHLKINE SEE SHT. 4

EXITS 64 B-C

TO
20
EAST
Florence

Broad River
Road
176
EXIT ONLY
EXIT 64 A

EXIT 64A

TO
20
EAST
Florence

Broad River
Road
176
EXIT ONLY
EXIT 64 A

BROAD RIVER ROAD

CAROLINA CROSSROADS
CONCEPTUAL SIGNING ALONG INTERSTATE 20

0 100 200 400 600 800 1000

SCALE : 1"=400'

SHEET 3

ADVANCE OVERHEAD SIGNING FOR
I-20 WESTBOUND EXITS 64A-D

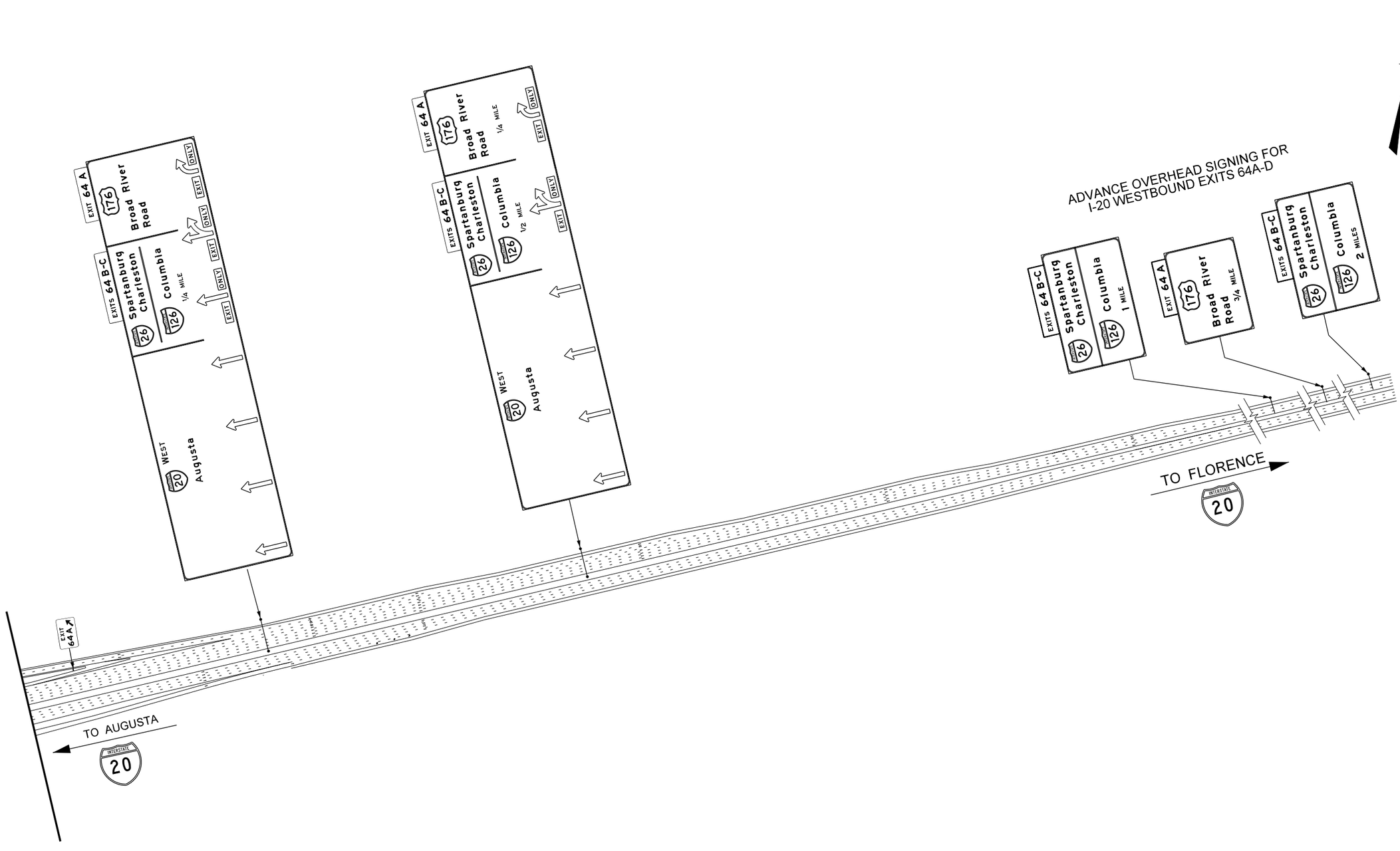

CAROLINA CROSSROADS
CONCEPTUAL SIGNING ALONG INTERSTATE 26

0 100 200 400 600 800 1000

SCALE : 1"=400'

MATCHLINE SEE SHT. 5

TO CHARLESTON

EXITS 107B-A
Florence
Augusta
3/4 MILE

EXIT 108
Columbia
Col. Life Blvd
To Bush River Rd
EXIT ONLY

EXIT 108

Col. Life Blvd
To Bush River
Road

Columbia

Col. Life Blvd
To Bush River
Road

Greystone Blvd
Riverbanks Zoo
1¼ MILE

Columbia

Col. Life Blvd
To Bush River
Road
½ MILE

TO COLUMBIA

MATCHLINE SEE SHT. 7

BUSH RIVER RD.

East
Charleston

Columbia

MATCHLINE SEE SHT. 8

COLONIAL LIFE BLVD.

Spartanburg
Florence
Augusta

East
Charleston

Spartanburg

Florence
Augusta
¼ MILE
EXIT ONLY

EXITS 107 A-B

EXITS 107 A-B
Florence
Augusta
½ MILE

East
Charleston
EXIT ONLY

EXITS 107 A-B

West
Spartanburg

Florence
Augusta
EXIT ONLY

EXIT 107A
West
Augusta

EXIT 107B
East
Florence
¼ MILE

West
Spartanburg

EXIT 107A
West
Augusta

EXIT 107B
East
Florence

TO SPARTANBURG

EXIT 106
St. Andrews
Road
¾ MILE
EXIT ONLY

CAROLINA CROSSROADS
CONCEPTUAL SIGNING ALONG 26

0 100 200 400 600 800 1000

SCALE : 1"=400'

SHEET 6

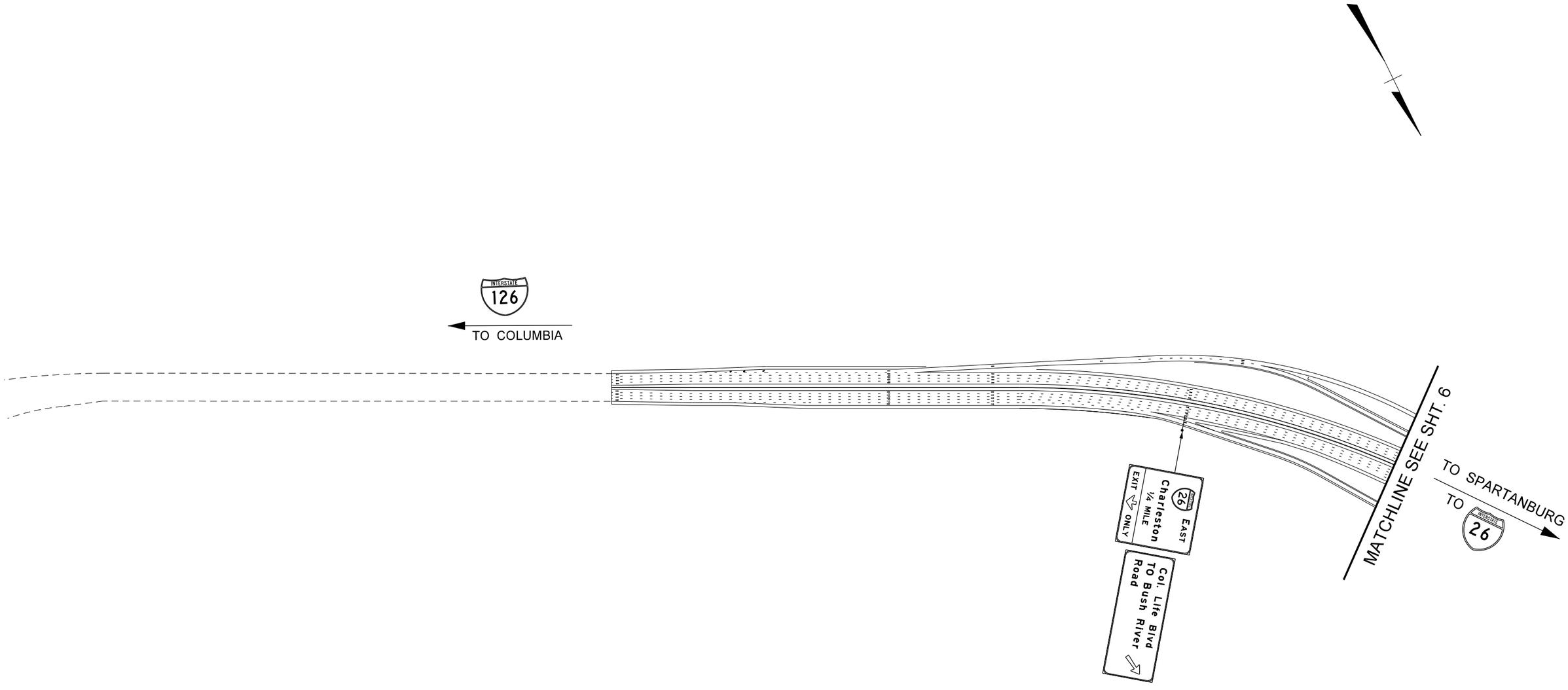

CAROLINA CROSS ROADS
CONCEPTUAL SIGNING ALONG INTERSTATE 126

0 100 200 400 600 800 1000

SCALE : 1"=400'

SEE CONCEPTUAL SIGNING ALONG I-20

* INDICATES SIGNS ALONG I-20

TO AUGUSTA

INTERSTATE 20

EXIT 108
EAST
126 76
Columbia
Colonial Life Blvd
To Bush River Rd
EXIT ONLY

EAST
26
Charleston

EXIT 108
EAST
126 76
Columbia
Colonial Life Blvd
To Bush River Rd
1/4 MILE
EXIT ONLY

EAST
26
Charleston

EXIT 107 A
WEST
20
Augusta

EAST
20
Florence

EXIT 107 A
WEST
20
Augusta

EAST
20
Florence

EXITS 107 A-B
20
Augusta
Florence

EAST
Charleston
26
Columbia
126
Col. Life Blvd
To Bush River Rd

EXIT 108
EAST
126 76
Columbia
Colonial Life Blvd
To Bush River Rd
3/4 MILE

EAST
26
Charleston

ST. ANDREWS RD

EXITS 107B-A

INTERSTATE 26
TO CHARLESTON

EXIT 64 A
Broad River Road 1/4 MILE EXIT ONLY

TO EAST Florence

EXIT 64 B
Spartanburg WEST EXIT ONLY

EXIT 64 C
Charleston
Columbia

EXIT 64 D
Bush River Road

EXIT 108

EXIT 107B

EXIT 107A

EXIT 106

EXIT 64 E
Broad River Road 1 MILE EAST

TO Florence

EXIT 64 A
Broad River Road 1/4 MILE EXIT ONLY

EXIT 64 B
Spartanburg WEST EXIT ONLY

EXIT 64 C
Charleston
Columbia

EXIT 64 D
Bush River Rd
TO EAST Florence

MATCHLINE SEE SHT. 6

MATCHLINE SEE SHT. 9

St. Andrews Road 1/4 MILE EXIT ONLY
EXIT 106

TO Florence EAST

Broad River Road 1/4 MILE EXIT ONLY
176
EXIT 64 A

SEE CONCEPTUAL SIGNING ALONG I-20

TO FLORENCE
INTERSTATE 20

EXIT 64 C
EXIT 64 B

EAST
26
WEST
Spartanburg

EAST
26
76
WEST
Spartanburg

St. Andrews Road 1/4 MILE EXIT ONLY
EXIT 106

St. Andrews Road EXIT ONLY
EXIT 106

St. Andrews Road EXIT ONLY
EXIT 106

TO SPARTANBURG
INTERSTATE 26

ST. ANDREWS RD.

CAROLINA CROSS ROADS
CONCEPTUAL SIGNING ALONG INTERSTATE 26

0 100 200 400 600 800 1000

SCALE : 1"=400'

SHEET 8

MATCHLINE SEE SHT. 8

EXITS 107A-B
20
Augusta
Florence
EXIT ONLY

EXIT 106
St Andrews
Road
EXIT ONLY

EXIT 107A-B
20
Augusta
Florence
¼ MILE
EXIT ONLY

26
76
EAST
Charleston

EXIT 108
EXIT
106
26
76
EAST
Columbia
Col. Life Blvd
To Bush River Rd
1 MILE

INTERSTATE
26
TO CHARLESTON

EXIT 106
St Andrews
Road
½ MILE
EXIT ONLY

EXIT 107A-B
20
Augusta
Florence
¾ MILE
EXIT ONLY

26
76
EAST
Charleston

St Andrews Rd ¾
I-20 1
I-126 1¾

TO SPARTANBURG
INTERSTATE
26

Piney Grove Rd 2¼
Harbison Blvd 3½
Lake Murray Blvd 4½

Piney Grove Rd ½
Harbison Blvd 1¾
Lake Murray Blvd 2¾

26
76
WEST
Spartanburg

Piney Grove
Road
1 MILE
EXIT
ONLY

EXIT 104

MATCHLINE SEE SHT. 10

CAROLINA CROSSROADS
CONCEPTUAL SIGNING ALONG INTERSTATE 26

0 100 200 400 600 800 1000

SCALE : 1"=400'

MATCHLINE SEE SHT. 9

TO CHARLESTON

INTERSTATE 26

EXITS 107A-B
AUGUSTA 20
Augusta
Florence
1 1/4 MILE
EXIT ONLY

PINEY GROVE RD

EXIT 104

EXIT 104
Piney Grove
Road
EXIT ONLY

EXIT 107
AUGUSTA 20
Augusta
Florence
2 MILES

TO SPARTANBURG

INTERSTATE 26

MATCHLINE SEE SHT. 11

EXIT 104

Harbison Blvd
3/4 MILE
EXIT 103

PINEY GROVE RD

AUGUSTA 26 26 WEST
Spartanburg
Piney Grove
Road
1/2 MILE
EXIT ONLY
EXIT 104

AUGUSTA 26 26 WEST
Spartanburg
Piney Grove
Road
EXIT ONLY
EXIT 104

AUGUSTA 26 26 WEST
Spartanburg
Harbison Blvd
1/2 MILE
EXIT ONLY
EXIT 103

CAROLINA CROSSROADS
CONCEPTUAL SIGNING ALONG INTERSTATE 26

0 100 200 400 600 800 1000

SCALE : 1"=400'

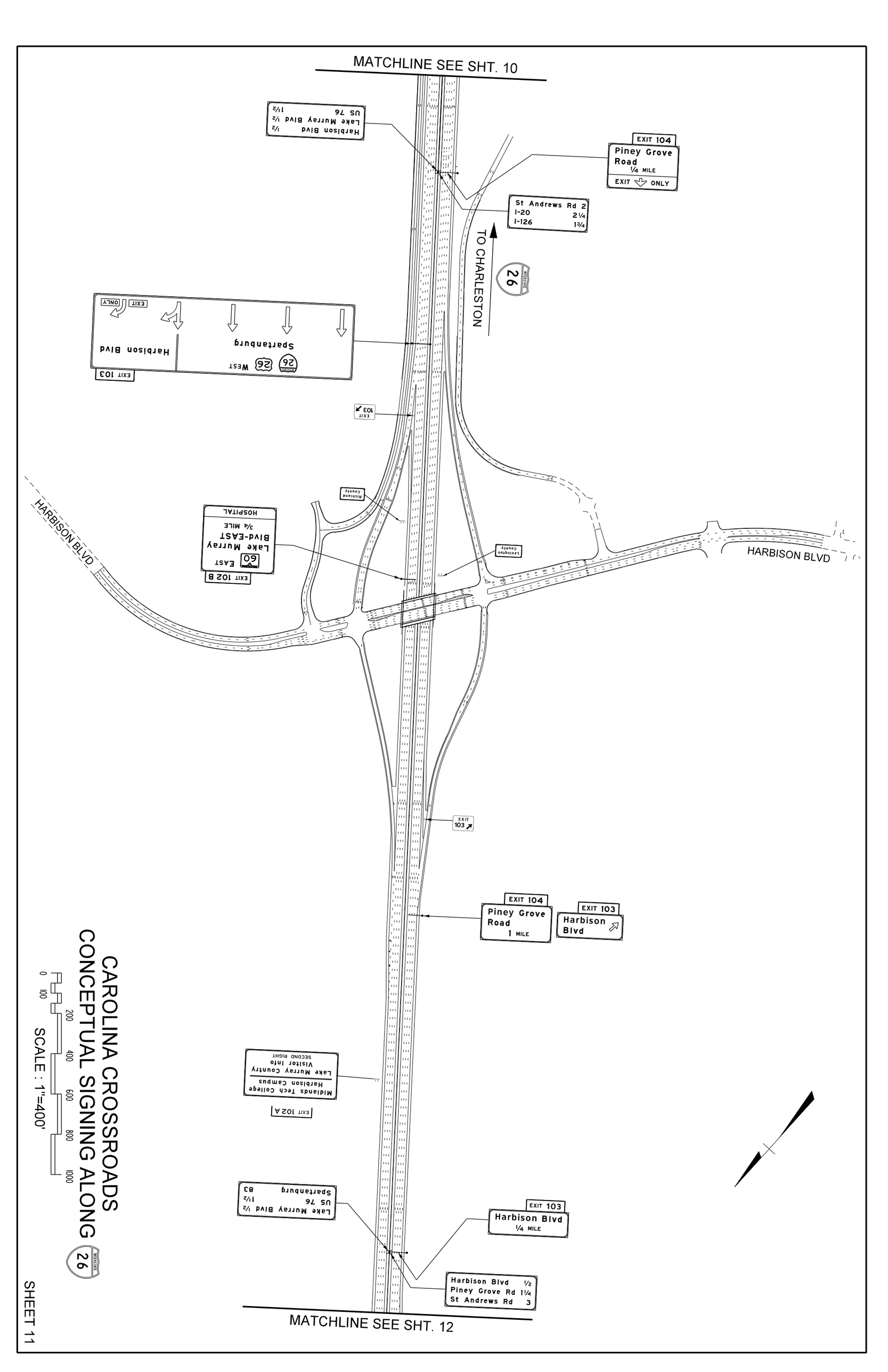

CAROLINA CROSSROADS
CONCEPTUAL SIGNING ALONG 26

SCALE : 1"=400'

0 100 200 400 600 800 1000

SHEET 11

MATCHLINE SEE SHT. 11

TO CHARLESTON

TO SPARTANBURG

MATCHLINE SEE SHT. 13

LAKE MURRAY BLVD

LAKE MURRAY BLVD

EXIT 102 B
60 EAST
Lake Murray Blvd-EAST
HOSPITAL

EXIT 103
Harbison Blvd
1 MILE

EXIT 102 A
60 WEST
Lake Murray Blvd-WEST
Irmo

EXIT 102 B
60 EAST
Lake Murray Blvd-EAST
1/4 MILE
HOSPITAL

EXIT 102 A
60 WEST
Lake Murray Blvd-WEST
1/4 MILE

EXIT 102 B
60 EAST
Lake Murray Blvd-EAST
HOSPITAL

EXITS 101 B-A
76 176
Ballentine
White Rock
3/4 MILE

EXIT 102 A
60 WEST
Lake Murray Blvd-WEST
Irmo

EXIT 101 A
76 176 WEST
Ballentine
White Rock
1/4 MILE

EXIT 101 B
176 EAST
Broad River Road-EAST

CAROLINA CROSSROADS
CONCEPTUAL SIGNING ALONG 26

0 100 200 400 600 800 1000

SCALE : 1"=400'

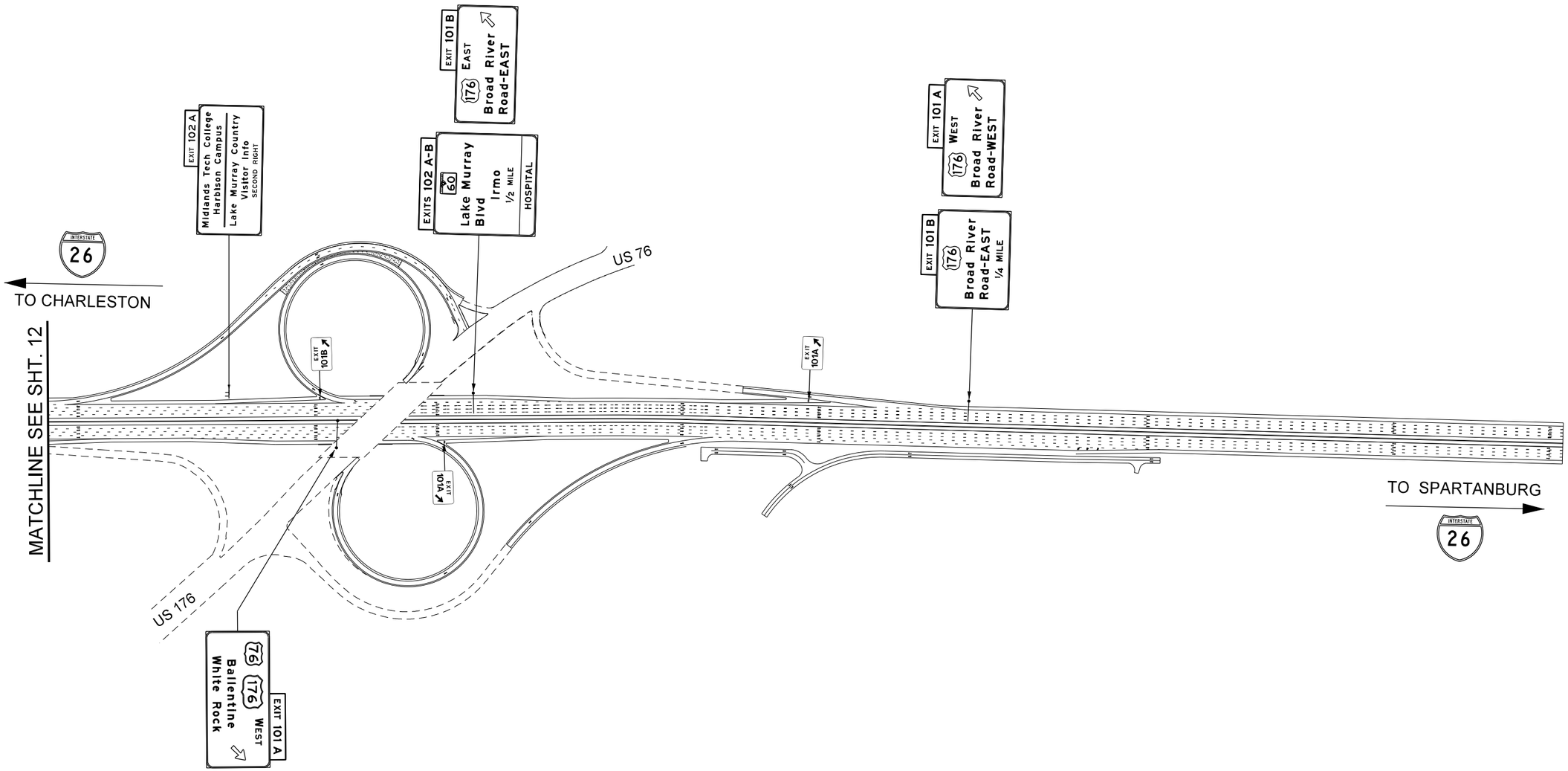

CAROLINA CROSSROADS
CONCEPTUAL SIGNING ALONG INTERSTATE 26

0 100 200 400 600 800 1000

SCALE : 1"=400'

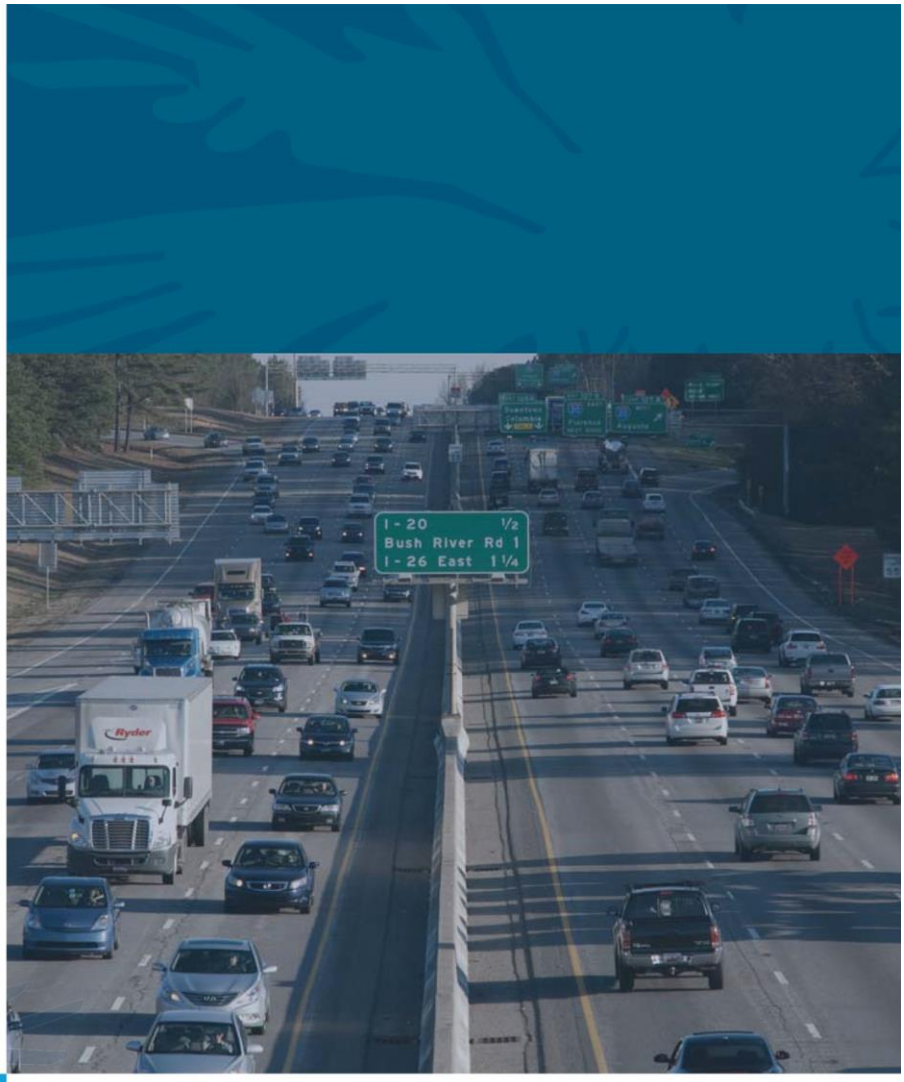

CAROLINA CROSSROADS
I-20/26/126 Corridor Project

I-26 Exit 103 Interchange Modification Report

Carolina Crossroads
I-20/I-26/I-126 Corridor Project
Lexington and Richland Counties, South Carolina

Final May 2019



SCDOT South Carolina Department of Transportation

U.S. Department of Transportation Federal Highway Administration

Prepared for South Carolina Department of Transportation and the Federal Highway Administration

CAROLINA CROSSROADS

I-26 Exit 103 Interchange Modification Report

Carolina Crossroads

I-20/I-26/I-126 Corridor Improvements

Lexington and Richland Counties, South Carolina

Final May 2019

Prepared for
South Carolina Department of Transportation,
and the Federal Highway Administration

Prepared by

STV 100 Years

SOUTH CAROLINA PROFESSIONAL ENGINEER No. 22070 ROBERT J. DUBMCKA

4-24-2019

SOUTH CAROLINA CERTIFICATE OF AUTHORIZATION STV INCORPORATED NO. C03318

SCDOT U.S. Department of Transportation Federal Highway Administration

Table of ContentsExecutive Summary **1**

1 Introduction **4**

2 Background **5**

2.1 Existing Conditions 5

2.1.1 I-26 5

2.1.2 Exit 103 – Harbison Boulevard (S-32-757/S-40-757) 7

2.2 Purpose and Need 9

2.3 Conceptual Design 9

2.4 Interchange Modification Report Applicant 9

3 Study Area **10**

3.1 Demographics 10

3.2 Land Use 11

3.3 Transportation System 12

4 Methodology **12**

4.1 Scenarios Analyzed 12

4.2 Traffic Forecasts 13

4.3 Traffic Analysis 14

5 Traffic Volumes **17**

5.1 Existing Traffic Volumes 17

5.2 2040 Traffic Volumes 18

6 Traffic Operations **19**

6.1 TransModeler Network Analysis 19

6.2 Freeway Segment Analyses 21

6.3 Merge Area Analyses 22

6.4 Diverge Area Analyses 23

6.5 Intersection Capacity Analysis 26

7 Interchange Justification **33**

7.1 Policy Point 1 33

7.2 Policy Point 2 34

List of Tables

Table 3-1 - Population Demographic 10
Table 3-2 - Population Growth 11
Table 4-1 - Freeway Segment LOS Criteria 15
Table 4-2 - Weaving Segment LOS Criteria 16
Table 4-3 - Merge/Diverge LOS Criteria 16
Table 4-4 - Unsignalized Intersection LOS Criteria 17
Table 4-5 - Signalized Intersection LOS Criteria 17
Table 6-1 - I-26 Freeway Segment Capacity Analysis – Existing, 2040 No-Build, and 2040 Build RRPA 24
Table 6-2 - I-26 Ramp Merge Capacity Analysis – Existing, 2040 No-Build, and 2040 Build RRPA 24
Table 6-3 - I-26 Ramp Diverge Capacity Analysis – Existing and 2040 No-Build, and 2040 Build RRPA 25
Table 6-4 - Intersection Capacity Analysis Results - Existing Vs. 2040 No-Build 27
Table 6-5 - Intersection Capacity Analysis Results – 2040 Build RRPA 31
Table 6-6 - 2040 Build RRPA Intersection Queue Lengths 32

List of Figures

Figure E-1 - Exit 103 IMR Study Area 3
Figure 1-1 - Carolina Crossroads Study Area 4
Figure 2-1 - Exit 103 Existing Configuration 8
Figure 6-1 - Exit 103 – Harbison Boulevard Intersection LOS Summary 28
Figure 6-2 - Exit 103 – Harbison Boulevard RRPA Configuration 30

Appendices

Appendix A—Existing Peak Hour Volumes

Appendix B—2040 Peak Hour Volumes

Appendix C— TransModeler Density Outputs

Appendix D—TransModeler Intersection Analysis Outputs

Appendix E—Conceptual Signing Plans

Executive Summary

The South Carolina Department of Transportation (SCDOT) proposes multiple improvements to the I-20, I-26, and I-126 corridors within what is identified as the Carolina Crossroads study area. The limits of the Carolina Crossroads study area include approximately four miles of I-20 between the crossings over the Saluda River and Broad River, approximately nine miles of I-26 from Exit 101 (Broad River Road) to Exit 110 (US 378), and approximately one mile of I-126 from I-26 to Colonial Life Boulevard.

The purpose of the proposed Carolina Crossroads project is to improve mobility, enhance traffic operations by reducing existing traffic congestion, accommodate future traffic needs, enhance safety throughout the corridor, improve freight mobility, and improve system linkages, while minimizing community and environmental impacts.

This interchange modification report (IMR) presents information for the proposed modification of I-26 at Harbison Boulevard (Exit 103) interchange located in Lexington and Richland counties. To address Federal Highway Administration (FHWA) requirements, the adjacent interchanges were also analyzed as part of this IMR, which include I-26 Exit 102 (Lake Murray Boulevard) and I-26 Exit 104 (Piney Grove Road).

As part of the project development, preliminary interchange alternatives capacity screening was completed for six Accessory Options (AOs) at Exit 103. Several of these AOs were incorporated into the nine representative alternatives developed for the entire Carolina Crossroads study area, along with a tenth 'no-build' alternative. From these alternatives, a Refined Recommended Preferred Alternative (RRPA) was identified. The Exit 103 interchange in the RRPA is proposed to be modified as follows:

- The existing I-26 westbound loop off-ramp will be removed, and the ramps will be realigned to provide a tight urban diamond interchange.
- The number of access points to and from I-26 at Exit 103 will not change. Eastbound I-26 will maintain one diverge area and one merge area. Westbound I-26 will also maintain one diverge area and one merge area. These merge areas and eastbound diverge areas are shifted slightly from their existing location. The westbound diverge area will be shifted approximately 1,340 feet east of its current location and will be the terminus of an approximately 3,000 feet long auxiliary lane introduced by the westbound on-ramp at Exit 103.
- The intersection of the realigned eastbound ramps with Harbison Boulevard will be approximately 80 feet to the inside of the existing eastbound ramp intersection. The eastbound off-ramp length will increase from about 1,225 feet to about 1,350 feet in length, and its diverge point will be relocated about 225 feet west of the existing diverge point. The eastbound on-ramp length will increase from about 1,135 feet to about 1,370 feet, and its merge point will be relocated approximately 250 feet east of the existing merge point.
- The intersection of the realigned westbound ramps with Harbison Boulevard will be approximately 240 feet to the inside of the existing westbound ramp intersection with Woodcross Drive. This intersection will be controlled by a traffic signal. The westbound off-ramp length will increase from about 775 feet to about 1,150 feet in length, and its diverge point will be relocated about 1,350 feet east of the existing diverge point. The eastbound on-ramp length will increase from about 1,000 feet to about 1,150 feet, and its merge point will be relocated approximately 275 feet west of the existing merge point.

- With the relocation of the westbound ramps, the existing signalized four-legged intersection of Harbison Boulevard at the westbound ramp/Woodcross Drive intersection will become a signalized T-intersection of Harbison Boulevard and Woodcross Drive.
- The existing five lane bridge crossing I-26 will be replaced by a seven-lane bridge with bike lanes in each direction. The existing multi-use path connecting the mall on the south side of I-26 to the home improvement store on the north side of I-26 will be relocated on the west side of the proposed bridge.

The portion of the RRPA evaluated in this IMR is shown in **Figure E-1**.

The analysis of the 2040 Build condition of the RRPA illustrates that the project would not have any significant negative impact on the safety and the operation of the facilities within the project area. The analysis shows the eastbound freeway segments are projected to operate at LOS E and LOS C during the morning and afternoon peak hours, respectively. In the westbound direction, the freeway segments are expected to operate at LOS C and LOS D/E during the morning and afternoon peak hours, respectively. However, the density is generally better than existing conditions. Similarly, the merge and diverge areas within the study area are expected to operate at similar or better LOS than existing. Most notably, the eastbound merge and diverge areas in the morning peak hour are expected to improve from LOS F to LOS D and E at Exit 103 (Harbison Boulevard) and 104 (Piney Grove Road), respectively.

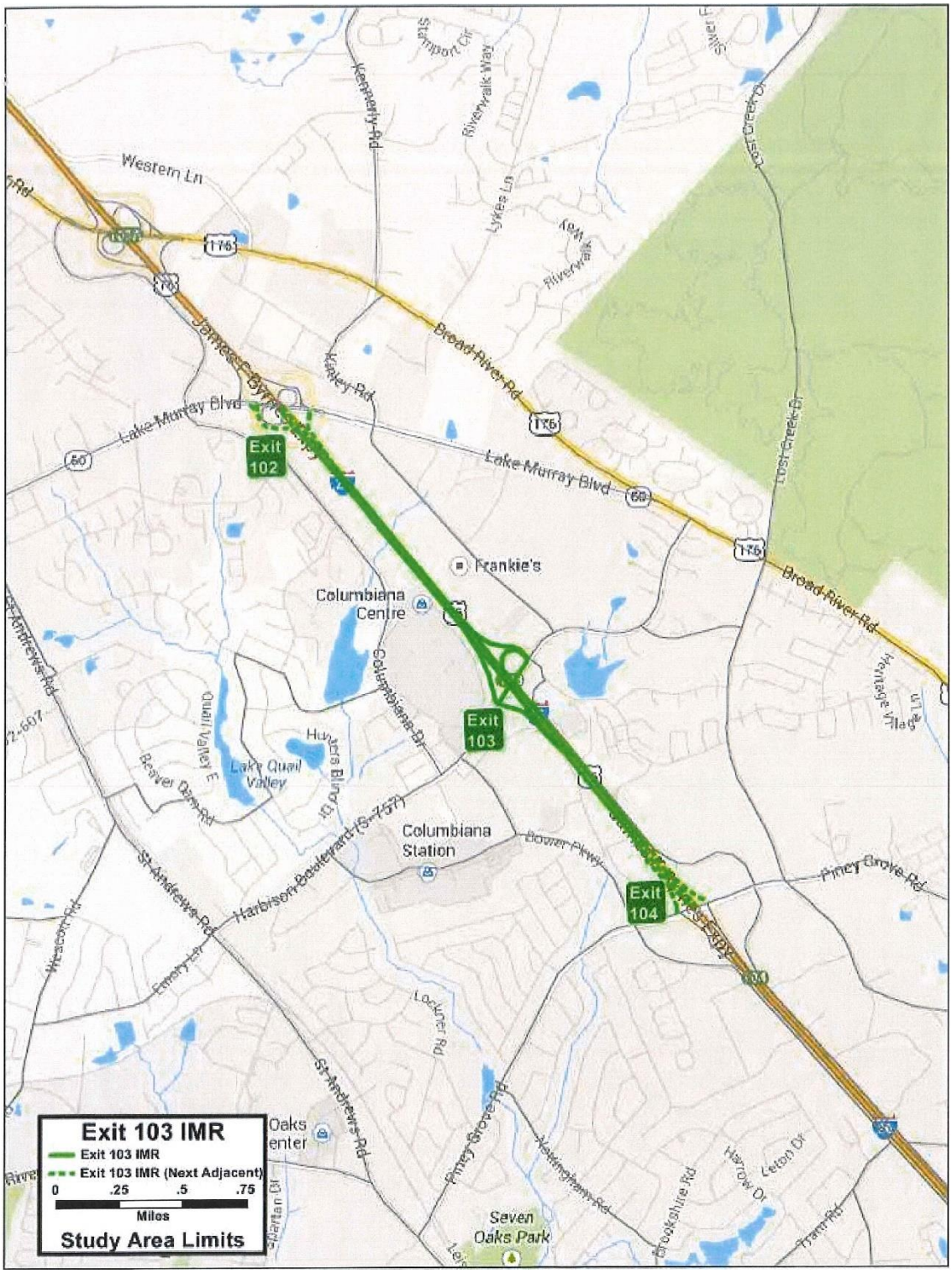

Figure E-1 - Exit 103 IMR Study Area

1 Introduction

STV, in cooperation with HDR and Mead & Hunt (the project team), has been contracted by the South Carolina Department of Transportation (SCDOT) to provide engineering services necessary for the preparation of an Environmental Impact Statement (EIS), right of way plans, and final construction plans for roadways and bridges for the proposed Carolina Crossroads I-20/I-26/I-126 Corridor Project.

I-20 is an east-west interstate highway that begins near Kent, Texas at I-10. From this origin, I-20 runs eastward through Texas, Mississippi, Alabama, Georgia and South Carolina where it ends at I-95 in Florence, South Carolina. I-26 is an east-west interstate highway that begins at the junction of U.S. Route 11W and U.S. Route 23 in Kingsport, Tennessee. From this origin, I-26 runs generally southeastward through Tennessee, North Carolina, and South Carolina, where it ends at U.S. Route 17 in Charleston, South Carolina. I-126 is an east-west auxiliary route of I-26 that begins and ends in Columbia, South Carolina.



Figure 1-1 - Carolina Crossroads Study Area

The proposed project is a transportation corridor improvement project located in Lexington and Richland counties. To date, the project area has been defined as a mainline corridor including I-20 from the Saluda River to the Broad River (approximately four miles), I-26 from Broad River Road to US-378 (approximately nine miles), and I-126 from I-26 to Colonial Life Boulevard (approximately one mile. **Figure 1-1** illustrates the extent of the Carolina Crossroads study area.

The I-20/I-26/I-126 corridor is a vital link in South Carolina, serving residents, commuters, travelers, and commerce. Due to nearby residential and commercial development, proximity to downtown Columbia, traffic volumes, and the overall geometric layout, including 12 interchange points, the I-20/I-26/I-126 corridor has become one of the most congested interstate sections in South Carolina. The purpose of the proposed project is to address this congestion and enhance safety throughout the corridor.

Information discussed in the report is derived from the following project reports: *Alternatives Traffic Analysis: Carolina Crossroads I-20/I-26/I-126 Corridor Project, Crash Analysis: Carolina Crossroads I-20/I-26/I-126 Corridor Project, Carolina Crossroads Draft Environmental Impact Statement.*

The *Alternatives Traffic Analysis* study evaluated multiple improvements within the I-20/I-26/I-126 corridor designed to reduce existing traffic congestion, upgrade interchanges to meet design requirements, and accommodate future traffic needs. The study considered widening of I-20 from three to four lanes in each direction from about one mile west of Exit 63 (Bush River Road) to Broad River, widening of I-26 from three to four lanes in each direction from just west of Exit 101 (Broad River Road) to Exit 110 (US 378), and realigning the connection to I-126 from I-26 towards the Colonial Life Boulevard interchange. In addition, the study examined modifications to the I-20/I-26/I-126 system interchange, Exit 101 (Broad River Road), Exit 102 (Lake Murray Boulevard), Exit 103 (Harbison Boulevard), Exit 104 (Piney Grove Road), Exit 106 (St. Andrews Road), Exit 108 (Bush River Road), Exit 110 (US 378), Exit 63 (Bush River Road), Exit 65 (Broad River Road), and the Colonial Life Boulevard interchange on I-126.

2 Background

The Carolina Crossroads Project includes the modification of the I-26 interchange with Harbison Boulevard (Exit 103). For this IMR, a focused roadway system was evaluated for the following interchange:

- Exit 103: I-26 at Harbison Boulevard (S-32-757/S-40-757)

To address Federal Highway Administration (FHWA) requirements, adjacent interchanges analyzed as part of this IMR include the following:

- Exit 102: I-26 at Lake Murray Boulevard (SC 60)
- Exit 104: I-26 at Piney Grove Road (S-32-671/S-40-1280)

This report focuses on traffic analysis of existing, future no-build, and build conditions. The traffic conditions were analyzed for the following scenarios:

- Existing Conditions: An analysis of existing conditions in the year 2015
- 2040 No-Build: An analysis of conditions in the year 2040 with no changes to the interchanges.
- 2040 Build: An analysis of conditions in the year 2040 with modifications to the Exit 103 interchange.

2.1 Existing Conditions

2.1.1 I-26

Eastbound I-26 approaches the study area from the northwest, entering from Richland County as a two-lane section with a posted 70 miles per hour (mph) speed limit. Approximately 1,900 feet in advance of the off-ramp to Exit 101 (Broad River Road), the speed limit is reduced to 60 mph. Approximately 850 feet in advance of the Exit 101 off-ramp, I-26 begins to transition to provide a third lane, which is fully established approximately 525 feet in advance of the off-ramp. Immediately south of Exit 103 (Harbison Boulevard), I-26 crosses into Lexington

County. Approximately 2,000 feet in advance of Exit 106 (St Andrews Road), the speed limit is reduced to 55 mph.

At Exit 106, two lanes are added. The first additional lane is a continuation of the loop on-ramp from westbound St Andrews Road, while the second lane is a continuation of the on-ramp from eastbound St Andrews Road. This fifth lane drops at the off-ramp to westbound I-20, with the four-lane section traversing the I-20 system interchange (Exit 107). South of the I-20 system interchange, I-26 crosses back into Richland County for a short distance. The four lanes approach the I-126 split, where the left two lanes continue eastbound on I-126 towards downtown Columbia, a "decision lane" continues to either I-126 or I-26, and the right lane continues eastbound on I-26. There is a 50-mph posted advisory speed on the I-26 curve at this split.

I-26 continues eastbound on two lanes crossing back into Lexington County at the Saluda River, where a lane is added from the ramp from westbound I-126. The speed limit increases to 60 mph in this area. I-26 continues with three lanes past Exit 110 (US 378) and exits the study area south of that interchange.

Westbound I-26 enters the study area in Lexington County south of Exit 110 (US 378) as a three-lane section with a posted 60 mph speed limit. The two-lane westbound on-ramp from Exit 110 merges and adds a fourth westbound lane. Approaching the bridge over the Saluda River, the posted speed limit on I-26 is reduced to 55 mph, with the left two lanes designated to continue as I-26 towards Spartanburg and the right two lanes exiting to Bush River Road and I-126 towards Columbia at Exit 108.

As it crosses the Saluda River, I-26 enters Richland County and crosses over I-126 as it curves to the northwest with an advisory speed limit of 50 mph. These two lanes are joined to their left by two westbound lanes continuing from I-126 into I-26, and to their right by a single lane ramp that combines a lane from I-126 and directs traffic to I-20 with the on-ramp from Bush River Road, creating a five-lane section. This five-lane section continues for approximately 1,100 feet until the right lane drops on the off-ramp to eastbound I-20. I-26 continues as a four-lane section through the system interchange with I-20 (Exit 107), where it exits Richland County and re-enters Lexington County.

The on-ramp from westbound I-20 adds a fifth lane to I-26, creating a weaving section approximately 1,300 feet long before the fifth lane drops at Exit 106 (St Andrews Road) as an exit ramp taking traffic to eastbound St Andrews Road. After crossing under the St Andrews Road overpass, the fourth lane drops at the loop off-ramp to westbound St. Andrews Road. From here, I-26 continues westbound as a three-lane section. The posted speed increases to 60 mph approximately 2,200 feet north of the Exit 106 westbound on-ramp. I-26 re-enters Richland County just east of the Harbison Boulevard overpass at Exit 103 and continues west as a three lane, 60 mph section to the west of Exit 101 (Broad River Road). About 550 feet west of the Exit 101 on-ramp, the inside lane begins its merge to create a two-lane section, which begins approximately 1,050 feet to the west. I-26 westbound exits the study area as a two-lane section, transitioning to a 70-mph posted speed limit at a point approximately 2,700 feet west of the Exit 101 on-ramp.

2.1.2 EXIT 103 – HARBISON BOULEVARD (S-32-757/S-40-757)

Exit 103 is a modified diamond interchange, with a westbound loop off-ramp in the northeast quadrant replacing an exit ramp in the southeast quadrant. The eastbound ramp intersection is controlled by a traffic signal. The westbound off-ramp to Harbison Boulevard is aligned opposite Woodcross Drive. This intersection is also controlled by a traffic signal, but the right turn movement from the westbound off-ramp is a free flow movement that enters the westbound right lane of the bridge crossing I-26.

Because of the short ramp length and heavy traffic volume, traffic queues on the westbound off-ramp can extend back into the deceleration lane on westbound I-26. On weekends, traffic heading to the retail areas west of the interchange can be observed backing up onto the mainline.

The existing configuration of Exit 103 is shown in **Figure 2-1**.

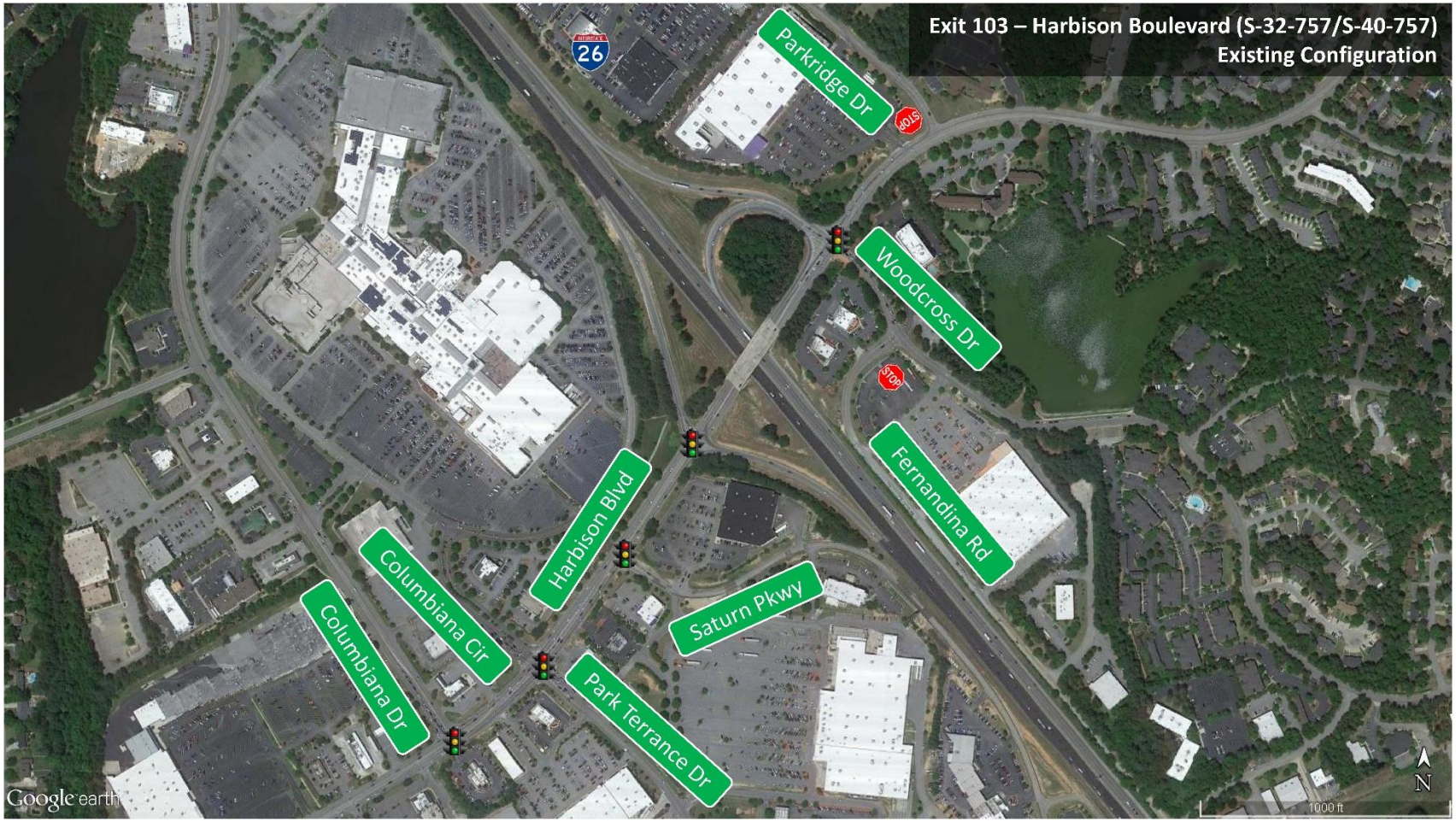

Figure 2-1 - Exit 103 Existing Configuration

2.2 Purpose and Need

The primary purpose of the proposed Carolina Crossroads project is to implement a transportation solution(s) that would improve mobility and enhance traffic operations by reducing existing traffic congestion within the I-20/I-26/I-126 corridor while accommodating future traffic needs. Secondary purposes of the proposed Carolina Crossroads project are to enhance safety throughout the corridor, improve freight mobility, and improve system linkages, while minimizing community and environmental impacts.

The needs for this project were identified through a comprehensive review of previous studies along with the analysis of current data compiled for this study. This includes information in the Traffic Technical Memo and the Accident Analysis Report, as well as that collected through meetings with SCDOT; federal, state and local agencies; project stakeholders, and the public.

2.3 Conceptual Design

As described in the March 2018 *Alternatives Traffic Analysis*, preliminary interchange alternatives capacity screening was completed for six Accessory Options (AOs) at Exit 103 (Harbison Boulevard):

- AO35 – Tight Urban Diamond Interchange
- AO36 – Diverging Diamond Interchange
- AO37 – Single Point Urban Interchange
- AO38 – Roundabout Interchange
- AO39 – Offset Single Point Urban Interchange
- AO49 – Do Nothing

Of these six, three were carried forward as part of the ten representative alternatives analyzed for the 2040 Build conditions that were completed for Level 1B screening as part of the environmental process (AO35, AO37, AO49). Through the screening process, four reasonable alternatives were progressed to Level 3 screening, but only the AO35-Tight Urban Diamond Interchange was included at Exit 103, and therefore, became part of the RRPA.

2.4 Interchange Modification Report Applicant

The interchange policy is administered by the Federal Highway Administration (FHWA). Therefore, FHWA is required to approve all new access or changes in access points pursuant to this policy.

As the owner and operator of the Interstate System, SCDOT is responsible for submitting a formal request to the FHWA in the form of an IMR that documents the analysis, the rationale for the proposed change in access, and the recommended action.

SCDOT is the sponsoring agency for the Carolina Crossroads project. The contact information for the Carolina Crossroads IMR study is provided below:

Brian Klauk, P.E.
Project Manager for Carolina Crossroads
SC Department of Transportation
955 Park St., Columbia, SC 29201

3 Study Area

The proposed project is a transportation corridor improvement project located in Lexington and Richland counties. The overall project study area has been defined as a mainline corridor including I-20 from the Saluda River to the Broad River (approximately four miles), I-26 from Broad River Road to US-378 (approximately nine miles), and I-126 from I-26 to Colonial Life Boulevard (approximately one mile. For this IMR, the study area includes the subject interchange of I-26 with Harbison Boulevard (Exit 103), and the adjacent I-26 interchanges at Lake Murray Boulevard (Exit 102) and Piney Grove Road (Exit 104). **Figure 1-1** illustrates the extent of the Carolina Crossroads study area.

3.1 Demographics

According the the 2010 United State Census Bureau, Lexington County has approximately 262,500 residents and Richland County has approximately 384,500 residents. The counties have seen a steady increase in population since the 1950's. Between 2000 to 2010, Lexington County saw a 17.7% increase in population and Richland County saw a 16.6% increase in population. Select demographics including race, age, poverty and growth percentages of Lexington County and Richland County compared to the state of South Caroline are provided in **Table 3-1.**

Table 3-1 - Population Demographic

Characteristic	Population Demographic		
	South Carolina	Lexington County	Richland County
Minority Population	35.9%	23.3%	55.1%
Percent age 65 and over	14.2%	12.8%	32.5%
Percent income below poverty level	17.7%	23.1%	27.9%
Percent change in population (2000-2010)	15.3%	17.7%	16.6%

Source: U.S. Census Bureau, 2010 Demographic Profile and American Community Survey 5-year Estimates (2009-2013) Tract and Block Group data

Comparisons of the data indicate the percentage minority population in Lexington County (23.3%) is below the reported State percentage (35.9%) while the percentage minority population in Richland County (55.1%) is higher. The Lexington County population age 65 and older is slightly lower when comparing to the State percentage while the Richland County population age 65 and older percentage is more than double compared to the State percentage.

According to the South Carolina Revenue and Fiscal Affairs Office, both Lexington and Richland counties are expected to see a significant population growth by 2040. **Table 3-2** presents the population growth and projections for Lexington County and Richland County.

Table 3-2 - Population Growth

	Population Growth				
County	2000 Population	2010 Population	County	2000 Population	2010 Population
Lexington County	216,000	262,400	384,400	17.7%	46.5%
Richland County	320,700	384,500	464,600	16.6%	20.8%

Source: http//www.sccommunityprofiles.org/census/proj_c2010.html and DEIS. Population numbers have been rounded to the nearest hundred.

3.2 Land Use

Existing land uses immediately fronting Exit 103 and Harbison Bouelvard are predominantly mature commercial developments . In the northwest quadrant of the interchange, some undeveloped land is scattered among commercial and institutional developments fronting Parkridge Drive. Further to the north are additional multifmaily and single family residential developments approaching Lake Murray Bouelvard and Broad River Road. In the northeast quadrant of the interchange, the commercial, retail and multi-family residential uses are located between I-26 and Woodcross Drive. Between Woodcross Drive and Broad River Road, the land uses are exclusively single and multifamily residential with a portion of undeveloped laned fronting Broad River Road.the southeast quadrant of the interchange is filled with retail and commercial developments between I-26 and Bower Parkway. The southeast quadrant is dominated by a regional mall and other commercial and retail outparcels between I-26 and Columbiana Drive. West of Columbiana drive the retail uses transition into a large area of single family homes.

Section 3 of the Carolina Crossroads ***DEIS*** contains additional information concerning land uses adjacent to the Exit 103 interchange within the larger Carolina Crossroads study area. *Figure 3.1-3 Existing land use within a half mile radius of the interchanges*, categorizes and quantifies the existing land use with a half mile radius of each of the service and system interchanges. Land uses quantitied include commercial, industrial, institutional, municpal/county owned, office, parks/recreation, residential, and undeveloped. Based on this figure, the most prevalent land uses and the amount of undeveloped land adjacent to the Exit 103 interchange being analyzed in this study can be described as follows:

- Exit 103 (Harbison Boulevard) interchange: 61 percent commercial, 15 percent residential, 11 percent institutional, and five percent undeveloped

The adjacent interchanges (Exits 102 and 104) have a much lower percentage of commercial development, higher residential development and higher percentages of undeveloped land. At Exit 102 (Lake Murray Boulevard), Commercial development is most prevalent (27 percent) followed by residential development (24 percent). Undeveloped land makes up about 21 percent of the existing land uses within ½ mile of Exit 102. At

Exit 104 (Piney Grove Road), 36 percent of the land use is residential development, while 27 percent is commercial. Undeveloped land makes up about 18 percent of the area surrounding Exit 104.

3.3 Transportation System

The Project study area roadway transportation system is part of the Carolina Crossroads study area depicted in **Figure 1-1**. This region of Lexington and Richland counties is accessed via I-26, I-20 and I-126.

For this IMR, a focused roadway system was evaluated, centering around I-26 Exit 103.

4 Methodology

4.1 Scenarios Analyzed

In March 2018, STV prepared the Alternatives Traffic Analysis report that incorporated the following scenarios:

- Existing Conditions
- 2040 No-Build Conditions (RA10)
- Representative Alternative 1 (RA1)
- Representative Alternative 2 (RA2)
- Representative Alternative 3 (RA3)
- Representative Alternative 4 (RA4)
- Representative Alternative 5 (RA5)
- Representative Alternative 6 (RA6)
- Representative Alternative 7 (RA7)
- Representative Alternative 8 (RA8)
- Representative Alternative 9 (RA9)
- Reasonable Alternative 1
- Reasonable Alternative 1 Modified
- Reasonable Alternative 5
- Reasonable Alternative 5 Modified

Analyses were performed for existing conditions (2015 existing traffic, intersection traffic control and geometry), No-Build conditions (2020, 2025, 2030 and 2040 traffic, and existing intersection traffic control and geometry), each of the nine Representative Alternatives (2040 traffic, and modified intersection traffic control and geometry) and the four Reasonable Alternatives (2020, 2025, 2030 and 2040 traffic and modified intersection traffic control and geometry). Additional measures of effectiveness such as mainline and arterial travel times, and external-to-external speeds/travel times were evaluated for the representative alternatives. These analyses results for the various alternatives were compared against one another to determine which best met the purpose and need with the least impacts and were used to help determine the RRPA for the project.

The final reasonable alternatives were selected to be moved forward in the selection process. Though traffic operations were a consideration in the evaluation of alternatives, other factors, such as construction costs,

business and residential relocations, and environmental impacts were used to identify the reasonable alternatives. RA1 and RA5 were the alternatives which were identified as the reasonable alternatives from the representative alternatives. In addition, RA1 Modified and RA5 Modified were created as reasonable alternatives. The main difference between RA1 and RA1Modified and between RA5 and RA5Modified was the interchange type at Exit 63, I-20 at Bush River Road. RA1 Modified included the ParClo design from RA5 and RA5 Modified included the DDI design from RA1. As documented in the Carolina Crossroads ***DEIS***, RA1 was selected as the RRPA which will be referred to as 2040 Build RRPA Conditions.

The Exit 103 interchange in the RRPA is proposed to be modified as follows:

- The existing I-26 westbound loop off-ramp will be removed, and the ramps will be realigned to provide a tight urban diamond interchange.
- The number of access points to and from I-26 at Exit 103 will not change. Eastbound I-26 will maintain one diverge area and one merge area. Westbound I-26 will also maintain one diverge area and one merge area. These merge areas and eastbound diverge areas are shifted slightly from their existing location. The westbound diverge area will be shifted approximately 1,340 feet east of its current location and will be the terminus of an approximately 3,000 feet long auxiliary lane introduced by the westbound on-ramp at Exit 104.
- The intersection of the realigned eastbound ramps with Harbison Boulevard will be approximately 80 feet to the inside of the existing eastbound ramp intersection. The eastbound off-ramp length will increase from about 1,225 feet to about 1,350 feet in length, and its diverge point will be relocated about 225 feet west of the existing diverge point. The eastbound on-ramp length will increase from about 1,135 feet to about 1,370 feet, and its merge point will be relocated approximately 250 feet east of the existing merge point.
- The intersection of the realigned westbound ramps with Harbison Boulevard will be approximately 240 feet to the inside of the existing westbound ramp intersection with Woodcross Drive. This intersection will be controlled by a traffic signal. The westbound off-ramp length will increase from about 775 feet to about 1,150 feet in length, and its diverge point will be relocated about 1,350 feet east of the existing diverge point. The eastbound on-ramp length will increase from about 1,000 feet to about 1,150 feet, and its merge point will be relocated approximately 275 feet west of the existing merge point.
- With the relocation of the westbound ramps, the existing signalized four-legged intersection of Harbison Boulevard at the westbound ramp/Woodcross Drive intersection will become a signalized T-intersection of Harbison Boulevard and Woodcross Drive.
- The existing five lane bridge crossing I-26 will be replaced by a seven-lane bridge with bike lanes in each direction. The existing multi-use path connecting the mall on the south side of I-26 to the home improvement store on the north side of I-26 will be relocated on the west side of the proposed bridge.

4.2 Traffic Forecasts

Projected traffic volumes were developed using the existing traffic volume data along the mainline interstate and at the interchanges and applying a general uniform annual growth rate to those volumes to estimate 2040 morning and afternoon peak hour traffic. According to the I-20/27/77 CMP study, the AM and PM peak hour 2040 trip tables for the Columbia network were developed based on the subarea analysis of the South Carolina Statewide Model (SCSWM) trip tables. The zonal growth rates between the subarea base year and subarea

future year matrices were applied to the calibrated Columbia Network existing trip tables to develop the 2040 trip tables. Any intrazonal shifts in traffic over time from the current and future year subarea matrices were distributed to ensure that the intended 2040 growth forecasts from the SCSWM were reflected in the 2040 trip tables for the peak hour operational analyses. These 2040 auto trip tables were acquired from the I-20/26/77 CMP study model which were then aggregated to match the Carolina Crossroads matrix developed for the Existing Conditions model. An average growth rate of 0.70 percent was then confirmed within the Carolina Crossroads study area and applied to the existing trip tables

The 2040 peak hour traffic volumes were applied to the freeway, ramp, and intersection traffic to develop the 2040 No-Build and 2040 Build Conditions traffic volumes for use in the assessments of the interchange concepts in the Level 1A and 1B screening. The estimated 2040 volumes along the interstate and at the interchanges are contained in **Appendix B**. The trip tables developed from the CMP were used in the microsimulation analysis of the alternatives, including the reasonable alternatives and the RRPA.

4.3 Traffic Analysis

A series of capacity analyses were performed based on the methodologies and guidelines contained in the Transportation Research Board's publication **HCM 2010 Highway Capacity Manual** (HCM). Various analysis and simulation software packages consistent with the HCM methodologies were used in performing the analyses. These included:

- Trafficware's *Synchro* (Version 9.1.910.24)
    - Unsignalized Intersections
    - Signalized Intersections
- Caliper's *TransModeler* (Version 4.0 Build 6275)
    - Unsignalized Intersections
    - Signalized Intersections
    - Network Simulation
    - Freeway Segments
    - Weaving Segments
    - Ramp Merge/Diverge Areas

Level of Service Criteria

The analysis methodologies contained in the HCM for the various facility types and users describe the operational conditions in terms of a Level of Service (LOS). The HCM defines LOS as

"…a quality measure describing operational conditions within a traffic stream, generally in terms of such service measures as speed and travel time, freedom to maneuver, traffic interruptions, comfort and convenience. Six LOS are defined for each type of facility that has analysis procedures available. Letters designate each level, from A to F, with LOS A representing the best operating conditions and LOS F the worst. Each level of service represents a range of operating conditions and the driver's perception of those conditions. Safety is not included in the measures that establish service levels."

The following discussions and tables describe the HCM LOS criteria for freeway segments, ramp merge/diverge segments, weaving segments, unsignalized intersections and signalization intersections.

Freeway Segments

The HCM characterizes the capacity of a basic freeway segment *"…by three performance measures: density in passenger cars per mile per lane (pc/mi/ln), space mean speed in miles per hour (mi/h), and the ratio of demand flow rate to capacity (v/c). Each of these measures is an indication of how well traffic is being accommodated by the basic freeway segment."* **Table 4-1** shows the HCM LOS criteria for basic freeway segments. LOS F occurs when either the segment density exceeds 45 pc/mi/ln or when the segment v/c ratio exceeds 1.0 (regardless of the segment density).

Table 4-1 - Freeway Segment LOS Criteria

Basic Freeway Segments	
LOS	**Density (pc/mi/ln)**
A	< 11
B	> 11-18
C	> 18-26
D	> 26-35
E	> 35-45
F	> 45 v/c > 1.0

Weaving Segments

Weaving segments occur where two or more streams of traffic traveling in the same direction are able to cross each other without traffic control devices. This typically occurs where a merge area is followed by a diverge area within a relative short distance (usually less than 2,800 feet). The LOS of a weaving segment is also related to the

density of the segment. Regardless of the density, the weaving segment is considered to operate at LOS F when the v/c exceeds 1.0. **Table 4-2** shows the HCM LOS criteria for Freeway Weaving Segments.

Table 4-2 - Weaving Segment LOS Criteria

Freeway Weaving Segments	
LOS	**Density (pc/mi/ln)**
A	< 10
B	> 10-20
C	> 20-28
D	> 28-35
E	> 35
F	v/c > 1.0

Ramp Merge and Diverge Areas

Ramp-freeway junctions occur when merging maneuvers occur (on-ramps) or when diverging maneuvers occur (off-ramps). The operation of these merge and diverge areas are affected by several factors, including the operation of the adjacent freeway segment and the proximity and flow on adjacent ramps. Typically, the influence area of the ramps is 1,500 feet upstream of a diverge point and downstream from a merge point. As with freeway segments and weaving segments, the LOS of a merge or diverge area is related to the density of the segment. Regardless of the density, the merge or diverge areas are considered to operate at LOS F when the freeway demand exceeds the capacity of the upstream freeway segment (at diverge areas) or the downstream freeway segment (at merge areas), as well as when the ramp demand exceeds the ramp capacity. **Table 4-3** shows the HCM LOS criteria for Ramp Merge and Diverge areas.

Table 4-3 - Merge/Diverge LOS Criteria

Ramp Merge and Diverge Areas	
LOS	**Density (pc/mi/ln)**
A	< 10
B	> 10-20
C	> 20-28
D	> 28-35
E	> 35
F	v/c > 1.0

Unsignalized Intersections

The LOS for unsignalized intersections is based on the average control delay per vehicle. Since major street traffic is seldom controlled by STOP signs (except at intersections with ALL-WAY STOP control or in special circumstances), major street traffic generally will experience virtually no delay. Most of the delay will be encountered by traffic on approaches controlled by STOP signs. Under certain conditions, delay will also be encountered by left turning traffic on the major street waiting for appropriately sized gaps in the opposing traffic

flow to complete their turn. Therefore, the delay experienced by STOP controlled movements and major street left turns, rather than the entire average intersection delay, are used to identify the critical LOS at these intersections. **Table 4-4** shows the HCM LOS criteria for unsignalized intersections.

Table 4-4 - Unsignalized Intersection LOS Criteria

Unsignalized Intersections	
LOS	Control Delay (sec/vehicle)
A	< 10
B	> 10-15
C	> 15-25
D	> 25-35
E	> 35-50
F	> 50

Signalized Intersections

The LOS for signalized intersections is based on the average control delay per vehicle. LOS can be identified for the entire intersection, individual intersection approaches, and each movement/lane-group. **Table 4-5** shows the HCM LOS criteria for signalized intersections.

Table 4-5 - Signalized Intersection LOS Criteria

Signalized Intersections	
LOS	Control Delay (sec/vehicle)
A	< 10
B	> 10-20
C	> 20-35
D	> 35-55
E	> 55-80
F	> 80

5 Traffic Volumes

The traffic volumes used in the analysis for the I-26 service interchange at Exit 103 (Harbison Boulevard) consisted of Existing (2015) conditions, and Future (2020, 2025, 2030 and 2040) No-Build and Build Conditions.

5.1 Existing Traffic Volumes

Extensive traffic data collection was performed as part of the Carolina Crossroads project. The data collection effort is summarized in a separate technical report *Traffic Data Collection, Carolina Crossroads*. Data that was collected included vehicle classification/volume counts at the I-20/I-26/I-126 system interchanges, ramp termini turning movement counts, data from mainline Automatic Traffic Recorders (ATR), and regional and ramp-to-ramp origin-destination information.

Additional turning movement count data was collected by SCDOT to extend coverage to include certain intersections adjacent to the ramp termini intersections where the original turning movement counts were collected. Collecting data at these adjacent intersections allowed for accurate traffic volumes to be used in preparing the arterial interchange and the overall network microsimulation models.

A review of the combined turning movement count and system interchange counts indicated that the system-wide morning peak hour was 7:30 to 8:30 AM and the system-wide afternoon peak hour was 4:45 to 5:45 PM. At the system ramps, the morning peak hour was found to be between 7:00 and 8:00 AM, while the afternoon peak hour was found to be 4:00 to 5:00 PM. The design peak hours used for this study was 7:15 to 8:15 AM and 4:45 to 5:45 PM, consistent with the I-20/27/77 CMP Study, and was based on a combination of turning movement peak hour data collected in 15-minute intervals and ramp-termini volumes collected in 60-minute intervals.

The entire collected ATR data, generally covering the period between January 1, 2014 and January 31, 2015, was used to determine the directional freeway volumes by balancing freeway segment volumes selected at an ATR station through the network by adding and subtracting ramp volumes entering and exiting the freeways via service interchange ramps. Mainline volume data derived from the ATR were combined with the system ramp volumes and the turning movement ramp peak hour volumes to develop existing balanced traffic volumes for the study area.

The existing balanced interstate peak hour volumes were based on the 10th highest hour volumes at selected ATR stations. Volumes throughout the network were then determined using volume data collected at the system interchange ramps and turning movement counts at the ramp terminal intersections. The balanced volumes, along with additional turning movement count data at adjacent intersections, were used to establish the observed volumes used during the calibration process of the existing TransModeler network. The calibration of the existing TransModeler network included comparisons of queues observed in the model simulations to field observations of interstate and ramp queuing, local knowledge and familiarity with recurring traffic conditions within the corridor. The existing balanced interstate volumes for Existing Conditions network are also contained in **Appendix A**.

5.2 2040 Traffic Volumes

Two methods were used to develop traffic projections that were applied to elements of the RA development and to the microsimulation of each RA. The first method involved the use of historic traffic data to estimate system-wide annual growth rates to be applied against existing traffic. The second method involved the use of origin-destination data collected as part of the Carolina Crossroads data collection and developed into regional trip tables used in the microsimulation model.

Previously collected existing traffic volume data were used as the basis for the development of the future traffic projections used in the preliminary screening of interchange Accessory Options (AO) and for high level assessment of freeway ramps, and in the microsimulation model network. Traffic projections used to estimate

2040 traffic volumes was based on changes to historic annual average daily traffic (AADT) volumes obtained from SCDOT and from growth forecasts in the South Carolina Statewide Model (SCSWM).

Projected traffic volumes were developed using the existing peak hour volumes along the mainline interstate and at the interchanges and applying a general uniform annual growth rate to those volumes to estimate 2040 morning and afternoon peak hour traffic. For the purposes of the traffic volume projections, a 0.70 percent annual growth rate was used to estimate 2040 peak hour traffic volumes. The 2040 peak hour traffic volumes were applied in the generalized interstate/interchange capacity screenings used to develop the individual RA from a range of prospective AO at each interchange. The 2040 volumes along the interstate and at the interchanges from the 2040 No-Build network are contained in **Appendix B**.

6 Traffic Operations

6.1 TransModeler Network Analysis

TransModeler 4.0, a microsimulation software, was used to analyze the Existing, No-Build, and Build alternative freeway networks and interchange operations. A TransModeler microsimulation model consists of a large component database and executable files that are run through the TransModeler software. One single project file is comprised of network files, traffic control and signal timing plans, vehicle detector layout and configuration, trip tables for both autos and trucks, traffic volumes, and driver/roadway parameter files. This section discusses the development of the existing network based on collected O-D and traffic count data.

The Carolina Crossroads TransModeler network was developed based on a larger, regional network developed as part of the I-20/26/77 Corridor Management Plan (CMP) Study. The CMP study included a calibrated TransModeler model comprised of 110 miles of interstate and freeway, including six system interchanges and 43 service interchanges, in addition to 70 miles of highway, arterial, and local streets. The CMP network, which included the full project limits of the Carolina Crossroads study area, was used to develop the existing Carolina Crossroads microsimulation network. Once the CMP model was reviewed, the Carolina Crossroads network was extracted. A more detailed review was then conducted to assess the operations of the study area. Additional intersections were added and input volumes were verified and adjusted based on existing traffic count data to better define the existing network. A more detailed discussion of how the Carolina Crossroads network was developed can be found in the *Alternatives Traffic Analysis: Carolina Crossroads I-20/I-26/I-126 Corridor Project*.

FHWA generally prefers the use of McTrans' Highway Capacity Software (HCS) in the assessment of freeway operations (freeway segments, merge/diverge area, and weaving sections). There are several limitations of using HCS, which is a macroscopic, deterministic model that uses HCM Methodologies. The HCS analysis may show differing conditions than existing operations and conditions in the field because it does not consider upstream and downstream traffic impacts and is unable to model interactions between the two. The HCS model is essentially a spot check at a certain location; metering of upstream traffic and queuing resulting from congested downstream operations are not considered and will have no effect on the generated analysis. This is not the case for actual conditions, as upstream and downstream congestion may have direct impacts at a specific segment, causing a ripple effect throughout the network. HCS is also limited in its application in

evaluating extremely complex weaving sections, such as those encountered in each direction on I-26 between the Exit 106 (St Andrews Road) service interchange and the Exit 107 system interchange.

TransModeler is a microscopic behavior-based multi-purpose traffic simulation program that takes into consideration vehicle interaction and driver behaviors, as well as the operational impacts for both the upstream and downstream traffic conditions and can measure traffic densities on each segment and lane. For these reasons, TransModeler was used to assess all the freeway segments, merge/diverge areas, and weaving sections instead of HCS.

The design files for each of the Representative Alternatives were converted to KMZ files and imported as a background into the TransModeler microsimulation network. The existing TransModeler network was modified to match the geometry of the KMZ files while maintaining all the external nodes and centroids of the existing network. Therefore, the same origin-destination trip tables were used for each of the alternatives. After updating the geometry to match the design of the representative alternatives, intersection controls were added for the new geometry. Where necessary, Synchro was utilized to develop basic traffic signal timing plans at the signal-controlled intersections.

A simulation-based, Dynamic Traffic Assignment (DTA) was utilized in TransModeler to create travel paths and assign demand volumes across the network for each of the Representative Alternatives. It is reasonable to assume that simulation models using DTA are better predictors of congested networks and may achieve enhanced results than a static traffic assignment method. With each DTA iteration, TransModeler will compute a relative gap between the previous iteration and an equilibrium solution. The DTA was run for 100 iterations with a goal of reaching a relative gap of 0.001. Each model was not able to converge due to the congestion, especially outside the project limits. Additional adjustments were made to the path assignments to remove unreasonable paths created by the DTA. It was assumed that RA10 (No-Build) network path assignments would be consistent with those from the Existing conditions. Therefore, a DTA was not utilized in the analysis of 2040 No Build. 2040 RRPA volumes from the TransModeler analysis are summarized in Appendix B.

The final TransModeler analyses for Existing Conditions, 2040 No-Build conditions, and 2040 Build RRPA conditions were performed using TransModeler 4.0 Build 6275. The Existing Conditions scenario includes the existing number of freeway lanes present on the segments within the study area. The 2040 No-Build conditions and 2040 Build RRPA conditions included additional freeway capacity added as part of the I-20 Widening Project (Mile Markers 49-60) and the I-26 Widening Project (Mile Markers 85 – 101) just outside of the study area. The freeway segment and ramp merge/diverge area analyses were conducted to assess the existing and future operations of the I-20/I-26/I-126 study area:

- Freeway segment and ramp merge/diverge area operations analysis
- Signalized and unsignalized intersection analysis
- Signalized and unsignalized queuing analysis (2040 Build RRPA only)

6.2 Freeway Segment Analyses

The freeway, merge and diverge densities for the I-26, I-20 and I-126 segments were obtained from the TransModeler microsimulation output files, which include an average of ten (10) runs. In calculating density, TransModeler determines the segments and lanes within the influence area for freeway, weaving, merge, and diverge analysis based on roadway classification. The HCM methodology is applied, considering only the vehicles within the influence area.

Each simulation was run for one hour with a 30-minute warm up time. Similar to the CMP Network, the network was pre-loaded prior to the 30-minute warm up time which simulates peak period congestion.

It should be noted that due to the high demand volumes, the network was not able to accommodate the demand volume in both the Existing and No-Build simulations. Extensive queuing was observed outside of the network at the freeway entry points, particularly in the 2040 No-Build scenario, at the end of the peak hour simulation during both the morning and afternoon peak hours.

The basic freeway, weaving, merge and diverge segment analysis outputs for the Existing Conditions, 2040 No-Build conditions and the 2040 RRPA conditions are provided in **Appendix C** and a summary of results is shown in **Table 6-2** through **Table 6-4**.

The analysis results for the freeway segments in Existing, 2040 No-Build, and 2040 RRPA conditions are summarized in **Table 6-2.** Existing Conditions results indicate the following:

- During the morning peak hour:
  - I-26 eastbound freeway segments operate at LOS F or E.
  - I-26 westbound freeway segment operates at LOS D.
- During the afternoon peak hour:
  - I-26 eastbound freeway segment operates at LOS C.
  - I-26 westbound freeway segments operate at LOS E.

With traffic volumes projected to increase at an annual rate of 0.70 percent per year, if Exit 103 (Harbison Boulevard) is not modified, the increased traffic volumes traveling on I-26 will results in increased density and reductions of freeway segment LOS between Exit 102 (Lake Murray Boulevard) and Exit 104 (Piney Grove Road) for 2040 No-Build conditions.

- During the morning peak hour:
  - The I-26 eastbound freeway segments operate at LOS F and I-26 westbound freeway segments operate at LOS D.
- During the afternoon peak hour:
  - The I-26 eastbound freeway segments operate at LOS D and the westbound freeway segments operate at LOS F or E.

The additional capacity provided by the RRPA will result in generally comparable LOS in the morning and afternoon peak hours compared to the Existing Conditions, and improved LOS over the 2040 No-Build conditions. The analysis for the freeway segment for the 2040 RRPA conditions are as follows:

- During the morning peak hour:
  - The I-26 eastbound freeway segments operate at LOS E and I-26 westbound freeway segments operate at LOS C.
- During the afternoon peak hour:
  - The I-26 eastbound freeway segments operate at LOS C and the westbound freeway segments operate at LOS E or D.

6.3 Merge Area Analyses

The analysis results for the merge areas in Existing, 2040 No-Build, and 2040 RRPA conditions are summarized in **Table 6-3.** Existing Conditions results indicate the following:

- During the morning peak hour:
  - The I-26 eastbound merge areas at Exit 102 (Lake Murray Boulevard) and Exit 103 (Harbison Boulevard) operate at LOS F.
  - The I-26 westbound merge areas at Exit 104 (Piney Grove Road) and Exit 103 operate at LOS B.
- During the afternoon peak hour:
  - The I-26 eastbound merge areas at Exit 102 and Exit 103 operate at LOS D or C.
  - The I-26 westbound merge areas at Exit 104 and Exit 103 operate at LOS F or E.

With traffic volumes projected to increase at an annual rate of 0.70 percent per year, if Exit 103 is not modified, the increased traffic volumes traveling on I-26 will results in increased density and reductions of merge area LOS between Exit 102 and Exit 104 for 2040 No-Build.

- During the morning peak hour:
  - The I-26 eastbound merge areas at Exit 102 and Exit 103 operate at LOS F
  - The I-26 westbound merge areas at Exit 104 and Exit 103 operate at LOS C.
- During the afternoon peak hour:
  - The I-26 eastbound merge area at Exit 102 operates at LOS B while the Exit 103 merge area operates at LOS E.
  - The I-26 westbound merge areas at Exit 104 and Exit 103 operate at LOS E.

The additional capacity provided by the RRPA will result in generally comparable LOS in the morning and afternoon peak hours compared to the Existing Conditions, and improved LOS over the 2040 No-Build conditions. The analysis for the merge area for the 2040 RRPA conditions are as follows:

- During the morning peak hour:
  - The I-26 eastbound merge area at Exit 102 operates at LOS D, while the Exit 103 merge area operates at LOS E
  - The I-26 westbound merge areas at Exits 104 and 103 operate at LOS C.
- During the afternoon peak hour:
  - The I-26 eastbound merge areas operate at LOS B at Exit 102 and at LOS C at Exit 103
  - The I-26 westbound merge areas operate at LOS D at Exit 104 and at LOS E at Exit 103.

6.4 Diverge Area Analyses

The analysis results for the diverge areas in Existing, 2040 No-Build, and 2040 RRPA conditions are summarized in **Table 6-4.** Existing Conditions results indicate the following:

- During the morning peak hour:
  - The I-26 eastbound diverge areas at Exit 103 (Harbison Boulevard) and Exit 104 (Piney Grove Road) operate at LOS F.
  - The I-26 westbound diverge areas at Exit 103 and Exit 102 (Lake Murray Boulevard) operate at LOS C or better.
- During the afternoon peak hour:
  - The I-26 eastbound diverge areas at Exit 103 and Exit 104 operate at LOS D or better.
  - The I-26 westbound diverge areas at Exit 103 and Exit 102 operate at LOS D and E, respectively.

With traffic volumes projected to increase at an annual rate of 0.70 percent per year, if Exit 103 is not modified, the increased traffic volumes traveling on I-26 will results in increased density and reductions of diverge area LOS between Exit 102 and Exit 104.

- During the morning peak hour:
  - The I-26 eastbound diverge areas at Exit 103 and Exit 104 operate at LOS F.
  - The I-26 westbound diverge areas at Exit 103 and Exit 102 operate at LOS D or better.
- During the afternoon peak hour:
  - The I-26 eastbound diverge areas at Exit 103 and Exit 104 operate at LOS D and E, respectively.
  - The I-26 westbound diverge areas at Exit 103 and Exit 102 operate at LOS E.

The additional capacity provided by the RRPA will result in generally comparable LOS in the morning and afternoon peak hours compared to the Existing Conditions, and improved LOS over the 2040 No-Build conditions. The analysis for the diverge area for the 2040 RRPA conditions are as follows:

- During the morning peak hour:
  - The I-26 eastbound diverge areas at Exit 103 and Exit 104 operate at LOS D and E, respectively.
  - The I-26 westbound diverge areas at Exit 103 and Exit 102 operate at LOS C.
- During the afternoon peak hour:
  - The I-26 eastbound diverge areas at Exit 103 and Exit 104 operate at LOS C.
  - The I-26 westbound diverge areas at Exit 103 and Exit 102 operate at LOS D and E, respectively.

Table 6-1 - I-26 Freeway Segment Capacity Analysis – Existing, 2040 No-Build, and 2040 Build RRPA

Freeway Segment	Existing Conditions				2040 No Build Conditions				2040 Build RRPA Conditions			
	AM Peak Hour		PM Peak Hour		AM Peak Hour		PM Peak Hour		AM Peak Hour		PM Peak Hour	
	LOS[1]	Density[2]	LOS[1]	Density[2]	LOS[1]	Density[2]	LOS[1]	Density[2]	LOS[1]	Density[2]	LOS[1]	Density[2]
I-26 Eastbound												
Exit 102 to Exit 103	F	48.8	C	24.7	F	122.0	D	31.4	E	40.9	C	25.9
Exit 103 to Exit 104	E	44.3	C	24.1	F	126.6	D	31.2	E	35.7	C	23.4
I-26 Westbound												
Exit 104 to Exit 103	D	27.0	E	43.3	D	34.2	F	45.9	C	21.4	D	34.4
Exit 103 to Exit 102	D	27.2	E	38.0	D	30.4	E	39.1	C	22.6	E	42.5

[1] Per Highway Capacity Manual 2010 criteria.

[2] Density expressed as PCE/per mile/per lane.

Table 6-2 - I-26 Ramp Merge Capacity Analysis – Existing, 2040 No-Build, and 2040 Build RRPA

Merge Area	Existing Conditions				2040 No Build Conditions				2040 Build RRPA Conditions			
	AM Peak Hour		PM Peak Hour		AM Peak Hour		PM Peak Hour		AM Peak Hour		PM Peak Hour	
	LOS[1]	Density[2]	LOS[1]	Density[2]	LOS[1]	Density[2]	LOS[1]	Density[2]	LOS[1]	Density[2]	LOS[1]	Density[2]
I-26 Eastbound												
Exit 102	F	50.0	C	27.3	F	69.0	B	16.8	D	28.4	B	16.8
Exit 103	F	62.3	C	27.3	F	112.3	E	43.6	E	35.7	C	23.4
I-26 Westbound												
Exit 104	B	18.6	E	37.7	C	24.9	E	43.7	C	21.4	D	34.4
Exit 103	B	19.8	E	35.2	C	27.6	E	36.5	C	22.6	E	42.5

[1] Per Highway Capacity Manual 2010 criteria.

[2] Density expressed as PCE/per mile/per lane.

Table 6-3 - I-26 Ramp Diverge Capacity Analysis – Existing and 2040 No-Build, and 2040 Build RRPA

Diverge Area	Existing Conditions				2040 No Build Conditions				2040 Build RRPA Conditions			
	AM Peak Hour		PM Peak Hour		AM Peak Hour		PM Peak Hour		AM Peak Hour		PM Peak Hour	
	LOS[1]	Density[2]	LOS[1]	Density[2]	LOS[1]	Density[2]	LOS[1]	Density[2]	LOS[1]	Density[2]	LOS[1]	Density[2]
I-26 Eastbound												
Exit 103	F	48.8	C	24.7	F	122.0	D	31.4	D	33.3	C	23.0
Exit 104	F	63.6	D	28.2	F	110.6	E	44.6	E	35.7	C	23.4
I-26 Westbound												
Exit 103	B	18.1	D	32.5	C	24.1	E	36.3	C	21.4	D	34.4
Exit 102	C	22.0	E	36.1	D	28.3	E	37.5	C	22.6	E	42.5

[1] Per Highway Capacity Manual 2010 criteria.

[2] Density expressed as PCE/per mile/per lane.

6.5 Intersection Capacity Analysis

Capacity analyses for the signalized and unsignalized intersections at the study interchanges were performed using TransModeler software. Preminary interchange alternatives capacity screening analysis was completed and documented in the *Alternatives Traffic Analysis Technical Memo.* Detailed analyses for Exit 103 (Harbison Boulevard) under existing conditions (existing traffic, intersection traffic control and geometry), 2040 No-Build conditions (2040 traffic, and existing interection traffic control and geometry) and 2040 Build conditions (2040 traffic and modified intersection traffic control and geometry) are summarized in the following sections.

The signalized and unsignalized intersection analyses were obtained from the TransModeler microsimulation output files, which include an average delay of ten (10) runs. For unsignalized intersections, the intersection operation is represented by the worst approach delay and LOS of all of the STOP-controlled appraches to the intersection. TransModeler measures control delay in accordance with HCM methodology and considers vehicles as soon as they being to brake to join the back of a queue forming at an intersection until it has passed through the intersection and returned to speed.

For unsignalized intersections, the intersection operation is represented by the worst approach delay and LOS of all of the STOP-controlled appraches to the intersection. The comparision results of the capacity analyses for Existing Conditions and the 2040 No-Build conditions are shown in **Table 6-4** and in **Figure 6-1**. The average control delay for each run from TransModeler for each intersection are provided in **Appendix D**.

Under the Existing conditions, all intersections operate at LOS D or better during both the morning and afternoon peak hour. Under the 2040 No-Build conditions, all intersections operate at LOS D or better during both the morning and afternoon peak hour.

For the RRPA, the individual interchanges were modeled using Synchro/SimTraffic to analyze and simulate the arterial and intersection operations and to aid in the development of traffic control and geometric recommendations. As discussed in the *Alternative Traffic Analysis Technical Memo Report*, the arterials coded into the TransModeler network were verified and adjusted based on existing conditions and collected traffic data. Due to the limitations of Synchro's dynamic assignment of volumes and modeling of static volumes only, intersection capacity analysis for the RRPA was also conducted in the Transmodeler network to account for shifted traffic from existing interchange configuration to 2040 Build RRPA interchange configuration. Those analyses will be discussed below.

As part of the 2040 Build RRPA intersection capacity analysis, queue reports were obtained from the TransModeler output files. TransModeler reports queue lengths in two ways, as lane queues and as spillback queues. Lane queues are measured by lane, but do not measure beyond the upstream superlink approach. However, spillback queues capture the full, dynamic length even if queues branch in different directions. Both lane queues and spillback queues are provided at the ramp terminal intersections and adjacent intersections along the arterials.

Table 6-4 - Intersection Capacity Analysis Results - Existing Vs. 2040 No-Build

Intersection #	Intersection Name	2015 Existing Conditions				2040 No Build Conditions			
		AM Peak		PM Peak		AM Peak		PM Peak	
		LOS	Delay	LOS	Delay	LOS	Delay	LOS	Delay
	Exit 106								
100000364	Harbison Boulevard at Columbiana Drive	B	10.6	A	8.6	B	11.0	A	9.3
100000365	Harbison Boulevard at Park Terrace Drive / Columbiana Circle	A	9.6	B	18.8	B	11.5	C	21.4
100000362	Harbison Boulevard at Saturn Parkway	A	0.5	A	1.3	A	0.8	A	2.1
100000173	Harbison Boulevard atI-26 EB Ramps	A	8.1	A	9.3	A	8.3	B	10.1
100000165	Harbison Boulevard at I-26 WB Ramps / Woodcross Drive	B	19.9	D	50.0	C	22.3	D	54.7
100000398	Harbison Boulevard at Parkridge Drive[1]	A	8.8	A	9.6	A	8.9	A	8.8

[1] Intersection unsignalized under all scenarios; worst approach LOS and delay reported.



Figure 6-1 - Exit 103 – Harbison Boulevard Intersection LOS Summary

Capacity Analysis results at Exit 103 for 2040 Build RRPA Conditions are summarized in **Table 6-5** and below.**Table 6-6** summarizes queue length results for Exit 103.

Exit 103 – Harbison Boulevard

The existing configuration of Exit 103 is expected to be replaced with a Tight Urban Diamond Interchange (TUDI) as part of the RRPA. The major elements of the proposed interchange relating to the ramps are discussed in section 4.1. The elements related to the ramp termini intersections and intersections on Harbison Boulevard adjacent to the ramp termini intersections include:

- Relocating the I-26 eastbound ramp intersection about 80 feet to the inside of the interchange. The intersection will operate under traffic signal control.
- Relocating the I-26 westbound ramp intersection about 240 feet to the inside of the existing westbound ramp intersection. The intersection will operate under traffic signal control.
- Changing the intersection of Harbison Boulevard at Woodcross Drive to a T-intersection controlled by a traffic signal. The intersection location will remain unchanged.
- The Harbison Boulevard intersection with Saturn Parkway will remain at its existing location but will be modified slightly to provide a third westbound through lane through the intersection.
- The intersection of Harbison Boulevard and Columbiana Circle/Park Terrace Drive will remain at its existing location. It will be modified slightly to drop the third westbound through lane from the interchange as a right turn lane.
- The intersection of Harbison Boulevard and Columbiana Drive will not be affected other than by tying the reconstructed portions of Harbison Boulevard from the interchange into the existing portion of Harbison Boulevard.
- The intersection of Harbison Boulevard and Parkridge Drive will be under signal operation based on projected trips under 2040 Build RRPA conditions.

The 2040 Build RRPA configuration for Exit 103 is depicted in **Figure 6-2**. Under the 2040 Build RRPA conditions, all intersections operate at LOS D or better during both the morning and afternoon peak hour.



Figure 6-2 - Exit 103 – Harbison Boulevard RRPA Configuration

Table 6-5 - Intersection Capacity Analysis Results – 2040 Build RRPA

Intersection #	Intersection Name	2040 Build RRPA Conditions			
		AM Peak		PM Peak	
		LOS	Delay	LOS	Delay
100000364	**Harbison Boulevard at Columbiana Drive**	B	15.6	D	36.2
100000365	**Harbison Boulevard at Park Terrace Drive / Columbiana Circle**	A	8.3	C	30.2
100000362	**Harbison Boulevard at Saturn Parkway**	A	0.7	A	6.7
104	**Harbison Boulevard at I-26 EB Ramps**	A	9.9	B	16.4
99	**Harbison Boulevard at I-26 WB Ramps**	C	30.8	D	43.9
100000165	**Harbison Boulevard at Woodcross Drive**	B	17.0	C	31.3
100000398	**Harbison Boulevard at Parkridge Drive** (signalized)	B	11.0	B	12.8

Table 6-6 - 2040 Build RRPA Intersection Queue Lengths

Intersection #	Intersection Name	Lane Group	AM Peak Hour 95th Percentile Queue Length (ft)	AM Peak Hour Maximum Spillback Queue Length (ft)	PM Peak Hour 95th Percentile Queue Length (ft)	PM Peak Hour Maximum Spillback Queue Length (ft)	Available Storage Length (ft)
100000364	**Harbison Boulevard at Columbiana Drive**	NBL	0	0	0	0	50
		NBT	0		0		
		NBR	0		0		
		SBL	275	325	1,200	1,250	250
		SBT	0		225		1,000
		SBR	25		150		
		EBL	25	150	50	200	150
		EBT	100		125		900
		EBTR	100		150		
		WBL	0	275	0	250	100
		WBT	175		150		350
		WBTR	225		200		
100000365	**Harbison Boulevard at Park Terrace Drive/Columbiana Circle**	NBL	25	75	300	575	125
		NBTR	50		175		700
		SBL	25	50	125	200	275
		SBTR	25		50		625
		EBL	50	125	75	425	225
		EBT	75		200		350
		EBR	25		25		100
		WBL	75	225	75	450	225
		WBT	200		375		525
		WBR	25		175		
100000362	**Harbison Boulevard at Saturn Parkway**	NBR	25	25	100	125	175
		EBT	25	75	325	750	425
		EBTR	75		175		425
		WBL	25	25	0	50	150
		WBT	0		0		525
104	**Harbison Boulevard at I-26 EB Ramps**	SBL	200	300	50	275	550
		SBR	75		150		1,300
		EBT	50	25	350	50	525
		EBR	50		350		475
		WBL	200	225	225	300	150
		WBT	50		150		525
99	**Harbison Boulevard at I-26 WB Ramps**	NBL	325	450	275	625	525
		NBR	100		425		1,150
		EBL	25	100	550	1,050	350
		EBT	50		150		525
		WBT	75	325	125	725	125
		WBTR	25		125		
100000165	**Harbison Boulevard at Woodcross Drive**	NBL	150	225	250	375	400
		NBLR	150		300		
		EBT	50	125	75	675	125
		EBTR	50		125		125
		WBL	150	175	225	575	100
		WBT	50		325		550
100000398	**Harbison Boulevard at Parkridge Drive**	SBL	175	250	125	200	700
		SBR	75		100		
		EBLT	0	175	175	575	300
		EBT	25		50		550
		WBT	50	125	75	275	3,500
		WBTR	50		200		

7 Interchange Justification

A policy statement for justifying the need for additional or modified access to the existing sections of an Interstate System was first published in the Federal Register on October 22, 1990 entitled "Access to the Interstate System". It was then modified and updated on February 11, 1998, on August 27, 2009, and on May 22, 2017. The objections of this policy are to ensure that all new or revised access points do not adversely impact the operations and safety of the Interstate System, and all new or revised access points have been vetted through a systematic evaluation process.

In order to explain the intent and requirements of this new policy, FHWA published a Memorandum on May 22, 2017. This FHWA Guide was followed in preparing the current Interchange Modification Report (IMR) for the I-26 Exit 103 (Harbison Boulevard) Interchange in Lexington and Richland Counties, South Carolina.

7.1 Policy Point 1

An operational and safety analysis has concluded that the proposed change in access does not have a significant adverse impact on the safety and operation of the Interstate facility (which includes mainline lanes, existing, new, or modified ramps, ramp intersections with crossroad) or on the local street network based on both the current and the planned future traffic projections. The analysis should, particularly in urbanized areas, include at least the first adjacent existing or proposed interchange on either side of the proposed change in access (23 CFR 625.2(a), 655.603(d) and 771.111(f)). The crossroads and the local street network, to at least the first major intersection on either side of the proposed change in access, should be included in this analysis to the extent necessary to fully evaluate the safety and operational impacts that the proposed change in access and other transportation improvements may have on the local street network (23 CFR 625.2(a) and 655.603(d)). Requests for a proposed change in access should include a description and assessment of the impacts and ability of the proposed changes to safely and efficiently collect, distribute, and accommodate traffic on the Interstate facility, ramps, intersection of ramps with crossroad, and local street network (23 CFR 625.2(a) and 655.603(d)). Each request should also include a conceptual plan of the type and location of the signs proposed to support each design alternative (23 U.S.C. 109(d) and 23 CFR 655.603(d)).

The intent of Policy Point 1 is to require detailed operational and safety analysis of the relevent interstate segments and provide a comparison of the no-build and build conditions that are anticipated to occur through the design year of the project.

The analysis of the I-26 interstate facilities, the I-26 interchange at Exit 103, and the adjacent interchanges at Exits 102 (Lake Murray Boulevard) and 104 (Piney Grove Road) is an extension of the previous project wide traffic operations and safety analyses as summarized in the *Alternatives Traffic Analysis: Carolina Crossroads I-20/I-26/I-126 Corridor Project, Crash Analysis: Carolina Crossroads I-20/I-26/I-126 Corridor Project*. The analysis was performed using methodologies and procedures outlined in the Transportation Research Board's *Highway Capacity Manual* and used the TransModeler micro-simulation modeling software.

The Refined Recommended Preferred Alternative (RRPA) at Exit 103 replaces the existing modified diamond interchange with a westbound loop off-ramp in the northeast quadrant with a tight urban diamond. The number of existing access points to and from I-26 at Exit 103 will not change. Eastbound I-26 will maintain one diverge area and one merge area. Westbound I-26 will also maintain one diverge area and one merge area. These merge areas and eastbound diverge areas are shifted slightly from their existing location. The westbound diverge area will be shifted approximately 1,340 feet east of its current location and will be the terminus of an approximately 3,000 feet long auxiliary lane introduced by the westbound on-ramp at Exit 104. The length of the auxiliary lane is sufficient so that traffic will operate more like a merge at Exit 104 and diverge at Exit 103, and not like a weaving section.

The analysis of the 2040 Build condition of the RRPA illustrates that the project would not have any significant negative impact on the safety and the operation of the facilities within the project area. The analysis shows the eastbound freeway segments are projected to operate at LOS E and LOS C in the during the morning and afternoon peak hours, respectively. In the westbound direction, the freeway segments are expected to operate at LOS C and LOS D/E during the morning and afternoon peak hours, respectively. However, the density is generally better than existing conditions. Similarly, the merge and diverge areas within the study area are expected to operate at similar or better LOS than existing. Most notably, the eastbound merge and diverge areas in the morning peak hour are expected to improve from LOS F to LOS D and E at Exit 103 and 104, respectively.

Pedestrian and bicycle facilities will be incorporated along Harbison Boulevard through the proposed Exit 103 interchange.

A conceptual signing plan for the RRPA is provided in **Appendix E**.

7.2 Policy Point 2

The proposed access connects to a public road only and will provide for all traffic movements. Less than "full interchanges" may be considered on a case-by-case basis for applications requiring special access, such as managed lanes (e.g., transit, HOVs, HOT lanes) or park and ride lots. The proposed access will be designed to meet or exceed current standards (23 CFR 625.2(a), 625.4(a)(2), and 655.603(d)). In rare instances where all basic movements are not provided by the proposed design, the report should include a full-interchange option with a comparison of the operational and safety analyses to the partial-interchange option. The report should also include the mitigation proposed to compensate for the missing movements, including wayfinding signage, impacts on local intersections, mitigation of driver expectation leading to wrong-way movements on ramps, etc. The report should describe whether future provision of a full interchange is precluded by the proposed design.

The intent of Policy Point 2 is to require implementation of interchange design for interstate access that allows for all relevant movements for general purpose traffic, whenever feasible.

The existing at I-26 and Harbison Boulevard (Exit 103) provide for all traffic movements to and from I-26. The proposed modifications to Exit 103 will continue to provide for all traffic movements to and from I-26.

Appendix A—Existing Peak Hour Volumes

Balanced 2015 Existing
Peak Hour Volumes

Carolina Crossroads
Existing Interchange Volumes

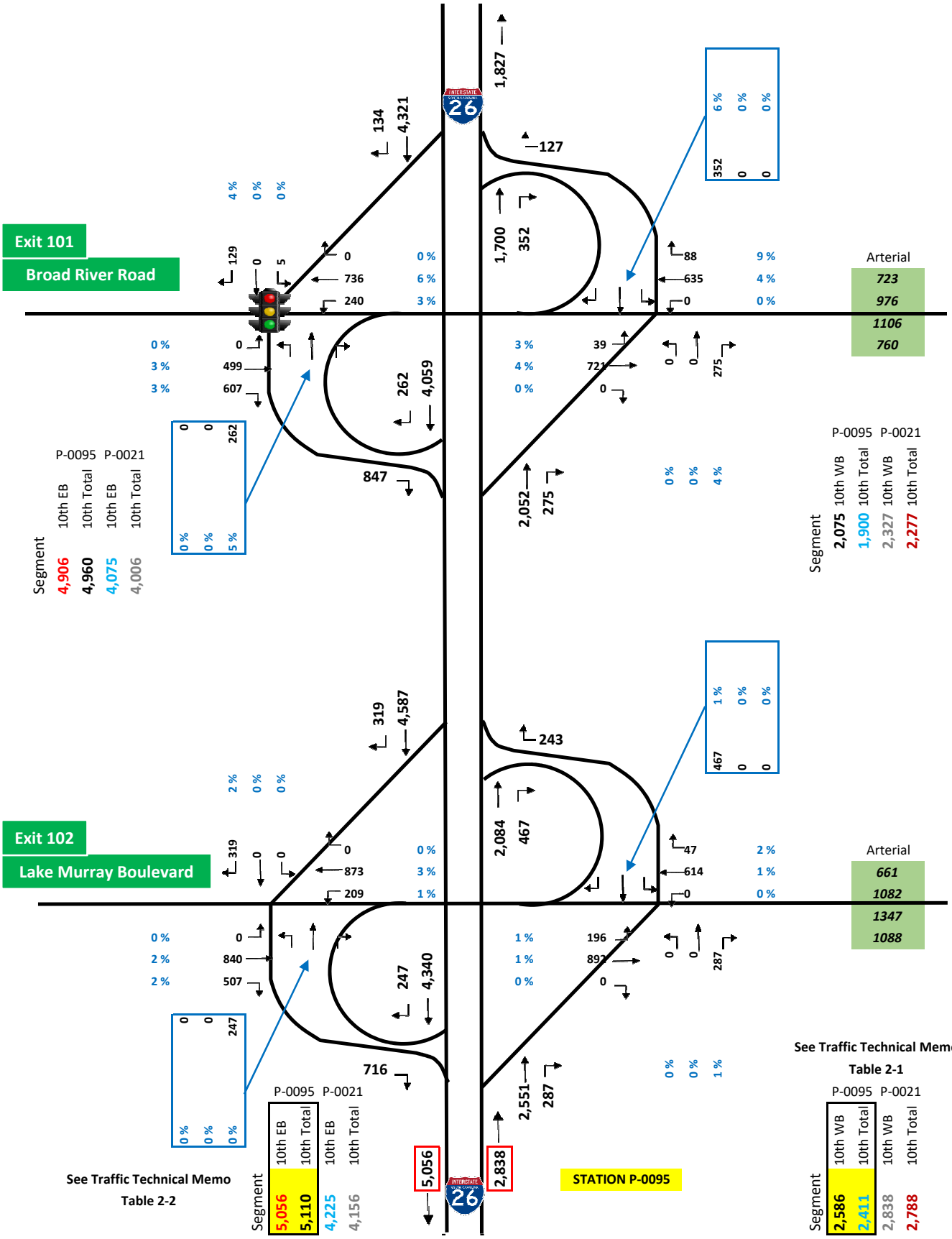

AM MAINLINE VOLUME BALANCING

Carolina Crossroads
Existing Interchange Volumes

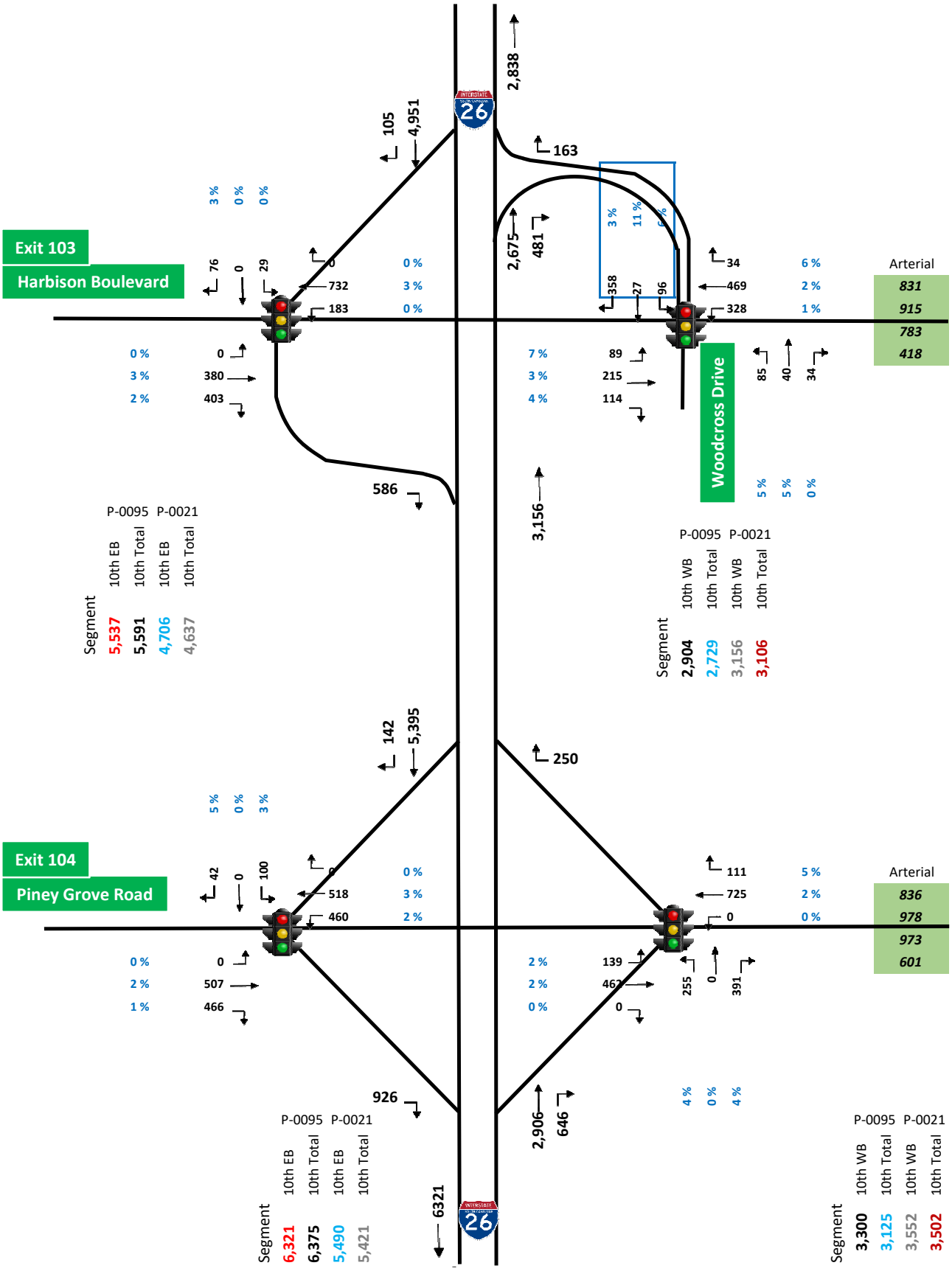

AM MAINLINE VOLUME BALANCING

Carolina Crossroads
Existing Interchange Volumes

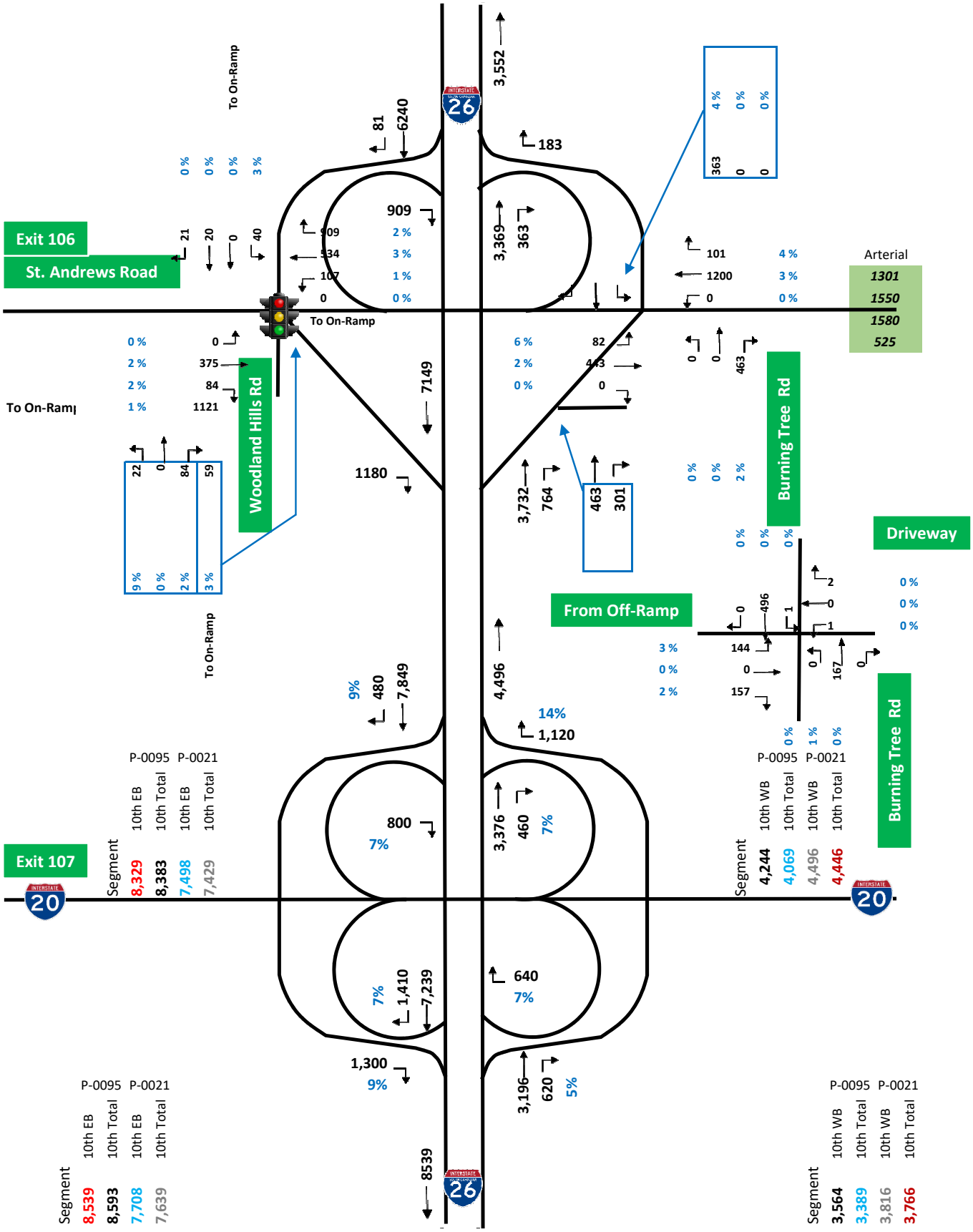

AM MAINLINE VOLUME BALANCING

Carolina Crossroads
Existing Interchange Volumes

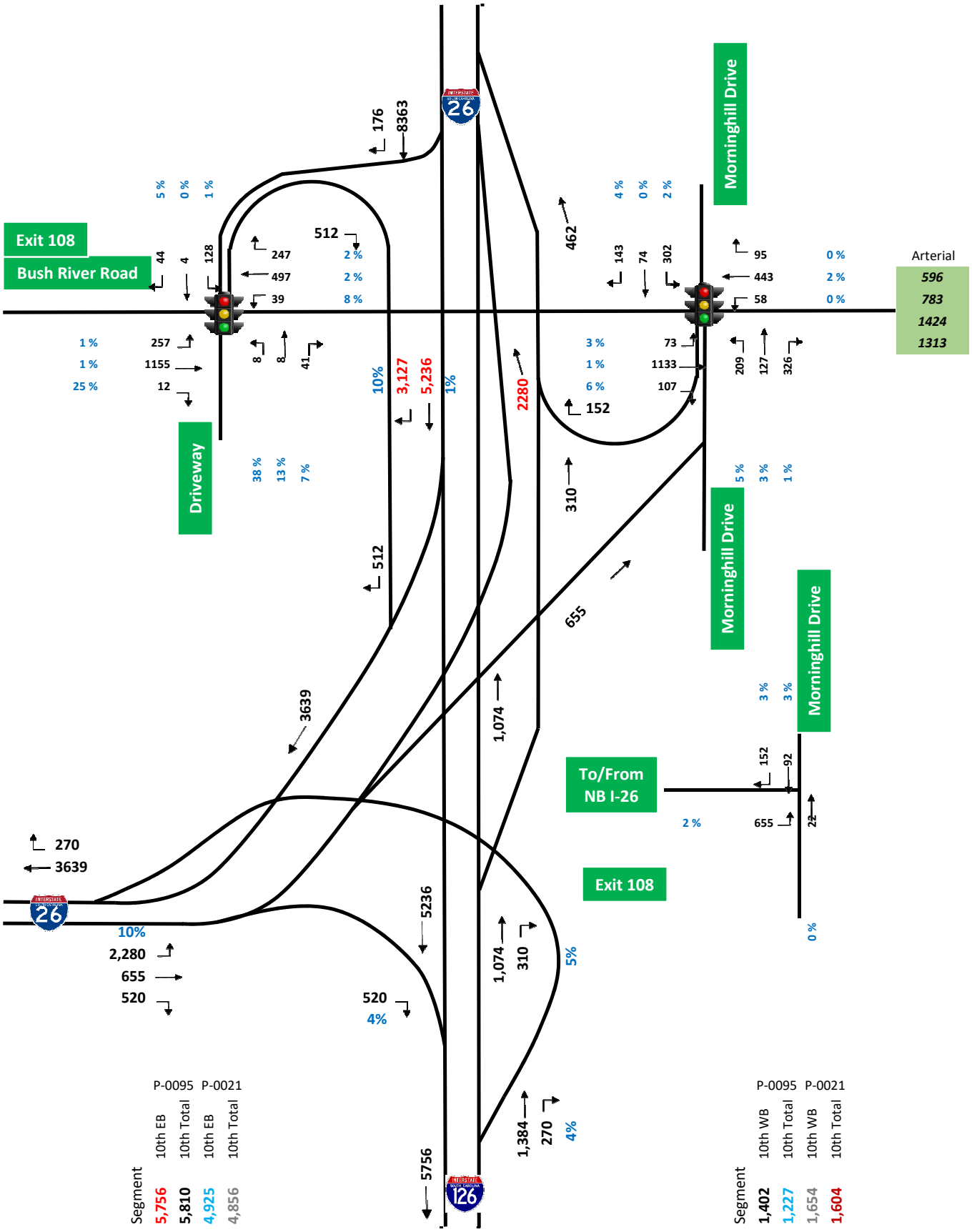

AM MAINLINE VOLUME BALANCING

Carolina Crossroads
Existing Interchange Volumes

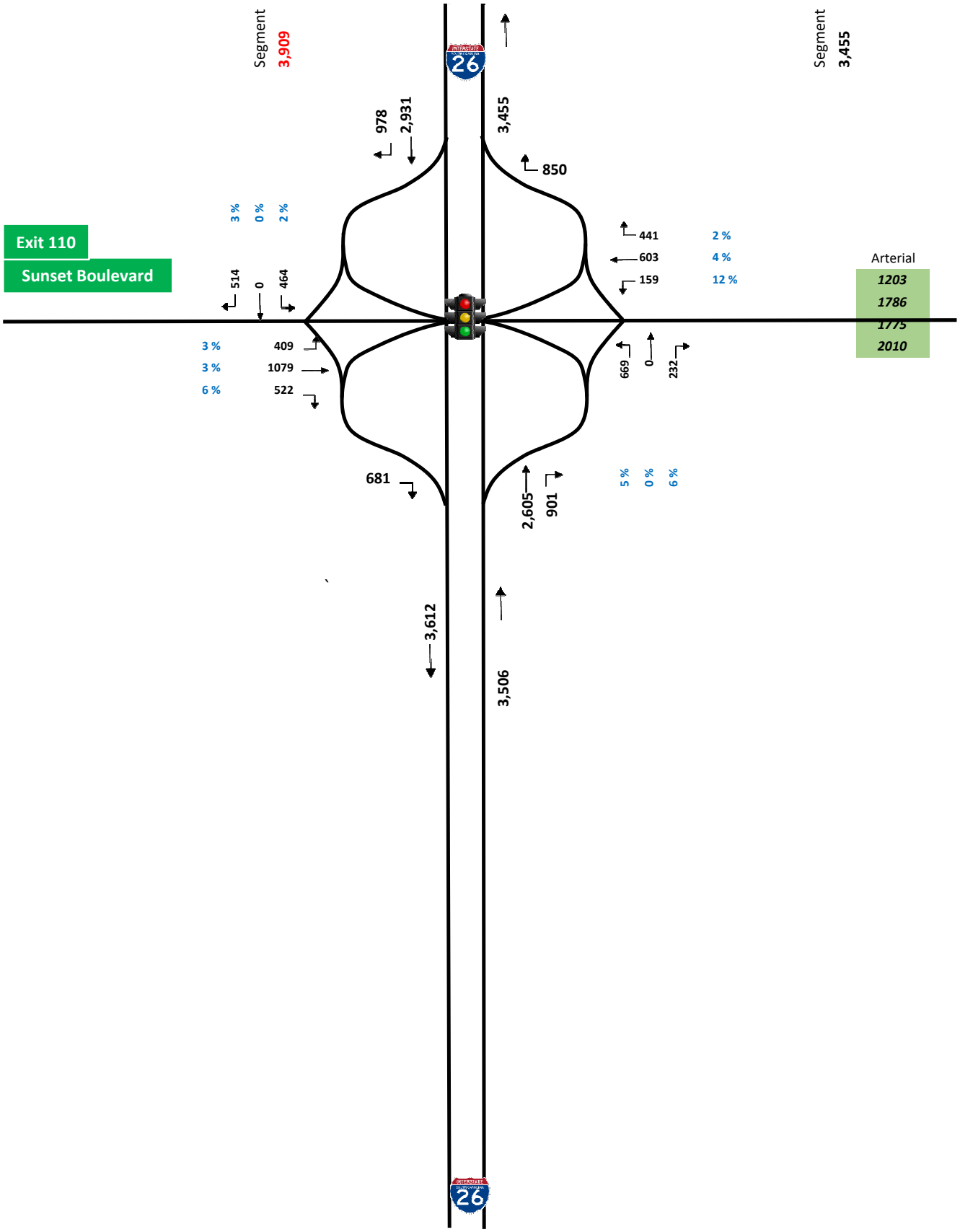

AM MAINLINE VOLUME BALANCING

Carolina Crossroads
Existing Interchange Volumes

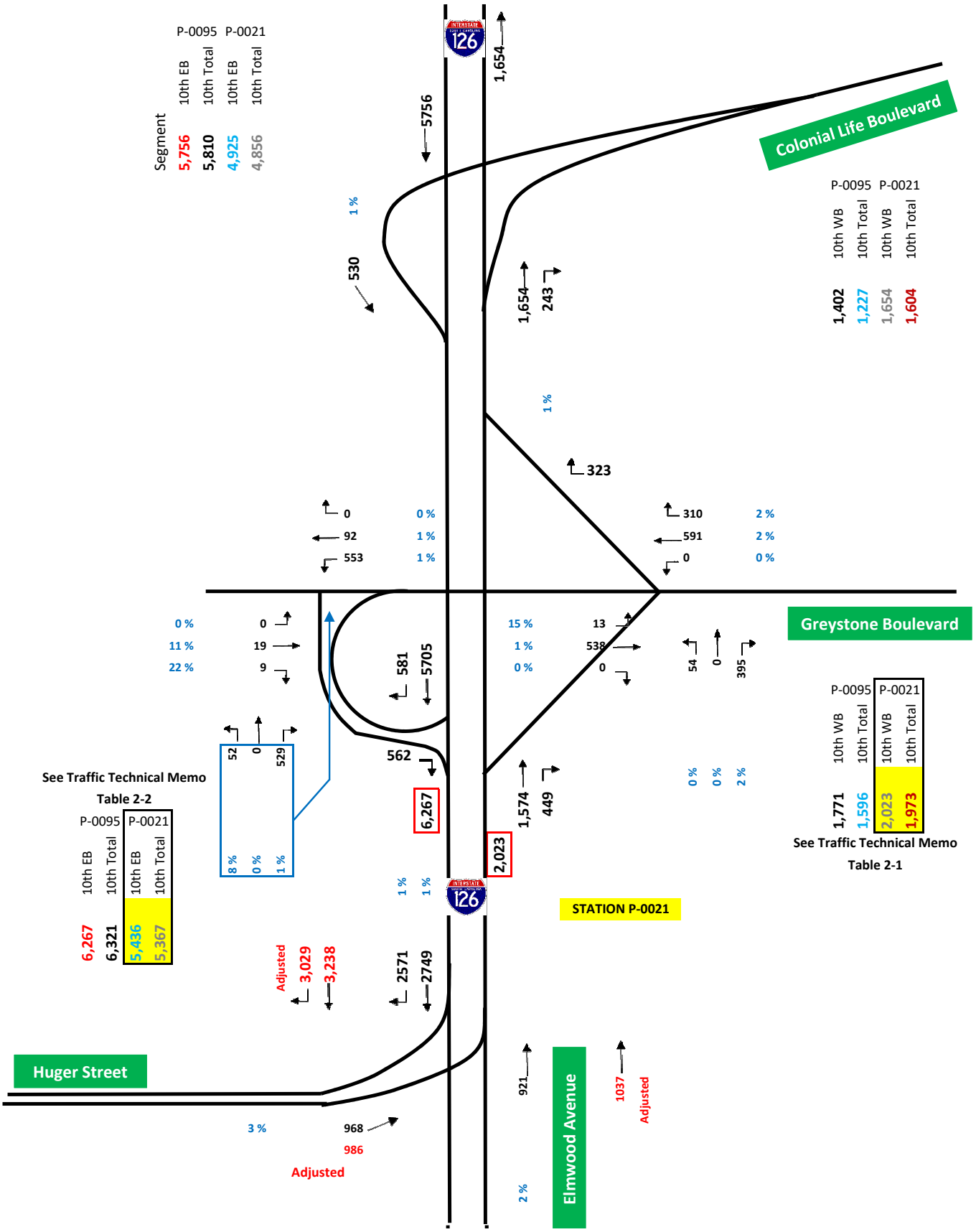

AM MAINLINE VOLUME BALANCING

Carolina Crossroads
Existing Interchange Volumes

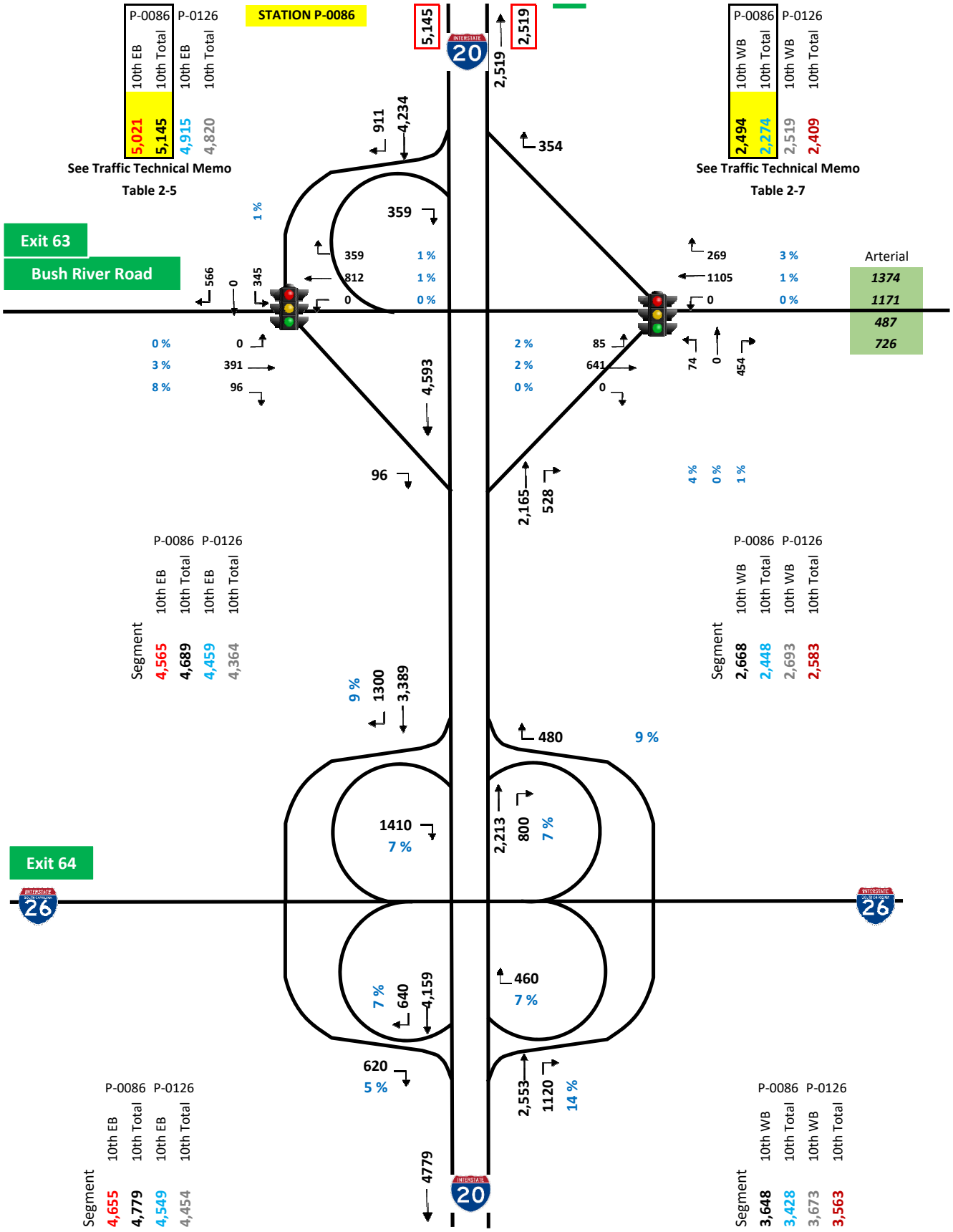

AM MAINLINE VOLUME BALANCING

Carolina Crossroads
Existing Interchange Volumes

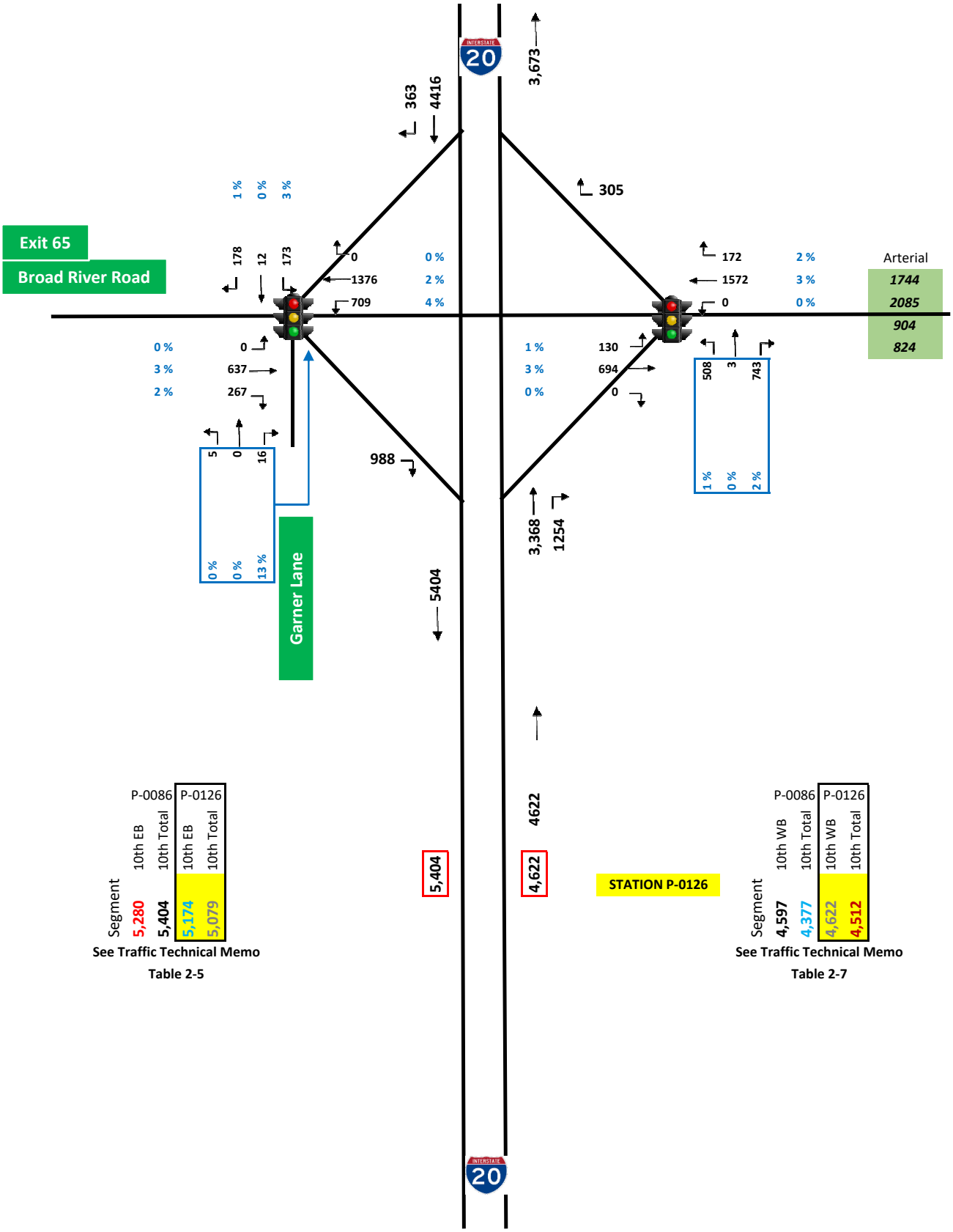

Segment	P-0086 10th EB	P-0086 10th Total	P-0126 10th EB	P-0126 10th Total
	5,280	5,404	5,174	5,079

See Traffic Technical Memo
Table 2-5

Segment	P-0086 10th WB	P-0086 10th Total	P-0126 10th WB	P-0126 10th Total
4,597	4,377		4,622	4,512

See Traffic Technical Memo
Table 2-7

AM MAINLINE VOLUME BALANCING

Carolina Crossroads
Existing Interchange Volumes

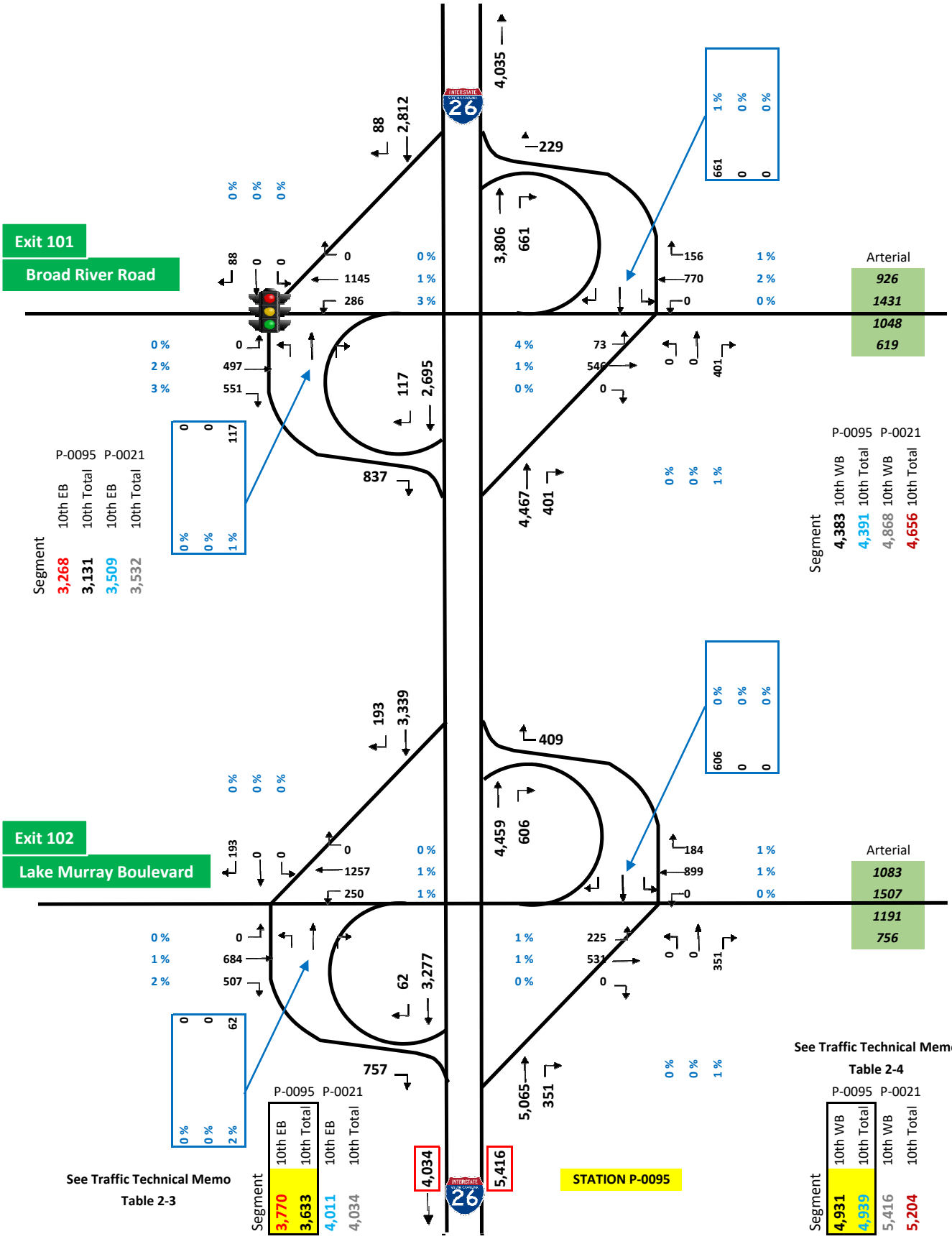

PM MAINLINE VOLUME BALANCING

Carolina Crossroads
Existing Interchange Volumes

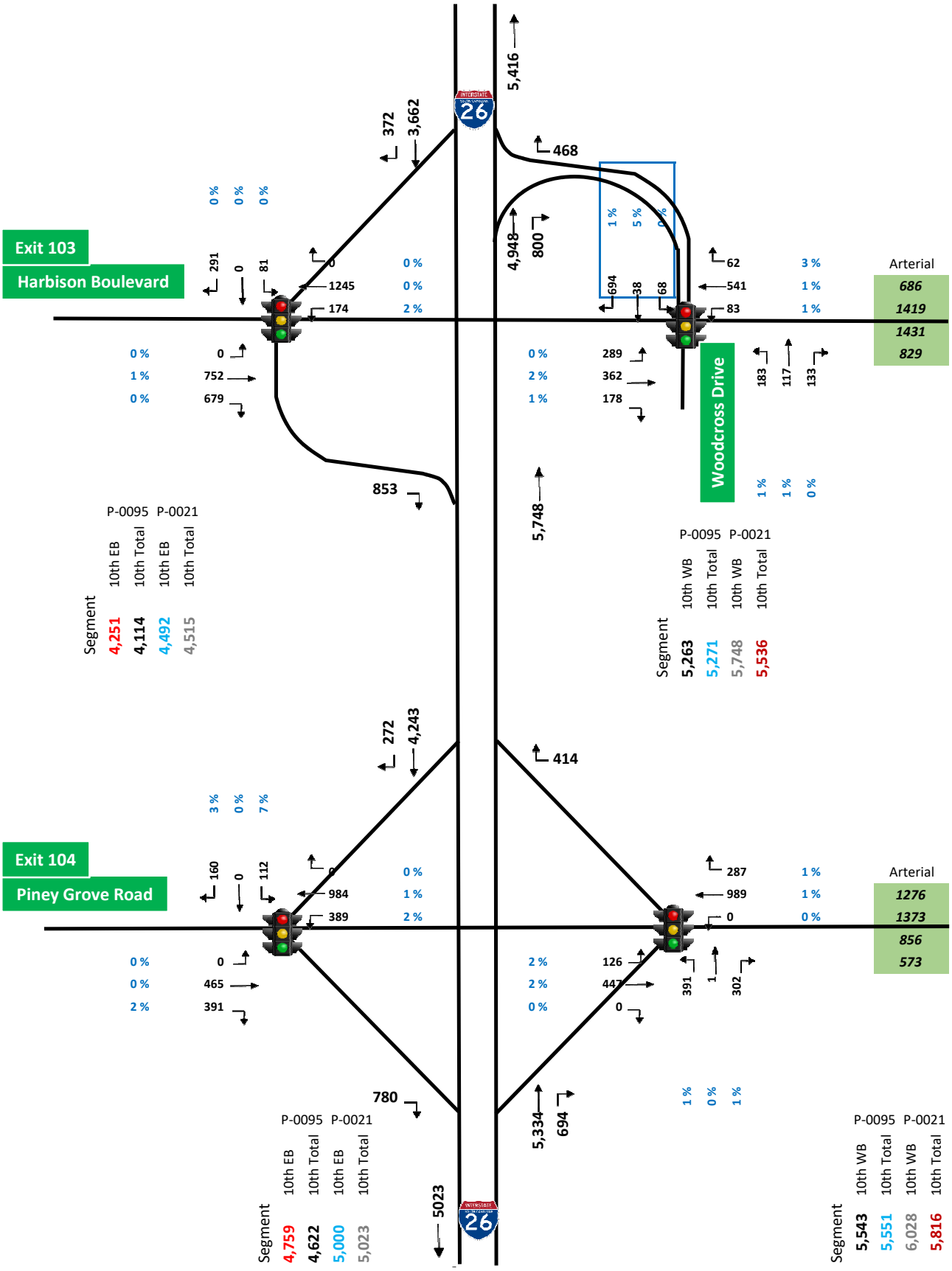

PM MAINLINE VOLUME BALANCING

Carolina Crossroads
Existing Interchange Volumes

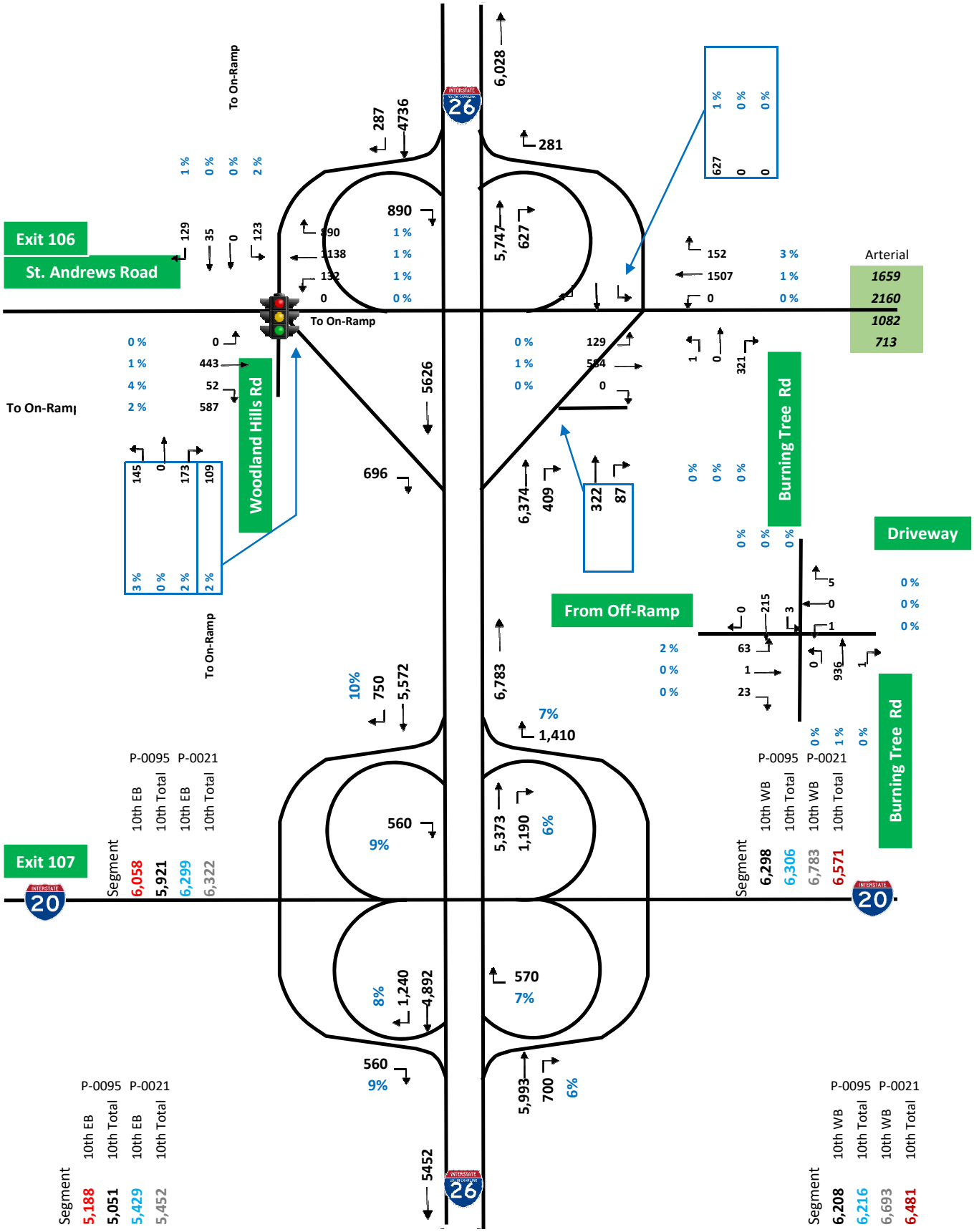

PM MAINLINE VOLUME BALANCING

Carolina Crossroads
Existing Interchange Volumes

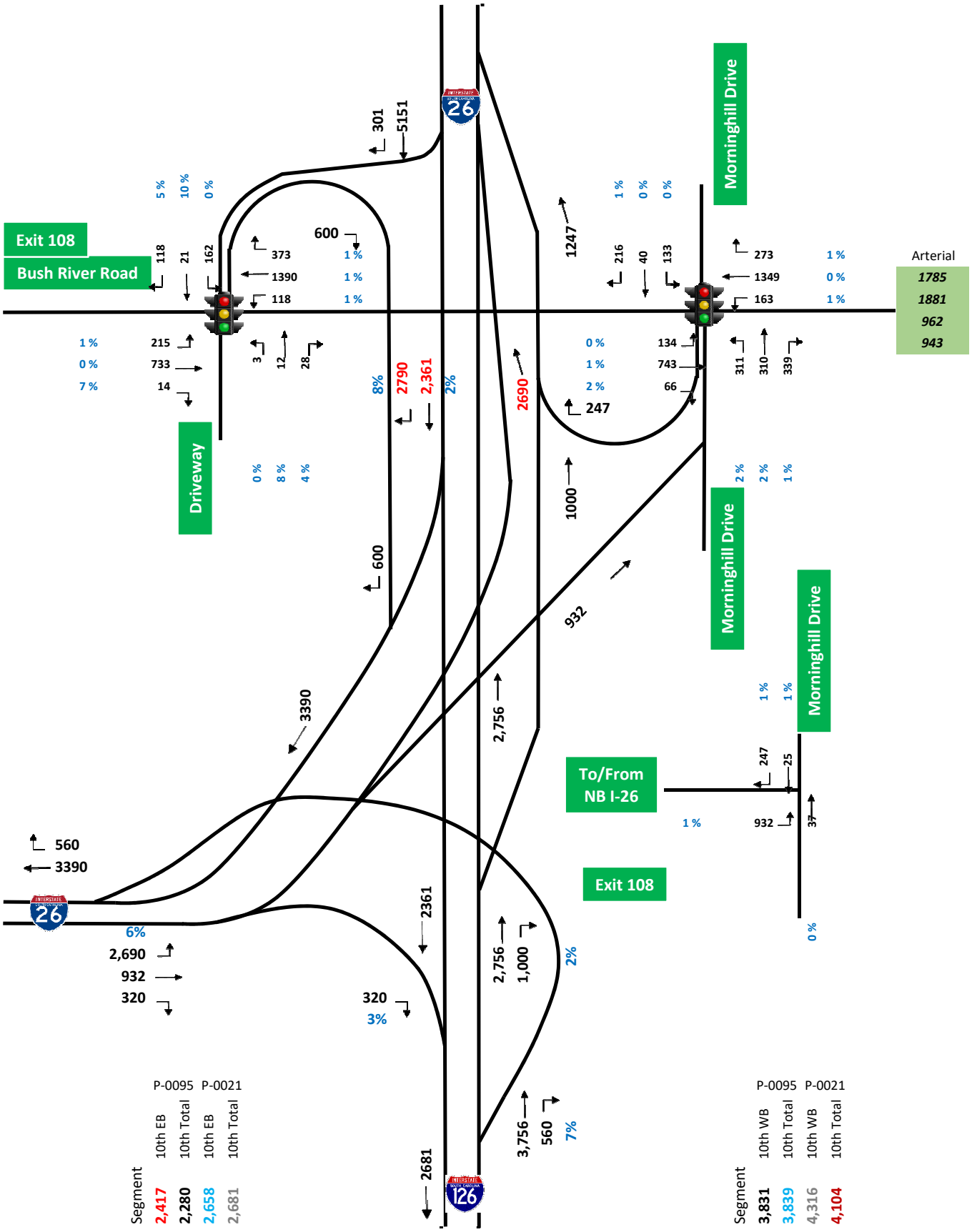

PM MAINLINE VOLUME BALANCING

Carolina Crossroads
Existing Interchange Volumes

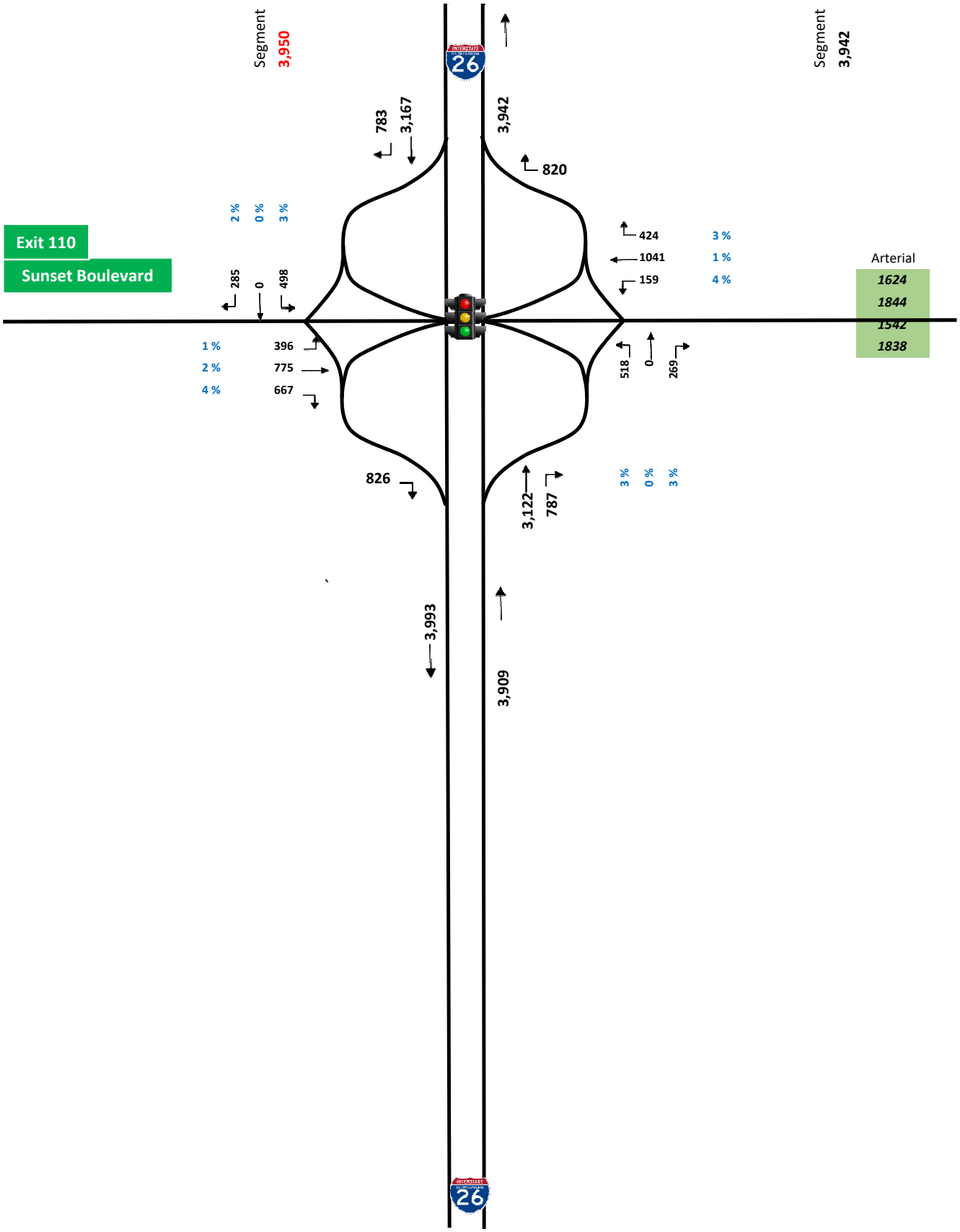

PM MAINLINE VOLUME BALANCING

Carolina Crossroads
Existing Interchange Volumes

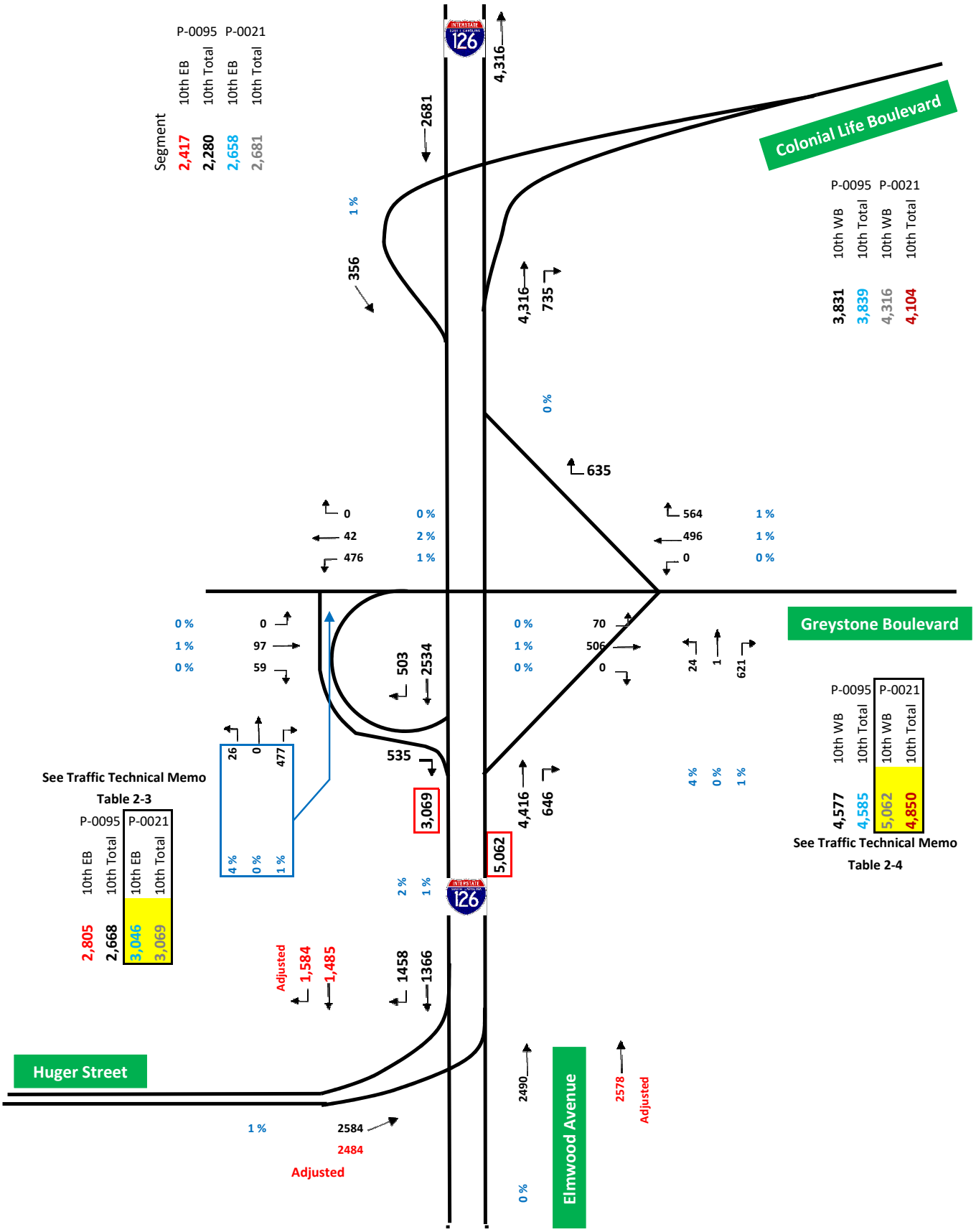

PM MAINLINE VOLUME BALANCING

Carolina Crossroads
Existing Interchange Volumes

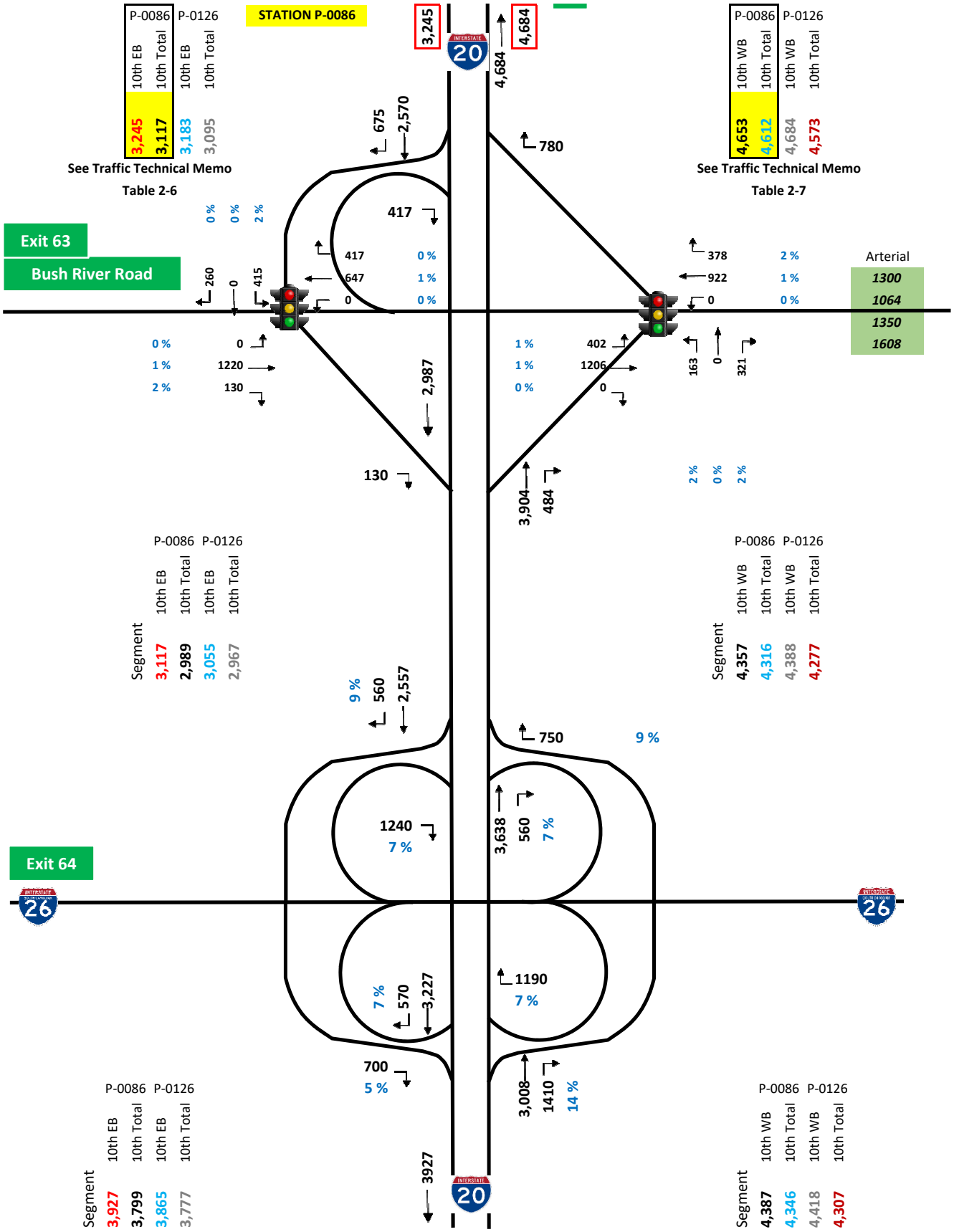

PM MAINLINE VOLUME BALANCING

Carolina Crossroads
Existing Interchange Volumes

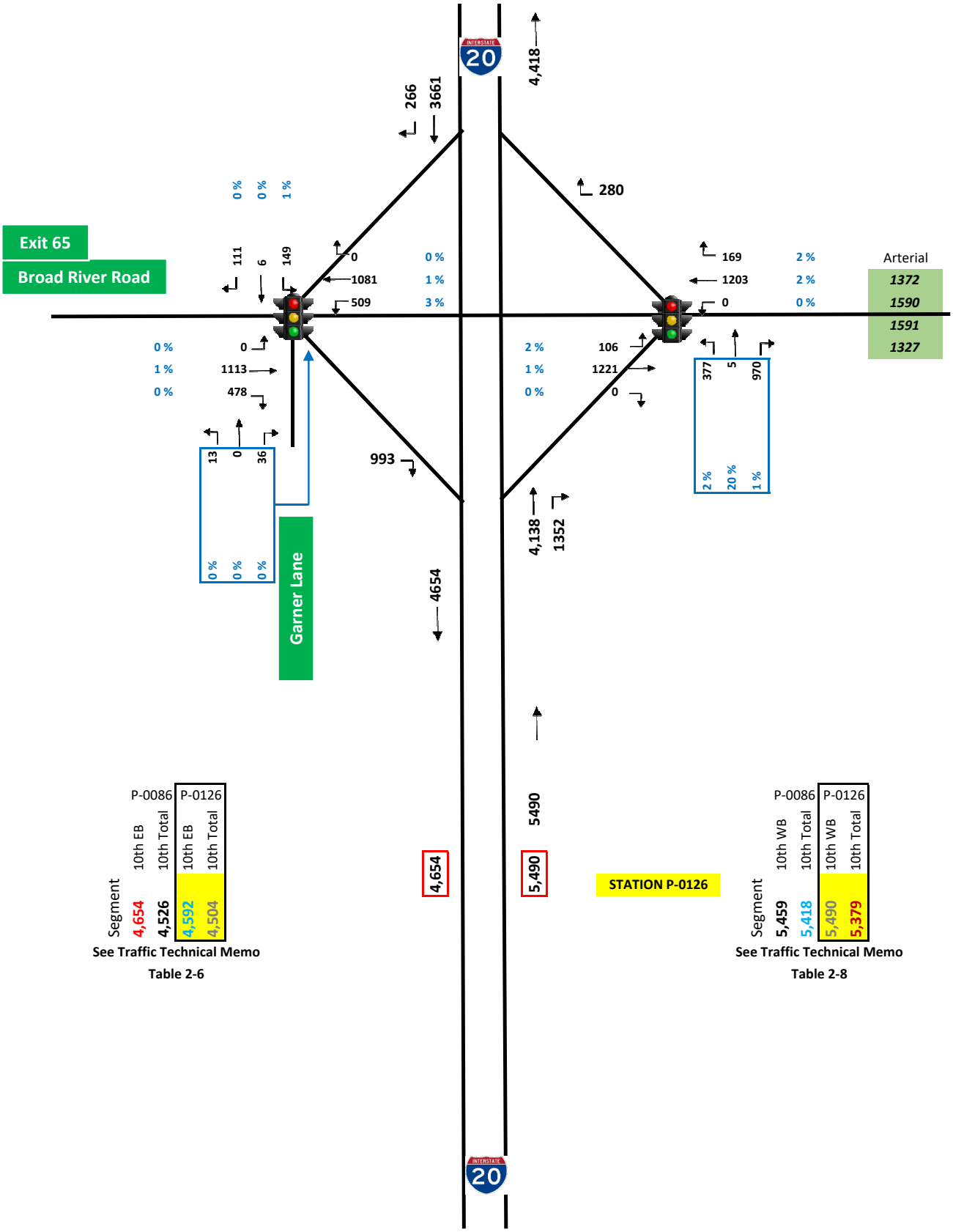

Segment	P-0086 10th EB	P-0086 10th Total	P-0126 10th EB	P-0126 10th Total
	4,654	4,526	4,592	4,504

See Traffic Technical Memo
Table 2-6

Segment	P-0086 10th WB	P-0086 10th Total	P-0126 10th WB	P-0126 10th Total
	5,459	5,418	5,490	5,379

See Traffic Technical Memo
Table 2-8

PM MAINLINE VOLUME BALANCING

TransModeler Network
2015 Existing Peak Hour
Volumes

Carolina Crossroads
Existing Interchange Volumes

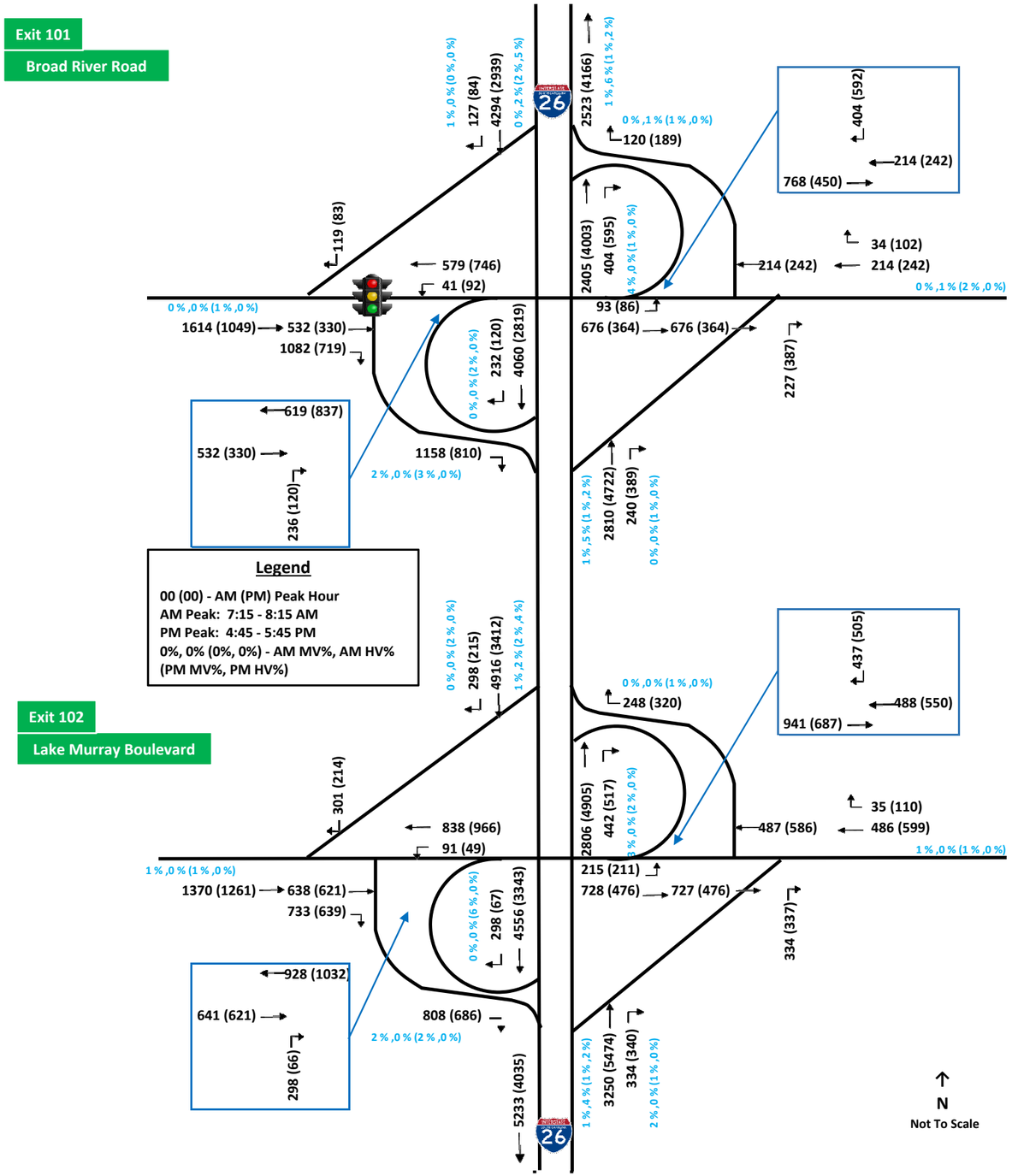

Carolina Crossroads
Existing Interchange Volumes

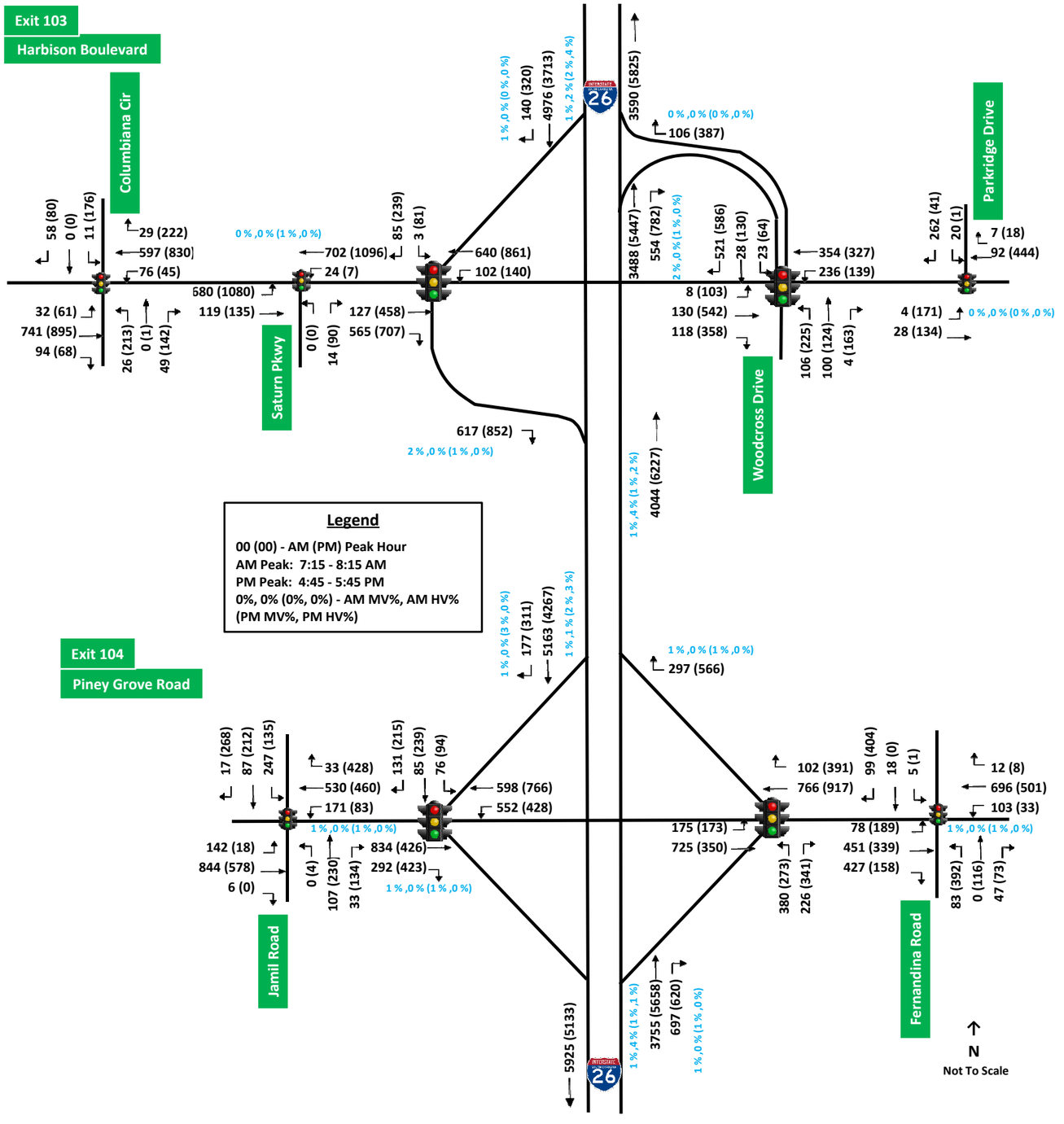

Carolina Crossroads
Existing Interchange Volumes

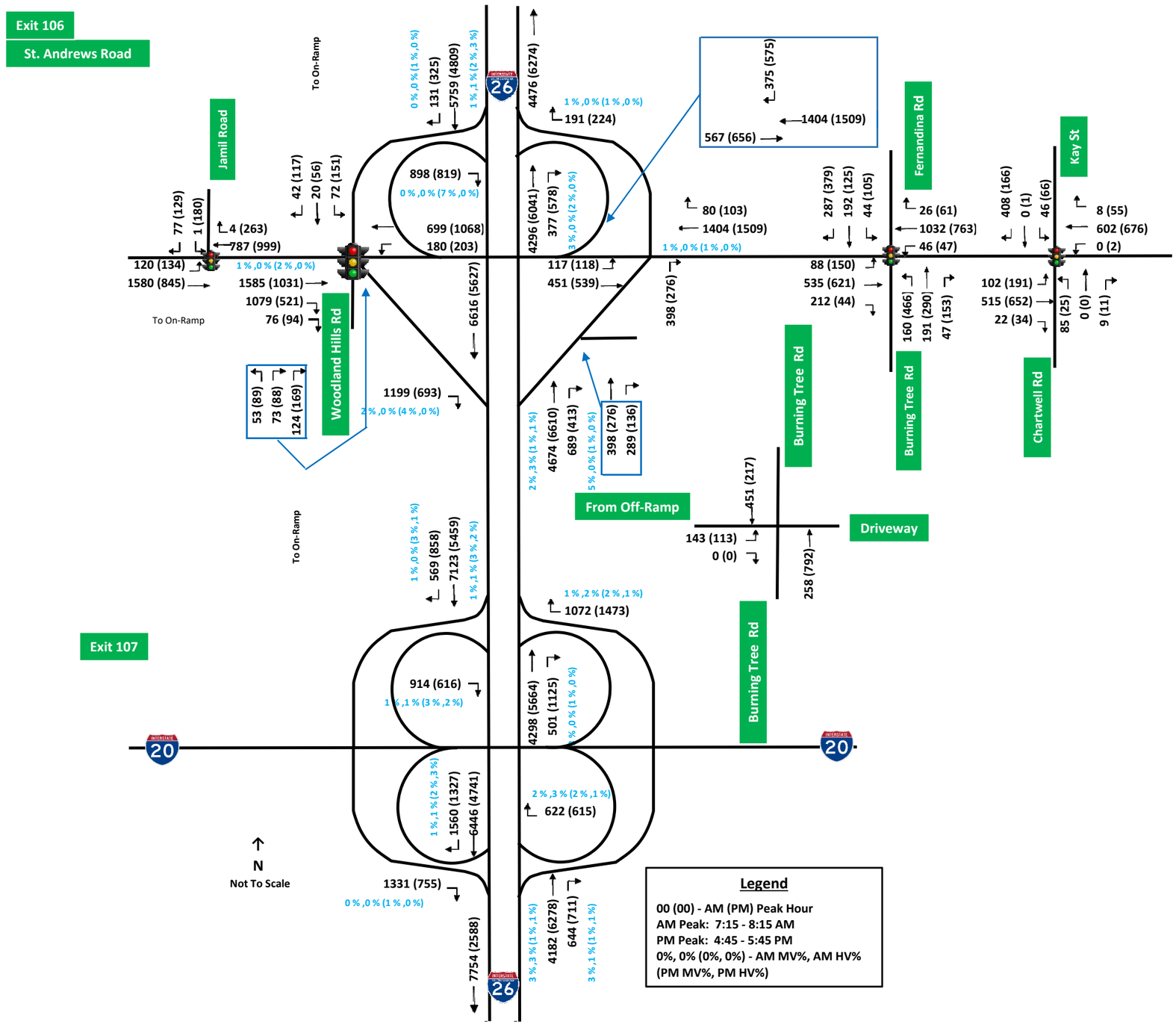

Carolina Crossroads
Existing Interchange Volumes

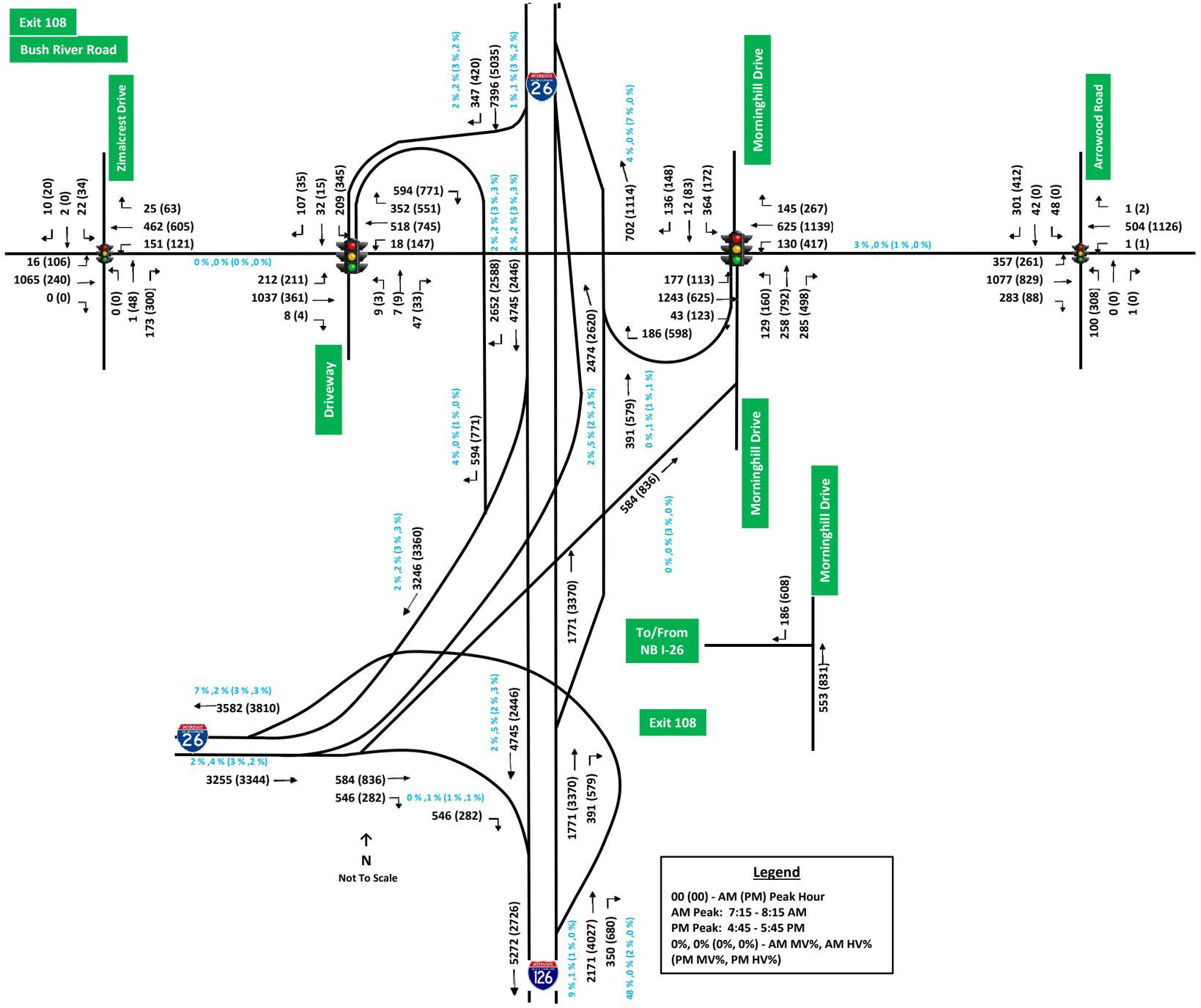

Legend

00 (00) - AM (PM) Peak Hour
AM Peak: 7:15 - 8:15 AM
PM Peak: 4:45 - 5:45 PM
0%, 0% (0%, 0%) - AM MV%, AM HV%
(PM MV%, PM HV%)

Carolina Crossroads
Existing Interchange Volumes

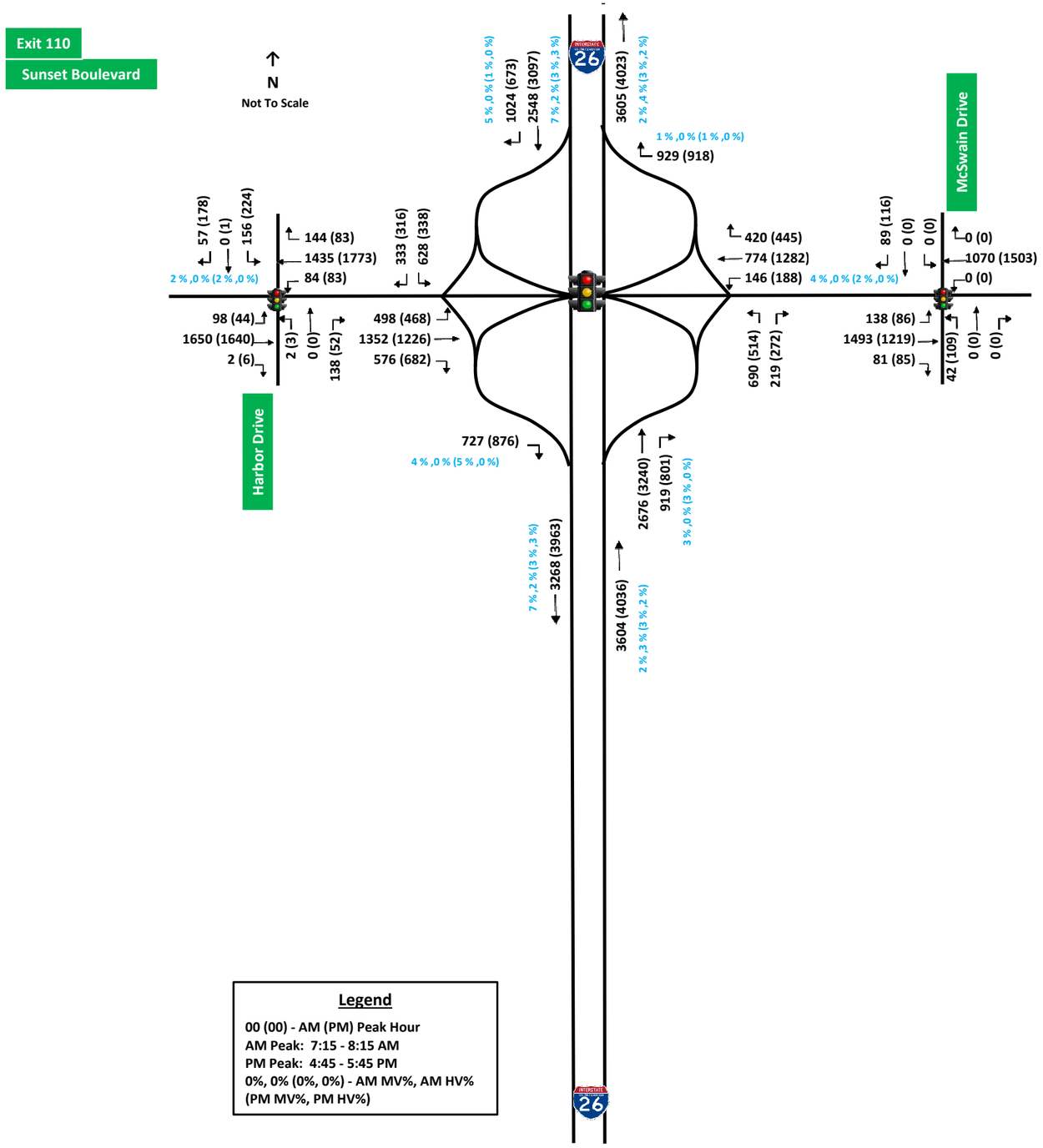

Legend

00 (00) - AM (PM) Peak Hour
AM Peak: 7:15 - 8:15 AM
PM Peak: 4:45 - 5:45 PM
0%, 0% (0%, 0%) - AM MV%, AM HV%
(PM MV%, PM HV%)

Carolina Crossroads
Existing Interchange Volumes

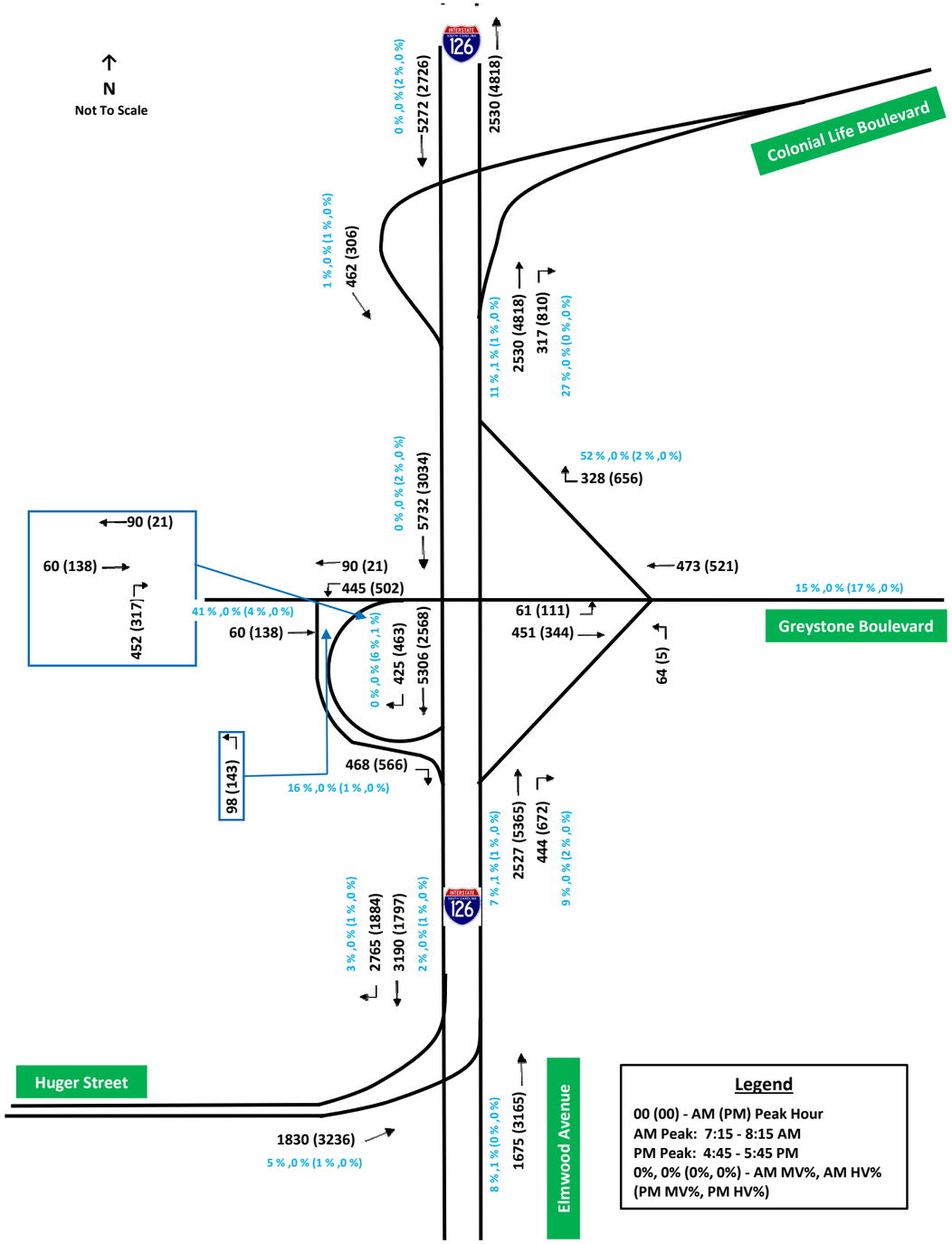

Carolina Crossroads
Existing Interchange Volumes

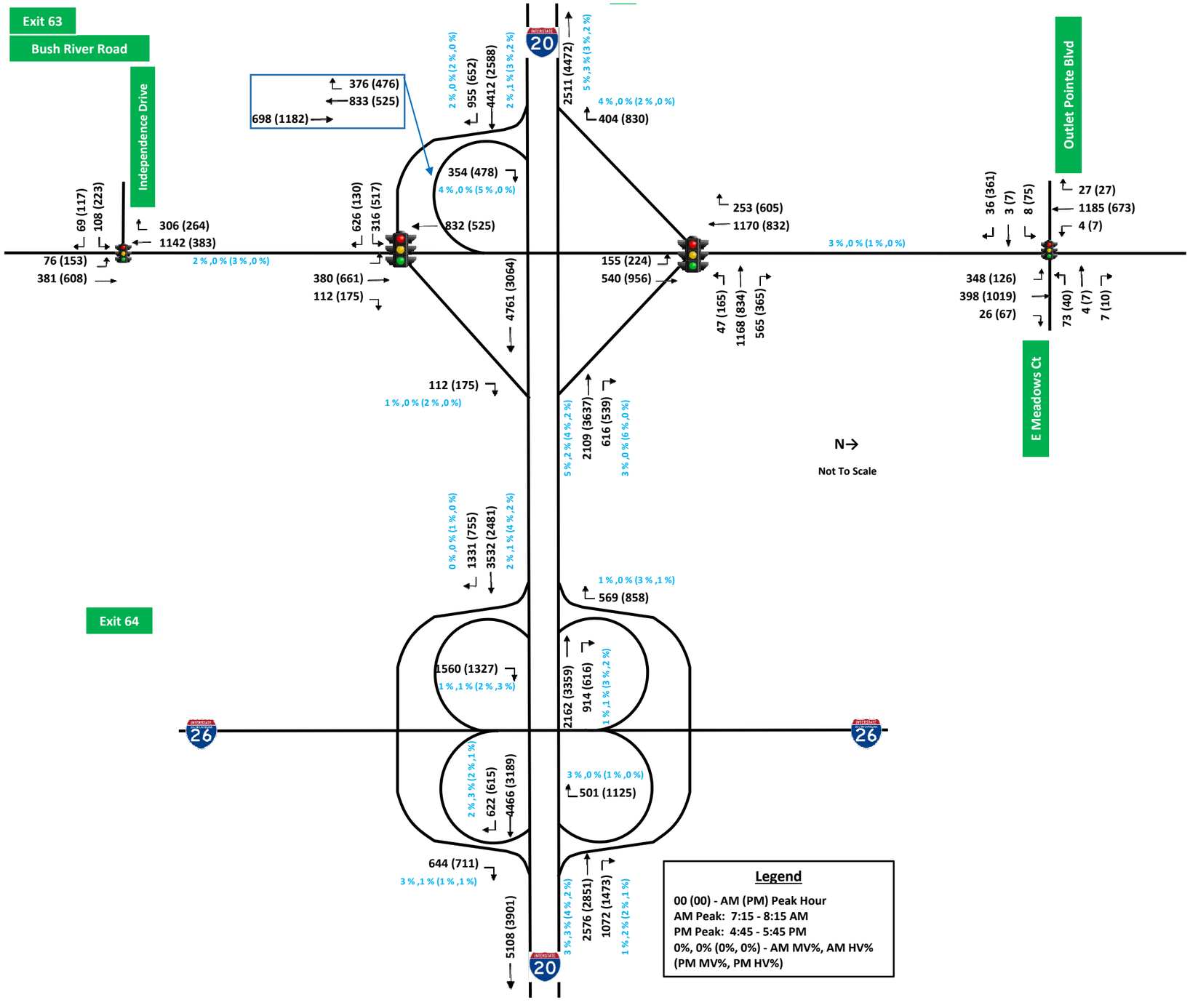

Carolina Crossroads
Existing Interchange Volumes

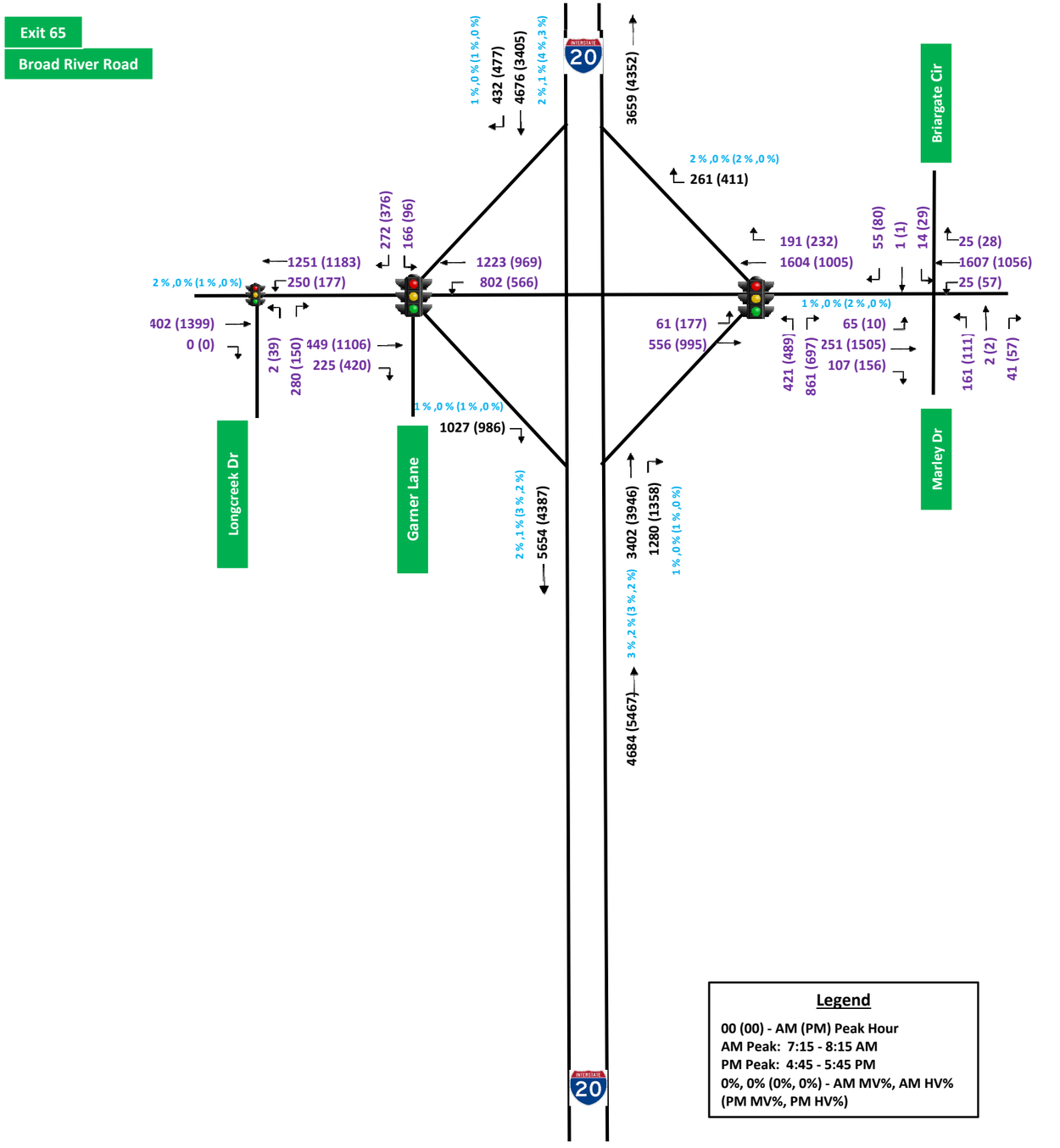

Additional turning movement counts were collected at the following locations:

1. Exit 102
   - Lake Murray Boulevard at College Street (signal) – Tuesday, November 22, 2016
   - Lake Murray Boulevard at Columbiana Drive (signal) Monday, November 21, 2016
   - Lake Murray Boulevard at Kinley/Parkridge Hospital (signal) – Tuesday, November 22, 2016
   - Lake Murray Boulevard at Parkridge Drive (signal) Monday, November 28, 2016
2. Exit 102 – 103
   - Columbiana Drive and Columbia Avenue/Gateway Academy (signal) Monday, November 28, 2016
   - Columbiana Drive and Crossbow Drive/Texas Roadhouse (signal) Wednesday, November 30, 2016
   - Columbiana Drive and Columbiana Circle (signal) Tuesday, November 29, 2016
3. Exit 103
   - Harbison Boulevard at Parkridge Drive (unsignalized) Wednesday, November 30, 2016
   - Woodcross Drive at Fernandina Road (unsignalized) Thursday, December 1, 2016
   - Harbison Boulevard at Saturn Parkway (signal) Friday, December 2, 2016
   - Harbison Boulevard at Columbiana Circle/Park Terrace Drive (signal) Monday, November 21, 2016
   - Harbison Boulevard at Columbiana Drive/Chik-Fil-A (signal) Tuesday, November 22, 2016
   - Harbison Boulevard at Rooms 2 Go/Pier One Driveways (signal) Monday, November 21, 2016
   - Harbison Boulevard at Bower Parkway (signal) Monday, November 21, 2016
   - Harbison Boulevard/Emory Lane at St. Andrews Road (signal) Monday, November 21, 2016
4. Exit 103 – 104
   - Bower Parkway at Park Terrace Drive (signal) Monday, November 21, 2016
   - Bower Parkway at Saturn Parkway (unsignalized) Tuesday, November 22, 2016
5. Exit 104
   - Piney Grove Road at Bower Parkway/Jamil Road (signal) Monday, November 21, 2016
   - Piney Grove Road at Foxfire Drive/Country Walk Apartments (unsignalized) Monday, November 21, 2016
   - Piney Grove Road at Fernandina Road (signal) Tuesday, November 22, 2016
   - Piney Grove Road at Piney Woods Road (roundabout) Tuesday, November 22, 2016
6. Exit 104 – Exit 106
   - Jamil Tram Road at Sidney Road (unsignalized) Tuesday, November 22, 2016
   - Jamil Road at Tram Road (unsignalized) Tuesday, November 22, 2016
   - Sidney Road at Tram Road (unsignalized) Tuesday, November 22, 2016
   - Fernandina Road and Beatty Road (unsignalized) Tuesday, November 22, 2016
   - Broad River Road and Beatty Road (unsignalized) Tuesday, November 22, 2016
   - Beatty Road and Evelyn Drive (unsignalized) Tuesday, November 22, 2016
   - Fernandina Road and Evelyn Drive (unsignalized) Monday, November 21, 2016
7. Exit 106
   - St. Andrews Road and Sidney Road (signal) Monday, November 28, 2016
   - St. Andrews Road and Ashland Road (signal) Monday, November 28, 2016

- St. Andrews Road and Kilbrannon Drive ((unsignalized) Monday, November 28, 2016
- St. Andrews Road and Jamil Road (signal) Monday, November 28, 2016
- Woodland Hills Road and Berry Hill Road (unsignalized) Monday, November 28, 2016
- St. Andrews Road at Kay Street/Chartwell Road (signal) Monday, November 28, 2016
- St. Andrews Road at Broad River Road (signal) Monday, November 28, 2016

8. Exit 106 – 108
    - Burning Tree Drive/Browning Road at Center Point Road (unsignalized) Tuesday, November 22, 2016
    - Browning Road at Zimalcrest Drive (unsignalized) Monday, November 28, 2016
9. Exit 108/Exit 63
    - Bush River Road at Ashland Road/Marydale Lane (signal) Tuesday, November 29, 2016
    - Bush River Road at Outlet Pointe Boulevard/E Meadow Court (signal) Monday, November 28, 2016
    - Bush River Road at Berryhill Road (signal) Wednesday, November 30, 2016
    - Bush River Road at Rockland Road (unsignalized) Tuesday, November 29, 2016
    - Bush River Road at Independence Avenue (signal) Wednesday, November 30, 2016
    - Bush River Road and Zimalcrest Drive (signal) Tuesday, November 29, 2016
    - Morninghill Drive and Burnette Drive (unsignalized) Thursday, December 1, 2016
    - Bush River Road at Arrowwood Road (signal) Tuesday, November 29, 2016
    - Bush River Road at Colonial Life Boulevard (signal) Tuesday, November 29, 2016
    - Bush River Road at Broad River Road (signal) Tuesday, November 29, 2016
10. Broad River Road (east of Exit 65)
    - Broad River Road at Arrowwood Road (signal) Tuesday, November 29, 2016
    - Broad River Road at Greystone Boulevard (signal) Tuesday, November 29, 2016
11. Exit 110
    - Sunset Boulevard at West Hospital Drive/Sunset Court (signal) Thursday, December 1, 2016
    - Sunset Boulevard at East Hospital Drive/Harbor Drive (signal) Thursday, December 1, 2016
    - Sunset Boulevard at McSwain Drive/Chris Drive (signal) Thursday, December 1, 2016
    - Sunset Boulevard at Whippoorwill Drive/Keckley Drive (signal) Thursday, December 1, 2016
12. Exit 65
    - Broad River Road at Marley Drive/Menlo Drive (signal) Thursday, December 1, 2016
    - Garner Lane at Eastbound on-ramp (unsignalized) Friday, December 2, 2016
    - Broad River Road at Longcreek Drive (signal) Thursday, December 1, 2016
    - Broad River Road at Dutch Square Boulevard (signal) Monday, November 28, 2016
    - Broad River Rd at Omarest Drive (signal) Friday, December 2, 2016

SOUTH CAROLINA DEPARTMENT OF TRANSPORTATION
DISTRICT 1
TRAFFIC ENGINEERING

County: Richland City: Columbia Date: 11/22/2016

Major Rt: Lake Murray Blvd * Not on State System Minor Rt: College St * Not on State System

Day of Week: Tuesday Weather: Clear Office: Short Counts JMS

Type of Control: Signal Speed Limit (major st) 40

Direction of Minor Street: N-S Intersection ADT - 26120 (Calc)

Number of Lanes (major st)* 2 Number of Lanes (minor st)* 1

* Each Direction

INTERSECTION VOLUME SUMMARY

	From N College St				From S College St				From E Lake Murray Blvd				From W Lake Murray Blvd				Total	Total
	LT	STR	RT	TOT	LT	STR	RT	TOT	LT	STR	RT	TOT	LT	STR	RT	TOT	Vol	Peds
7:00 - 7:15	8	0	2	10	6	0	16	22	4	151	8	163	3	245	5	253	448	0
7:15 - 7:30	18	3	3	24	13	1	25	39	7	159	11	177	7	272	4	283	523	1
7:30 - 7:45	7	2	4	13	14	0	23	37	6	181	9	196	0	270	8	278	524	0
7:45 - 8:00	21	0	2	23	11	1	13	25	17	191	17	225	4	240	11	255	528	2
8:00 - 8:15	24	1	4	29	8	1	17	26	9	164	13	186	3	224	11	238	479	2
8:15 - 8:30	16	1	3	20	9	0	12	21	11	161	12	184	3	214	6	223	448	0
8:30 - 8:45	13	2	5	20	11	0	13	24	15	176	14	205	4	222	9	235	484	0
8:45 - 9:00	16	1	3	20	17	3	15	35	29	173	4	206	9	234	16	259	520	0
9:00 - 9:15	13	1	2	16	14	1	16	31	14	181	10	205	5	233	20	258	510	0
9:15 - 9:30	11	0	9	20	12	0	21	33	8	152	8	168	3	196	6	205	426	0
9:30 - 9:45	15	1	8	24	14	4	27	45	14	157	6	177	4	200	8	212	458	0
9:45 - 10:00	14	2	3	19	15	3	25	43	12	180	11	203	4	247	16	267	532	2
10:00 - 10:15	17	4	3	24	12	4	10	26	17	169	9	195	10	200	12	222	467	0
10:15 - 10:30	15	1	6	22	12	1	17	30	13	143	4	160	8	193	15	216	428	0
10:30 - 10:45	9	2	5	16	17	3	17	37	13	205	16	234	8	270	9	287	574	0
10:45 - 11:00	12	4	4	20	16	4	14	34	23	197	18	238	6	218	15	239	531	0
11:00 - 11:15	14	1	4	19	11	2	13	26	21	152	14	187	2	176	12	190	422	0
11:15 - 11:30	14	1	6	21	17	4	19	40	9	187	10	206	4	235	15	254	521	0
11:30 - 11:45	22	3	4	29	14	5	8	27	15	159	11	185	1	172	11	184	425	0
11:45 - 12:00	16	1	4	21	15	5	18	38	29	234	13	276	1	261	19	281	616	0
12:00 - 12:15	6	5	7	18	25	1	21	47	22	256	18	296	4	266	19	289	650	0
12:15 - 12:30	24	3	5	32	19	3	19	41	22	224	10	256	2	272	18	292	621	0
12:30 - 12:45	10	1	6	17	21	3	24	48	15	244	12	271	7	261	14	282	618	0
12:45 - 13:00	13	2	2	17	17	2	18	37	23	195	11	229	7	234	14	255	538	0
13:00 - 13:15	22	3	2	27	17	3	19	39	27	195	12	234	5	230	20	255	555	0
13:15 - 13:30	12	4	3	19	16	5	9	30	18	141	13	172	12	161	18	191	412	0
13:30 - 13:45	9	7	3	19	12	4	9	25	16	201	15	232	4	238	14	256	532	0
13:45 - 14:00	15	6	2	23	24	2	15	41	23	239	19	281	4	254	11	269	614	0
14:00 - 14:15	18	4	4	26	16	2	14	32	16	245	24	285	6	233	10	249	592	0
14:15 - 14:30	20	8	2	30	22	4	23	49	9	232	13	254	8	216	20	244	577	0
14:30 - 14:45	12	2	5	19	23	5	23	51	18	160	15	193	6	162	9	177	440	0
14:45 - 15:00	23	1	7	31	25	2	26	53	11	224	16	251	13	219	16	248	583	0
15:00 - 15:15	18	4	6	28	30	7	17	54	36	253	17	306	8	241	17	266	654	0
15:15 - 15:30	17	3	2	22	21	4	15	40	17	235	23	275	13	254	19	286	623	0
15:30 - 15:45	12	2	2	16	19	2	12	33	19	233	21	273	9	232	16	257	579	0
15:45 - 16:00	15	5	2	22	18	3	19	40	23	237	21	281	6	219	17	242	585	1
16:00 - 16:15	17	5	7	29	26	1	10	37	34	239	8	281	6	238	14	258	605	0
16:15 - 16:30	18	8	6	32	24	1	14	39	22	216	18	256	4	248	15	267	594	1
16:30 - 16:45	32	6	4	42	24	0	16	40	30	240	18	288	5	272	21	298	668	0
16:45 - 17:00	15	4	6	25	18	1	14	33	27	267	15	309	13	268	22	303	670	0
17:00 - 17:15	20	10	6	36	27	6	28	61	29	248	14	291	11	265	16	292	680	0
17:15 - 17:30	12	9	1	22	20	1	9	30	30	168	5	203	0	228	11	239	494	0
17:30 - 17:45	14	8	0	22	14	4	10	28	27	100	3	130	6	153	6	165	345	0
17:45 - 18:00	21	7	8	36	23	5	24	52	38	230	15	283	4	216	21	241	612	0
18:00 - 18:15	16	1	6	23	11	6	17	34	23	240	10	273	6	199	10	215	545	0
18:15 - 18:30	21	1	2	24	14	4	14	32	25	246	13	284	5	205	8	218	558	0
18:30 - 18:45	21	5	7	33	11	3	18	32	34	281	14	329	5	199	12	216	610	0
18:45 - 19:00	20	3	2	25	12	0	14	26	24	265	16	305	12	178	5	195	551	0
TOTAL	768	158	199	1125	807	126	810	1743	944	9726	627	11297	280	10883	641	11804	25969	9
Trucks	5	0	2	7	1	0	3	4	0	50	3	53	0	60	1	61	125	0.5%
School Buses	0	0	5	5	1	0	6	7	2	14	0	16	2	16	0	18	46	0.2%

TOTAL AND PEAK HOUR VOLUME DIAGRAMS

Lake Murray Blvd AT College St Date: 11/22/2016

12.0 HOUR TOTAL VOLUME
FROM 7:00 TO 15:00

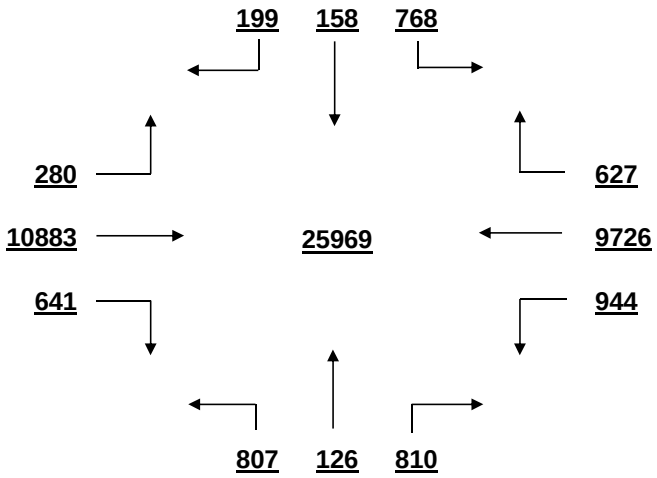

OVERALL PEAK HOUR VOLUME
FROM 16:15 TO 17:15

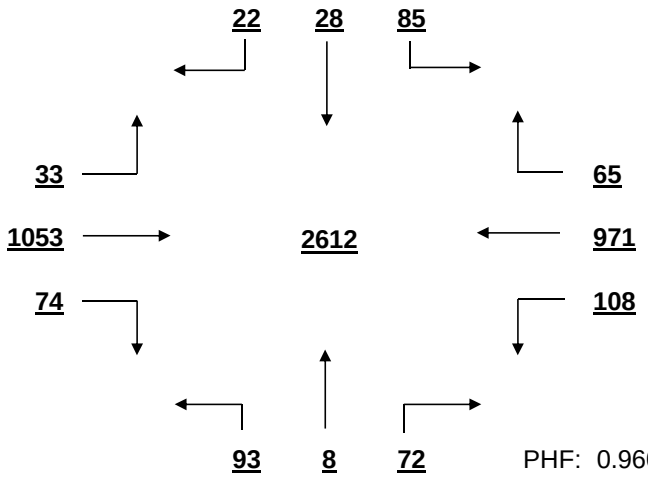

PHF: 0.960

AM PEAK HOUR VOLUME (0:00-10:45)
FROM 7:15 TO 8:15

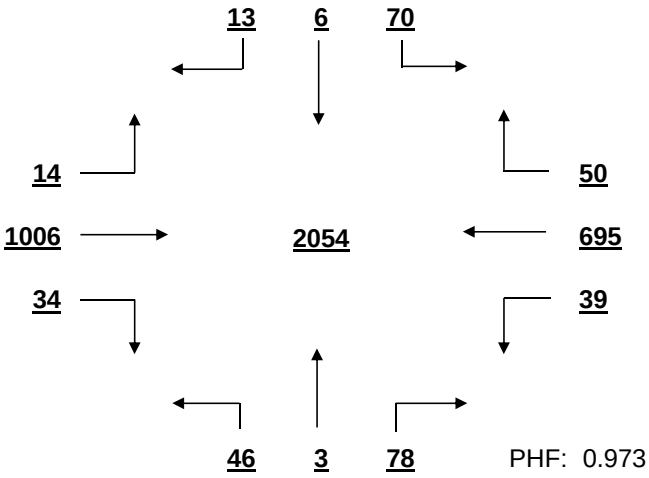

PHF: 0.973

PM PEAK HOUR VOLUME (14:15-23:45)
FROM 16:15 TO 17:15

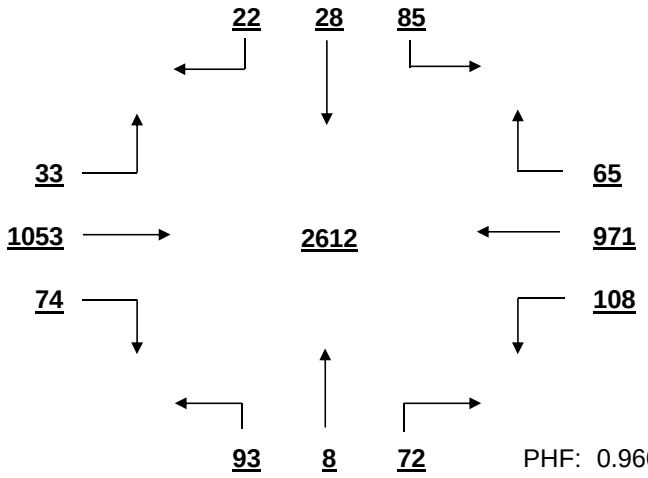

PHF: 0.960

MID-DAY PEAK HOUR VOLUME (11:00-14:00)
FROM 11:45 TO 12:45

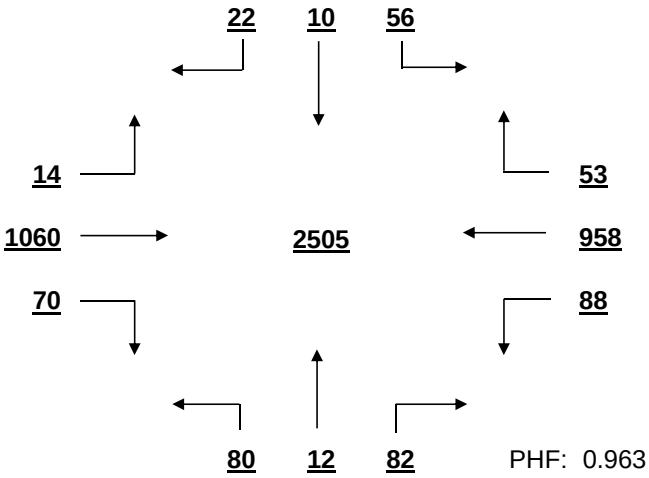

PHF: 0.963

OTHER HOUR VOLUME
FROM 7:00 TO 8:00

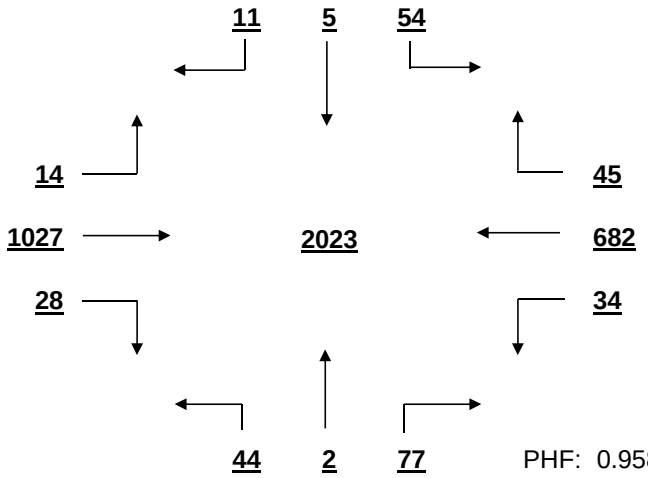

PHF: 0.958

SIGNAL WARRANT ANALYSIS

Lake Murray Blvd AT College St Date: 11/22/2016

Minor Street Volume, percent of total = 11.0%
Percent of Left Turns from Minor Street = 54.9%
Percent of Right Turns from Minor Street = 35.2%
Percent of Minor Street Right Turns to Remove from Warrant Analysis = 0%
WARRANT BASIS = **100%**

Warrant No. 1 - Vehicular Volume is met

Condition A - Minimum Vehicular Volume is not met

Average Major Street % of Warrant				Average Minor Street % of Warrant			
1925.1	/ 600	=	321%	145.3	/ 150	=	97%

Hourly percent of warrant

	7:00 - 8:00	8:00 - 9:00	9:00 - 10:00	10:00 - 11:00	11:00 - 12:00	12:00 - 13:00	13:00 - 14:00	14:00 - 15:00	15:00 - 16:00	16:00 - 17:00	17:00 - 18:00	18:00 - 19:00
Major St.	305%	289%	283%	299%	294%	362%	315%	317%	364%	377%	307%	339%
Minor St.	82%	71%	101%	85%	87%	115%	90%	123%	111%	99%	114%	83%

Condition B - Interruption to Continuous Traffic is met

Average Major Street % of Warrant				Average Minor Street % of Warrant			
1925.1	/ 900	=	214%	145.3	/ 75	=	194%

Hourly percent of warrant

	7:00 - 8:00	8:00 - 9:00	9:00 - 10:00	10:00 - 11:00	11:00 - 12:00	12:00 - 13:00	13:00 - 14:00	14:00 - 15:00	15:00 - 16:00	16:00 - 17:00	17:00 - 18:00	18:00 - 19:00
Major St.	203%	193%	188%	199%	196%	241%	210%	211%	243%	251%	205%	226%
Minor St.	164%	141%	203%	169%	175%	231%	180%	247%	223%	199%	228%	165%

80% Combination of Conditions A & B is met

Warrant No. 2 - Four Hour Vehicular Volume is met

Hourly percent of warrant

	7:00 - 8:00	8:00 - 9:00	9:00 - 10:00	10:00 - 11:00	11:00 - 12:00	12:00 - 13:00	13:00 - 14:00	14:00 - 15:00	15:00 - 16:00	16:00 - 17:00	17:00 - 18:00	18:00 - 19:00
Minor St.	154%	133%	190%	159%	164%	216%	169%	231%	209%	186%	214%	155%

Warrant No. 3 - Peak Hour is met

	Percent of warrant		Percent of warrant
Overall Peak Hour:	16:15 - 17:15	Higher Volume Side Street Peak Hour:	14:15 - 15:15
Minor St.	173%	Minor St.	207%

Warrant No. 4 - Pedestrian Volume. Pedestrian volume shown are minumum volumes assuming heavy major street traffic. If these volumes are met, warrant 4 requires further engineering analysis

Minimum 4 hour ped. volume crossing major street: 107

Minimum peak hour ped. volume crossing major street: 133

Number of pedestrians crossing major street

	7:00 - 8:00	8:00 - 9:00	9:00 - 10:00	10:00 - 11:00	11:00 - 12:00	12:00 - 13:00	13:00 - 14:00	14:00 - 15:00	15:00 - 16:00	16:00 - 17:00	17:00 - 18:00	18:00 - 19:00
Major St.	3	1	2	0	0	0	0	0	1	1	0	0

Warrant No. 7 - Crash Experience (Requires 3 criteria analysis by engineering)

Total Number: 0 From: 1/1/2005 to 1/1/2008
Accident Rate: 0.00 per million entering vehicles

Types of Accidents	No.	/	Avg.		No.	/	Avg.
Right Angle	0	/	0.0	Rear End	0	/	0.0
Lost Control	0	/	0.0	Side Swipe	0	/	0.0
Left Turn	0	/	0.0	Other	0	/	0.0

SOUTH CAROLINA DEPARTMENT OF TRANSPORTATION
DISTRICT 1
TRAFFIC ENGINEERING

County: Richland City: Columbia Date: 11/21/2016

Major Rt: Lake Murray Blvd * Not on State System Minor Rt: Columbiana Dr * Not on State System

Day of Week: Monday Weather: Clear Office: Short Counts JMS

Type of Control: Signal Speed Limit (major st) 40

Direction of Minor Street: N-S Intersection ADT - 37170 (Calc)

Number of Lanes (major st)* 2 Number of Lanes (minor st)* 1

* Each Direction

INTERSECTION VOLUME SUMMARY

	From N Columbiana Dr				From S Columbiana Dr				From E Lake Murray Blvd				From W Lake Murray Blvd				Total	Total
	LT	STR	RT	TOT	LT	STR	RT	TOT	LT	STR	RT	TOT	LT	STR	RT	TOT	Vol	Peds
7:00 - 7:15	17	15	10	42	8	11	30	49	22	163	5	190	14	233	27	274	555	0
7:15 - 7:30	20	40	18	78	22	14	35	71	41	155	9	205	23	263	37	323	677	0
7:30 - 7:45	29	54	23	106	14	10	35	59	53	176	11	240	21	210	36	267	672	0
7:45 - 8:00	19	50	25	94	12	12	22	46	33	181	11	225	24	253	17	294	659	0
8:00 - 8:15	24	46	28	98	11	8	24	43	28	179	9	216	24	218	42	284	641	0
8:15 - 8:30	15	50	29	94	20	9	31	60	52	208	16	276	26	255	35	316	746	0
8:30 - 8:45	11	27	29	67	17	12	33	62	28	177	15	220	18	194	29	241	590	0
8:45 - 9:00	20	32	25	77	14	7	18	39	25	201	12	238	27	227	31	285	639	0
9:00 - 9:15	10	43	31	84	22	20	16	58	31	181	19	231	21	226	35	282	655	0
9:15 - 9:30	10	38	17	65	18	10	36	64	36	154	16	206	18	192	35	245	580	0
9:30 - 9:45	9	32	31	72	22	16	23	61	26	194	14	234	20	221	49	290	657	0
9:45 - 10:00	6	52	25	83	15	17	24	56	42	183	15	240	24	233	42	299	678	0
10:00 - 10:15	19	32	38	89	23	25	25	73	44	182	19	245	23	182	43	248	655	0
10:15 - 10:30	15	28	22	65	23	17	28	68	23	162	10	195	25	207	55	287	615	0
10:30 - 10:45	9	34	22	65	43	28	21	92	38	186	17	241	20	224	61	305	703	2
10:45 - 11:00	15	36	28	79	33	24	23	80	30	197	16	243	20	174	48	242	644	0
11:00 - 11:15	13	34	27	74	41	26	37	104	43	205	19	267	19	225	63	307	752	0
11:15 - 11:30	5	37	15	57	38	27	17	82	61	187	22	270	19	199	64	282	691	0
11:30 - 11:45	7	19	22	48	34	15	17	66	25	131	9	165	15	141	38	194	473	0
11:45 - 12:00	10	43	35	88	39	33	36	108	52	226	20	298	26	222	68	316	810	0
12:00 - 12:15	17	46	41	104	46	38	40	124	47	224	20	291	41	205	70	316	835	0
12:15 - 12:30	14	51	43	108	43	34	47	124	49	209	25	283	33	230	67	330	845	0
12:30 - 12:45	8	35	54	97	34	32	33	99	39	168	13	220	21	194	40	255	671	0
12:45 - 13:00	17	41	23	81	56	49	55	160	40	234	29	303	26	247	77	350	894	0
13:00 - 13:15	20	36	41	97	65	50	63	178	35	210	19	264	39	204	61	304	843	0
13:15 - 13:30	17	33	32	82	49	35	58	142	31	183	17	231	29	182	44	255	710	3
13:30 - 13:45	13	27	16	56	45	26	34	105	25	170	9	204	44	120	42	206	571	0
13:45 - 14:00	12	37	30	79	50	46	43	139	24	193	14	231	29	218	48	295	744	0
14:00 - 14:15	13	13	29	55	38	28	34	100	33	192	12	237	19	172	42	233	625	0
14:15 - 14:30	10	33	29	72	54	45	38	137	54	205	24	283	33	225	58	316	808	0
14:30 - 14:45	13	31	29	73	50	45	60	155	41	254	16	311	32	215	82	329	868	0
14:45 - 15:00	10	39	25	74	48	39	55	142	52	218	17	287	24	214	60	298	801	0
15:00 - 15:15	18	29	22	69	39	33	54	126	39	108	6	153	25	174	29	228	576	1
15:15 - 15:30	13	33	21	67	55	46	48	149	38	154	15	207	28	207	37	272	695	0
15:30 - 15:45	9	33	24	66	68	46	47	161	38	178	19	235	30	203	53	286	748	0
15:45 - 16:00	11	41	30	82	57	31	53	141	47	209	31	287	34	204	44	282	792	2
16:00 - 16:15	11	39	34	84	45	42	45	132	56	245	33	334	40	219	54	313	863	0
16:15 - 16:30	9	39	39	87	59	45	42	146	50	202	26	278	23	169	33	225	736	0
16:30 - 16:45	12	45	27	84	52	46	58	156	66	296	43	405	46	239	59	344	989	0
16:45 - 17:00	10	41	35	86	48	55	50	153	66	303	41	410	40	223	46	309	958	2
17:00 - 17:15	9	33	23	65	34	33	43	110	52	252	29	333	26	251	32	309	817	0
17:15 - 17:30	13	58	28	99	44	49	68	161	66	246	27	339	44	262	48	354	953	0
17:30 - 17:45	13	53	25	91	42	35	48	125	62	247	46	355	66	267	47	380	951	0
17:45 - 18:00	18	37	32	87	53	53	72	178	71	233	24	328	52	197	40	289	882	0
18:00 - 18:15	18	34	20	72	53	36	45	134	56	227	29	312	16	179	44	239	757	0
18:15 - 18:30	16	43	26	85	57	50	42	149	57	257	26	340	26	232	68	326	900	0
18:30 - 18:45	20	34	38	92	56	35	50	141	56	206	15	277	22	191	45	258	768	0
18:45 - 19:00	10	25	16	51	30	25	30	85	29	127	6	162	16	111	29	156	454	0
TOTAL	657	1781	1332	3770	1839	1468	1886	5193	2052	9578	915	12545	1331	10053	2254	13638	35146	10
Trucks	1	3	4	8	4	3	6	13	1	55	2	58	4	49	6	59	138	0.4%
School Buses	1	7	2	10	3	4	7	14	7	11	2	20	1	16	8	25	69	0.2%

TOTAL AND PEAK HOUR VOLUME DIAGRAMS

Lake Murray Blvd AT Columbiana Dr Date: 11/21/2016

12.0 HOUR TOTAL VOLUME
FROM 7:00 TO 15:00

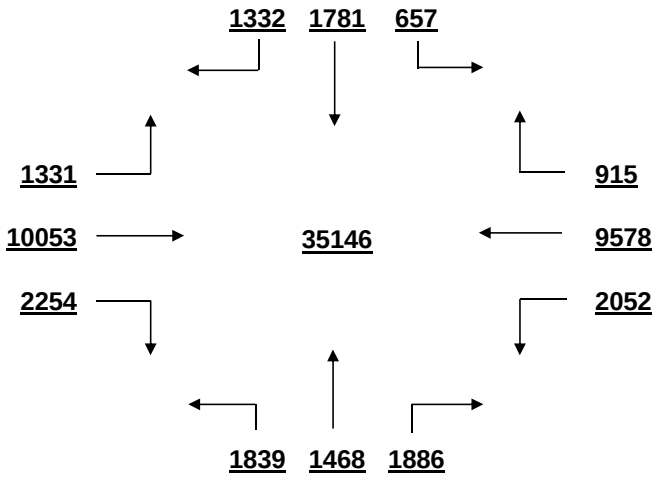

OVERALL PEAK HOUR VOLUME
FROM 16:30 TO 17:30

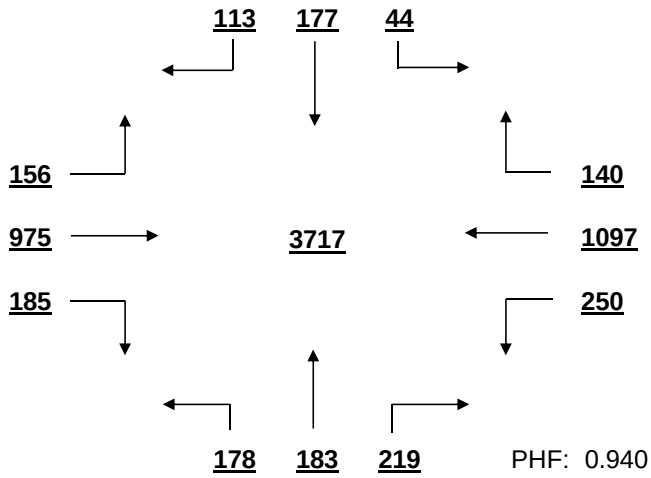

PHF: 0.940

AM PEAK HOUR VOLUME (0:00-10:45)
FROM 7:30 TO 8:30

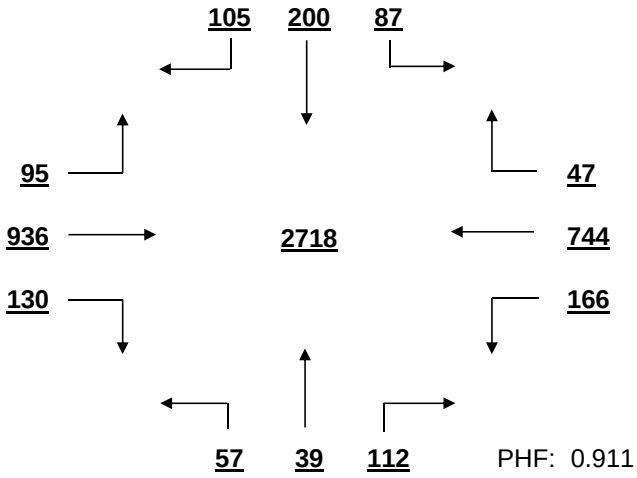

PHF: 0.911

PM PEAK HOUR VOLUME (14:15-23:45)
FROM 16:30 TO 17:30

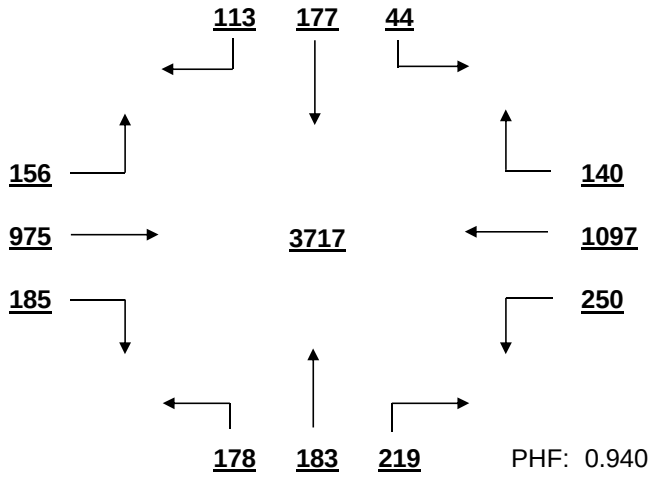

PHF: 0.940

MID-DAY PEAK HOUR VOLUME (11:00-14:00)
FROM 12:15 TO 13:15

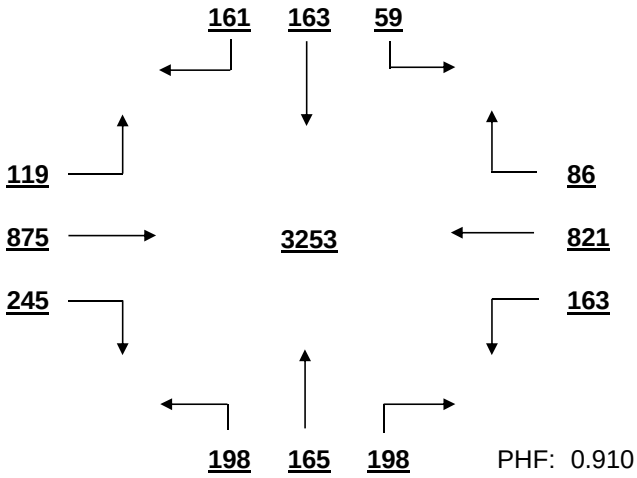

PHF: 0.910

OTHER HOUR VOLUME
FROM 7:00 TO 8:00

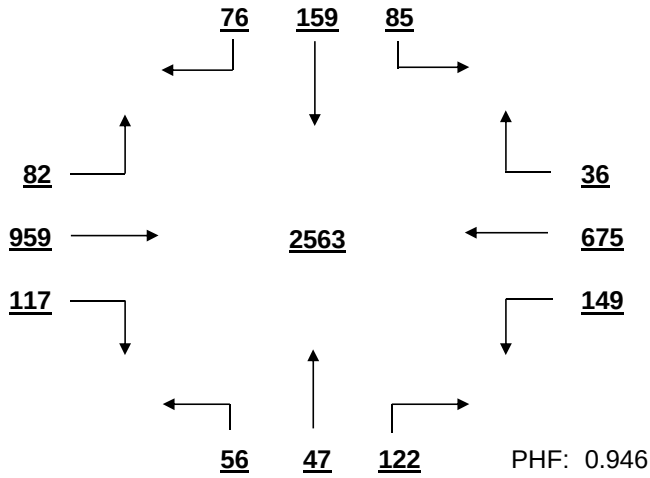

PHF: 0.946

SIGNAL WARRANT ANALYSIS

Lake Murray Blvd AT Columbiana Dr Date: 11/21/2016

Minor Street Volume, percent of total = 25.5%
Percent of Left Turns from Minor Street = 27.8%
Percent of Right Turns from Minor Street = 35.9%
Percent of Minor Street Right Turns to Remove from Warrant Analysis = 0%
WARRANT BASIS = **100%**

Warrant No. 1 - Vehicular Volume is met

Condition A - Minimum Vehicular Volume is met

Average Major Street % of Warrant				Average Minor Street % of Warrant			
2181.9	/	600 =	364%	432.8	/	150 =	289%

Hourly percent of warrant

	7:00 - 8:00	8:00 - 9:00	9:00 - 10:00	10:00 - 11:00	11:00 - 12:00	12:00 - 13:00	13:00 - 14:00	14:00 - 15:00	15:00 - 16:00	16:00 - 17:00	17:00 - 18:00	18:00 - 19:00
Major St.	336%	346%	338%	334%	350%	391%	332%	382%	325%	436%	448%	345%
Minor St.	213%	224%	203%	209%	240%	338%	376%	356%	385%	391%	383%	339%

Condition B - Interruption to Continuous Traffic is met

Average Major Street % of Warrant				Average Minor Street % of Warrant			
2181.9	/	900 =	242%	432.8	/	75 =	577%

Hourly percent of warrant

	7:00 - 8:00	8:00 - 9:00	9:00 - 10:00	10:00 - 11:00	11:00 - 12:00	12:00 - 13:00	13:00 - 14:00	14:00 - 15:00	15:00 - 16:00	16:00 - 17:00	17:00 - 18:00	18:00 - 19:00
Major St.	224%	231%	225%	223%	233%	261%	221%	255%	217%	291%	299%	230%
Minor St.	427%	448%	405%	417%	480%	676%	752%	712%	769%	783%	765%	679%

80% Combination of Conditions A & B is met

Warrant No. 2 - Four Hour Vehicular Volume is met

Hourly percent of warrant

	7:00 - 8:00	8:00 - 9:00	9:00 - 10:00	10:00 - 11:00	11:00 - 12:00	12:00 - 13:00	13:00 - 14:00	14:00 - 15:00	15:00 - 16:00	16:00 - 17:00	17:00 - 18:00	18:00 - 19:00
Minor St.	400%	420%	380%	391%	450%	634%	705%	668%	721%	734%	718%	636%

Warrant No. 3 - Peak Hour is met

	Percent of warrant		Percent of warrant
Overall Peak Hour:	16:30 - 17:30	Higher Volume Side Street Peak Hour:	17:45 - 18:45
Minor St.	580%	Minor St.	602%

Warrant No. 4 - Pedestrian Volume. Pedestrian volume shown are minumum volumes assuming heavy major street traffic. If these volumes are met, warrant 4 requires further engineering analysis

Minimum 4 hour ped. volume crossing major street: 107

Minimum peak hour ped. volume crossing major street: 133

Number of pedestrians crossing major street

	7:00 - 8:00	8:00 - 9:00	9:00 - 10:00	10:00 - 11:00	11:00 - 12:00	12:00 - 13:00	13:00 - 14:00	14:00 - 15:00	15:00 - 16:00	16:00 - 17:00	17:00 - 18:00	18:00 - 19:00
Major St.	0	0	0	2	0	0	2	0	1	1	0	0

Warrant No. 7 - Crash Experience (Requires 3 criteria analysis by engineering)

Total Number: 0 From: 1/1/2005 to 1/1/2008

Accident Rate: 0.00 per million entering vehicles

Types of Accidents	No.	/	Avg.		No.	/	Avg.
Right Angle	0	/	0.0	Rear End	0	/	0.0
Lost Control	0	/	0.0	Side Swipe	0	/	0.0
Left Turn	0	/	0.0	Other	0	/	0.0

SOUTH CAROLINA DEPARTMENT OF TRANSPORTATION
DISTRICT 1
TRAFFIC ENGINEERING

County: Richland City: Columbia Date: 11/22/2016

Major Rt: Lake Murray Blvd * Not on State System Minor Rt: Kinley-Parkridge Dr * Not on State System

Day of Week: Tuesday Weather: Clear Office: Short Counts JMS

Type of Control: Signal Speed Limit (major st) 45

Direction of Minor Street: N-S Intersection ADT - 23250 (Calc)

Number of Lanes (major st)* 2 Number of Lanes (minor st)* 1

* Each Direction

INTERSECTION VOLUME SUMMARY

	From N Kinley-Parkridge D				From S Kinley-Parkridge D				From E Lake Murray Blvd				From W Lake Murray Blvd				Total	Total
	LT	STR	RT	TOT	LT	STR	RT	TOT	LT	STR	RT	TOT	LT	STR	RT	TOT	Vol	Peds
7:00 - 7:15	10	3	151	164	5	1	1	7	1	44	8	53	55	59	21	135	359	0
7:15 - 7:30	31	9	133	173	7	0	2	9	3	48	9	60	83	87	24	194	436	0
7:30 - 7:45	49	10	135	194	5	1	1	7	5	49	6	60	96	138	48	282	543	0
7:45 - 8:00	58	8	113	179	14	3	5	22	4	40	10	54	93	150	46	289	544	0
8:00 - 8:15	62	7	93	162	6	1	5	12	0	45	9	54	57	116	54	227	455	1
8:15 - 8:30	29	13	98	140	13	0	3	16	5	44	13	62	59	85	38	182	400	0
8:30 - 8:45	22	7	84	113	14	5	5	24	3	45	8	56	85	66	38	189	382	0
8:45 - 9:00	35	5	77	117	22	1	3	26	2	51	12	65	72	65	31	168	376	1
9:00 - 9:15	29	5	88	122	21	1	1	23	3	59	9	71	72	63	18	153	369	0
9:15 - 9:30	23	2	106	131	21	6	3	30	1	50	16	67	73	49	34	156	384	0
9:30 - 9:45	13	3	88	104	17	4	2	23	1	42	14	57	79	40	37	156	340	0
9:45 - 10:00	28	7	81	116	22	6	4	32	2	47	14	63	82	52	22	156	367	0
10:00 - 10:15	15	8	97	120	23	2	8	33	2	42	17	61	55	50	26	131	345	0
10:15 - 10:30	23	13	78	114	31	4	8	43	1	48	20	69	62	40	31	133	359	0
10:30 - 10:45	13	5	54	72	18	3	2	23	1	48	9	58	50	46	20	116	269	0
10:45 - 11:00	24	10	88	122	24	7	5	36	0	48	19	67	62	60	29	151	376	0
11:00 - 11:15	20	7	104	131	31	6	9	46	0	43	19	62	76	65	17	158	397	0
11:15 - 11:30	18	5	83	106	25	2	3	30	5	54	21	80	62	61	15	138	354	0
11:30 - 11:45	23	7	74	104	38	2	3	43	2	44	22	68	75	34	11	120	335	0
11:45 - 12:00	13	3	44	60	9	2	0	11	2	26	5	33	29	25	15	69	173	0
12:00 - 12:15	27	3	104	134	30	11	4	45	0	96	28	124	94	59	14	167	470	0
12:15 - 12:30	29	11	77	117	33	10	2	45	0	53	21	74	98	67	20	185	421	1
12:30 - 12:45	10	2	51	63	2	0	1	3	0	17	7	24	56	21	6	83	173	1
12:45 - 13:00	16	4	74	94	22	2	3	27	1	40	22	63	91	61	23	175	359	0
13:00 - 13:15	23	2	96	121	23	7	2	32	1	84	34	119	96	71	33	200	472	0
13:15 - 13:30	15	4	108	127	35	11	4	50	1	66	29	96	96	59	28	183	456	0
13:30 - 13:45	16	8	89	113	21	3	4	28	3	50	22	75	98	62	34	194	410	0
13:45 - 14:00	14	1	96	111	26	1	4	31	4	61	27	92	108	58	26	192	426	0
14:00 - 14:15	28	2	83	113	27	2	3	32	0	52	28	80	109	56	19	184	409	0
14:15 - 14:30	13	5	83	101	20	2	2	24	1	44	14	59	52	47	18	117	301	0
14:30 - 14:45	15	5	93	113	26	4	4	34	5	53	23	81	109	61	29	199	427	1
14:45 - 15:00	21	12	125	158	46	6	7	59	2	66	39	107	146	54	22	222	546	0
15:00 - 15:15	21	4	111	136	43	7	1	51	7	75	22	104	125	61	30	216	507	1
15:15 - 15:30	12	3	101	116	34	6	2	42	0	81	32	113	105	68	15	188	459	0
15:30 - 15:45	18	6	85	109	51	6	9	66	1	77	25	103	118	68	22	208	486	0
15:45 - 16:00	16	9	90	115	37	6	6	49	3	78	37	118	110	65	29	204	486	0
16:00 - 16:15	23	6	106	135	42	7	9	58	2	90	38	130	118	68	19	205	528	0
16:15 - 16:30	22	2	80	104	29	8	9	46	0	91	30	121	126	76	10	212	483	1
16:30 - 16:45	27	1	95	123	63	15	7	85	0	108	50	158	127	53	11	191	557	0
16:45 - 17:00	16	4	127	147	58	11	2	71	1	128	48	177	146	53	14	213	608	0
17:00 - 17:15	22	2	108	132	48	16	6	70	1	129	62	192	151	72	6	229	623	0
17:15 - 17:30	22	0	83	105	28	9	2	39	0	107	59	166	143	73	11	227	537	0
17:30 - 17:45	31	1	118	150	42	5	3	50	0	79	21	100	132	54	6	192	492	0
17:45 - 18:00	10	0	87	97	26	0	1	27	0	73	35	108	147	78	5	230	462	0
18:00 - 18:15	13	1	88	102	18	3	2	23	1	56	24	81	122	115	4	241	447	3
18:15 - 18:30	18	1	98	117	12	2	0	14	10	48	9	67	96	121	6	223	421	0
18:30 - 18:45	17	4	89	110	14	0	2	16	0	81	45	126	152	127	11	290	542	0
18:45 - 19:00	10	1	57	68	5	4	2	11	0	64	13	77	100	86	9	195	351	0
TOTAL	1063	241	4471	5775	1227	221	176	1624	87	2964	1104	4155	4548	3265	1055	8868	20422	10
Trucks	2	1	8	11	1	1	0	2	0	9	2	11	17	14	2	33	57	0.3%
School Buses	1	0	13	14	2	1	0	3	0	6	1	7	16	7	0	23	47	0.2%

TOTAL AND PEAK HOUR VOLUME DIAGRAMS

Lake Murray Blvd AT Kinley-Parkridge Dr Date: 11/22/2016

12.0 HOUR TOTAL VOLUME
FROM 7:00 TO 15:00

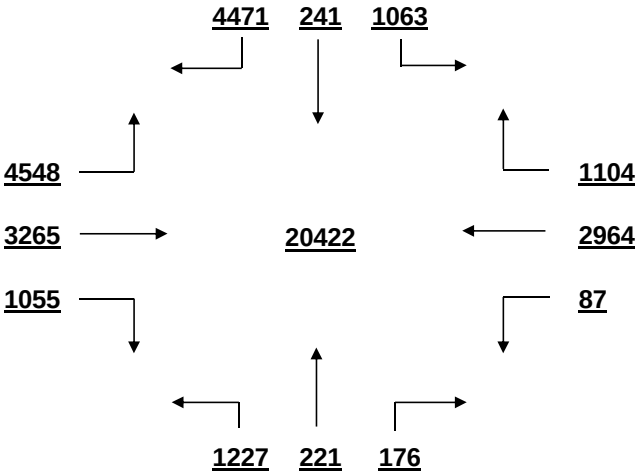

OVERALL PEAK HOUR VOLUME
FROM 16:30 TO 17:30

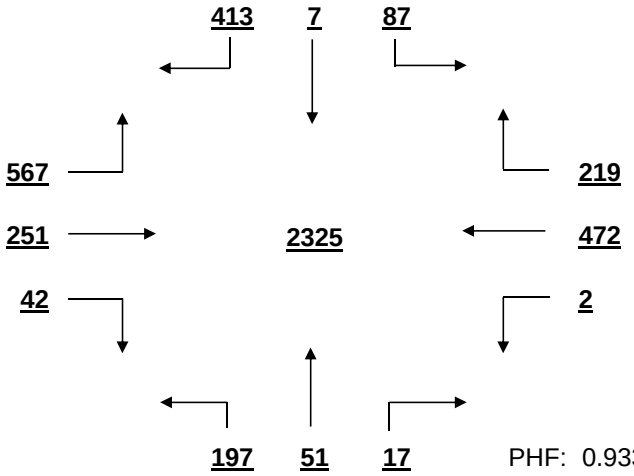

PHF: 0.933

AM PEAK HOUR VOLUME (0:00-10:45)
FROM 7:15 TO 8:15

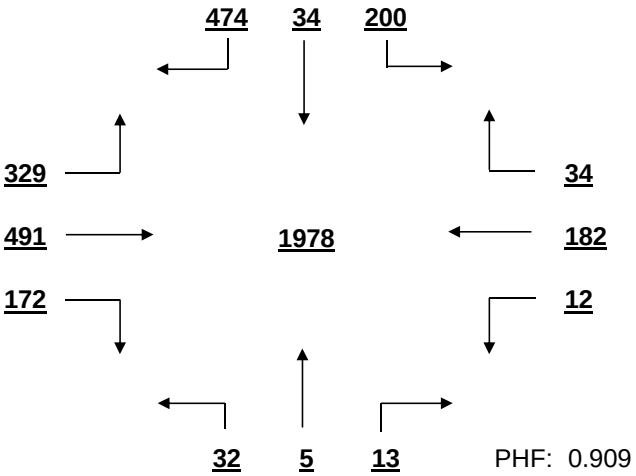

PHF: 0.909

PM PEAK HOUR VOLUME (14:15-23:45)
FROM 16:30 TO 17:30

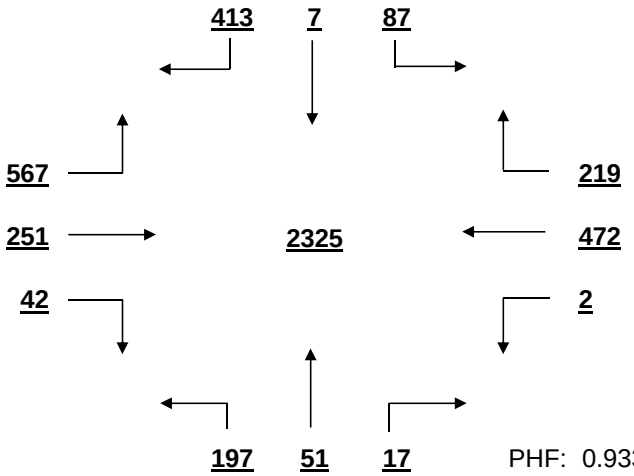

PHF: 0.933

MID-DAY PEAK HOUR VOLUME (11:00-14:00)
FROM 13:00 TO 14:00

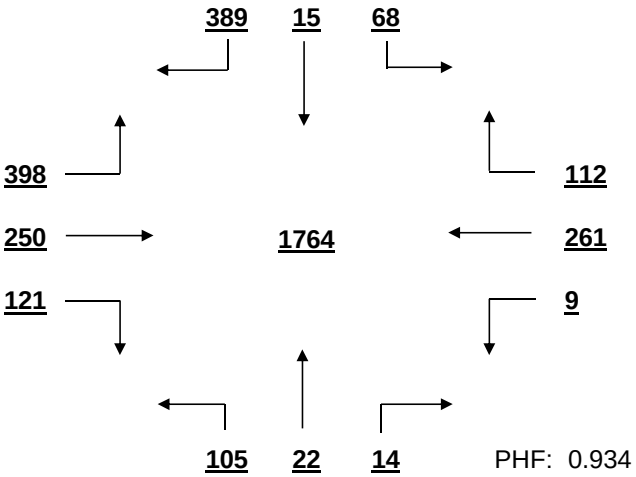

PHF: 0.934

OTHER HOUR VOLUME
FROM 7:00 TO 8:00

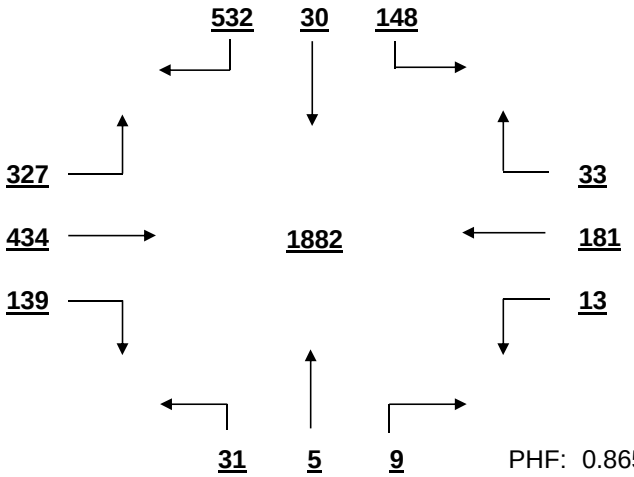

PHF: 0.865

SIGNAL WARRANT ANALYSIS

Lake Murray Blvd AT Kinley-Parkridge Dr Date: 11/22/2016

Minor Street Volume, percent of total = 36.2%
Percent of Left Turns from Minor Street = 31.0%
Percent of Right Turns from Minor Street = 62.8%
Percent of Minor Street Right Turns to Remove from Warrant Analysis = 0%
WARRANT BASIS = **70%**

Warrant No. 1 - Vehicular Volume is met

Condition A - Minimum Vehicular Volume is met

Average Major Street % of Warrant	Average Minor Street % of Warrant
1085.3 / 420 = 258%	481.3 / 105 = 458%

Hourly percent of warrant

	7:00 - 8:00	8:00 - 9:00	9:00 - 10:00	10:00 - 11:00	11:00 - 12:00	12:00 - 13:00	13:00 - 14:00	14:00 - 15:00	15:00 - 16:00	16:00 - 17:00	17:00 - 18:00	18:00 - 19:00
Major St.	268%	239%	209%	187%	173%	213%	274%	250%	299%	335%	344%	310%
Minor St.	676%	507%	450%	408%	382%	389%	450%	462%	453%	485%	461%	378%

Condition B - Interruption to Continuous Traffic is met

Average Major Street % of Warrant	Average Minor Street % of Warrant
1085.3 / 630 = 172%	481.3 / 53 = 917%

Hourly percent of warrant

	7:00 - 8:00	8:00 - 9:00	9:00 - 10:00	10:00 - 11:00	11:00 - 12:00	12:00 - 13:00	13:00 - 14:00	14:00 - 15:00	15:00 - 16:00	16:00 - 17:00	17:00 - 18:00	18:00 - 19:00
Major St.	179%	159%	140%	125%	116%	142%	183%	167%	199%	223%	229%	206%
Minor St.	1352%	1013%	901%	815%	764%	777%	899%	924%	907%	970%	922%	756%

80% Combination of Conditions A & B is not applicable

Warrant No. 2 - Four Hour Vehicular Volume is met

Hourly percent of warrant

	7:00 - 8:00	8:00 - 9:00	9:00 - 10:00	10:00 - 11:00	11:00 - 12:00	12:00 - 13:00	13:00 - 14:00	14:00 - 15:00	15:00 - 16:00	16:00 - 17:00	17:00 - 18:00	18:00 - 19:00
Minor St.	1183%	887%	763%	538%	430%	686%	787%	808%	793%	848%	807%	662%

Warrant No. 3 - Peak Hour is met

	Percent of warrant		Percent of warrant
Overall Peak Hour:	16:30 - 17:30	Higher Volume Side Street Peak Hour:	7:00 - 8:00
Minor St.	676%	Minor St.	855%

Warrant No. 4 - Pedestrian Volume. Pedestrian volume shown are minumum volumes assuming heavy major street traffic. If these volumes are met, warrant 4 requires further engineering analysis

Minimum 4 hour ped. volume crossing major street	Minimum peak hour ped. volume crossing major street
75	93

Number of pedestrians crossing major street

	7:00 - 8:00	8:00 - 9:00	9:00 - 10:00	10:00 - 11:00	11:00 - 12:00	12:00 - 13:00	13:00 - 14:00	14:00 - 15:00	15:00 - 16:00	16:00 - 17:00	17:00 - 18:00	18:00 - 19:00
Major St.	0	0	0	0	0	2	0	1	1	1	0	0

Warrant No. 7 - Crash Experience (Requires 3 criteria analysis by engineering)

Total Number: 0 From: 1/1/2005 to 1/1/2008
Accident Rate: 0.00 per million entering vehicles

Types of Accidents	No.	/	Avg.		No.	/	Avg.
Right Angle	0	/	0.0	Rear End	0	/	0.0
Lost Control	0	/	0.0	Side Swipe	0	/	0.0
Left Turn	0	/	0.0	Other	0	/	0.0

SOUTH CAROLINA DEPARTMENT OF TRANSPORTATION
DISTRICT 1
TRAFFIC ENGINEERING

County: Richland City: Columbia Date: 11/28/2016

Major Rt: Lake Murray Blvd * Not on State System Minor Rt: Parkridge Dr * Not on State System

Day of Week: Monday Weather: Clear Office: Short Counts JMS

Type of Control: Signal Speed Limit (major st) 45

Direction of Minor Street: N-S Intersection ADT - 11730 (Calc)

Number of Lanes (major st)* 2 Number of Lanes (minor st)* 1

* Each Direction

INTERSECTION VOLUME SUMMARY

	From N Parkridge Dr				From S Parkridge Dr				From E Lake Murray Blvd				From W Lake Murray Blvd				Total	Total
	LT	STR	RT	TOT	LT	STR	RT	TOT	LT	STR	RT	TOT	LT	STR	RT	TOT	Vol	Peds
7:00 - 7:15	0	0	0	0	10	0	3	13	3	47	0	50	0	43	30	73	136	0
7:15 - 7:30	0	0	0	0	5	0	4	9	2	61	0	63	0	89	56	145	217	0
7:30 - 7:45	0	0	0	0	20	0	1	21	5	46	0	51	0	115	96	211	283	0
7:45 - 8:00	0	0	0	0	18	0	1	19	4	49	0	53	0	109	119	228	300	0
8:00 - 8:15	0	0	0	0	17	0	2	19	4	53	0	57	0	92	97	189	265	0
8:15 - 8:30	0	0	0	0	16	0	2	18	5	43	0	48	0	81	51	132	198	0
8:30 - 8:45	0	0	0	0	14	0	0	14	3	35	0	38	0	64	53	117	169	2
8:45 - 9:00	0	0	0	0	22	0	2	24	2	54	0	56	0	77	50	127	207	0
9:00 - 9:15	0	0	0	0	16	0	1	17	3	36	0	39	0	58	33	91	147	1
9:15 - 9:30	0	0	0	0	19	0	0	19	1	41	0	42	0	29	31	60	121	0
9:30 - 9:45	0	0	0	0	20	0	0	20	4	31	0	35	0	32	30	62	117	0
9:45 - 10:00	0	0	0	0	24	0	2	26	0	40	0	40	0	25	37	62	128	0
10:00 - 10:15	0	0	0	0	24	0	0	24	1	39	0	40	0	41	26	67	131	0
10:15 - 10:30	0	0	0	0	21	0	2	23	3	28	0	31	0	35	37	72	126	0
10:30 - 10:45	0	0	0	0	18	0	0	18	4	17	0	21	0	15	26	41	80	0
10:45 - 11:00	0	0	0	0	36	0	3	39	3	20	0	23	0	20	32	52	114	0
11:00 - 11:15	0	0	0	0	35	0	2	37	4	39	0	43	0	29	26	55	135	0
11:15 - 11:30	0	0	0	0	26	0	1	27	3	46	0	49	0	30	41	71	147	0
11:30 - 11:45	0	0	0	0	24	0	4	28	2	49	0	51	0	31	45	76	155	0
11:45 - 12:00	0	0	0	0	32	0	4	36	4	55	0	59	0	53	44	97	192	0
12:00 - 12:15	0	0	0	0	44	0	2	46	0	53	0	53	0	44	43	87	186	0
12:15 - 12:30	0	0	0	0	45	0	1	46	1	54	0	55	0	46	53	99	200	0
12:30 - 12:45	0	0	0	0	34	0	3	37	4	49	0	53	0	54	39	93	183	0
12:45 - 13:00	0	0	0	0	26	0	0	26	3	39	0	42	0	39	44	83	151	0
13:00 - 13:15	0	0	0	0	39	0	2	41	1	55	0	56	0	46	52	98	195	0
13:15 - 13:30	0	0	0	0	35	0	4	39	3	25	0	28	0	36	26	62	129	0
13:30 - 13:45	0	0	0	0	51	0	1	52	4	32	0	36	0	36	36	72	160	0
13:45 - 14:00	0	0	0	0	45	0	6	51	0	37	0	37	0	37	32	69	157	0
14:00 - 14:15	0	0	0	0	45	0	5	50	1	42	0	43	0	32	30	62	155	0
14:15 - 14:30	0	0	0	0	46	0	5	51	2	55	0	57	0	52	38	90	198	0
14:30 - 14:45	0	0	0	0	41	0	3	44	0	35	0	35	0	40	33	73	152	0
14:45 - 15:00	0	0	0	0	45	0	3	48	2	46	0	48	0	43	33	76	172	0
15:00 - 15:15	0	0	0	0	44	0	3	47	2	51	0	53	0	53	26	79	179	0
15:15 - 15:30	0	0	0	0	39	0	2	41	6	59	0	65	0	40	38	78	184	0
15:30 - 15:45	0	0	0	0	52	0	5	57	2	60	0	62	0	40	31	71	190	0
15:45 - 16:00	0	0	0	0	58	0	2	60	3	63	0	66	0	48	29	77	203	0
16:00 - 16:15	0	0	0	0	49	0	5	54	1	66	0	67	0	62	32	94	215	0
16:15 - 16:30	0	0	0	0	58	0	3	61	3	102	0	105	0	78	37	115	281	0
16:30 - 16:45	0	0	0	0	72	0	8	80	0	90	0	90	0	69	32	101	271	0
16:45 - 17:00	0	0	0	0	34	0	3	37	1	91	0	92	0	59	28	87	216	0
17:00 - 17:15	0	0	0	0	60	0	5	65	1	137	0	138	0	76	27	103	306	0
17:15 - 17:30	0	0	0	0	79	0	8	87	4	138	0	142	0	75	32	107	336	0
17:30 - 17:45	0	0	0	0	55	0	4	59	2	101	0	103	0	90	28	118	280	0
17:45 - 18:00	0	0	0	0	55	0	5	60	3	94	0	97	0	62	32	94	251	0
18:00 - 18:15	0	0	0	0	52	0	2	54	3	65	0	68	0	69	28	97	219	0
18:15 - 18:30	0	0	0	0	45	0	2	47	3	53	0	56	0	66	21	87	190	0
18:30 - 18:45	0	0	0	0	36	0	2	38	2	43	0	45	0	45	31	76	159	0
18:45 - 19:00	0	0	0	0	42	0	3	45	1	44	0	45	0	57	27	84	174	0
TOTAL	0	0	0	0	1743	0	131	1874	118	2608	0	2726	0	2562	1898	4460	9060	3
Trucks	0	0	0	0	3	0	0	3	0	9	0	9	0	9	2	11	23	0.3%
School Buses	0	0	0	0	1	0	0	1	0	8	0	8	0	13	0	13	22	0.2%

TOTAL AND PEAK HOUR VOLUME DIAGRAMS

Lake Murray Blvd AT Parkridge Dr Date: 11/28/2016

12.0 HOUR TOTAL VOLUME
FROM 7:00 TO 15:00

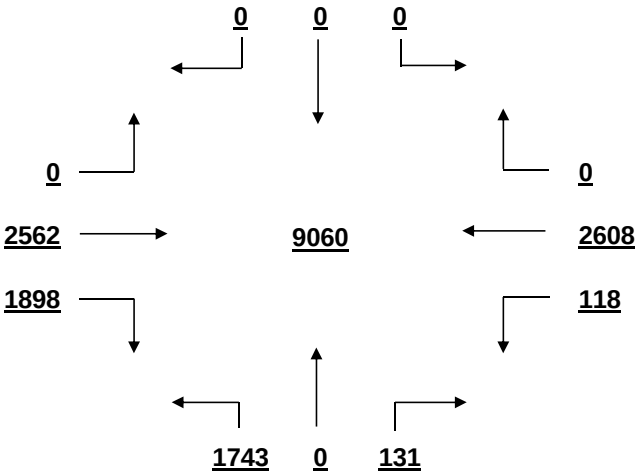

OVERALL PEAK HOUR VOLUME
FROM 17:00 TO 18:00

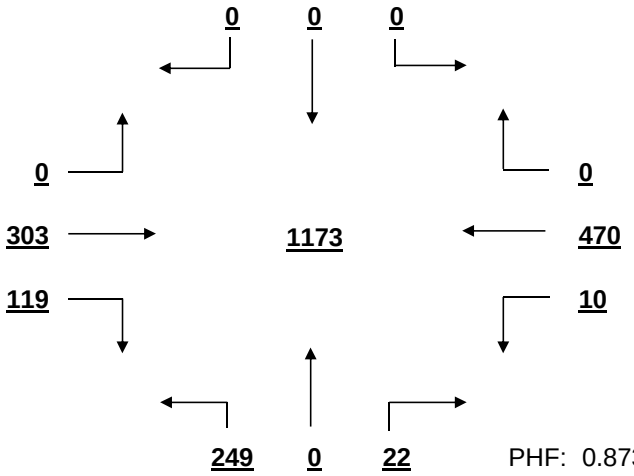

PHF: 0.873

AM PEAK HOUR VOLUME (0:00-10:45)
FROM 7:15 TO 8:15

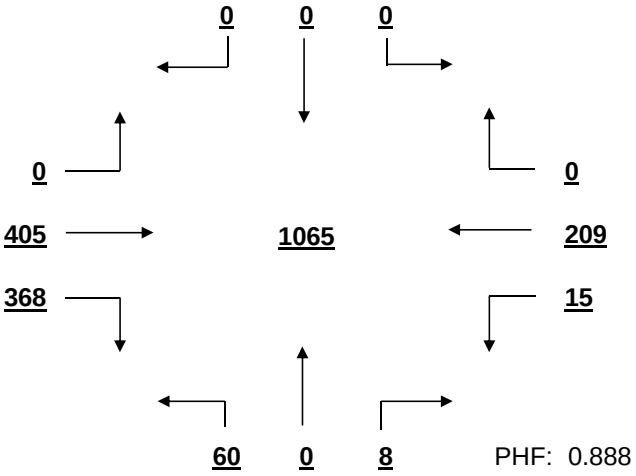

PHF: 0.888

PM PEAK HOUR VOLUME (14:15-23:45)
FROM 17:00 TO 18:00

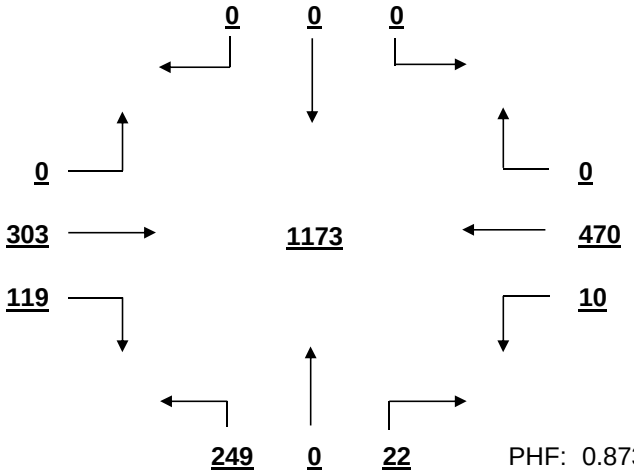

PHF: 0.873

MID-DAY PEAK HOUR VOLUME (11:00-14:00)
FROM 11:45 TO 12:45

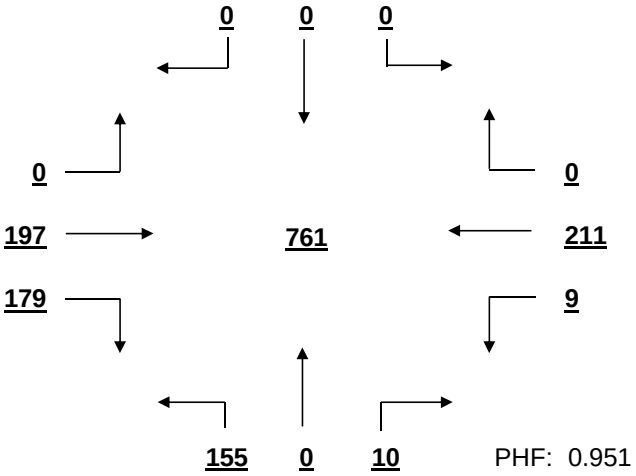

PHF: 0.951

OTHER HOUR VOLUME
FROM 7:00 TO 8:00

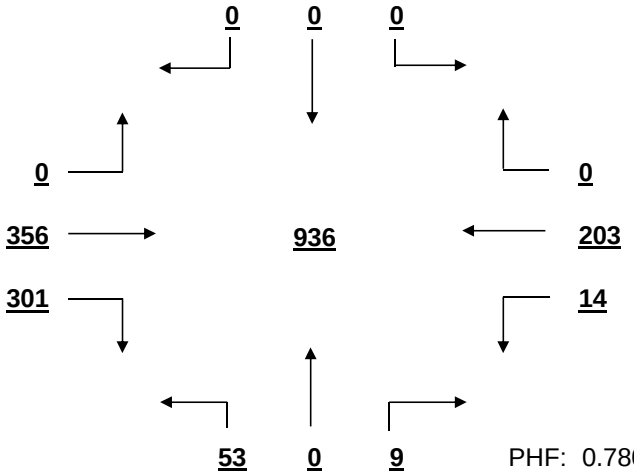

PHF: 0.780

SIGNAL WARRANT ANALYSIS

Lake Murray Blvd AT Parkridge Dr Date: 11/28/2016

Minor Street Volume, percent of total = 20.7%
Percent of Left Turns from Minor Street = 93.0%
Percent of Right Turns from Minor Street = 7.0%
Percent of Minor Street Right Turns to Remove from Warrant Analysis = 0%
WARRANT BASIS = **70%**

Warrant No. 1 - Vehicular Volume is met

Condition A - Minimum Vehicular Volume is met

Average Major Street % of Warrant				Average Minor Street % of Warrant			
598.8	/ 420	=	143%	156.2	/ 105	=	149%

Hourly percent of warrant

	7:00 - 8:00	8:00 - 9:00	9:00 - 10:00	10:00 - 11:00	11:00 - 12:00	12:00 - 13:00	13:00 - 14:00	14:00 - 15:00	15:00 - 16:00	16:00 - 17:00	17:00 - 18:00	18:00 - 19:00
Major St.	208%	182%	103%	83%	119%	135%	109%	115%	131%	179%	215%	133%
Minor St.	59%	71%	78%	99%	122%	148%	174%	184%	195%	221%	258%	175%

Condition B - Interruption to Continuous Traffic is not met

Average Major Street % of Warrant				Average Minor Street % of Warrant			
598.8	/ 630	=	95%	156.2	/ 53	=	297%

Hourly percent of warrant

	7:00 - 8:00	8:00 - 9:00	9:00 - 10:00	10:00 - 11:00	11:00 - 12:00	12:00 - 13:00	13:00 - 14:00	14:00 - 15:00	15:00 - 16:00	16:00 - 17:00	17:00 - 18:00	18:00 - 19:00
Major St.	139%	121%	68%	55%	80%	90%	73%	77%	87%	119%	143%	89%
Minor St.	118%	143%	156%	198%	244%	295%	349%	368%	390%	442%	516%	350%

80% Combination of Conditions A & B is not applicable

Warrant No. 2 - Four Hour Vehicular Volume is met

Hourly percent of warrant

	7:00 - 8:00	8:00 - 9:00	9:00 - 10:00	10:00 - 11:00	11:00 - 12:00	12:00 - 13:00	13:00 - 14:00	14:00 - 15:00	15:00 - 16:00	16:00 - 17:00	17:00 - 18:00	18:00 - 19:00
Minor St.	99%	89%	41%	44%	76%	108%	98%	110%	138%	265%	463%	126%

Warrant No. 3 - Peak Hour is met

Percent of warrant			Percent of warrant		
Overall Peak Hour:	17:00 - 18:00		Higher Volume Side Street Peak Hour:	17:00 - 18:00	
Minor St.	206%		Minor St.	206%	

Warrant No. 4 - Pedestrian Volume. Pedestrian volume shown are minumum volumes assuming heavy major street traffic. If these volumes are met, warrant 4 requires further engineering analysis

Minimum 4 hour ped. volume crossing major street	Minimum peak hour ped. volume crossing major street
75	93

Number of pedestrians crossing major street

	7:00 - 8:00	8:00 - 9:00	9:00 - 10:00	10:00 - 11:00	11:00 - 12:00	12:00 - 13:00	13:00 - 14:00	14:00 - 15:00	15:00 - 16:00	16:00 - 17:00	17:00 - 18:00	18:00 - 19:00
Major St.	0	2	1	0	0	0	0	0	0	0	0	0

Warrant No. 7 - Crash Experience (Requires 3 criteria analysis by engineering)

Total Number: 0 From: 1/1/2005 to 1/1/2008
Accident Rate: 0.00 per million entering vehicles

Types of Accidents	No.	/	Avg.		No.	/	Avg.
Right Angle	0	/	0.0	Rear End	0	/	0.0
Lost Control	0	/	0.0	Side Swipe	0	/	0.0
Left Turn	0	/	0.0	Other	0	/	0.0

SOUTH CAROLINA DEPARTMENT OF TRANSPORTATION
DISTRICT 1
TRAFFIC ENGINEERING

County: Richland City: Columbia Date: 11/28/2016

Major Rt: Columbiana Dr * Not on State System Minor Rt: Columbia Ave-Gateway Academy * Not on State System

Day of Week: Monday Weather: Clear Office: Short Counts JMS

Type of Control: Signal Speed Limit (major st) 30

Direction of Minor Street: N-S Intersection ADT - 12900 (Calc)

Number of Lanes (major st)* 1 Number of Lanes (minor st)* 1

* Each Direction

INTERSECTION VOLUME SUMMARY

	From N Columbia Ave-Gatew				From S Columbia Ave-Gatew				From E Columbiana Dr				From W Columbiana Dr				Total	Total
	LT	STR	RT	TOT	LT	STR	RT	TOT	LT	STR	RT	TOT	LT	STR	RT	TOT	Vol	Peds
7:00 - 7:15	1	0	6	7	4	0	5	9	3	40	0	43	0	63	0	63	122	0
7:15 - 7:30	4	0	9	13	3	0	4	7	1	67	0	68	3	111	1	115	203	0
7:30 - 7:45	4	0	10	14	5	0	7	12	2	58	0	60	1	169	4	174	260	0
7:45 - 8:00	5	0	8	13	3	0	4	7	2	27	0	29	1	85	0	86	135	0
8:00 - 8:15	5	0	5	10	5	0	9	14	3	40	0	43	1	91	3	95	162	0
8:15 - 8:30	5	2	6	13	6	0	6	12	4	35	0	39	1	80	2	83	147	0
8:30 - 8:45	3	0	6	9	8	0	3	11	5	32	0	37	0	72	3	75	132	0
8:45 - 9:00	0	0	2	2	5	0	10	15	7	27	1	35	0	86	3	89	141	1
9:00 - 9:15	0	0	1	1	3	0	3	6	2	24	0	26	0	53	1	54	87	0
9:15 - 9:30	1	0	2	3	1	0	9	10	3	48	0	51	1	80	3	84	148	0
9:30 - 9:45	0	0	1	1	2	0	3	5	1	36	0	37	0	113	0	113	156	0
9:45 - 10:00	0	0	2	2	1	0	4	5	4	44	0	48	0	95	7	102	157	0
10:00 - 10:15	1	0	2	3	1	0	8	9	3	41	1	45	0	99	1	100	157	0
10:15 - 10:30	0	0	0	0	3	0	3	6	3	60	0	63	0	108	0	108	177	0
10:30 - 10:45	1	0	0	1	4	0	5	9	6	45	0	51	0	93	2	95	156	0
10:45 - 11:00	2	0	0	2	5	0	5	10	7	69	0	76	0	127	3	130	218	0
11:00 - 11:15	0	0	0	0	6	0	9	15	8	106	0	114	0	116	5	121	250	0
11:15 - 11:30	0	0	0	0	6	0	13	19	10	86	0	96	1	126	3	130	245	0
11:30 - 11:45	1	0	3	4	7	0	16	23	6	101	0	107	0	137	1	138	272	0
11:45 - 12:00	2	0	2	4	4	0	18	22	6	109	0	115	0	120	3	123	264	0
12:00 - 12:15	0	0	0	0	4	0	13	17	7	108	0	115	0	178	4	182	314	0
12:15 - 12:30	1	0	1	2	4	0	15	19	9	116	0	125	0	145	6	151	297	0
12:30 - 12:45	1	0	1	2	9	0	12	21	9	117	0	126	0	145	4	149	298	0
12:45 - 13:00	1	0	0	1	3	0	6	9	20	151	0	171	0	131	4	135	316	0
13:00 - 13:15	0	0	1	1	2	0	7	9	1	93	0	94	0	105	1	106	210	0
13:15 - 13:30	0	0	1	1	3	0	9	12	7	109	0	116	0	89	2	91	220	0
13:30 - 13:45	0	0	1	1	3	0	5	8	6	121	0	127	0	118	2	120	256	0
13:45 - 14:00	1	0	0	1	2	0	7	9	11	137	0	148	0	126	9	135	293	0
14:00 - 14:15	0	0	1	1	2	0	7	9	13	134	0	147	0	111	5	116	273	0
14:15 - 14:30	0	0	0	0	5	0	7	12	10	115	0	125	0	133	5	138	275	0
14:30 - 14:45	0	0	1	1	2	0	9	11	8	134	1	143	1	108	6	115	270	0
14:45 - 15:00	1	0	2	3	6	0	7	13	8	113	0	121	0	117	4	121	258	0
15:00 - 15:15	0	0	2	2	4	0	2	6	4	124	0	128	1	90	2	93	229	0
15:15 - 15:30	0	2	1	3	5	0	5	10	20	115	0	135	0	100	4	104	252	0
15:30 - 15:45	1	0	3	4	3	0	8	11	9	103	0	112	0	97	5	102	229	0
15:45 - 16:00	0	0	0	0	3	0	8	11	2	93	0	95	0	109	4	113	219	0
16:00 - 16:15	3	0	6	9	1	0	6	7	7	114	0	121	0	137	3	140	277	0
16:15 - 16:30	2	0	3	5	5	0	8	13	5	143	0	148	0	160	10	170	336	0
16:30 - 16:45	1	1	11	13	3	0	9	12	5	143	0	148	2	112	15	129	302	0
16:45 - 17:00	2	0	7	9	3	0	13	16	9	130	0	139	0	139	3	142	306	0
17:00 - 17:15	3	1	19	23	5	0	16	21	7	134	0	141	0	149	8	157	342	0
17:15 - 17:30	2	2	4	8	6	0	9	15	9	114	0	123	0	142	5	147	293	0
17:30 - 17:45	1	2	10	13	6	0	17	23	13	123	0	136	0	136	4	140	312	0
17:45 - 18:00	2	0	14	16	2	0	5	7	11	117	0	128	0	155	6	161	312	0
18:00 - 18:15	2	1	11	14	5	0	5	10	9	141	0	150	0	143	5	148	322	0
18:15 - 18:30	1	1	9	11	6	0	5	11	11	133	0	144	0	173	5	178	344	0
18:30 - 18:45	1	0	4	5	0	0	2	2	6	138	0	144	0	157	2	159	310	0
18:45 - 19:00	0	0	0	0	0	0	0	0	7	81	0	88	0	85	3	88	176	0
TOTAL	61	12	178	251	184	0	366	550	329	4489	3	4821	13	5614	181	5808	11430	1
Trucks	0	0	0	0	0	0	2	2	0	16	0	16	0	9	1	10	28	0.2%
School Buses	0	0	0	0	1	0	1	2	2	9	0	11	0	15	0	15	28	0.2%

TOTAL AND PEAK HOUR VOLUME DIAGRAMS

Columbiana Dr AT Columbia Ave-Gateway Academy Date: 11/28/2016

12.0 HOUR TOTAL VOLUME
FROM 7:00 TO 15:00

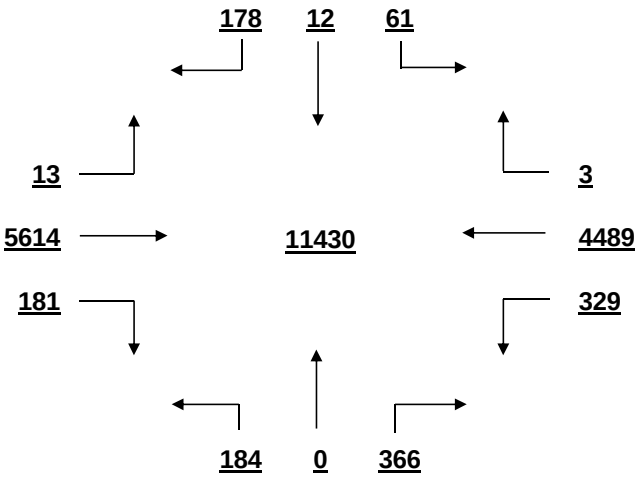

OVERALL PEAK HOUR VOLUME
FROM 17:30 TO 18:30

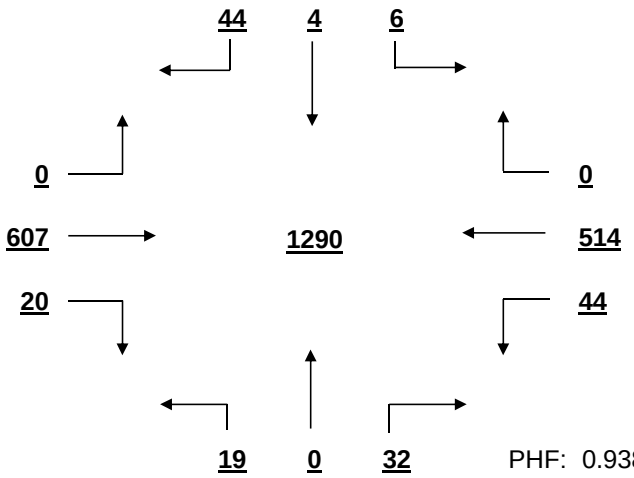

PHF: 0.938

AM PEAK HOUR VOLUME (0:00-10:45)
FROM 7:15 TO 8:15

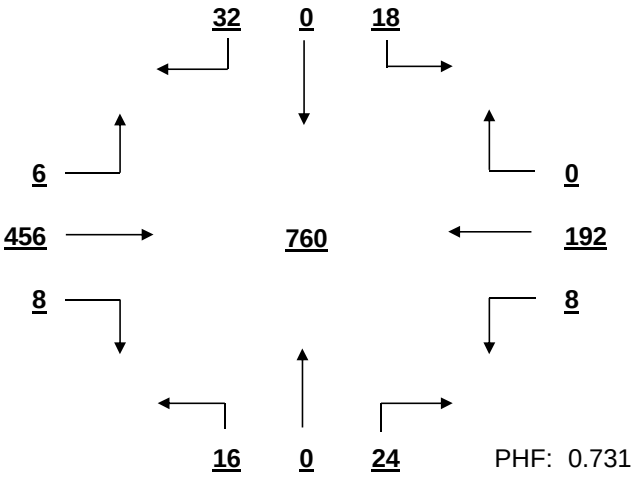

PHF: 0.731

PM PEAK HOUR VOLUME (14:15-23:45)
FROM 17:30 TO 18:30

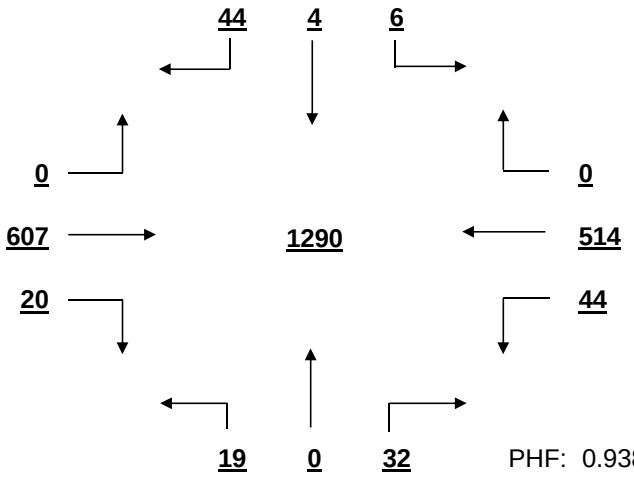

PHF: 0.938

MID-DAY PEAK HOUR VOLUME (11:00-14:00)
FROM 12:00 TO 13:00

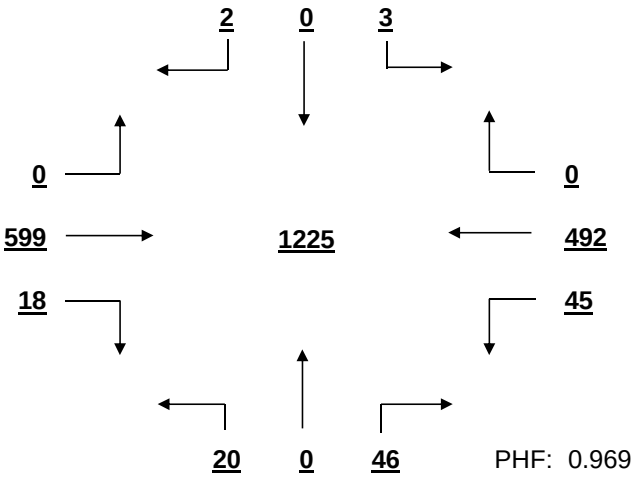

PHF: 0.969

OTHER HOUR VOLUME
FROM 7:00 TO 8:00

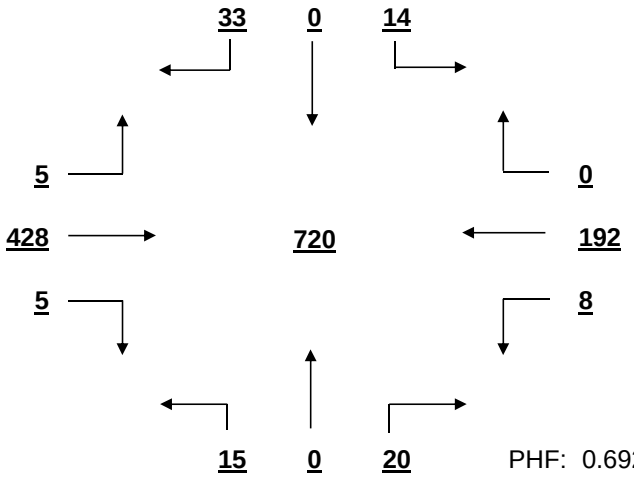

PHF: 0.692

SIGNAL WARRANT ANALYSIS

Columbiana Dr AT Columbia Ave-Gateway Academy Date: 11/28/2016

Minor Street Volume, percent of total = 7.0%
Percent of Left Turns from Minor Street = 30.6%
Percent of Right Turns from Minor Street = 67.9%
Percent of Minor Street Right Turns to Remove from Warrant Analysis = 0%
WARRANT BASIS = **100%**

Warrant No. 1 - Vehicular Volume is not met

Condition A - Minimum Vehicular Volume is not met

Average Major Street % of Warrant				Average Minor Street % of Warrant			
885.8	/	500	= 177%	45.8	/	150	= 31%

Hourly percent of warrant

	7:00 - 8:00	8:00 - 9:00	9:00 - 10:00	10:00 - 11:00	11:00 - 12:00	12:00 - 13:00	13:00 - 14:00	14:00 - 15:00	15:00 - 16:00	16:00 - 17:00	17:00 - 18:00	18:00 - 19:00
Major St.	128%	99%	103%	134%	189%	231%	187%	205%	176%	227%	227%	220%
Minor St.	31%	35%	17%	23%	53%	44%	25%	30%	25%	32%	44%	20%

Condition B - Interruption to Continuous Traffic is not met

Average Major Street % of Warrant				Average Minor Street % of Warrant			
885.8	/	750	= 118%	45.8	/	75	= 61%

Hourly percent of warrant

	7:00 - 8:00	8:00 - 9:00	9:00 - 10:00	10:00 - 11:00	11:00 - 12:00	12:00 - 13:00	13:00 - 14:00	14:00 - 15:00	15:00 - 16:00	16:00 - 17:00	17:00 - 18:00	18:00 - 19:00
Major St.	85%	66%	69%	89%	126%	154%	125%	137%	118%	152%	151%	147%
Minor St.	63%	69%	35%	45%	105%	88%	51%	60%	51%	64%	88%	40%

80% Combination of Conditions A & B is not met

Warrant No. 2 - Four Hour Vehicular Volume is not met

Hourly percent of warrant

	7:00 - 8:00	8:00 - 9:00	9:00 - 10:00	10:00 - 11:00	11:00 - 12:00	12:00 - 13:00	13:00 - 14:00	14:00 - 15:00	15:00 - 16:00	16:00 - 17:00	17:00 - 18:00	18:00 - 19:00
Minor St.	23%	20%	10%	18%	71%	83%	34%	48%	30%	64%	87%	37%

Warrant No. 3 - Peak Hour is not met

Percent of warrant			Percent of warrant		
Overall Peak Hour: 17:30 - 18:30			Higher Volume Side Street Peak Hour: 11:15 - 12:15		
Minor St.	36%		Minor St.	40%	

Warrant No. 4 - Pedestrian Volume. Pedestrian volume shown are minumum volumes assuming heavy major street traffic. If these volumes are met, warrant 4 requires further engineering analysis

Minimum 4 hour ped. volume crossing major street: 107

Minimum peak hour ped. volume crossing major street: 133

Number of pedestrians crossing major street

	7:00 - 8:00	8:00 - 9:00	9:00 - 10:00	10:00 - 11:00	11:00 - 12:00	12:00 - 13:00	13:00 - 14:00	14:00 - 15:00	15:00 - 16:00	16:00 - 17:00	17:00 - 18:00	18:00 - 19:00
Major St.	0	1	0	0	0	0	0	0	0	0	0	0

Warrant No. 7 - Crash Experience (Requires 3 criteria analysis by engineering)

Total Number: 0 From: 1/1/2005 to 1/1/2008

Accident Rate: 0.00 per million entering vehicles

Types of Accidents	No.	/	Avg.		No.	/	Avg.
Right Angle	0	/	0.0	Rear End	0	/	0.0
Lost Control	0	/	0.0	Side Swipe	0	/	0.0
Left Turn	0	/	0.0	Other	0	/	0.0

SOUTH CAROLINA DEPARTMENT OF TRANSPORTATION
DISTRICT 1
TRAFFIC ENGINEERING

County: Richland City: Columbia Date: 11/30/2016

Major Rt: Columbiana Dr * Not on State System Minor Rt: Crossbow Dr-Texas Roadhouse * Not on State System

Day of Week: Wednesday Weather: Rain Office: Short Counts JMS

Type of Control: Signal Speed Limit (major st) 30

Direction of Minor Street: N-S Intersection ADT - 15540 (Calc)

Number of Lanes (major st)* 1 Number of Lanes (minor st)* 1

* Each Direction

INTERSECTION VOLUME SUMMARY

	From N Crossbow Dr-Texas				From S Crossbow Dr-Texas				From E Columbiana Dr				From W Columbiana Dr				Total	Total
	LT	STR	RT	TOT	LT	STR	RT	TOT	LT	STR	RT	TOT	LT	STR	RT	TOT	Vol	Peds
7:00 - 7:15	0	0	0	0	18	0	10	28	15	28	0	43	0	50	40	90	161	0
7:15 - 7:30	0	0	0	0	25	0	27	52	26	26	1	53	0	59	43	102	207	0
7:30 - 7:45	0	0	0	0	29	0	26	55	38	34	0	72	0	108	63	171	298	0
7:45 - 8:00	0	0	0	0	26	0	28	54	21	30	0	51	1	141	34	176	281	0
8:00 - 8:15	0	0	0	0	10	0	17	27	0	32	1	33	1	154	8	163	223	0
8:15 - 8:30	0	0	0	0	12	0	13	25	4	38	1	43	1	179	5	185	253	0
8:30 - 8:45	0	0	0	0	7	0	8	15	4	37	0	41	1	159	9	169	225	0
8:45 - 9:00	0	0	0	0	9	0	8	17	3	17	0	20	0	77	4	81	118	0
9:00 - 9:15	0	0	0	0	5	0	6	11	1	17	0	18	0	65	3	68	97	0
9:15 - 9:30	1	0	0	1	5	0	3	8	2	12	2	16	2	53	2	57	82	0
9:30 - 9:45	0	0	1	1	6	0	4	10	2	37	1	40	0	97	2	99	150	0
9:45 - 10:00	0	0	0	0	4	0	10	14	0	43	4	47	2	121	6	129	190	0
10:00 - 10:15	2	0	1	3	16	1	4	21	4	36	2	42	5	122	3	130	196	0
10:15 - 10:30	2	0	0	2	11	0	10	21	3	47	3	53	0	114	11	125	201	0
10:30 - 10:45	2	0	1	3	15	0	3	18	1	61	7	69	1	131	2	134	224	0
10:45 - 11:00	2	0	1	3	5	1	6	12	5	66	3	74	3	124	5	132	221	0
11:00 - 11:15	1	0	1	2	6	0	9	15	6	67	12	85	2	131	3	136	238	1
11:15 - 11:30	2	0	2	4	7	0	0	7	3	89	12	104	8	134	6	148	263	0
11:30 - 11:45	3	0	6	9	9	0	5	14	3	89	7	99	6	136	4	146	268	0
11:45 - 12:00	2	0	4	6	8	0	7	15	7	102	6	115	17	138	11	166	302	0
12:00 - 12:15	6	0	5	11	8	0	12	20	5	113	5	123	4	179	7	190	344	0
12:15 - 12:30	6	0	12	18	11	0	4	15	3	118	15	136	8	180	4	192	361	0
12:30 - 12:45	5	0	10	15	7	0	8	15	5	114	8	127	10	183	4	197	354	1
12:45 - 13:00	2	0	6	8	10	0	10	20	3	119	7	129	6	157	5	168	325	0
13:00 - 13:15	6	0	8	14	10	0	4	14	11	120	8	139	4	155	3	162	329	1
13:15 - 13:30	8	0	4	12	4	0	1	5	6	118	6	130	4	107	4	115	262	1
13:30 - 13:45	5	0	7	12	11	0	5	16	2	154	8	164	9	124	7	140	332	1
13:45 - 14:00	4	0	2	6	5	0	8	13	7	106	7	120	9	77	2	88	227	0
14:00 - 14:15	5	0	5	10	4	0	8	12	19	124	4	147	5	106	12	123	292	1
14:15 - 14:30	6	0	2	8	18	0	13	31	19	163	7	189	6	130	15	151	379	0
14:30 - 14:45	6	0	10	16	11	0	7	18	7	133	6	146	3	119	15	137	317	1
14:45 - 15:00	3	0	7	10	40	0	11	51	12	127	9	148	5	107	18	130	339	0
15:00 - 15:15	8	0	2	10	34	1	18	53	5	127	10	142	1	129	13	143	348	1
15:15 - 15:30	5	1	11	17	23	0	10	33	13	115	6	134	8	103	6	117	301	0
15:30 - 15:45	7	0	4	11	10	0	8	18	9	123	6	138	6	127	6	139	306	0
15:45 - 16:00	3	0	6	9	21	0	7	28	11	112	5	128	5	138	10	153	318	0
16:00 - 16:15	6	0	6	12	23	1	10	34	12	128	10	150	10	118	14	142	338	1
16:15 - 16:30	6	0	8	14	23	0	22	45	8	126	13	147	6	120	10	136	342	0
16:30 - 16:45	7	0	10	17	11	0	16	27	8	130	14	152	9	151	12	172	368	5
16:45 - 17:00	7	1	9	17	18	0	15	33	11	152	13	176	5	166	9	180	406	0
17:00 - 17:15	3	0	7	10	10	0	9	19	9	135	7	151	10	144	6	160	340	1
17:15 - 17:30	4	0	6	10	16	1	12	29	10	147	15	172	15	152	13	180	391	0
17:30 - 17:45	6	0	10	16	16	0	17	33	25	132	7	164	14	150	11	175	388	0
17:45 - 18:00	7	0	10	17	20	0	14	34	21	142	10	173	14	171	16	201	425	0
18:00 - 18:15	12	0	16	28	16	0	10	26	10	115	10	135	12	144	5	161	350	0
18:15 - 18:30	7	1	6	14	7	1	6	14	18	120	11	149	16	128	6	150	327	0
18:30 - 18:45	5	0	13	18	7	4	11	22	9	144	17	170	7	141	2	150	360	0
18:45 - 19:00	10	2	10	22	10	0	9	19	5	139	12	156	8	103	3	114	311	0
TOTAL	182	5	229	416	637	10	489	1136	431	4504	318	5253	269	6102	502	6873	13678	15
Trucks	0	0	0	0	1	0	1	2	1	5	2	8	1	10	0	11	21	0.2%
School Buses	0	0	0	0	13	0	2	15	2	7	0	9	0	10	6	16	40	0.3%

TOTAL AND PEAK HOUR VOLUME DIAGRAMS

Columbiana Dr AT Crossbow Dr-Texas Roadhouse Date: 11/30/2016

12.0 HOUR TOTAL VOLUME
FROM 7:00 TO 15:00

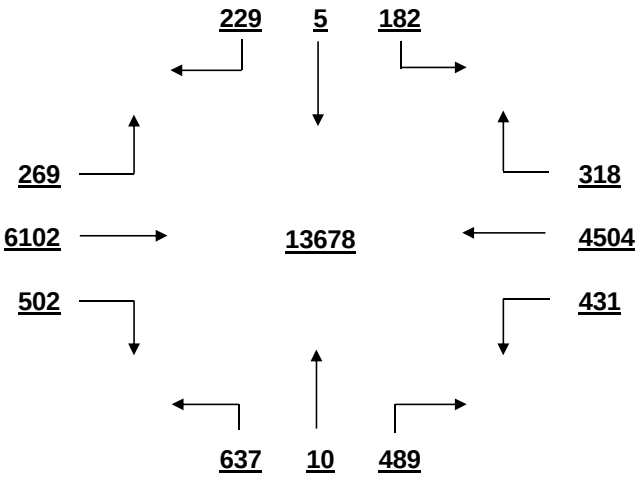

OVERALL PEAK HOUR VOLUME
FROM 17:15 TO 18:15

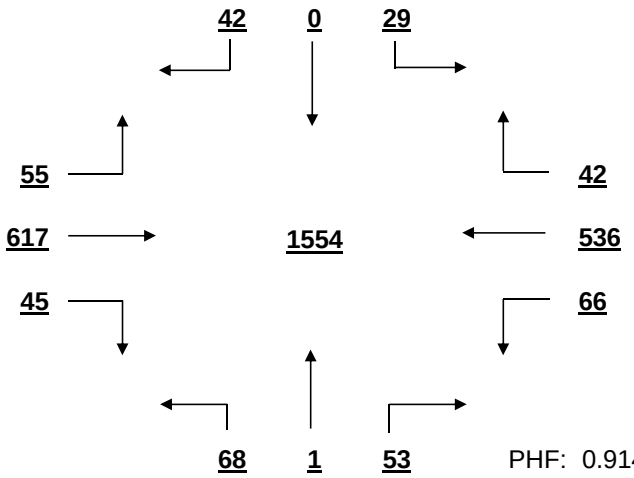

PHF: 0.914

AM PEAK HOUR VOLUME (0:00-10:45)
FROM 7:30 TO 8:30

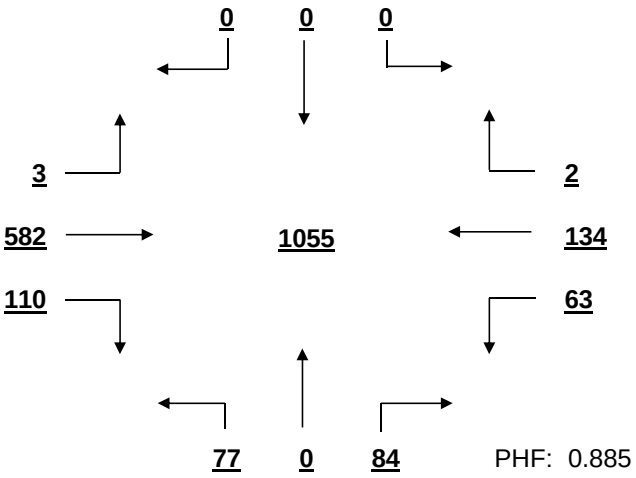

PHF: 0.885

PM PEAK HOUR VOLUME (14:15-23:45)
FROM 17:15 TO 18:15

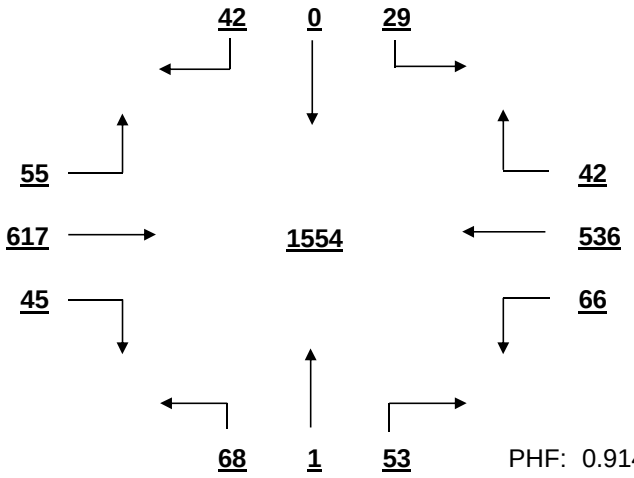

PHF: 0.914

MID-DAY PEAK HOUR VOLUME (11:00-14:00)
FROM 12:00 TO 13:00

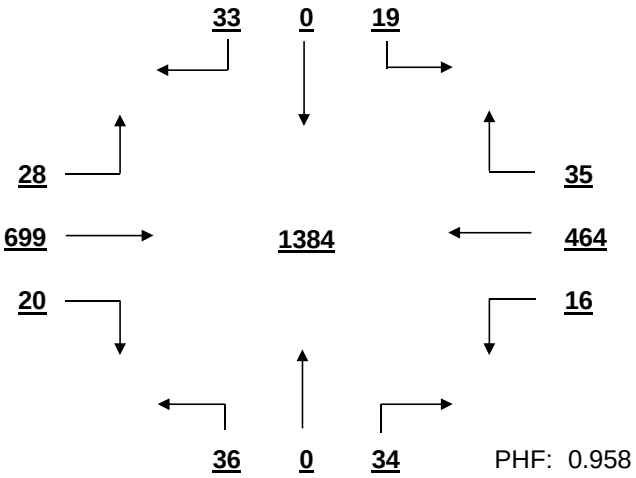

PHF: 0.958

OTHER HOUR VOLUME
FROM 7:00 TO 8:00

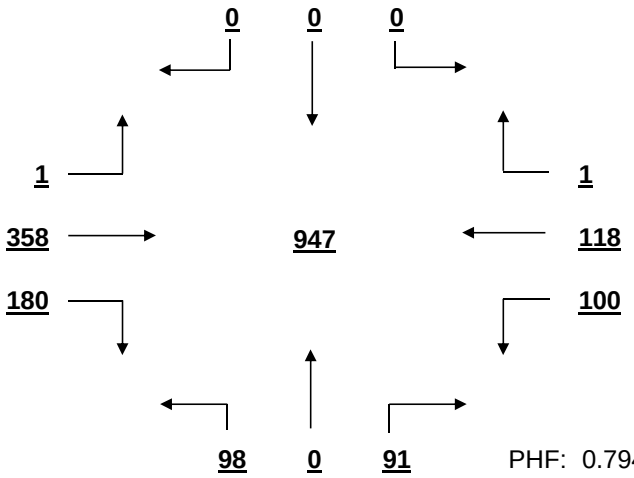

PHF: 0.794

SIGNAL WARRANT ANALYSIS

Columbiana Dr AT Crossbow Dr-Texas Roadhouse Date: 11/30/2016

Minor Street Volume, percent of total = 11.3%
Percent of Left Turns from Minor Street = 52.8%
Percent of Right Turns from Minor Street = 46.3%
Percent of Minor Street Right Turns to Remove from Warrant Analysis = 0%
WARRANT BASIS = **100%**

Warrant No. 1 - Vehicular Volume is not met

Condition A - Minimum Vehicular Volume is not met

Average Major Street % of Warrant				Average Minor Street % of Warrant			
1010.5	/	500	= 202%	94.7	/	150	= 63%

Hourly percent of warrant

	7:00 - 8:00	8:00 - 9:00	9:00 - 10:00	10:00 - 11:00	11:00 - 12:00	12:00 - 13:00	13:00 - 14:00	14:00 - 15:00	15:00 - 16:00	16:00 - 17:00	17:00 - 18:00	18:00 - 19:00
Major St.	152%	147%	95%	152%	200%	252%	212%	234%	219%	251%	275%	237%
Minor St.	126%	56%	29%	48%	34%	47%	32%	75%	88%	93%	77%	55%

Condition B - Interruption to Continuous Traffic is not met

Average Major Street % of Warrant				Average Minor Street % of Warrant			
1010.5	/	750	= 135%	94.7	/	75	= 126%

Hourly percent of warrant

	7:00 - 8:00	8:00 - 9:00	9:00 - 10:00	10:00 - 11:00	11:00 - 12:00	12:00 - 13:00	13:00 - 14:00	14:00 - 15:00	15:00 - 16:00	16:00 - 17:00	17:00 - 18:00	18:00 - 19:00
Major St.	101%	98%	63%	101%	133%	168%	141%	156%	146%	167%	183%	158%
Minor St.	252%	112%	57%	96%	68%	93%	64%	149%	176%	185%	153%	109%

80% Combination of Conditions A & B is not met

Warrant No. 2 - Four Hour Vehicular Volume is met

Hourly percent of warrant

	7:00 - 8:00	8:00 - 9:00	9:00 - 10:00	10:00 - 11:00	11:00 - 12:00	12:00 - 13:00	13:00 - 14:00	14:00 - 15:00	15:00 - 16:00	16:00 - 17:00	17:00 - 18:00	18:00 - 19:00
Minor St.	117%	50%	16%	45%	52%	88%	55%	140%	162%	174%	144%	103%

Warrant No. 3 - Peak Hour is met

	Percent of warrant		Percent of warrant
Overall Peak Hour:	17:15 - 18:15	Higher Volume Side Street Peak Hour:	7:00 - 8:00
Minor St.	105%	Minor St.	64%

Warrant No. 4 - Pedestrian Volume. Pedestrian volume shown are minumum volumes assuming heavy major street traffic. If these volumes are met, warrant 4 requires further engineering analysis

Minimum 4 hour ped. volume crossing major street	Minimum peak hour ped. volume crossing major street
107	133

Number of pedestrians crossing major street

	7:00 - 8:00	8:00 - 9:00	9:00 - 10:00	10:00 - 11:00	11:00 - 12:00	12:00 - 13:00	13:00 - 14:00	14:00 - 15:00	15:00 - 16:00	16:00 - 17:00	17:00 - 18:00	18:00 - 19:00
Major St.	0	0	0	0	1	1	3	2	0	6	1	0

Warrant No. 7 - Crash Experience (Requires 3 criteria analysis by engineering)

Total Number: 0 From: 1/1/2005 to 1/1/2008
Accident Rate: 0.00 per million entering vehicles

Types of Accidents	No.	/	Avg.		No.	/	Avg.
Right Angle	0	/	0.0	Rear End	0	/	0.0
Lost Control	0	/	0.0	Side Swipe	0	/	0.0
Left Turn	0	/	0.0	Other	0	/	0.0

SOUTH CAROLINA DEPARTMENT OF TRANSPORTATION
DISTRICT 1
TRAFFIC ENGINEERING

County: Richland City: Columbia Date: 11/29/2016

Major Rt: Columbiana Dr * Not on State System Minor Rt: Columbiana Cir-Lanneau Ct * Not on State System

Day of Week: Tuesday Weather: Rain Office: Short Counts JMS

Type of Control: Signal Speed Limit (major st) 30

Direction of Minor Street: E-W Intersection ADT - 13720 (Calc)

Number of Lanes (major st)* 2 Number of Lanes (minor st)* 1 * Each Direction

INTERSECTION VOLUME SUMMARY

	From N Columbiana Dr				From S Columbiana Dr				From E Columbiana Cir-Lan				From W Columbiana Cir-Lan				Total	Total
	LT	STR	RT	TOT	LT	STR	RT	TOT	LT	STR	RT	TOT	LT	STR	RT	TOT	Vol	Peds
7:00 - 7:15	2	62	0	64	1	27	0	28	0	0	0	0	0	0	3	3	95	0
7:15 - 7:30	1	168	1	170	3	53	2	58	1	0	2	3	0	0	8	8	239	0
7:30 - 7:45	4	235	0	239	2	66	2	70	1	0	3	4	0	0	4	4	317	0
7:45 - 8:00	8	239	0	247	3	42	4	49	1	0	1	2	1	1	3	5	303	0
8:00 - 8:15	9	186	2	197	3	42	3	48	0	0	5	5	1	1	3	5	255	0
8:15 - 8:30	2	166	3	171	8	43	1	52	0	0	5	5	0	0	10	10	238	1
8:30 - 8:45	5	149	1	155	3	48	0	51	0	0	5	5	1	0	5	6	217	2
8:45 - 9:00	6	98	2	106	5	54	3	62	1	0	4	5	1	0	5	6	179	0
9:00 - 9:15	2	57	0	59	2	29	4	35	0	0	4	4	0	0	3	3	101	0
9:15 - 9:30	2	89	2	93	1	27	7	35	2	1	1	4	1	1	2	4	136	0
9:30 - 9:45	4	105	1	110	1	56	4	61	3	0	4	7	1	0	0	1	179	0
9:45 - 10:00	5	99	1	105	5	52	12	69	3	1	5	9	1	1	3	5	188	0
10:00 - 10:15	3	100	3	106	2	50	10	62	3	0	5	8	1	1	3	5	181	0
10:15 - 10:30	6	103	4	113	3	56	12	71	9	0	11	20	1	0	1	2	206	1
10:30 - 10:45	6	96	3	105	5	72	11	88	12	0	8	20	0	2	9	11	224	0
10:45 - 11:00	6	92	0	98	5	70	19	94	15	0	8	23	1	0	4	5	220	0
11:00 - 11:15	4	103	2	109	7	0	25	32	16	0	8	24	1	0	3	4	169	0
11:15 - 11:30	8	106	4	118	5	104	16	125	9	2	13	24	2	1	9	12	279	0
11:30 - 11:45	2	116	4	122	2	95	20	117	20	3	10	33	1	0	9	10	282	0
11:45 - 12:00	6	144	2	152	6	120	14	140	15	1	8	24	0	3	9	12	328	0
12:00 - 12:15	2	131	2	135	10	99	17	126	32	4	13	49	3	1	2	6	316	0
12:15 - 12:30	5	108	2	115	13	113	17	143	31	1	11	43	2	2	5	9	310	0
12:30 - 12:45	4	139	1	144	10	93	21	124	17	1	14	32	0	0	4	4	304	0
12:45 - 13:00	9	143	4	156	10	122	17	149	27	2	12	41	2	2	9	13	359	0
13:00 - 13:15	4	145	3	152	7	95	22	124	34	3	17	54	6	0	7	13	343	1
13:15 - 13:30	8	124	2	134	5	103	24	132	23	1	19	43	5	0	14	19	328	0
13:30 - 13:45	3	133	1	137	9	105	19	133	33	2	24	59	6	0	7	13	342	0
13:45 - 14:00	4	142	1	147	10	140	23	173	15	1	9	25	3	0	7	10	355	1
14:00 - 14:15	5	92	1	98	11	81	15	107	22	2	12	36	4	0	5	9	250	0
14:15 - 14:30	7	102	2	111	6	110	18	134	21	2	15	38	4	2	9	15	298	0
14:30 - 14:45	5	128	6	139	4	106	13	123	14	3	11	28	4	1	7	12	302	0
14:45 - 15:00	8	131	4	143	6	100	14	120	17	0	13	30	1	2	8	11	304	0
15:00 - 15:15	5	78	2	85	9	72	11	92	16	2	9	27	2	0	9	11	215	0
15:15 - 15:30	4	118	3	125	14	108	7	129	21	2	13	36	5	1	15	21	311	0
15:30 - 15:45	4	121	2	127	11	86	16	113	15	2	15	32	6	0	6	12	284	0
15:45 - 16:00	7	99	3	109	8	96	17	121	17	1	13	31	3	1	2	6	267	0
16:00 - 16:15	8	112	8	128	8	120	11	139	23	0	14	37	5	0	6	11	315	0
16:15 - 16:30	6	121	6	133	12	117	12	141	18	0	10	28	5	1	5	11	313	1
16:30 - 16:45	5	116	2	123	6	120	15	141	18	2	21	41	6	0	6	12	317	0
16:45 - 17:00	6	86	1	93	3	112	16	131	10	0	13	23	1	1	8	10	257	1
17:00 - 17:15	6	100	3	109	11	117	9	137	16	0	7	23	3	1	3	7	276	0
17:15 - 17:30	1	103	3	107	16	138	16	170	17	2	14	33	4	0	11	15	325	0
17:30 - 17:45	2	50	2	54	5	84	7	96	9	1	3	13	1	0	4	5	168	0
17:45 - 18:00	7	114	4	125	7	155	11	173	9	2	16	27	6	0	2	8	333	0
18:00 - 18:15	5	111	2	118	7	153	10	170	15	3	4	22	5	0	5	10	320	0
18:15 - 18:30	8	102	9	119	3	159	7	169	19	4	16	39	7	0	8	15	342	0
18:30 - 18:45	5	95	3	103	7	129	11	147	20	6	10	36	6	2	6	14	300	0
18:45 - 19:00	6	89	3	98	2	107	5	114	9	3	7	19	3	2	6	11	242	0
TOTAL	240	5646	120	6006	302	4246	570	5118	649	60	465	1174	122	30	282	434	12732	8
Trucks	0	18	1	19	1	13	4	18	1	0	3	4	0	0	2	2	43	0.3%
School Buses	0	21	0	21	1	11	1	13	1	0	0	1	0	0	0	0	35	0.3%

TOTAL AND PEAK HOUR VOLUME DIAGRAMS

Columbiana Dr AT Columbiana Cir-Lanneau Ct Date: 11/29/2016

12.0 HOUR TOTAL VOLUME
FROM 7:00 TO 15:00

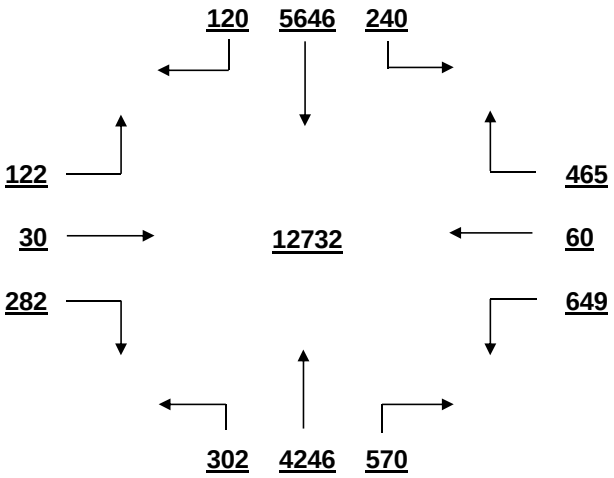

OVERALL PEAK HOUR VOLUME
FROM 12:45 TO 13:45

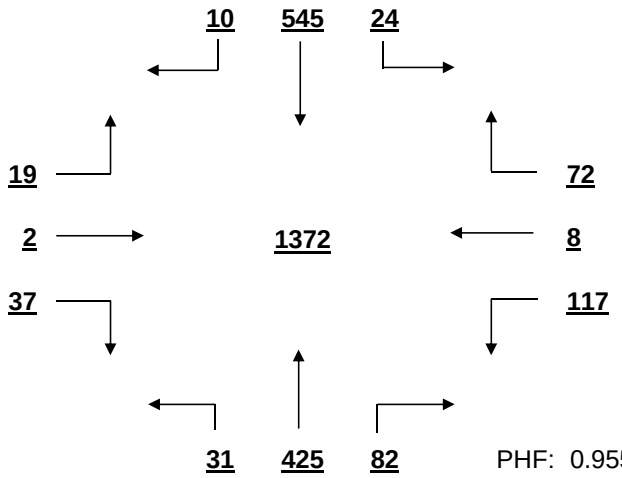

PHF: 0.955

AM PEAK HOUR VOLUME (0:00-10:45)
FROM 7:15 TO 8:15

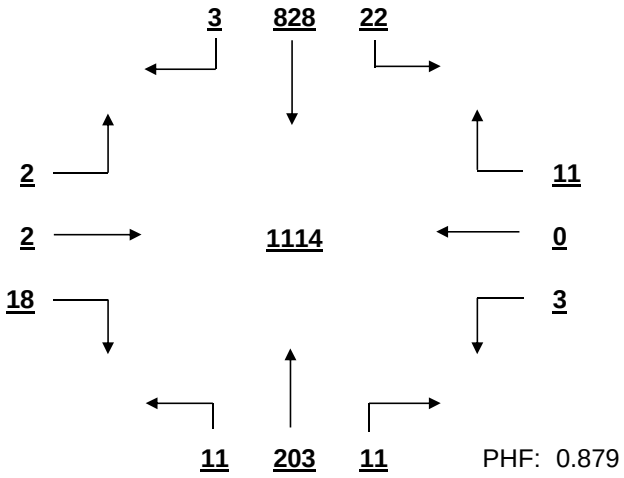

PHF: 0.879

PM PEAK HOUR VOLUME (14:15-23:45)
FROM 17:45 TO 18:45

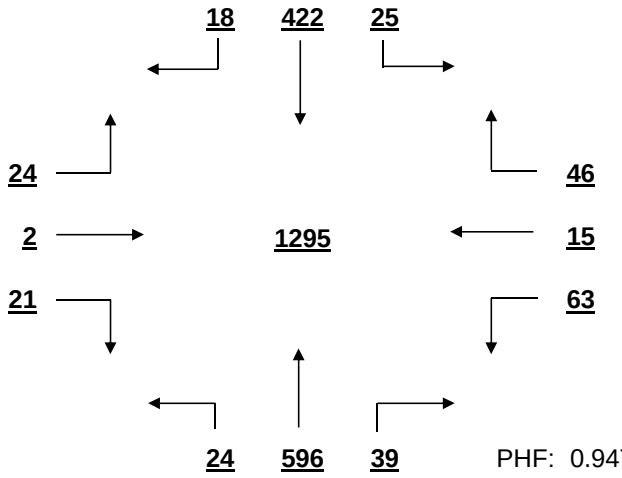

PHF: 0.947

MID-DAY PEAK HOUR VOLUME (11:00-14:00)
FROM 12:45 TO 13:45

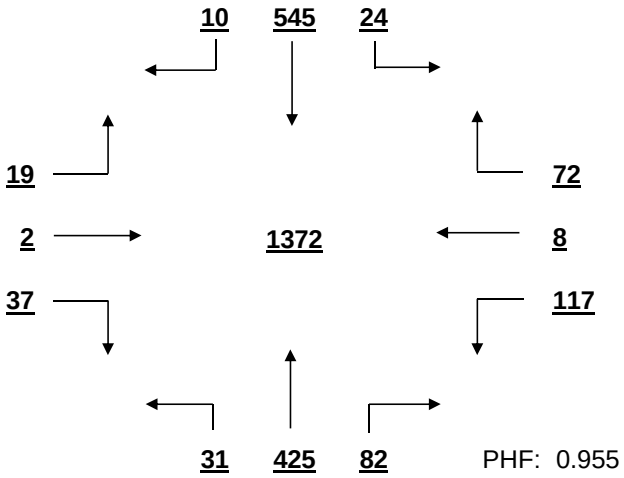

PHF: 0.955

OTHER HOUR VOLUME
FROM 7:00 TO 8:00

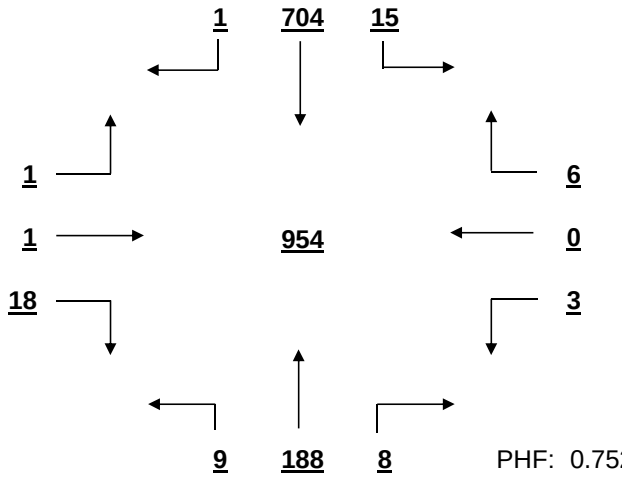

PHF: 0.752

SIGNAL WARRANT ANALYSIS

Columbiana Dr AT Columbiana Cir-Lanneau Ct Date: 11/29/2016

Minor Street Volume, percent of total = 12.6%
Percent of Left Turns from Minor Street = 47.9%
Percent of Right Turns from Minor Street = 46.5%
Percent of Minor Street Right Turns to Remove from Warrant Analysis = 0%
WARRANT BASIS = **100%**

Warrant No. 1 - Vehicular Volume is met

Condition A - Minimum Vehicular Volume is not met

Average Major Street % of Warrant				Average Minor Street % of Warrant			
927.0	/ 600	=	155%	97.8	/ 150	=	65%

Hourly percent of warrant

	7:00 - 8:00	8:00 - 9:00	9:00 - 10:00	10:00 - 11:00	11:00 - 12:00	12:00 - 13:00	13:00 - 14:00	14:00 - 15:00	15:00 - 16:00	16:00 - 17:00	17:00 - 18:00	18:00 - 19:00
Major St.	154%	140%	95%	123%	153%	182%	189%	163%	150%	172%	162%	173%
Minor St.	13%	18%	16%	47%	70%	110%	121%	88%	84%	86%	64%	77%

Condition B - Interruption to Continuous Traffic is met

Average Major Street % of Warrant				Average Minor Street % of Warrant			
927.0	/ 900	=	103%	97.8	/ 75	=	130%

Hourly percent of warrant

	7:00 - 8:00	8:00 - 9:00	9:00 - 10:00	10:00 - 11:00	11:00 - 12:00	12:00 - 13:00	13:00 - 14:00	14:00 - 15:00	15:00 - 16:00	16:00 - 17:00	17:00 - 18:00	18:00 - 19:00
Major St.	103%	94%	63%	82%	102%	121%	126%	108%	100%	114%	108%	115%
Minor St.	27%	36%	32%	95%	140%	220%	241%	176%	168%	172%	128%	155%

80% Combination of Conditions A & B is not met

Warrant No. 2 - Four Hour Vehicular Volume is not met

Hourly percent of warrant

	7:00 - 8:00	8:00 - 9:00	9:00 - 10:00	10:00 - 11:00	11:00 - 12:00	12:00 - 13:00	13:00 - 14:00	14:00 - 15:00	15:00 - 16:00	16:00 - 17:00	17:00 - 18:00	18:00 - 19:00
Minor St.	12%	14%	8%	31%	63%	135%	158%	88%	74%	95%	64%	87%

Warrant No. 3 - Peak Hour is not met

Percent of warrant			Percent of warrant		
Overall Peak Hour: 12:45 - 13:45			Higher Volume Side Street Peak Hour: 12:45 - 13:45		
Minor St.	81%		Minor St.	81%	

Warrant No. 4 - Pedestrian Volume. Pedestrian volume shown are minumum volumes assuming heavy major street traffic. If these volumes are met, warrant 4 requires further engineering analysis

Minimum 4 hour ped. volume crossing major street: 107

Minimum peak hour ped. volume crossing major street: 133

Number of pedestrians crossing major street

	7:00 - 8:00	8:00 - 9:00	9:00 - 10:00	10:00 - 11:00	11:00 - 12:00	12:00 - 13:00	13:00 - 14:00	14:00 - 15:00	15:00 - 16:00	16:00 - 17:00	17:00 - 18:00	18:00 - 19:00
Major St.	0	3	0	1	0	0	1	0	0	2	0	0

Warrant No. 7 - Crash Experience (Requires 3 criteria analysis by engineering)

Total Number: 0 From: 1/1/2005 to 1/1/2008

Accident Rate: 0.00 per million entering vehicles

Types of Accidents	No.	/	Avg.		No.	/	Avg.
Right Angle	0	/	0.0	Rear End	0	/	0.0
Lost Control	0	/	0.0	Side Swipe	0	/	0.0
Left Turn	0	/	0.0	Other	0	/	0.0

SOUTH CAROLINA DEPARTMENT OF TRANSPORTATION
DISTRICT 1
TRAFFIC ENGINEERING

County: Richland City: Columbia Date: 11/30/2016

Major Rt: Harbison Blvd * Not on State System Minor Rt: Parkridge Dr * Not on State System

Day of Week: Wednesday Weather: Rain Office: Short Counts JMS

Type of Control: Signal Speed Limit (major st) 40

Direction of Minor Street: N-S Intersection ADT - 13190 (Calc)

Number of Lanes (major st)* 2 Number of Lanes (minor st)* 1

* Each Direction

INTERSECTION VOLUME SUMMARY

	From N Parkridge Dr				From S Parkridge Dr				From E Harbison Blvd				From W Harbison Blvd				Total	Total
	LT	STR	RT	TOT	LT	STR	RT	TOT	LT	STR	RT	TOT	LT	STR	RT	TOT	Vol	Peds
7:00 - 7:15	3	0	22	25	0	0	0	0	0	92	3	95	11	27	0	38	158	0
7:15 - 7:30	4	0	58	62	0	0	0	0	0	94	6	100	26	48	0	74	236	1
7:30 - 7:45	4	0	124	128	0	0	0	0	0	105	4	109	12	39	0	51	288	0
7:45 - 8:00	3	0	155	158	0	0	0	0	0	91	9	100	25	55	0	80	338	2
8:00 - 8:15	10	0	130	140	0	0	0	0	0	79	5	84	28	45	0	73	297	0
8:15 - 8:30	4	0	124	128	0	0	0	0	0	81	4	85	25	49	0	74	287	2
8:30 - 8:45	4	0	101	105	0	0	0	0	0	96	8	104	17	51	0	68	277	0
8:45 - 9:00	6	0	77	83	0	0	0	0	0	103	3	106	20	47	0	67	256	0
9:00 - 9:15	4	0	43	47	0	0	0	0	0	67	3	70	11	35	0	46	163	1
9:15 - 9:30	2	0	21	23	0	0	0	0	0	53	1	54	21	37	0	58	135	0
9:30 - 9:45	2	0	23	25	0	0	0	0	0	92	4	96	32	46	0	78	199	0
9:45 - 10:00	2	0	25	27	0	0	0	0	0	74	1	75	12	50	0	62	164	0
10:00 - 10:15	7	0	40	47	0	0	0	0	0	75	2	77	30	63	0	93	217	0
10:15 - 10:30	5	0	28	33	0	0	0	0	0	95	5	100	24	55	0	79	212	2
10:30 - 10:45	3	0	29	32	0	0	0	0	0	76	2	78	29	59	0	88	198	0
10:45 - 11:00	3	0	33	36	0	0	0	0	0	81	4	85	28	63	0	91	212	0
11:00 - 11:15	2	0	18	20	0	0	0	0	0	79	2	81	22	53	0	75	176	1
11:15 - 11:30	2	0	25	27	0	0	0	0	0	88	2	90	25	61	0	86	203	0
11:30 - 11:45	4	0	35	39	0	0	0	0	0	93	1	94	32	65	0	97	230	0
11:45 - 12:00	4	0	55	59	0	0	0	0	0	96	3	99	48	82	0	130	288	0
12:00 - 12:15	6	0	66	72	0	0	0	0	0	100	1	101	26	69	0	95	268	0
12:15 - 12:30	5	0	43	48	0	0	0	0	0	90	6	96	34	91	0	125	269	0
12:30 - 12:45	9	0	34	43	0	0	0	0	0	73	4	77	40	88	0	128	248	2
12:45 - 13:00	9	0	48	57	0	0	0	0	0	98	4	102	39	90	0	129	288	0
13:00 - 13:15	6	0	45	51	0	0	0	0	0	108	7	115	32	95	0	127	293	2
13:15 - 13:30	5	0	38	43	0	0	0	0	0	80	6	86	28	86	0	114	243	0
13:30 - 13:45	5	0	18	23	0	0	0	0	0	78	4	82	23	76	0	99	204	0
13:45 - 14:00	4	0	35	39	0	0	0	0	0	85	5	90	32	79	0	111	240	0
14:00 - 14:15	4	0	36	40	0	0	0	0	0	83	5	88	30	102	0	132	260	0
14:15 - 14:30	3	0	34	37	0	0	0	0	0	54	3	57	36	77	0	113	207	0
14:30 - 14:45	5	0	31	36	0	0	0	0	0	85	4	89	32	83	0	115	240	0
14:45 - 15:00	6	0	34	40	0	0	0	0	0	99	5	104	32	73	0	105	249	0
15:00 - 15:15	6	0	42	48	0	0	0	0	0	84	4	88	35	90	0	125	261	0
15:15 - 15:30	10	0	37	47	0	0	0	0	0	84	3	87	40	70	0	110	244	0
15:30 - 15:45	3	0	36	39	0	0	0	0	0	92	7	99	33	79	0	112	250	0
15:45 - 16:00	7	0	30	37	0	0	0	0	0	101	3	104	41	83	0	124	265	0
16:00 - 16:15	7	0	31	38	0	0	0	0	0	100	7	107	53	98	0	151	296	0
16:15 - 16:30	3	0	37	40	0	0	0	0	0	112	5	117	42	93	0	135	292	1
16:30 - 16:45	9	0	51	60	0	0	0	0	0	121	3	124	58	86	0	144	328	0
16:45 - 17:00	6	0	40	46	0	0	0	0	0	119	6	125	64	91	0	155	326	1
17:00 - 17:15	3	0	42	45	0	0	0	0	0	128	6	134	58	95	0	153	332	1
17:15 - 17:30	2	0	36	38	0	0	0	0	0	114	11	125	60	79	0	139	302	0
17:30 - 17:45	6	0	49	55	0	0	0	0	0	111	7	118	52	117	0	169	342	1
17:45 - 18:00	4	0	33	37	0	0	0	0	0	117	8	125	74	107	0	181	343	0
18:00 - 18:15	7	0	49	56	0	0	0	0	0	90	10	100	37	91	0	128	284	0
18:15 - 18:30	2	0	40	42	0	0	0	0	0	94	7	101	48	107	0	155	298	0
18:30 - 18:45	9	0	34	43	0	0	0	0	0	76	5	81	46	103	0	149	273	0
18:45 - 19:00	1	0	33	34	0	0	0	0	0	75	9	84	46	97	0	143	261	0
TOTAL	230	0	2248	2478	0	0	0	0	0	4361	227	4588	1649	3525	0	5174	12240	17
Trucks	0	0	5	5	0	0	0	0	0	6	0	6	5	12	0	17	28	0.2%
School Buses	1	0	2	3	0	0	0	0	0	27	1	28	0	35	0	35	66	0.5%

TOTAL AND PEAK HOUR VOLUME DIAGRAMS

Harbison Blvd AT Parkridge Dr Date: 11/30/2016

12.0 HOUR TOTAL VOLUME
FROM 7:00 TO 15:00

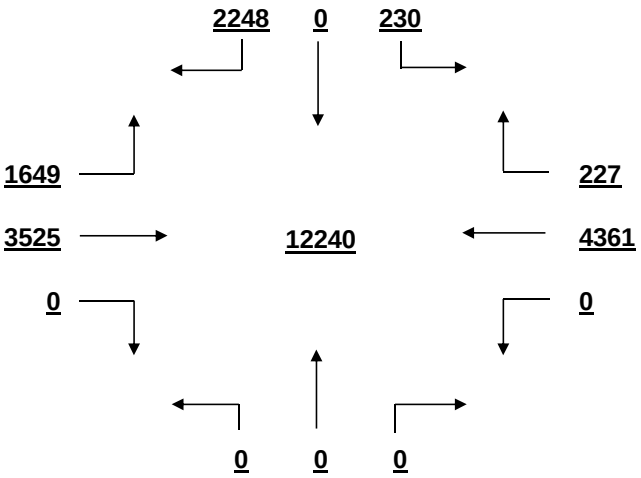

OVERALL PEAK HOUR VOLUME
FROM 17:00 TO 18:00

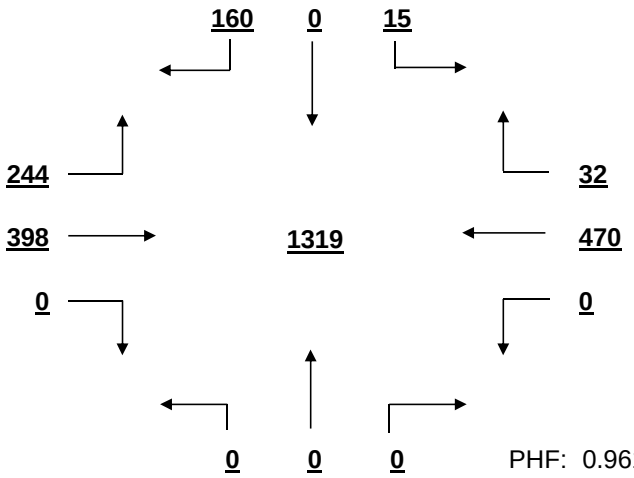

PHF: 0.961

AM PEAK HOUR VOLUME (0:00-10:45)
FROM 7:30 TO 8:30

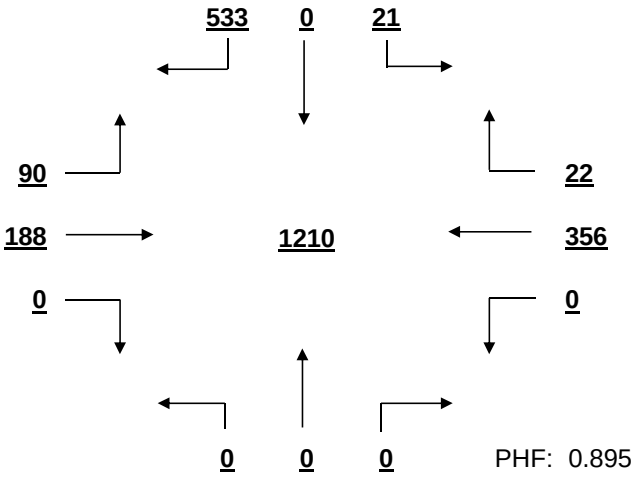

PHF: 0.895

PM PEAK HOUR VOLUME (14:15-23:45)
FROM 17:00 TO 18:00

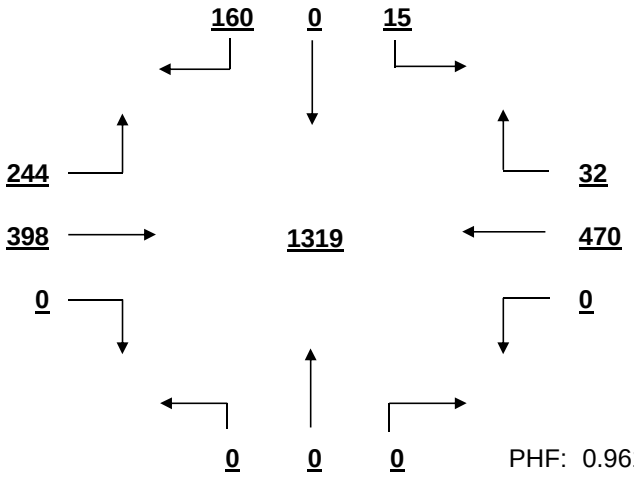

PHF: 0.961

MID-DAY PEAK HOUR VOLUME (11:00-14:00)
FROM 12:15 TO 13:15

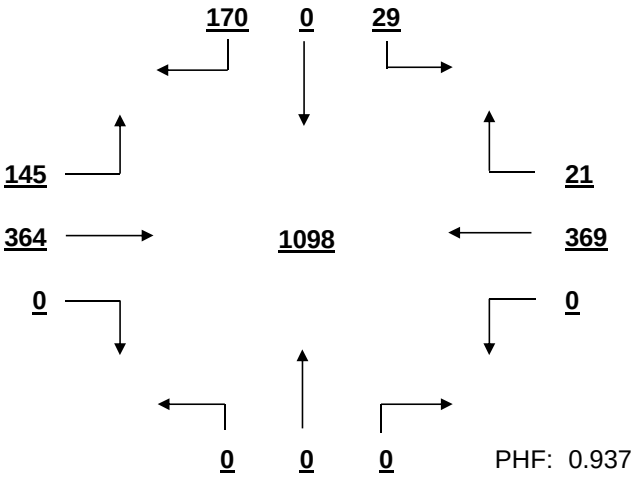

PHF: 0.937

OTHER HOUR VOLUME
FROM 7:00 TO 8:00

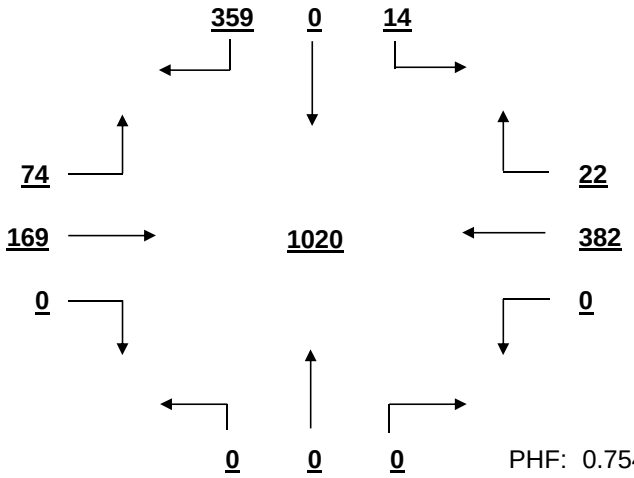

PHF: 0.754

SIGNAL WARRANT ANALYSIS

Harbison Blvd AT Parkridge Dr Date: 11/30/2016

Minor Street Volume, percent of total = 20.2%
Percent of Left Turns from Minor Street = 9.3%
Percent of Right Turns from Minor Street = 90.7%
Percent of Minor Street Right Turns to Remove from Warrant Analysis = 0%
WARRANT BASIS = **100%**

Warrant No. 1 - Vehicular Volume is met

Condition A - Minimum Vehicular Volume is met

Average Major Street % of Warrant	Average Minor Street % of Warrant
813.5 / 600 = 136%	206.5 / 150 = 138%

Hourly percent of warrant

	7:00 - 8:00	8:00 - 9:00	9:00 - 10:00	10:00 - 11:00	11:00 - 12:00	12:00 - 13:00	13:00 - 14:00	14:00 - 15:00	15:00 - 16:00	16:00 - 17:00	17:00 - 18:00	18:00 - 19:00
Major St.	108%	110%	90%	115%	125%	142%	137%	134%	142%	176%	191%	157%
Minor St.	249%	304%	81%	99%	97%	147%	104%	102%	114%	123%	117%	117%

Condition B - Interruption to Continuous Traffic is not met

Average Major Street % of Warrant	Average Minor Street % of Warrant
813.5 / 900 = 90%	206.5 / 75 = 275%

Hourly percent of warrant

	7:00 - 8:00	8:00 - 9:00	9:00 - 10:00	10:00 - 11:00	11:00 - 12:00	12:00 - 13:00	13:00 - 14:00	14:00 - 15:00	15:00 - 16:00	16:00 - 17:00	17:00 - 18:00	18:00 - 19:00
Major St.	72%	73%	60%	77%	84%	95%	92%	89%	94%	118%	127%	105%
Minor St.	497%	608%	163%	197%	193%	293%	208%	204%	228%	245%	233%	233%

80% Combination of Conditions A & B is met

Warrant No. 2 - Four Hour Vehicular Volume is met

Hourly percent of warrant

	7:00 - 8:00	8:00 - 9:00	9:00 - 10:00	10:00 - 11:00	11:00 - 12:00	12:00 - 13:00	13:00 - 14:00	14:00 - 15:00	15:00 - 16:00	16:00 - 17:00	17:00 - 18:00	18:00 - 19:00
Minor St.	141%	176%	39%	60%	65%	118%	80%	75%	91%	142%	155%	110%

Warrant No. 3 - Peak Hour is met

Percent of warrant		Percent of warrant	
Overall Peak Hour: 17:00 - 18:00		Higher Volume Side Street Peak Hour: 7:30 - 8:30	
Minor St.	75%	Minor St.	127%

Warrant No. 4 - Pedestrian Volume. Pedestrian volume shown are minumum volumes assuming heavy major street traffic. If these volumes are met, warrant 4 requires further engineering analysis

Minimum 4 hour ped. volume crossing major street	Minimum peak hour ped. volume crossing major street
107	133

Number of pedestrians crossing major street

	7:00 - 8:00	8:00 - 9:00	9:00 - 10:00	10:00 - 11:00	11:00 - 12:00	12:00 - 13:00	13:00 - 14:00	14:00 - 15:00	15:00 - 16:00	16:00 - 17:00	17:00 - 18:00	18:00 - 19:00
Major St.	1	1	0	2	1	2	2	0	0	1	2	0

Warrant No. 7 - Crash Experience (Requires 3 criteria analysis by engineering)

Total Number: 0 From: 1/1/2005 to 1/1/2008
Accident Rate: 0.00 per million entering vehicles

Types of Accidents	No.	/	Avg.		No.	/	Avg.
Right Angle	0	/	0.0	Rear End	0	/	0.0
Lost Control	0	/	0.0	Side Swipe	0	/	0.0
Left Turn	0	/	0.0	Other	0	/	0.0

SOUTH CAROLINA DEPARTMENT OF TRANSPORTATION
DISTRICT 1
TRAFFIC ENGINEERING

County: Richland City: Columbia Date: 12/1/2016

Major Rt: Woodcross Dr * Not on State System Minor Rt: Fernandina Rd-Wendy's/Hotel * Not on State System

Day of Week: Thursday Weather: Clear Office: Short Counts JMS

Type of Control: Stop Sign Speed Limit (major st) 35

Direction of Minor Street: E-W Intersection ADT - 8900 (Calc)

Number of Lanes (major st)* 1 Number of Lanes (minor st)* 1

* Each Direction

INTERSECTION VOLUME SUMMARY

	From N Woodcross Dr				From S Woodcross Dr				From E Fernandina Rd-Wend				From W Fernandina Rd-Wend				Total	Total
	LT	STR	RT	TOT	LT	STR	RT	TOT	LT	STR	RT	TOT	LT	STR	RT	TOT	Vol	Peds
7:00 - 7:15	0	0	12	12	1	0	0	1	0	31	0	31	2	10	19	31	75	0
7:15 - 7:30	0	0	7	7	2	0	0	2	2	35	1	38	1	17	48	66	113	0
7:30 - 7:45	0	0	7	7	3	0	0	3	4	35	0	39	1	30	95	126	175	0
7:45 - 8:00	1	1	6	8	8	1	1	10	0	22	0	22	1	34	94	129	169	0
8:00 - 8:15	0	2	11	13	4	0	0	4	0	34	1	35	1	34	108	143	195	0
8:15 - 8:30	0	0	3	3	8	0	0	8	0	22	0	22	3	32	82	117	150	0
8:30 - 8:45	0	0	3	3	15	0	0	15	0	32	0	32	1	37	48	86	136	1
8:45 - 9:00	0	0	2	2	12	0	0	12	1	36	0	37	4	31	33	68	119	0
9:00 - 9:15	0	1	5	6	14	0	0	14	1	39	4	44	2	32	11	45	109	0
9:15 - 9:30	4	1	3	8	17	0	0	17	1	42	0	43	3	44	17	64	132	0
9:30 - 9:45	0	0	2	2	8	1	0	9	0	32	0	32	1	38	18	57	100	0
9:45 - 10:00	0	0	3	3	15	1	1	17	1	46	0	47	2	31	16	49	116	0
10:00 - 10:15	2	0	3	5	11	0	0	11	2	35	0	37	2	31	15	48	101	0
10:15 - 10:30	0	0	4	4	16	0	0	16	0	45	0	45	3	29	9	41	106	0
10:30 - 10:45	0	0	1	1	11	2	0	13	0	35	0	35	1	38	11	50	99	0
10:45 - 11:00	1	0	2	3	19	1	0	20	1	48	1	50	4	43	25	72	145	0
11:00 - 11:15	2	0	5	7	16	0	0	16	0	29	2	31	8	52	19	79	133	0
11:15 - 11:30	1	1	9	11	22	1	1	24	0	48	2	50	8	48	12	68	153	0
11:30 - 11:45	2	1	9	12	18	1	1	20	0	56	7	63	8	36	19	63	158	0
11:45 - 12:00	3	0	12	15	22	1	1	24	0	50	4	54	6	63	22	91	184	0
12:00 - 12:15	2	3	9	14	26	5	0	31	0	55	7	62	8	48	32	88	195	0
12:15 - 12:30	4	2	21	27	30	2	1	33	0	37	2	39	24	52	30	106	205	2
12:30 - 12:45	5	5	18	28	32	3	0	35	0	44	8	52	16	45	27	88	203	1
12:45 - 13:00	8	3	13	24	39	4	0	43	1	37	4	42	13	42	23	78	187	0
13:00 - 13:15	6	4	16	26	27	2	0	29	0	51	13	64	16	52	28	96	215	0
13:15 - 13:30	3	2	17	22	24	5	2	31	0	48	6	54	4	53	31	88	195	0
13:30 - 13:45	1	2	16	19	29	5	1	35	0	40	3	43	8	37	20	65	162	0
13:45 - 14:00	2	6	6	14	18	3	0	21	3	46	3	52	8	37	10	55	142	0
14:00 - 14:15	2	4	12	18	30	1	1	32	1	47	3	51	6	46	11	63	164	0
14:15 - 14:30	3	2	9	14	24	4	2	30	2	43	4	49	9	51	27	87	180	0
14:30 - 14:45	1	0	9	10	17	2	1	20	1	35	3	39	6	29	10	45	114	0
14:45 - 15:00	2	0	6	8	15	1	1	17	1	30	4	35	1	36	11	48	108	0
15:00 - 15:15	3	0	8	11	32	1	1	34	2	51	5	58	11	53	14	78	181	0
15:15 - 15:30	5	0	14	19	24	0	0	24	0	42	3	45	11	44	23	78	166	0
15:30 - 15:45	0	0	10	10	30	4	0	34	0	52	1	53	7	34	20	61	158	0
15:45 - 16:00	1	1	12	14	24	0	1	25	0	39	1	40	17	53	21	91	170	0
16:00 - 16:15	3	1	15	19	35	2	1	38	1	36	5	42	12	47	19	78	177	0
16:15 - 16:30	3	2	18	23	28	3	5	36	3	38	2	43	13	49	22	84	186	0
16:30 - 16:45	5	1	5	11	33	3	1	37	2	71	2	75	13	45	20	78	201	1
16:45 - 17:00	4	0	12	16	48	1	1	50	1	40	5	46	15	52	18	85	197	3
17:00 - 17:15	3	0	14	17	56	3	1	60	3	62	0	65	9	48	26	83	225	3
17:15 - 17:30	2	0	12	14	68	6	3	77	1	57	7	65	13	42	27	82	238	1
17:30 - 17:45	5	3	13	21	63	2	3	68	1	60	2	63	8	41	24	73	225	0
17:45 - 18:00	3	0	13	16	54	0	1	55	4	44	4	52	13	51	15	79	202	0
18:00 - 18:15	1	0	14	15	42	1	0	43	1	47	1	49	7	45	17	69	176	0
18:15 - 18:30	2	1	13	16	42	2	0	44	0	35	2	37	12	37	15	64	161	2
18:30 - 18:45	4	1	13	18	39	5	1	45	2	31	2	35	11	46	16	73	171	3
18:45 - 19:00	4	0	14	18	27	4	0	31	0	43	0	43	8	36	12	56	148	0
TOTAL	103	50	461	614	1198	83	33	1314	43	2013	124	2180	361	1961	1290	3612	7720	17
Trucks	1	0	2	3	6	0	0	6	0	5	0	5	2	5	8	15	29	0.4%
School Buses	0	0	0	0	0	0	0	0	0	5	0	5	0	5	3	8	13	0.2%

TOTAL AND PEAK HOUR VOLUME DIAGRAMS

Woodcross Dr AT Fernandina Rd-Wendy's/Hotel Date: 12/1/2016

12.0 HOUR TOTAL VOLUME
FROM 7:00 TO 15:00

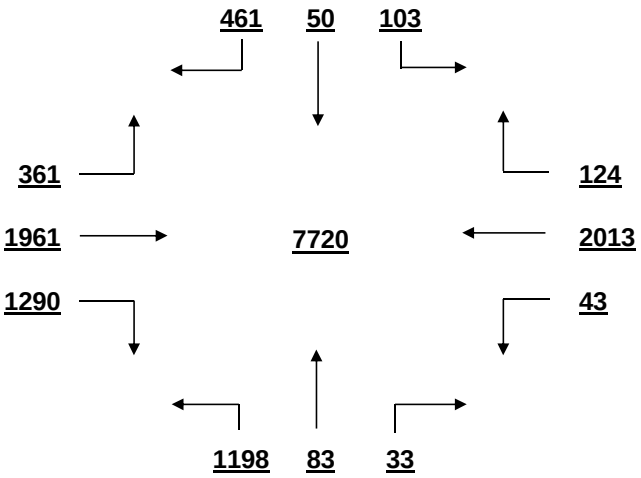

OVERALL PEAK HOUR VOLUME
FROM 17:00 TO 18:00

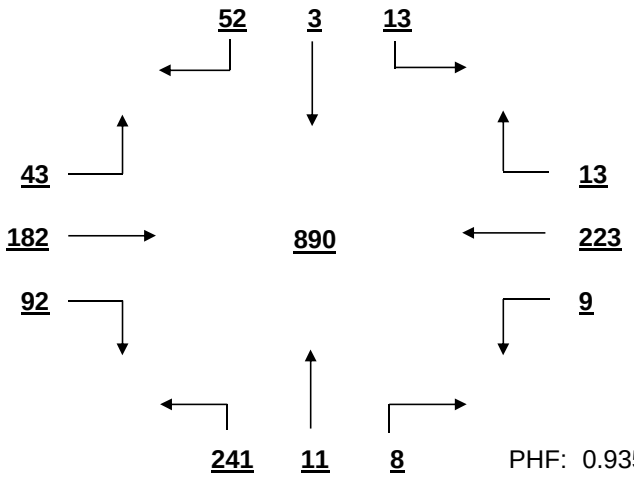

PHF: 0.935

AM PEAK HOUR VOLUME (0:00-10:45)
FROM 7:30 TO 8:30

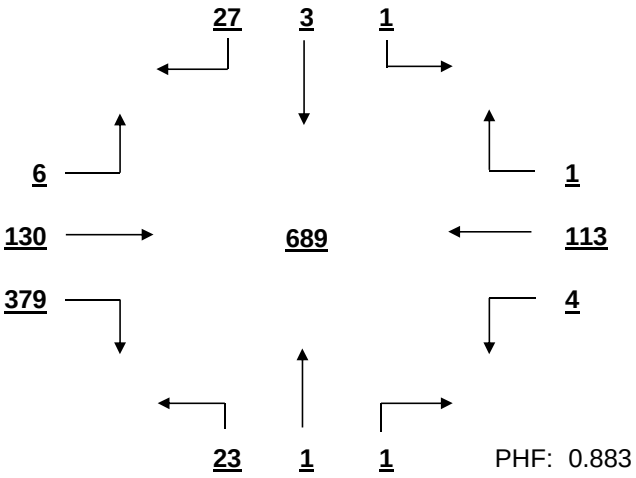

PHF: 0.883

PM PEAK HOUR VOLUME (14:15-23:45)
FROM 17:00 TO 18:00

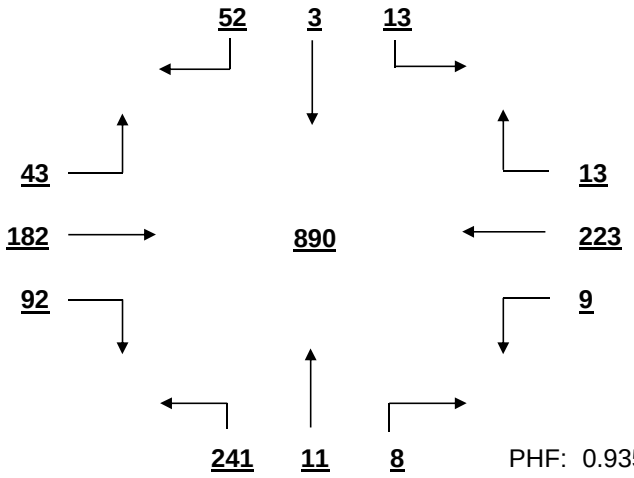

PHF: 0.935

MID-DAY PEAK HOUR VOLUME (11:00-14:00)
FROM 12:15 TO 13:15

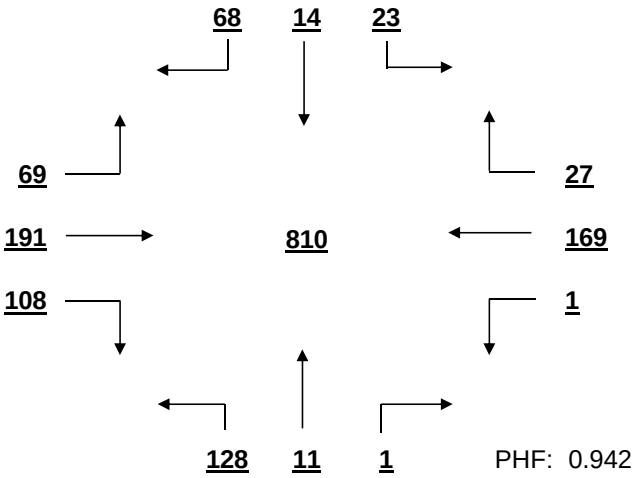

PHF: 0.942

OTHER HOUR VOLUME
FROM 7:00 TO 8:00

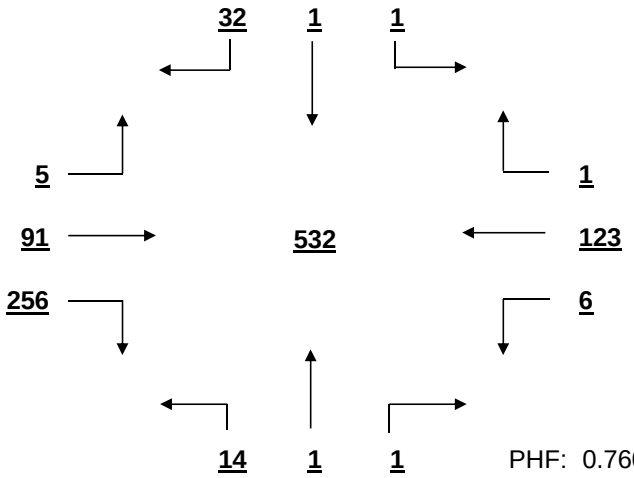

PHF: 0.760

SIGNAL WARRANT ANALYSIS

Woodcross Dr AT Fernandina Rd-Wendy's/Hotel Date: 12/1/2016

Minor Street Volume, percent of total = 75.0%
Percent of Left Turns from Minor Street = 7.0%
Percent of Right Turns from Minor Street = 24.4%
Percent of Minor Street Right Turns to Remove from Warrant Analysis = 0%
WARRANT BASIS = **100%**

Warrant No. 1 - Vehicular Volume is not met

Condition A - Minimum Vehicular Volume is not met

Average Major Street % of Warrant				Average Minor Street % of Warrant			
160.7	/	500	= 32%	301.0	/	150	= 201%

Hourly percent of warrant

	7:00 - 8:00	8:00 - 9:00	9:00 - 10:00	10:00 - 11:00	11:00 - 12:00	12:00 - 13:00	13:00 - 14:00	14:00 - 15:00	15:00 - 16:00	16:00 - 17:00	17:00 - 18:00	18:00 - 19:00
Major St.	10%	12%	15%	15%	26%	47%	39%	30%	34%	46%	66%	46%
Minor St.	235%	276%	143%	141%	201%	240%	203%	162%	205%	217%	211%	175%

Condition B - Interruption to Continuous Traffic is not met

Average Major Street % of Warrant				Average Minor Street % of Warrant			
160.7	/	750	= 21%	301.0	/	75	= 401%

Hourly percent of warrant

	7:00 - 8:00	8:00 - 9:00	9:00 - 10:00	10:00 - 11:00	11:00 - 12:00	12:00 - 13:00	13:00 - 14:00	14:00 - 15:00	15:00 - 16:00	16:00 - 17:00	17:00 - 18:00	18:00 - 19:00
Major St.	7%	8%	10%	10%	17%	31%	26%	20%	23%	31%	44%	31%
Minor St.	469%	552%	287%	281%	401%	480%	405%	324%	411%	433%	423%	349%

80% Combination of Conditions A & B is not met

Warrant No. 2 - Four Hour Vehicular Volume is not met

Hourly percent of warrant

	7:00 - 8:00	8:00 - 9:00	9:00 - 10:00	10:00 - 11:00	11:00 - 12:00	12:00 - 13:00	13:00 - 14:00	14:00 - 15:00	15:00 - 16:00	16:00 - 17:00	17:00 - 18:00	18:00 - 19:00
Minor St.	69%	82%	44%	43%	66%	91%	73%	54%	71%	82%	92%	66%

Warrant No. 3 - Peak Hour is not met

	Percent of warrant		Percent of warrant
Overall Peak Hour:	17:00 - 18:00	Higher Volume Side Street Peak Hour:	7:30 - 8:30
Minor St.	60%	Minor St.	71%

Warrant No. 4 - Pedestrian Volume. Pedestrian volume shown are minumum volumes assuming heavy major street traffic. If these volumes are met, warrant 4 requires further engineering analysis

Minimum 4 hour ped. volume crossing major street: 107

Minimum peak hour ped. volume crossing major street: 133

Number of pedestrians crossing major street

	7:00 - 8:00	8:00 - 9:00	9:00 - 10:00	10:00 - 11:00	11:00 - 12:00	12:00 - 13:00	13:00 - 14:00	14:00 - 15:00	15:00 - 16:00	16:00 - 17:00	17:00 - 18:00	18:00 - 19:00
Major St.	0	0	0	0	0	0	0	0	0	0	0	0

Warrant No. 7 - Crash Experience (Requires 3 criteria analysis by engineering)

Total Number: 0 From: 1/1/2005 to 1/1/2008

Accident Rate: 0.00 per million entering vehicles

Types of Accidents	No.	/	Avg.		No.	/	Avg.
Right Angle	0	/	0.0	Rear End	0	/	0.0
Lost Control	0	/	0.0	Side Swipe	0	/	0.0
Left Turn	0	/	0.0	Other	0	/	0.0

SOUTH CAROLINA DEPARTMENT OF TRANSPORTATION
DISTRICT 1
TRAFFIC ENGINEERING

County: Richland City: Columbia Date: 12/2/2016

Major Rt: Harbison Blvd * Not on State System Minor Rt: Saturn Pkwy * Not on State System

Day of Week: Friday Weather: Clear Office: Short Counts JMS

Type of Control: Signal Speed Limit (major st) 35

Direction of Minor Street: E-W Intersection ADT - 31850 (Calc)

Number of Lanes (major st)* 2 Number of Lanes (minor st)* 1

* Each Direction

INTERSECTION VOLUME SUMMARY

	From N Harbison Blvd				From S Harbison Blvd				From E Saturn Pkwy				From W Saturn Pkwy				Total	Total
	LT	STR	RT	TOT	LT	STR	RT	TOT	LT	STR	RT	TOT	LT	STR	RT	TOT	Vol	Peds
7:00 - 7:15	23	137	0	160	0	126	3	129	0	0	9	9	0	0	0	0	298	0
7:15 - 7:30	14	163	0	177	0	158	5	163	0	0	16	16	0	0	0	0	356	0
7:30 - 7:45	21	204	0	225	0	188	6	194	0	0	13	13	0	0	0	0	432	3
7:45 - 8:00	26	217	0	243	0	180	5	185	0	0	12	12	0	0	0	0	440	0
8:00 - 8:15	37	181	0	218	0	189	5	194	0	0	12	12	0	0	0	0	424	0
8:15 - 8:30	30	188	0	218	0	159	5	164	0	0	19	19	0	0	0	0	401	0
8:30 - 8:45	27	187	0	214	0	156	3	159	0	0	23	23	0	0	0	0	396	0
8:45 - 9:00	23	232	0	255	0	142	7	149	0	0	24	24	0	0	0	0	428	1
9:00 - 9:15	31	211	0	242	0	144	12	156	0	0	14	14	0	0	0	0	412	0
9:15 - 9:30	39	280	0	319	0	180	9	189	0	0	25	25	0	0	0	0	533	0
9:30 - 9:45	39	282	0	321	0	163	17	180	0	0	34	34	0	0	0	0	535	0
9:45 - 10:00	49	340	0	389	0	180	9	189	0	0	18	18	0	0	0	0	596	0
10:00 - 10:15	56	295	0	351	0	159	14	173	0	0	49	49	0	0	0	0	573	1
10:15 - 10:30	56	307	0	363	0	198	19	217	0	0	43	43	0	0	0	0	623	0
10:30 - 10:45	46	308	0	354	0	267	21	288	0	0	42	42	0	0	0	0	684	0
10:45 - 11:00	48	358	0	406	0	227	16	243	0	0	52	52	0	0	0	0	701	1
11:00 - 11:15	53	329	0	382	0	0	30	30	0	0	46	46	0	0	0	0	458	0
11:15 - 11:30	52	344	0	396	0	255	17	272	0	0	58	58	0	0	0	0	726	0
11:30 - 11:45	59	363	0	422	0	298	13	311	0	0	45	45	0	0	0	0	778	0
11:45 - 12:00	51	382	0	433	0	289	17	306	0	0	51	51	0	0	0	0	790	0
12:00 - 12:15	64	371	0	435	0	296	24	320	0	0	52	52	0	0	0	0	807	0
12:15 - 12:30	62	298	0	360	0	236	9	245	0	0	47	47	0	0	0	0	652	0
12:30 - 12:45	22	301	0	323	0	325	7	332	0	0	31	31	0	0	0	0	686	0
12:45 - 13:00	34	359	0	393	0	327	15	342	0	0	36	36	0	0	0	0	771	0
13:00 - 13:15	31	329	0	360	0	324	12	336	0	0	42	42	0	0	0	0	738	0
13:15 - 13:30	40	312	0	352	0	308	10	318	0	0	31	31	0	0	0	0	701	0
13:30 - 13:45	41	310	0	351	0	289	11	300	0	0	44	44	0	0	0	0	695	0
13:45 - 14:00	52	292	0	344	0	321	15	336	0	0	46	46	0	0	0	0	726	0
14:00 - 14:15	54	311	0	365	0	316	23	339	0	0	50	50	0	0	0	0	754	1
14:15 - 14:30	50	315	0	365	0	416	20	436	0	0	59	59	0	0	0	0	860	0
14:30 - 14:45	57	274	0	331	0	372	21	393	0	0	72	72	0	0	0	0	796	0
14:45 - 15:00	47	294	0	341	0	333	24	357	0	0	49	49	0	0	0	0	747	0
15:00 - 15:15	72	261	0	333	0	364	15	379	0	0	70	70	0	0	0	0	782	0
15:15 - 15:30	60	214	0	274	0	348	23	371	0	0	70	70	0	0	0	0	715	0
15:30 - 15:45	49	288	0	337	0	362	22	384	0	0	61	61	0	0	0	0	782	1
15:45 - 16:00	55	306	0	361	0	358	20	378	0	0	62	62	0	0	0	0	801	0
16:00 - 16:15	63	271	0	334	0	324	9	333	0	0	61	61	0	0	0	0	728	0
16:15 - 16:30	60	244	0	304	0	346	12	358	0	0	75	75	0	0	0	0	737	0
16:30 - 16:45	54	314	0	368	0	353	10	363	0	0	66	66	0	0	0	0	797	0
16:45 - 17:00	67	279	0	346	0	325	15	340	0	0	77	77	0	0	0	0	763	1
17:00 - 17:15	53	299	0	352	0	267	12	279	0	0	59	59	0	0	0	0	690	0
17:15 - 17:30	54	282	0	336	0	341	10	351	0	0	49	49	0	0	0	0	736	1
17:30 - 17:45	50	293	0	343	0	296	9	305	0	0	46	46	0	0	0	0	694	0
17:45 - 18:00	84	253	0	337	0	289	6	295	0	0	72	72	0	0	0	0	704	0
18:00 - 18:15	56	250	0	306	0	307	15	322	0	0	53	53	0	0	0	0	681	4
18:15 - 18:30	58	248	0	306	0	298	16	314	0	0	52	52	0	0	0	0	672	0
18:30 - 18:45	71	251	0	322	0	278	13	291	0	0	61	61	0	0	0	0	674	0
18:45 - 19:00	27	264	0	291	0	261	10	271	0	0	55	55	0	0	0	0	617	0
TOTAL	2267	13391	0	15658	0	12638	641	13279	0	0	2153	2153	0	0	0	0	31090	14
Trucks	19	39	0	58	0	41	2	43	0	0	15	15	0	0	0	0	116	0.4%
School Buses	4	35	0	39	0	35	0	35	0	0	4	4	0	0	0	0	78	0.3%

TOTAL AND PEAK HOUR VOLUME DIAGRAMS

Harbison Blvd AT Saturn Pkwy Date: 12/2/2016

12.0 HOUR TOTAL VOLUME
FROM 7:00 TO 15:00

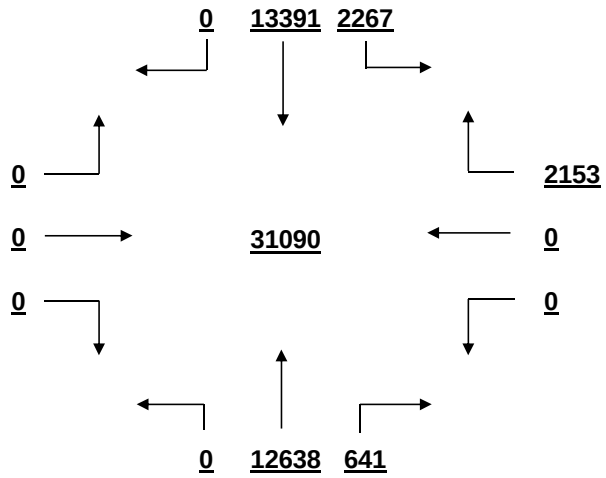

OVERALL PEAK HOUR VOLUME
FROM 14:15 TO 15:15

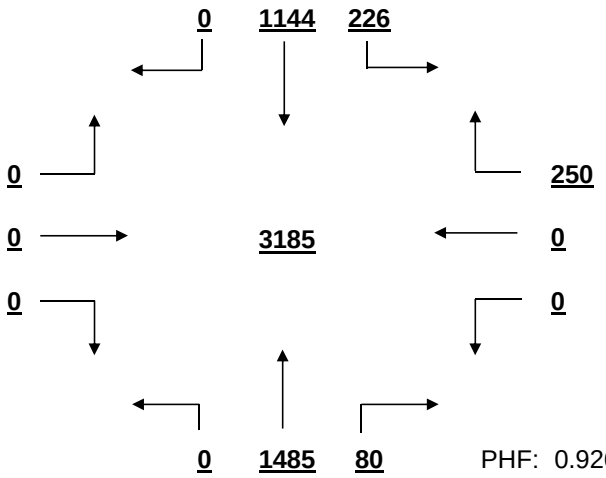

PHF: 0.926

AM PEAK HOUR VOLUME (0:00-10:45)
FROM 9:45 TO 10:45

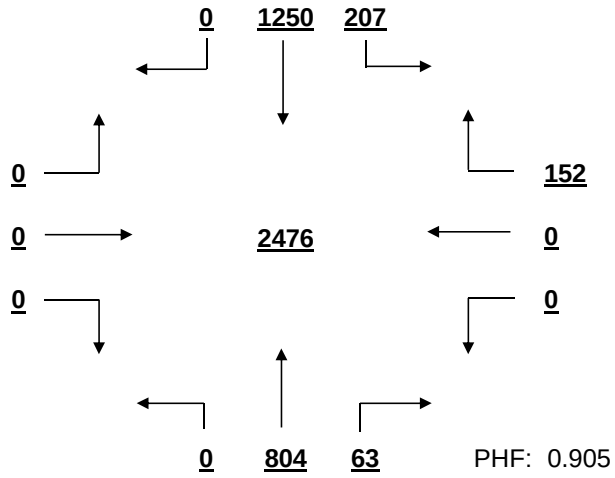

PHF: 0.905

PM PEAK HOUR VOLUME (14:15-23:45)
FROM 14:15 TO 15:15

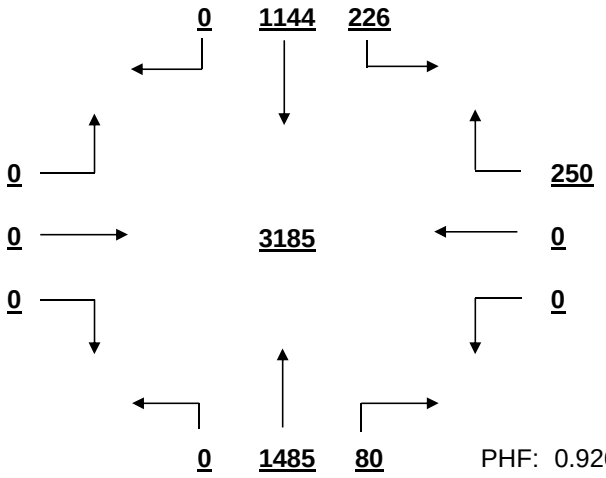

PHF: 0.926

MID-DAY PEAK HOUR VOLUME (11:00-14:00)
FROM 11:15 TO 12:15

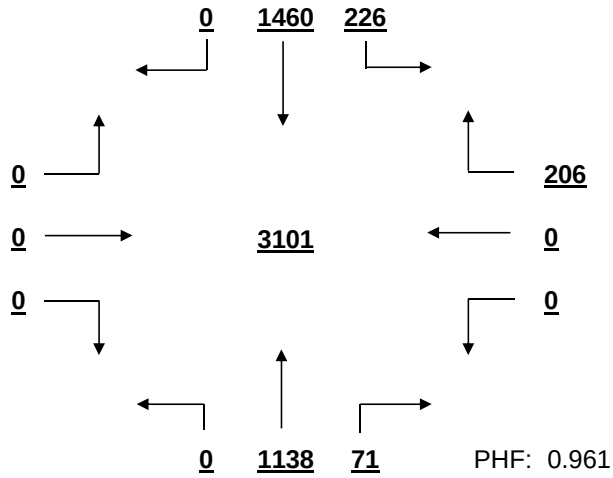

PHF: 0.961

OTHER HOUR VOLUME
FROM 7:00 TO 8:00

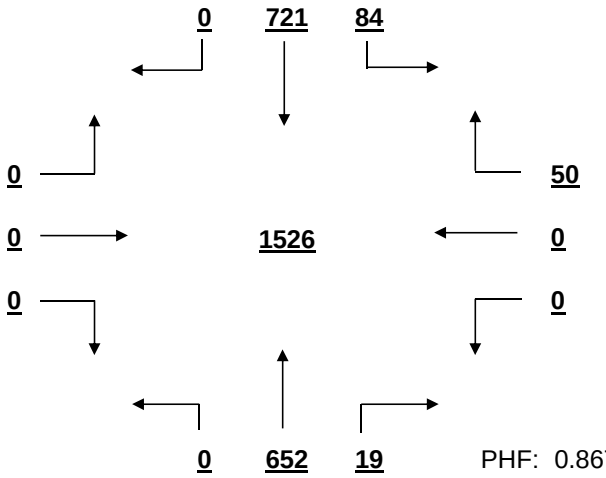

PHF: 0.867

SIGNAL WARRANT ANALYSIS

Harbison Blvd AT Saturn Pkwy Date: 12/2/2016

Minor Street Volume, percent of total = 6.9%
Percent of Left Turns from Minor Street = 0.0%
Percent of Right Turns from Minor Street = 100.0%
Percent of Minor Street Right Turns to Remove from Warrant Analysis = 0%
WARRANT BASIS = **100%**

Warrant No. 1 - Vehicular Volume is met

Condition A - Minimum Vehicular Volume is met

Average Major Street % of Warrant				Average Minor Street % of Warrant			
2411.4	/ 600	=	402%	179.4	/ 150	=	120%

Hourly percent of warrant

	7:00 - 8:00	8:00 - 9:00	9:00 - 10:00	10:00 - 11:00	11:00 - 12:00	12:00 - 13:00	13:00 - 14:00	14:00 - 15:00	15:00 - 16:00	16:00 - 17:00	17:00 - 18:00	18:00 - 19:00
Major St.	246%	262%	331%	399%	425%	458%	450%	488%	470%	458%	433%	404%
Minor St.	33%	52%	61%	124%	133%	111%	109%	153%	175%	186%	151%	147%

Condition B - Interruption to Continuous Traffic is met

Average Major Street % of Warrant				Average Minor Street % of Warrant			
2411.4	/ 900	=	268%	179.4	/ 75	=	239%

Hourly percent of warrant

	7:00 - 8:00	8:00 - 9:00	9:00 - 10:00	10:00 - 11:00	11:00 - 12:00	12:00 - 13:00	13:00 - 14:00	14:00 - 15:00	15:00 - 16:00	16:00 - 17:00	17:00 - 18:00	18:00 - 19:00
Major St.	164%	175%	221%	266%	284%	306%	300%	325%	313%	305%	289%	269%
Minor St.	67%	104%	121%	248%	267%	221%	217%	307%	351%	372%	301%	295%

80% Combination of Conditions A & B is met

Warrant No. 2 - Four Hour Vehicular Volume is met

Hourly percent of warrant

	7:00 - 8:00	8:00 - 9:00	9:00 - 10:00	10:00 - 11:00	11:00 - 12:00	12:00 - 13:00	13:00 - 14:00	14:00 - 15:00	15:00 - 16:00	16:00 - 17:00	17:00 - 18:00	18:00 - 19:00
Minor St.	63%	98%	114%	233%	250%	208%	204%	288%	329%	349%	283%	276%

Warrant No. 3 - Peak Hour is met

Percent of warrant			Percent of warrant	
Overall Peak Hour:	14:15 - 15:15	Higher Volume Side Street Peak Hour:	16:00 - 17:00	
Minor St.	250%	Minor St.	279%	

Warrant No. 4 - Pedestrian Volume. Pedestrian volume shown are minumum volumes assuming heavy major street traffic. If these volumes are met, warrant 4 requires further engineering analysis

Minimum 4 hour ped. volume crossing major street: 107

Minimum peak hour ped. volume crossing major street: 133

Number of pedestrians crossing major street

	7:00 - 8:00	8:00 - 9:00	9:00 - 10:00	10:00 - 11:00	11:00 - 12:00	12:00 - 13:00	13:00 - 14:00	14:00 - 15:00	15:00 - 16:00	16:00 - 17:00	17:00 - 18:00	18:00 - 19:00
Major St.	2	1	0	2	0	0	0	1	1	0	1	0

Warrant No. 7 - Crash Experience (Requires 3 criteria analysis by engineering)

Total Number: 0 From: 1/1/2005 to 1/1/2008

Accident Rate: 0.00 per million entering vehicles

Types of Accidents	No.	/	Avg.		No.	/	Avg.
Right Angle	0	/	0.0	Rear End	0	/	0.0
Lost Control	0	/	0.0	Side Swipe	0	/	0.0
Left Turn	0	/	0.0	Other	0	/	0.0

SOUTH CAROLINA DEPARTMENT OF TRANSPORTATION
DISTRICT 1
TRAFFIC ENGINEERING

County: Richland City: Columbia Date: 11/21/2016

Major Rt: Harbison Blvd * Not on State System Minor Rt: Columbiana Cir-Park Terrace Dr * Not on State System

Day of Week: Monday Weather: Clear Office: Short Counts JMS

Type of Control: Signal Speed Limit (major st) 35

Direction of Minor Street: E-W Intersection ADT - 39140 (Calc)

Number of Lanes (major st)* 2 Number of Lanes (minor st)* 2

* Each Direction

INTERSECTION VOLUME SUMMARY

	From N Harbison Blvd				From S Harbison Blvd				From E Columbiana Cir-Par				From W Columbiana Cir-Par				Total	Total
	LT	STR	RT	TOT	LT	STR	RT	TOT	LT	STR	RT	TOT	LT	STR	RT	TOT	Vol	Peds
7:00 - 7:15	24	93	12	129	2	110	14	126	13	0	2	15	1	1	1	3	273	0
7:15 - 7:30	13	115	16	144	3	143	20	166	31	3	8	42	0	1	0	1	353	0
7:30 - 7:45	21	137	15	173	5	169	39	213	26	2	9	37	9	3	1	13	436	7
7:45 - 8:00	21	141	15	177	6	182	41	229	26	9	16	51	7	5	1	13	470	1
8:00 - 8:15	15	148	15	178	1	135	35	171	13	3	8	24	1	3	1	5	378	2
8:15 - 8:30	28	116	19	163	3	158	53	214	28	4	11	43	3	2	5	10	430	1
8:30 - 8:45	33	114	22	169	7	125	30	162	21	9	11	41	4	3	3	10	382	8
8:45 - 9:00	26	136	47	209	5	122	33	160	41	7	20	68	7	6	4	17	454	5
9:00 - 9:15	23	136	28	187	9	121	35	165	41	13	17	71	9	3	8	20	443	0
9:15 - 9:30	29	160	0	189	6	128	39	173	30	5	9	44	15	5	11	31	437	0
9:30 - 9:45	16	152	0	168	11	162	39	212	41	12	26	79	7	4	10	21	480	1
9:45 - 10:00	28	171	100	299	9	121	52	182	45	22	23	90	24	6	13	43	614	1
10:00 - 10:15	24	168	14	206	20	162	29	211	47	17	39	103	15	8	5	28	548	0
10:15 - 10:30	24	154	50	228	15	152	48	215	58	24	24	106	27	11	14	52	601	1
10:30 - 10:45	30	175	75	280	17	170	45	232	58	14	27	99	36	12	15	63	674	0
10:45 - 11:00	31	215	86	332	17	171	49	237	54	19	31	104	35	16	19	70	743	4
11:00 - 11:15	35	210	114	359	19	0	36	55	53	24	41	118	30	11	20	61	593	0
11:15 - 11:30	41	223	93	357	29	193	33	255	50	21	40	111	34	26	22	82	805	2
11:30 - 11:45	33	197	86	316	24	229	40	293	82	27	29	138	48	10	28	86	833	0
11:45 - 12:00	43	253	111	407	21	201	41	263	78	27	37	142	44	18	19	81	893	5
12:00 - 12:15	10	277	109	396	16	202	58	276	79	21	47	147	72	21	19	112	931	2
12:15 - 12:30	29	254	129	412	24	247	55	326	74	33	41	148	58	21	22	101	987	4
12:30 - 12:45	39	238	103	380	22	234	43	299	76	31	48	155	76	18	43	137	971	1
12:45 - 13:00	51	221	124	396	21	248	37	306	69	34	55	158	79	30	36	145	1005	1
13:00 - 13:15	19	219	88	326	13	275	69	357	72	38	28	138	70	29	31	130	951	0
13:15 - 13:30	28	196	75	299	19	307	34	360	60	37	58	155	62	31	35	128	942	0
13:30 - 13:45	42	221	99	362	22	239	49	310	80	16	56	152	71	29	21	121	945	0
13:45 - 14:00	29	203	89	321	21	242	53	316	75	32	59	166	74	28	27	129	932	2
14:00 - 14:15	21	199	92	312	19	262	53	334	68	24	69	161	75	27	33	135	942	1
14:15 - 14:30	36	203	94	333	24	254	59	337	71	35	55	161	64	23	34	121	952	2
14:30 - 14:45	24	166	83	273	22	268	50	340	70	20	43	133	75	21	24	120	866	2
14:45 - 15:00	29	193	66	288	22	243	52	317	63	23	49	135	66	29	31	126	866	0
15:00 - 15:15	26	151	55	232	30	261	50	341	58	25	50	133	63	25	28	116	822	1
15:15 - 15:30	17	127	0	144	17	223	44	284	65	34	38	137	75	23	17	115	680	1
15:30 - 15:45	28	175	68	271	17	211	59	287	67	27	36	130	63	22	25	110	798	1
15:45 - 16:00	43	174	64	281	47	206	48	301	57	30	58	145	62	13	27	102	829	5
16:00 - 16:15	31	243	91	365	16	238	43	297	71	33	42	146	74	21	21	116	924	6
16:15 - 16:30	24	210	97	331	17	227	48	292	77	11	59	147	60	17	26	103	873	3
16:30 - 16:45	34	232	88	354	26	231	37	294	68	24	45	137	57	16	33	106	891	0
16:45 - 17:00	37	209	85	331	23	184	38	245	75	25	35	135	65	26	17	108	819	0
17:00 - 17:15	23	228	73	324	14	253	61	328	54	28	54	136	81	16	20	117	905	1
17:15 - 17:30	41	221	71	333	16	227	48	291	68	22	66	156	59	15	31	105	885	1
17:30 - 17:45	31	204	75	310	12	210	43	265	77	27	45	149	68	24	20	112	836	1
17:45 - 18:00	24	207	79	310	18	192	61	271	74	27	40	141	48	11	12	71	793	1
18:00 - 18:15	30	212	86	328	13	239	55	307	57	21	51	129	77	13	13	103	867	1
18:15 - 18:30	36	216	76	328	17	184	42	243	71	27	53	151	89	17	18	124	846	0
18:30 - 18:45	35	228	89	352	12	203	39	254	70	26	43	139	67	22	30	119	864	0
18:45 - 19:00	30	195	66	291	12	214	55	281	60	18	41	119	47	10	19	76	767	0
TOTAL	1385	9036	3232	13653	781	9478	2134	12393	2762	1011	1792	5565	2253	752	913	3918	35529	75
Trucks	17	97	24	138	3	79	8	90	18	7	16	41	15	4	6	25	294	0.8%
School Buses	0	18	0	18	16	0	4	20	5	0	12	17	1	1	0	2	57	0.2%

TOTAL AND PEAK HOUR VOLUME DIAGRAMS

Harbison Blvd AT Columbiana Cir-Park Terrace Dr Date: 11/21/2016

12.0 HOUR TOTAL VOLUME
FROM 7:00 TO 15:00

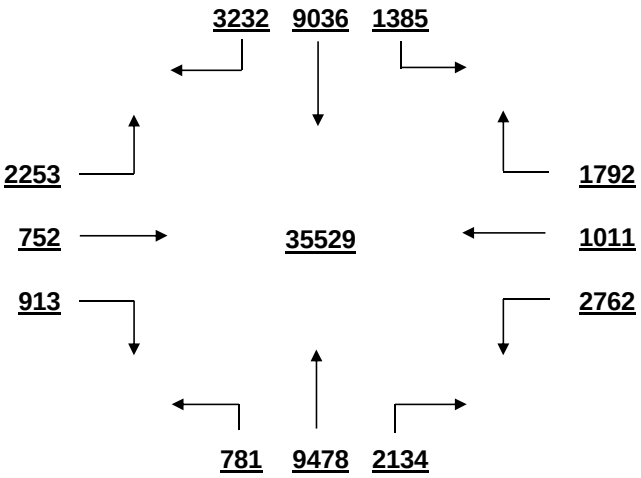

OVERALL PEAK HOUR VOLUME
FROM 12:15 TO 13:15

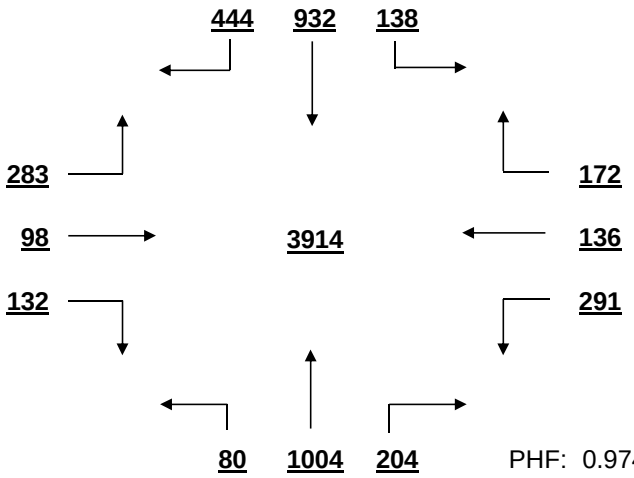

PHF: 0.974

AM PEAK HOUR VOLUME (0:00-10:45)
FROM 9:45 TO 10:45

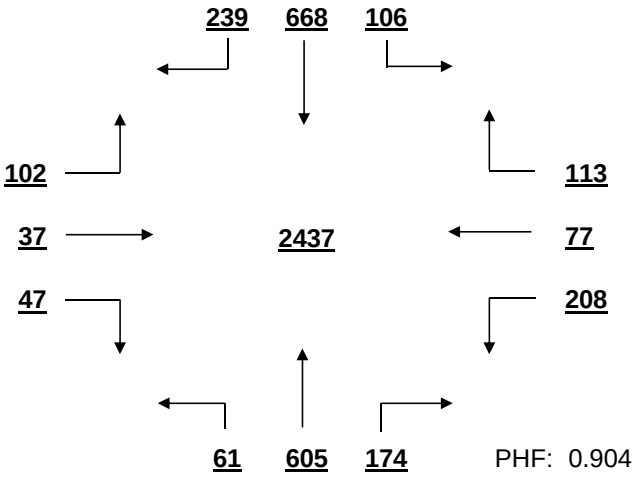

PHF: 0.904

PM PEAK HOUR VOLUME (14:15-23:45)
FROM 15:45 TO 16:45

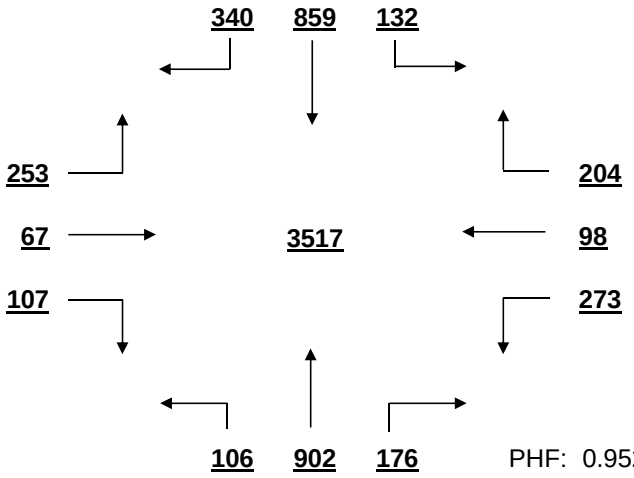

PHF: 0.952

MID-DAY PEAK HOUR VOLUME (11:00-14:00)
FROM 12:15 TO 13:15

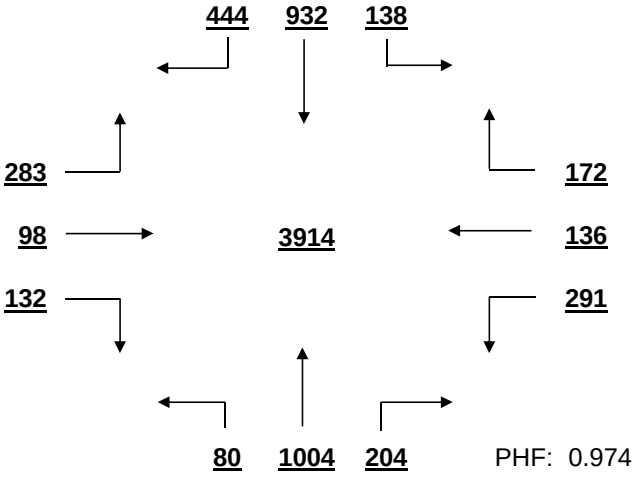

PHF: 0.974

OTHER HOUR VOLUME
FROM 7:00 TO 8:00

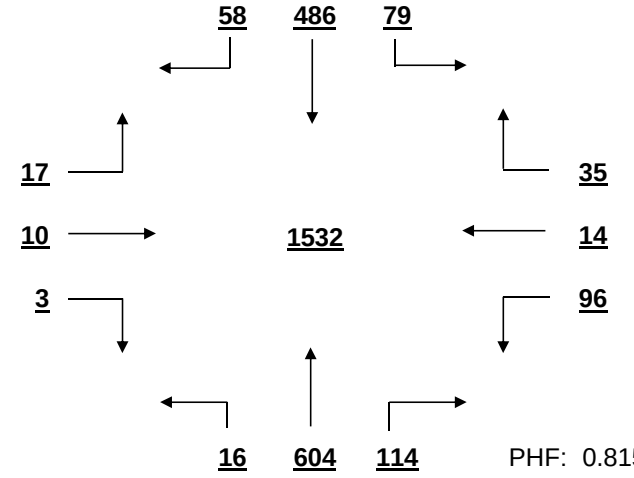

PHF: 0.815

SIGNAL WARRANT ANALYSIS

Harbison Blvd AT Columbiana Cir-Park Terrace Dr Date: 11/21/2016

Minor Street Volume, percent of total = 26.7%
Percent of Left Turns from Minor Street = 52.9%
Percent of Right Turns from Minor Street = 28.5%
Percent of Minor Street Right Turns to Remove from Warrant Analysis = 0%
WARRANT BASIS = **100%**

Warrant No. 1 - Vehicular Volume is met

Condition A - Minimum Vehicular Volume is met

Average Major Street % of Warrant				Average Minor Street % of Warrant			
2170.5	/ 600	=	362%	463.8	/ 200	=	232%

Hourly percent of warrant

	7:00 - 8:00	8:00 - 9:00	9:00 - 10:00	10:00 - 11:00	11:00 - 12:00	12:00 - 13:00	13:00 - 14:00	14:00 - 15:00	15:00 - 16:00	16:00 - 17:00	17:00 - 18:00	18:00 - 19:00
Major St.	226%	238%	263%	324%	384%	465%	442%	422%	357%	418%	405%	397%
Minor St.	73%	88%	142%	206%	255%	304%	306%	295%	273%	283%	291%	269%

Condition B - Interruption to Continuous Traffic is met

Average Major Street % of Warrant				Average Minor Street % of Warrant			
2170.5	/ 900	=	241%	463.8	/ 100	=	464%

Hourly percent of warrant

	7:00 - 8:00	8:00 - 9:00	9:00 - 10:00	10:00 - 11:00	11:00 - 12:00	12:00 - 13:00	13:00 - 14:00	14:00 - 15:00	15:00 - 16:00	16:00 - 17:00	17:00 - 18:00	18:00 - 19:00
Major St.	151%	158%	175%	216%	256%	310%	295%	282%	238%	279%	270%	265%
Minor St.	145%	176%	284%	412%	509%	608%	611%	590%	545%	565%	582%	538%

80% Combination of Conditions A & B is met

Warrant No. 2 - Four Hour Vehicular Volume is met

Hourly percent of warrant

	7:00 - 8:00	8:00 - 9:00	9:00 - 10:00	10:00 - 11:00	11:00 - 12:00	12:00 - 13:00	13:00 - 14:00	14:00 - 15:00	15:00 - 16:00	16:00 - 17:00	17:00 - 18:00	18:00 - 19:00
Minor St.	126%	153%	247%	358%	443%	529%	531%	513%	474%	491%	506%	468%

Warrant No. 3 - Peak Hour is met

Percent of warrant			Percent of warrant		
Overall Peak Hour:	12:15 - 13:15		Higher Volume Side Street Peak Hour:	13:30 - 14:30	
Minor St.	399%		Minor St.	427%	

Warrant No. 4 - Pedestrian Volume. Pedestrian volume shown are minumum volumes assuming heavy major street traffic. If these volumes are met, warrant 4 requires further engineering analysis

Minimum 4 hour ped. volume crossing major street: 107

Minimum peak hour ped. volume crossing major street: 133

Number of pedestrians crossing major street

	7:00 - 8:00	8:00 - 9:00	9:00 - 10:00	10:00 - 11:00	11:00 - 12:00	12:00 - 13:00	13:00 - 14:00	14:00 - 15:00	15:00 - 16:00	16:00 - 17:00	17:00 - 18:00	18:00 - 19:00
Major St.	4	9	2	5	6	8	1	5	3	4	4	1

Warrant No. 7 - Crash Experience (Requires 3 criteria analysis by engineering)

Total Number: 0 From: 1/1/2005 to 1/1/2008

Accident Rate: 0.00 per million entering vehicles

Types of Accidents	No.	/	Avg.		No.	/	Avg.
Right Angle	0	/	0.0	Rear End	0	/	0.0
Lost Control	0	/	0.0	Side Swipe	0	/	0.0
Left Turn	0	/	0.0	Other	0	/	0.0

SOUTH CAROLINA DEPARTMENT OF TRANSPORTATION
DISTRICT 1
TRAFFIC ENGINEERING

County: Richland City: Columbia Date: 11/22/2016

Major Rt: Harbison Blvd * Not on State System Minor Rt: Columbiana Dr-Chick Fil A * Not on State System

Day of Week: Tuesday Weather: Clear Office: Short Counts JMS

Type of Control: Signal Speed Limit (major st) 35

Direction of Minor Street: E-W Intersection ADT - 34400 (Calc)

Number of Lanes (major st)* 2 Number of Lanes (minor st)* 2

* Each Direction

INTERSECTION VOLUME SUMMARY

	From N Harbison Blvd				From S Harbison Blvd				From E Columbiana Dr-Chic				From W Columbiana Dr-Chic				Total	Total
	LT	STR	RT	TOT	LT	STR	RT	TOT	LT	STR	RT	TOT	LT	STR	RT	TOT	Vol	Peds
7:00 - 7:15	13	66	26	105	7	59	9	75	2	2	16	20	46	5	19	70	270	0
7:15 - 7:30	14	89	50	153	13	78	12	103	3	5	16	24	79	3	32	114	394	0
7:30 - 7:45	7	99	44	150	11	78	8	97	9	3	14	26	117	5	37	159	432	1
7:45 - 8:00	11	138	44	193	10	108	14	132	6	2	23	31	105	9	53	167	523	1
8:00 - 8:15	13	123	17	153	25	85	11	121	5	3	20	28	74	6	48	128	430	1
8:15 - 8:30	20	100	32	152	13	104	7	124	4	5	24	33	87	9	43	139	448	1
8:30 - 8:45	15	71	40	126	8	84	2	94	6	2	18	26	62	9	37	108	354	2
8:45 - 9:00	13	121	48	182	10	88	8	106	7	5	18	30	54	6	36	96	414	3
9:00 - 9:15	12	125	39	176	11	81	7	99	4	5	14	23	68	2	39	109	407	2
9:15 - 9:30	21	141	0	162	19	115	6	140	5	1	14	20	73	4	36	113	435	5
9:30 - 9:45	13	144	0	157	25	140	9	174	7	3	20	30	49	11	52	112	473	0
9:45 - 10:00	19	153	47	219	34	121	6	161	8	10	20	38	60	11	54	125	543	0
10:00 - 10:15	17	146	57	220	38	145	14	197	10	12	15	37	55	4	63	122	576	2
10:15 - 10:30	11	159	57	227	42	149	12	203	7	3	16	26	67	5	47	119	575	0
10:30 - 10:45	12	169	65	246	38	161	5	204	6	3	19	28	71	6	72	149	627	2
10:45 - 11:00	15	200	67	282	45	167	11	223	6	2	23	31	77	4	58	139	675	1
11:00 - 11:15	11	220	57	288	44	0	12	56	7	4	17	28	75	5	55	135	507	0
11:15 - 11:30	18	208	57	283	51	198	14	263	4	10	18	32	63	5	60	128	706	0
11:30 - 11:45	21	227	70	318	49	214	16	279	6	3	21	30	78	1	83	162	789	2
11:45 - 12:00	13	239	74	326	53	184	16	253	3	4	30	37	81	6	85	172	788	0
12:00 - 12:15	20	256	69	345	65	171	22	258	7	6	29	42	89	7	89	185	830	1
12:15 - 12:30	17	251	80	348	60	243	17	320	8	8	22	38	91	4	75	170	876	0
12:30 - 12:45	22	253	65	340	63	203	12	278	8	6	19	33	94	6	87	187	838	2
12:45 - 13:00	13	244	70	327	60	213	25	298	11	5	20	36	77	7	91	175	836	0
13:00 - 13:15	14	236	51	301	67	265	16	348	7	5	25	37	96	6	102	204	890	1
13:15 - 13:30	14	215	62	291	56	261	8	325	11	7	30	48	81	7	103	191	855	0
13:30 - 13:45	18	224	70	312	61	218	18	297	10	2	26	38	80	2	83	165	812	1
13:45 - 14:00	12	227	71	310	55	219	17	291	4	2	24	30	90	5	81	176	807	2
14:00 - 14:15	20	296	70	386	65	225	12	302	12	7	21	40	87	4	65	156	884	3
14:15 - 14:30	14	220	83	317	63	246	16	325	12	6	23	41	80	5	57	142	825	0
14:30 - 14:45	15	200	64	279	64	233	16	313	6	5	27	38	93	4	78	175	805	0
14:45 - 15:00	10	219	48	277	55	215	18	288	7	6	22	35	97	5	89	191	791	2
15:00 - 15:15	9	158	59	226	48	239	13	300	6	1	24	31	87	4	85	176	733	0
15:15 - 15:30	8	149	0	157	54	215	10	279	7	7	17	31	71	8	63	142	609	0
15:30 - 15:45	13	181	68	262	49	201	10	260	7	3	14	24	83	5	60	148	694	3
15:45 - 16:00	5	174	55	234	52	236	9	297	1	3	20	24	79	4	79	162	717	0
16:00 - 16:15	7	237	86	330	50	209	16	275	8	4	11	23	88	3	75	166	794	0
16:15 - 16:30	12	209	96	317	56	239	13	308	3	5	18	26	65	1	65	131	782	3
16:30 - 16:45	10	210	89	309	62	212	8	282	3	6	10	19	73	4	79	156	766	1
16:45 - 17:00	4	199	94	297	62	186	11	259	6	3	16	25	76	4	66	146	727	0
17:00 - 17:15	7	222	81	310	56	237	9	302	2	5	14	21	82	6	65	153	786	1
17:15 - 17:30	14	198	90	302	68	206	7	281	4	1	14	19	73	3	73	149	751	4
17:30 - 17:45	12	210	93	315	45	204	20	269	4	4	20	28	76	1	61	138	750	0
17:45 - 18:00	9	192	91	292	52	184	8	244	0	5	17	22	71	2	82	155	713	0
18:00 - 18:15	11	186	87	284	61	255	18	334	6	5	18	29	82	6	70	158	805	0
18:15 - 18:30	18	183	108	309	53	187	9	249	4	1	22	27	66	6	76	148	733	0
18:30 - 18:45	16	222	94	332	49	176	11	236	3	4	20	27	88	2	74	164	759	0
18:45 - 19:00	9	176	80	265	50	179	9	238	3	6	17	26	78	5	78	161	690	0
TOTAL	642	8885	2965	12492	2147	8436	577	11160	285	215	936	1436	3734	242	3160	7136	32224	47
Trucks	2	80	37	119	11	49	1	61	0	1	3	4	21	0	22	43	227	0.7%
School Buses	0	20	14	34	1	12	0	13	0	0	0	0	10	0	12	22	69	0.2%

TOTAL AND PEAK HOUR VOLUME DIAGRAMS

Harbison Blvd AT Columbiana Dr-Chick Fil A Date: 11/22/2016

12.0 HOUR TOTAL VOLUME
FROM 7:00 TO 15:00

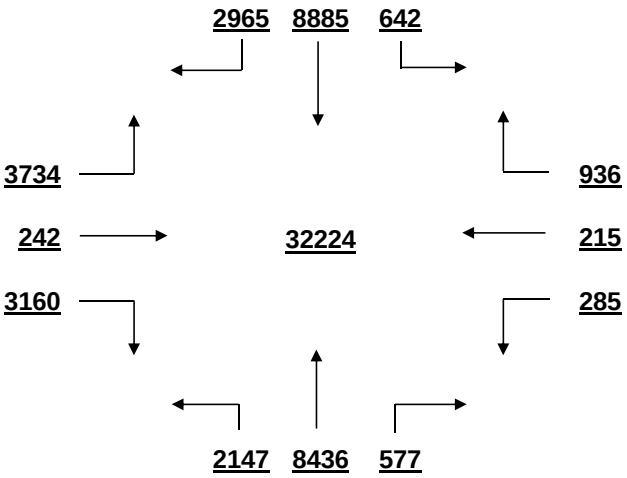

OVERALL PEAK HOUR VOLUME
FROM 12:15 TO 13:15

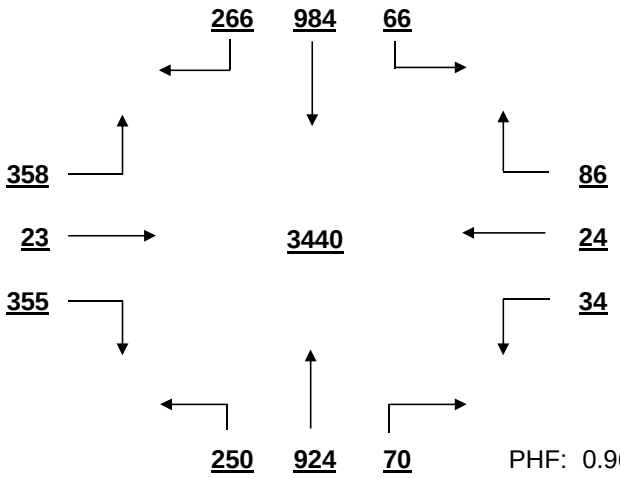

PHF: 0.966

AM PEAK HOUR VOLUME (0:00-10:45)
FROM 9:45 TO 10:45

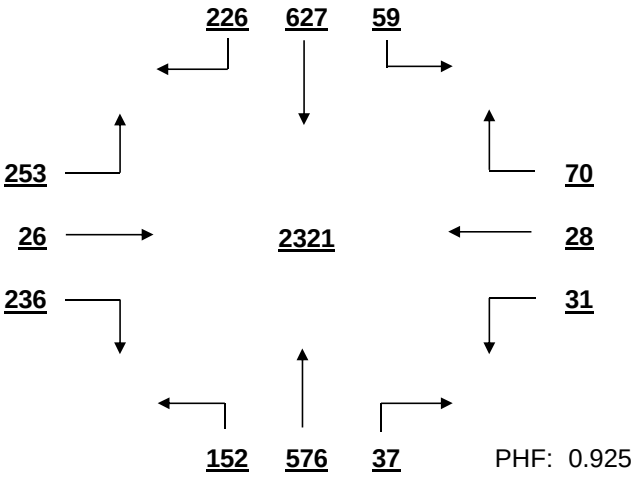

PHF: 0.925

PM PEAK HOUR VOLUME (14:15-23:45)
FROM 14:15 TO 15:15

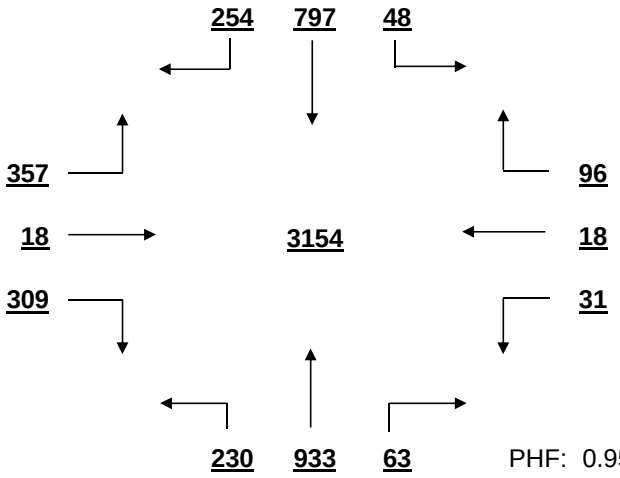

PHF: 0.956

MID-DAY PEAK HOUR VOLUME (11:00-14:00)
FROM 12:15 TO 13:15

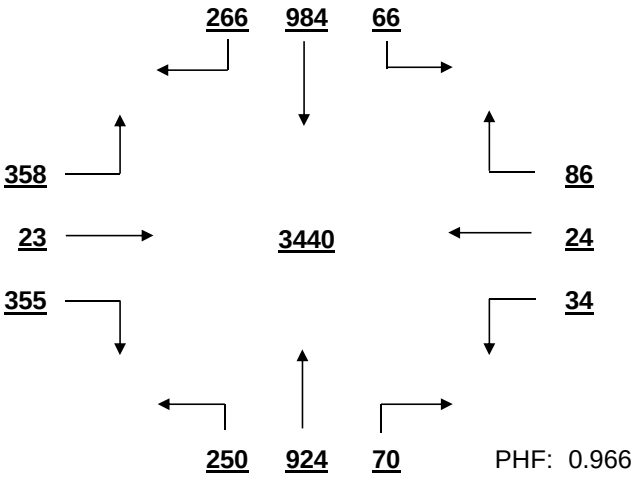

PHF: 0.966

OTHER HOUR VOLUME
FROM 7:00 TO 8:00

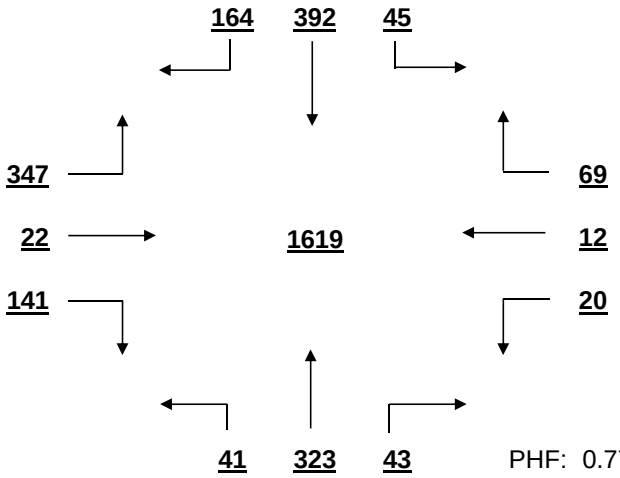

PHF: 0.774

SIGNAL WARRANT ANALYSIS

Harbison Blvd AT Columbiana Dr-Chick Fil A Date: 11/22/2016

Minor Street Volume, percent of total = 26.6%
Percent of Left Turns from Minor Street = 46.9%
Percent of Right Turns from Minor Street = 47.8%
Percent of Minor Street Right Turns to Remove from Warrant Analysis = 0%
WARRANT BASIS = **100%**

Warrant No. 1 - Vehicular Volume is met

Condition A - Minimum Vehicular Volume is met

Average Major Street % of Warrant				Average Minor Street % of Warrant			
1971.0	/ 600	=	329%	594.7	/ 200	=	297%

Hourly percent of warrant

	7:00 - 8:00	8:00 - 9:00	9:00 - 10:00	10:00 - 11:00	11:00 - 12:00	12:00 - 13:00	13:00 - 14:00	14:00 - 15:00	15:00 - 16:00	16:00 - 17:00	17:00 - 18:00	18:00 - 19:00
Major St.	168%	176%	215%	300%	344%	419%	413%	415%	336%	396%	386%	375%
Minor St.	255%	236%	230%	265%	299%	359%	368%	332%	314%	300%	298%	316%

Condition B - Interruption to Continuous Traffic is met

Average Major Street % of Warrant				Average Minor Street % of Warrant			
1971.0	/ 900	=	219%	594.7	/ 100	=	595%

Hourly percent of warrant

	7:00 - 8:00	8:00 - 9:00	9:00 - 10:00	10:00 - 11:00	11:00 - 12:00	12:00 - 13:00	13:00 - 14:00	14:00 - 15:00	15:00 - 16:00	16:00 - 17:00	17:00 - 18:00	18:00 - 19:00
Major St.	112%	118%	143%	200%	230%	279%	275%	276%	224%	264%	257%	250%
Minor St.	510%	471%	459%	529%	597%	717%	736%	664%	628%	599%	595%	631%

80% Combination of Conditions A & B is met

Warrant No. 2 - Four Hour Vehicular Volume is met

Hourly percent of warrant

	7:00 - 8:00	8:00 - 9:00	9:00 - 10:00	10:00 - 11:00	11:00 - 12:00	12:00 - 13:00	13:00 - 14:00	14:00 - 15:00	15:00 - 16:00	16:00 - 17:00	17:00 - 18:00	18:00 - 19:00
Minor St.	267%	271%	399%	460%	519%	623%	640%	577%	546%	521%	517%	549%

Warrant No. 3 - Peak Hour is met

	Percent of warrant		Percent of warrant
Overall Peak Hour:	12:15 - 13:15	Higher Volume Side Street Peak Hour:	12:30 - 13:30
Minor St.	491%	Minor St.	505%

Warrant No. 4 - Pedestrian Volume. Pedestrian volume shown are minumum volumes assuming heavy major street traffic. If these volumes are met, warrant 4 requires further engineering analysis

Minimum 4 hour ped. volume crossing major street: 107

Minimum peak hour ped. volume crossing major street: 133

Number of pedestrians crossing major street

	7:00 - 8:00	8:00 - 9:00	9:00 - 10:00	10:00 - 11:00	11:00 - 12:00	12:00 - 13:00	13:00 - 14:00	14:00 - 15:00	15:00 - 16:00	16:00 - 17:00	17:00 - 18:00	18:00 - 19:00
Major St.	0	1	2	0	0	2	0	0	0	0	0	0

Warrant No. 7 - Crash Experience (Requires 3 criteria analysis by engineering)

Total Number: 0 From: 1/1/2005 to 1/1/2008

Accident Rate: 0.00 per million entering vehicles

Types of Accidents	No.	/	Avg.		No.	/	Avg.
Right Angle	0	/	0.0	Rear End	0	/	0.0
Lost Control	0	/	0.0	Side Swipe	0	/	0.0
Left Turn	0	/	0.0	Other	0	/	0.0

SOUTH CAROLINA DEPARTMENT OF TRANSPORTATION
DISTRICT 1
TRAFFIC ENGINEERING

County: Richland City: Columbia Date: 11/21/2016

Major Rt: Harbison Blvd * Not on State System Minor Rt: Rooms 2 Go-Pier 1 DW's * Not on State System

Day of Week: Monday Weather: Clear Office: Short Counts JMS

Type of Control: Signal Speed Limit (major st) 35

Direction of Minor Street: E-W Intersection ADT - 28160 (Calc)

Number of Lanes (major st)* 2 Number of Lanes (minor st)* 1

* Each Direction

INTERSECTION VOLUME SUMMARY

	From N Harbison Blvd				From S Harbison Blvd				From E Rooms 2 Go-Pier 1				From W Rooms 2 Go-Pier 1				Total	Total
	LT	STR	RT	TOT	LT	STR	RT	TOT	LT	STR	RT	TOT	LT	STR	RT	TOT	Vol	Peds
7:00 - 7:15	1	83	0	84	0	72	2	74	3	0	0	3	0	0	0	0	161	0
7:15 - 7:30	3	107	0	110	0	89	4	93	0	0	1	1	0	0	1	1	205	0
7:30 - 7:45	2	128	1	131	0	90	4	94	1	0	1	2	0	0	0	0	227	0
7:45 - 8:00	2	159	1	162	2	118	9	129	2	0	2	4	0	0	1	1	296	0
8:00 - 8:15	1	143	1	145	4	105	3	112	3	0	6	9	0	0	0	0	266	0
8:15 - 8:30	3	120	0	123	0	104	1	105	2	0	3	5	0	0	0	0	233	0
8:30 - 8:45	1	103	0	104	1	79	6	86	3	0	1	4	0	0	1	1	195	0
8:45 - 9:00	7	123	1	131	0	101	10	111	1	0	1	2	0	0	0	0	244	0
9:00 - 9:15	9	140	3	152	7	88	16	111	8	0	3	11	0	0	2	2	276	0
9:15 - 9:30	17	130	0	147	3	111	24	138	8	2	11	21	2	1	1	4	310	0
9:30 - 9:45	11	167	0	178	4	139	18	161	11	2	11	24	3	1	4	8	371	0
9:45 - 10:00	13	159	2	174	7	129	16	152	7	2	10	19	2	1	3	6	351	0
10:00 - 10:15	23	162	1	186	8	150	18	176	11	0	17	28	3	0	1	4	394	0
10:15 - 10:30	25	150	2	177	8	177	25	210	18	5	13	36	3	3	4	10	433	0
10:30 - 10:45	23	171	6	200	10	152	29	191	18	1	19	38	5	1	8	14	443	0
10:45 - 11:00	25	199	2	226	6	184	32	222	25	2	17	44	5	1	10	16	508	0
11:00 - 11:15	31	197	5	233	7	0	42	49	25	2	15	42	5	2	8	15	339	0
11:15 - 11:30	37	186	2	225	11	214	30	255	24	5	21	50	9	5	10	24	554	0
11:30 - 11:45	36	223	3	262	18	208	36	262	35	1	30	66	3	4	7	14	604	0
11:45 - 12:00	48	236	1	285	23	193	31	247	27	4	29	60	1	4	11	16	608	0
12:00 - 12:15	50	258	4	312	10	212	35	257	26	5	29	60	3	2	20	25	654	0
12:15 - 12:30	53	264	6	323	20	209	43	272	26	3	46	75	9	3	15	27	697	0
12:30 - 12:45	36	244	0	280	19	233	42	294	33	3	35	71	13	4	20	37	682	0
12:45 - 13:00	56	248	2	306	16	219	49	284	42	7	46	95	7	1	24	32	717	0
13:00 - 13:15	48	265	4	317	12	223	31	266	38	8	47	93	12	1	26	39	715	0
13:15 - 13:30	47	251	5	303	13	221	39	273	33	4	62	99	13	4	10	27	702	0
13:30 - 13:45	37	237	4	278	15	237	29	281	36	4	44	84	5	4	18	27	670	1
13:45 - 14:00	32	229	9	270	12	176	41	229	35	6	38	79	10	3	16	29	607	0
14:00 - 14:15	38	202	3	243	17	218	35	270	30	7	40	77	5	3	27	35	625	0
14:15 - 14:30	36	212	6	254	16	194	33	243	32	3	53	88	9	4	19	32	617	0
14:30 - 14:45	26	206	4	236	17	224	28	269	24	1	42	67	7	1	14	22	594	0
14:45 - 15:00	31	259	0	290	13	205	32	250	24	1	36	61	7	2	14	23	624	0
15:00 - 15:15	15	203	4	222	19	211	35	265	32	3	23	58	5	0	13	18	563	0
15:15 - 15:30	24	156	0	180	10	202	22	234	20	2	36	58	9	3	5	17	489	0
15:30 - 15:45	27	197	1	225	15	201	19	235	21	7	32	60	6	0	12	18	538	1
15:45 - 16:00	35	195	2	232	13	205	25	243	19	1	38	58	6	4	14	24	557	0
16:00 - 16:15	30	228	4	262	14	207	33	254	27	1	26	54	9	5	5	19	589	0
16:15 - 16:30	30	218	1	249	14	204	37	255	18	3	42	63	5	4	13	22	589	0
16:30 - 16:45	26	216	4	246	6	218	27	251	27	4	33	64	3	2	12	17	578	0
16:45 - 17:00	19	219	1	239	14	184	28	226	37	1	30	68	6	2	10	18	551	1
17:00 - 17:15	21	224	1	246	6	226	33	265	26	2	26	54	7	2	10	19	584	0
17:15 - 17:30	24	222	3	249	8	203	38	249	34	1	25	60	6	1	8	15	573	0
17:30 - 17:45	30	204	4	238	13	199	33	245	23	3	31	57	11	1	7	19	559	0
17:45 - 18:00	29	215	1	245	12	185	35	232	26	0	37	63	3	1	6	10	550	0
18:00 - 18:15	28	198	4	230	5	228	38	271	20	1	30	51	5	4	5	14	566	0
18:15 - 18:30	18	190	3	211	12	184	17	213	31	2	17	50	7	2	8	17	491	0
18:30 - 18:45	45	220	4	269	11	159	42	212	19	5	38	62	4	2	9	15	558	0
18:45 - 19:00	25	178	2	205	9	152	30	191	28	0	33	61	5	0	5	10	467	0
TOTAL	1234	9244	117	10595	480	8242	1285	10007	1019	114	1226	2359	238	88	437	763	23724	3
Trucks	9	83	1	93	2	115	4	121	5	2	3	10	0	0	0	0	224	0.9%
School Buses	1	32	0	33	0	11	0	11	0	0	0	0	0	0	0	0	44	0.2%

TOTAL AND PEAK HOUR VOLUME DIAGRAMS

Harbison Blvd AT Rooms 2 Go-Pier 1 DW's Date: 11/21/2016

12.0 HOUR TOTAL VOLUME
FROM 7:00 TO 15:00

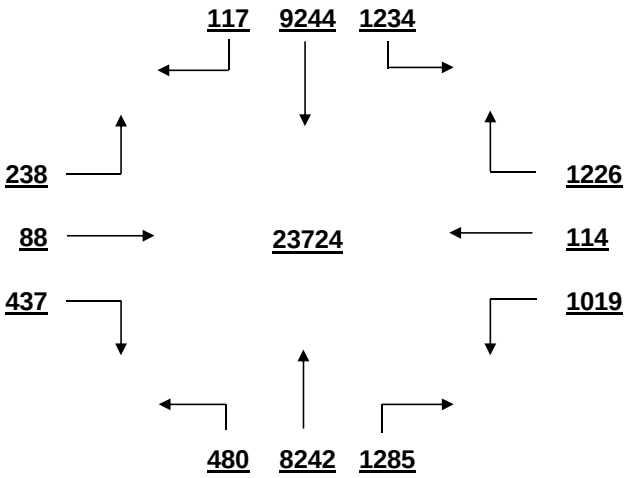

OVERALL PEAK HOUR VOLUME
FROM 12:30 TO 13:30

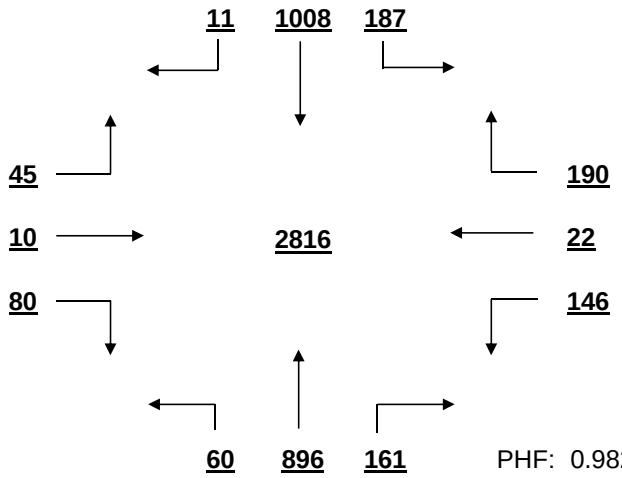

PHF: 0.982

AM PEAK HOUR VOLUME (0:00-10:45)
FROM 9:45 TO 10:45

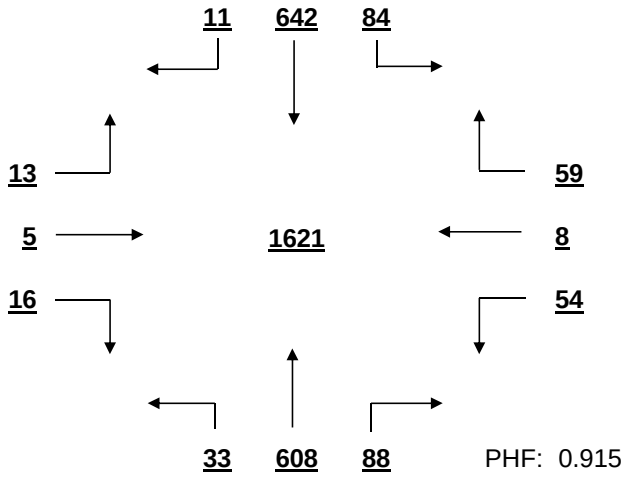

PHF: 0.915

PM PEAK HOUR VOLUME (14:15-23:45)
FROM 14:15 TO 15:15

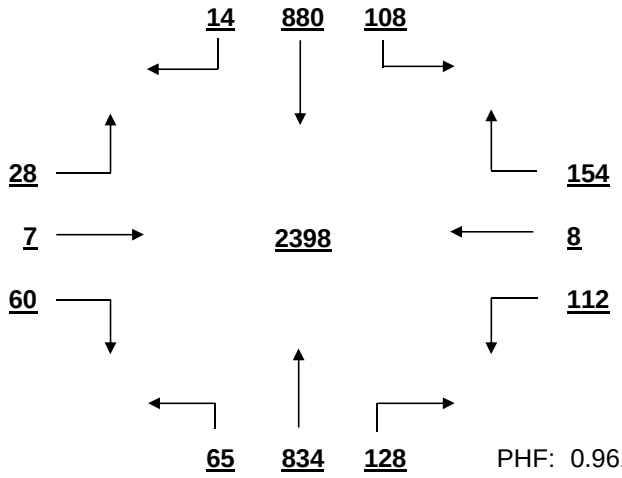

PHF: 0.961

MID-DAY PEAK HOUR VOLUME (11:00-14:00)
FROM 12:30 TO 13:30

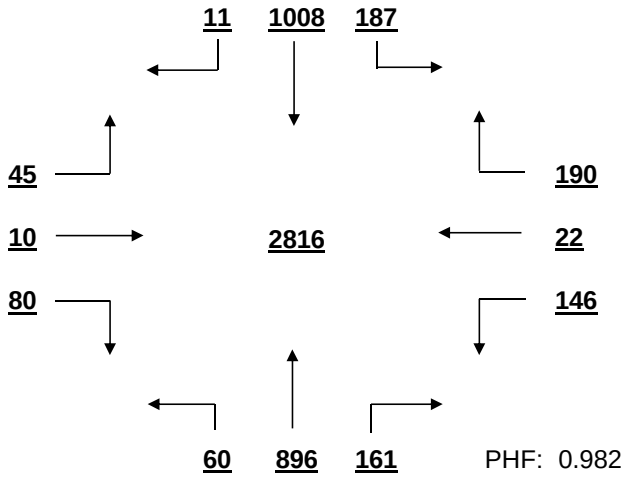

PHF: 0.982

OTHER HOUR VOLUME
FROM 7:00 TO 8:00

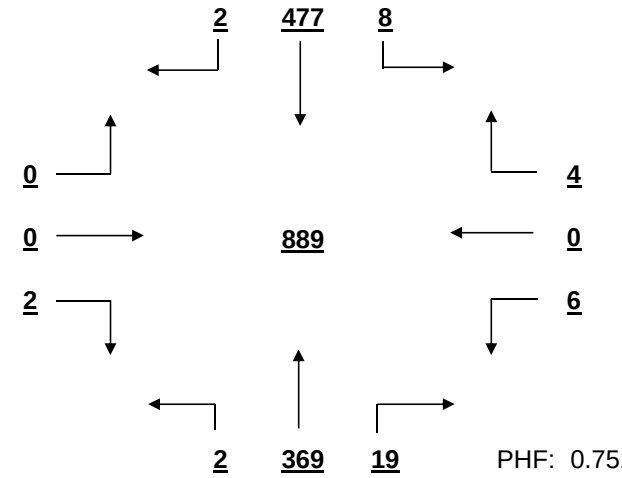

PHF: 0.751

SIGNAL WARRANT ANALYSIS

Harbison Blvd AT Rooms 2 Go-Pier 1 DW's Date: 11/21/2016

Minor Street Volume, percent of total = 13.2%
Percent of Left Turns from Minor Street = 40.3%
Percent of Right Turns from Minor Street = 53.3%
Percent of Minor Street Right Turns to Remove from Warrant Analysis = 0%
WARRANT BASIS = **100%**

Warrant No. 1 - Vehicular Volume is met

Condition A - Minimum Vehicular Volume is met

Average Major Street % of Warrant				Average Minor Street % of Warrant			
1716.8	/ 600	=	286%	196.6	/ 150	=	131%

Hourly percent of warrant

	7:00 - 8:00	8:00 - 9:00	9:00 - 10:00	10:00 - 11:00	11:00 - 12:00	12:00 - 13:00	13:00 - 14:00	14:00 - 15:00	15:00 - 16:00	16:00 - 17:00	17:00 - 18:00	18:00 - 19:00
Major St.	146%	153%	202%	265%	303%	388%	370%	343%	306%	330%	328%	300%
Minor St.	7%	13%	50%	97%	145%	201%	237%	195%	156%	166%	156%	149%

Condition B - Interruption to Continuous Traffic is met

Average Major Street % of Warrant				Average Minor Street % of Warrant			
1716.8	/ 900	=	191%	196.6	/ 75	=	262%

Hourly percent of warrant

	7:00 - 8:00	8:00 - 9:00	9:00 - 10:00	10:00 - 11:00	11:00 - 12:00	12:00 - 13:00	13:00 - 14:00	14:00 - 15:00	15:00 - 16:00	16:00 - 17:00	17:00 - 18:00	18:00 - 19:00
Major St.	97%	102%	135%	176%	202%	259%	246%	228%	204%	220%	219%	200%
Minor St.	13%	27%	100%	195%	291%	401%	473%	391%	312%	332%	312%	299%

80% Combination of Conditions A & B is met

Warrant No. 2 - Four Hour Vehicular Volume is met

Hourly percent of warrant

	7:00 - 8:00	8:00 - 9:00	9:00 - 10:00	10:00 - 11:00	11:00 - 12:00	12:00 - 13:00	13:00 - 14:00	14:00 - 15:00	15:00 - 16:00	16:00 - 17:00	17:00 - 18:00	18:00 - 19:00
Minor St.	6%	12%	74%	183%	273%	376%	444%	366%	293%	311%	293%	280%

Warrant No. 3 - Peak Hour is met

Percent of warrant			Percent of warrant		
Overall Peak Hour: 12:30 - 13:30			Higher Volume Side Street Peak Hour: 12:45 - 13:45		
Minor St.	358%		Minor St.	371%	

Warrant No. 4 - Pedestrian Volume. Pedestrian volume shown are minumum volumes assuming heavy major street traffic. If these volumes are met, warrant 4 requires further engineering analysis

Minimum 4 hour ped. volume crossing major street: 107

Minimum peak hour ped. volume crossing major street: 133

Number of pedestrians crossing major street

	7:00 - 8:00	8:00 - 9:00	9:00 - 10:00	10:00 - 11:00	11:00 - 12:00	12:00 - 13:00	13:00 - 14:00	14:00 - 15:00	15:00 - 16:00	16:00 - 17:00	17:00 - 18:00	18:00 - 19:00
Major St.	0	0	0	0	0	0	0	0	0	0	0	0

Warrant No. 7 - Crash Experience (Requires 3 criteria analysis by engineering)

Total Number: 0 From: 1/1/2005 to 1/1/2008

Accident Rate: 0.00 per million entering vehicles

Types of Accidents	No.	/	Avg.		No.	/	Avg.
Right Angle	0	/	0.0	Rear End	0	/	0.0
Lost Control	0	/	0.0	Side Swipe	0	/	0.0
Left Turn	0	/	0.0	Other	0	/	0.0

SOUTH CAROLINA DEPARTMENT OF TRANSPORTATION
DISTRICT 1
TRAFFIC ENGINEERING

County: Richland City: Columbia Date: 11/21/2016

Major Rt: Harbison Blvd * Not on State System Minor Rt: Bower Pkwy-Shopping Center * Not on State System

Day of Week: Monday Weather: Clear Office: Short Counts JMS

Type of Control: Signal Speed Limit (major st) 35

Direction of Minor Street: E-W Intersection ADT - 28380 (Calc)

Number of Lanes (major st)* 2 Number of Lanes (minor st)* 2

* Each Direction

INTERSECTION VOLUME SUMMARY

	From N Harbison Blvd				From S Harbison Blvd				From E Bower Pkwy-Shoppin				From W Bower Pkwy-Shoppin				Total	Total
	LT	STR	RT	TOT	LT	STR	RT	TOT	LT	STR	RT	TOT	LT	STR	RT	TOT	Vol	Peds
7:00 - 7:15	17	75	0	92	0	63	15	78	10	0	8	18	0	0	0	0	188	0
7:15 - 7:30	11	89	0	100	0	82	23	105	6	0	7	13	0	0	0	0	218	0
7:30 - 7:45	16	112	0	128	0	92	27	119	9	1	6	16	0	0	0	0	263	0
7:45 - 8:00	18	125	0	143	1	107	41	149	26	0	18	44	0	0	1	1	337	0
8:00 - 8:15	17	119	0	136	0	96	29	125	14	0	6	20	0	0	1	1	282	0
8:15 - 8:30	22	92	0	114	0	92	23	115	12	0	10	22	0	0	0	0	251	0
8:30 - 8:45	23	76	0	99	2	75	33	110	26	1	13	40	0	0	0	0	249	0
8:45 - 9:00	16	102	0	118	0	82	32	114	20	1	16	37	0	0	0	0	269	0
9:00 - 9:15	35	88	3	126	0	103	24	127	22	0	17	39	1	0	0	1	293	0
9:15 - 9:30	32	94	0	126	4	104	25	133	22	0	19	41	0	0	0	0	300	0
9:30 - 9:45	37	104	0	141	0	126	41	167	19	0	27	46	4	0	1	5	359	0
9:45 - 10:00	40	114	1	155	0	117	47	164	19	2	26	47	3	1	1	5	371	0
10:00 - 10:15	28	119	3	150	2	129	37	168	32	1	35	68	3	1	1	5	391	0
10:15 - 10:30	45	113	3	161	0	153	48	201	31	4	46	81	5	1	3	9	452	0
10:30 - 10:45	47	132	4	183	3	136	46	185	65	1	46	112	3	1	1	5	485	0
10:45 - 11:00	65	154	1	220	0	158	46	204	38	0	52	90	1	2	0	3	517	0
11:00 - 11:15	60	139	3	202	0	0	37	37	39	0	50	89	4	1	2	7	335	0
11:15 - 11:30	57	157	1	215	1	177	48	226	46	2	59	107	6	1	2	9	557	0
11:30 - 11:45	65	174	4	243	3	169	50	222	70	4	63	137	4	3	0	7	609	0
11:45 - 12:00	71	196	4	271	0	167	42	209	66	0	69	135	3	0	2	5	620	0
12:00 - 12:15	78	215	1	294	1	202	59	262	49	15	52	116	3	3	0	6	678	0
12:15 - 12:30	68	212	2	282	0	180	69	249	72	6	66	144	2	3	2	7	682	1
12:30 - 12:45	85	193	4	282	2	204	74	280	72	1	90	163	3	0	3	6	731	0
12:45 - 13:00	87	218	5	310	1	193	61	255	60	2	71	133	8	0	0	8	706	0
13:00 - 13:15	93	214	4	311	1	170	52	223	80	3	90	173	4	3	5	12	719	0
13:15 - 13:30	66	201	2	269	2	182	45	229	61	2	74	137	7	0	0	7	642	0
13:30 - 13:45	64	204	9	277	0	198	59	257	76	2	63	141	2	0	0	2	677	2
13:45 - 14:00	62	220	5	287	1	169	57	227	83	0	50	133	6	0	0	6	653	0
14:00 - 14:15	51	196	5	252	0	189	55	244	85	2	59	146	7	1	0	8	650	0
14:15 - 14:30	65	183	3	251	0	166	53	219	56	1	62	119	1	1	2	4	593	0
14:30 - 14:45	63	166	5	234	2	165	42	209	76	0	58	134	3	1	2	6	583	0
14:45 - 15:00	59	192	6	257	3	179	46	228	56	1	62	119	4	1	3	8	612	0
15:00 - 15:15	76	194	1	271	2	161	49	212	48	1	71	120	5	0	3	8	611	0
15:15 - 15:30	38	148	0	186	2	172	43	217	78	3	52	133	7	0	1	8	544	0
15:30 - 15:45	51	175	2	228	0	159	31	190	60	2	49	111	3	2	5	10	539	0
15:45 - 16:00	54	155	2	211	2	170	54	226	78	1	63	142	4	4	1	9	588	0
16:00 - 16:15	56	187	4	247	0	173	42	215	74	2	47	123	4	2	3	9	594	3
16:15 - 16:30	63	164	1	228	2	172	50	224	93	2	52	147	4	0	6	10	609	2
16:30 - 16:45	64	217	1	282	1	173	46	220	68	3	61	132	2	2	3	7	641	1
16:45 - 17:00	52	238	6	296	0	167	48	215	56	1	43	100	1	0	2	3	614	2
17:00 - 17:15	51	239	4	294	2	186	55	243	86	0	59	145	6	0	1	7	689	0
17:15 - 17:30	60	219	1	280	1	174	44	219	65	4	62	131	3	2	3	8	638	0
17:30 - 17:45	57	157	2	216	1	164	51	216	72	0	56	128	4	1	2	7	567	0
17:45 - 18:00	78	189	1	268	1	172	61	234	64	2	42	108	3	1	2	6	616	0
18:00 - 18:15	50	181	5	236	2	176	53	231	77	0	59	136	1	0	3	4	607	0
18:15 - 18:30	51	214	1	266	2	145	47	194	64	0	62	126	3	2	0	5	591	0
18:30 - 18:45	61	213	2	276	0	149	44	193	77	2	38	117	4	3	1	8	594	0
18:45 - 19:00	55	192	0	247	0	110	39	149	75	1	61	137	2	2	0	4	537	0
TOTAL	2480	7870	111	10461	47	7048	2143	9238	2553	76	2267	4896	143	45	68	256	24851	11
Trucks	28	45	0	73	0	36	5	41	16	0	22	38	0	0	2	2	154	0.6%
School Buses	0	30	0	30	0	10	4	14	14	0	3	17	0	0	0	0	61	0.2%

TOTAL AND PEAK HOUR VOLUME DIAGRAMS

Harbison Blvd AT Bower Pkwy-Shopping Center Date: 11/21/2016

12.0 HOUR TOTAL VOLUME
FROM 7:00 TO 15:00

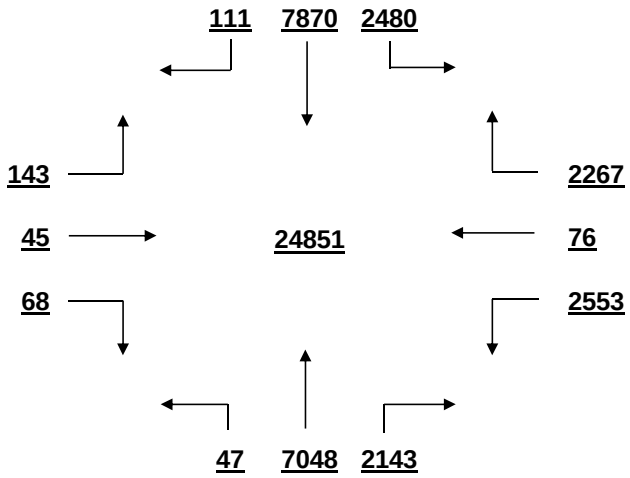

OVERALL PEAK HOUR VOLUME
FROM 12:15 TO 13:15

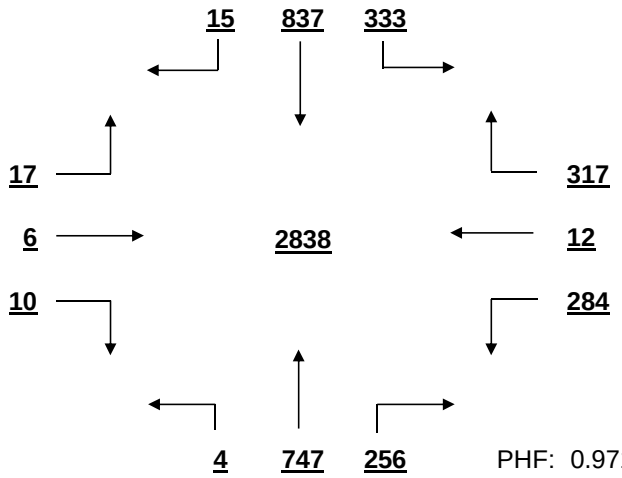

PHF: 0.971

AM PEAK HOUR VOLUME (0:00-10:45)
FROM 9:45 TO 10:45

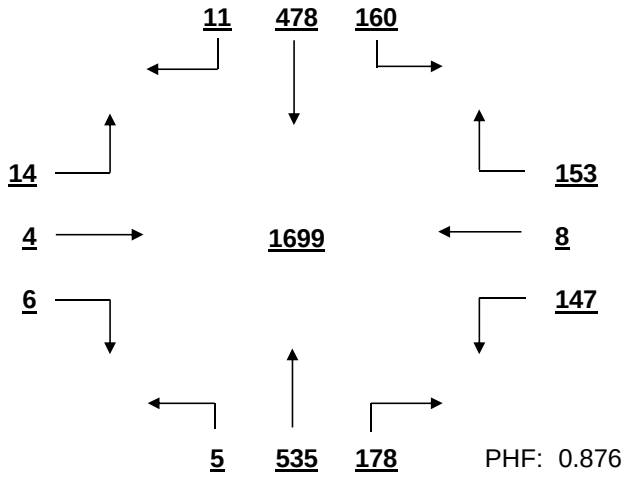

PHF: 0.876

PM PEAK HOUR VOLUME (14:15-23:45)
FROM 16:30 TO 17:30

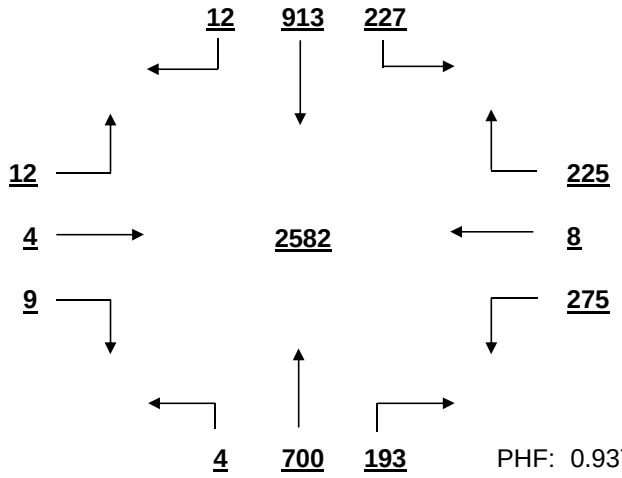

PHF: 0.937

MID-DAY PEAK HOUR VOLUME (11:00-14:00)
FROM 12:15 TO 13:15

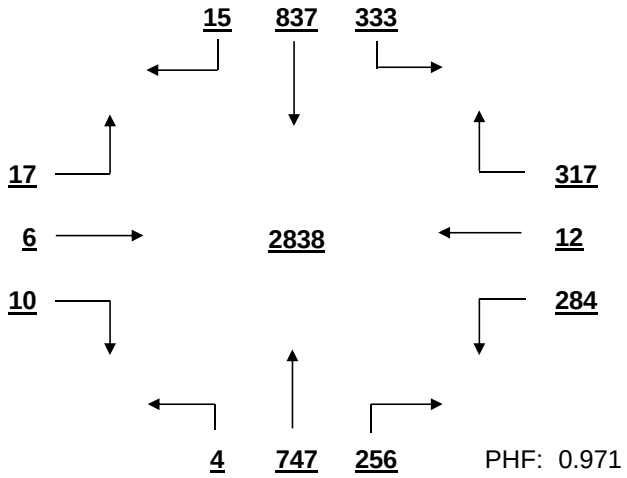

PHF: 0.971

OTHER HOUR VOLUME
FROM 7:00 TO 8:00

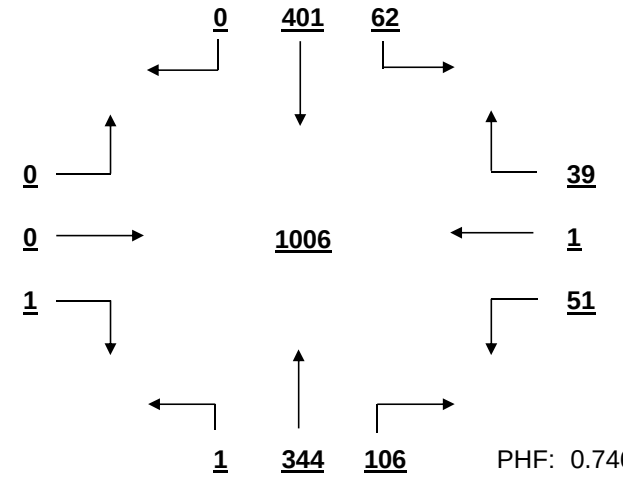

PHF: 0.746

SIGNAL WARRANT ANALYSIS

Harbison Blvd AT Bower Pkwy-Shopping Center Date: 11/21/2016

Minor Street Volume, percent of total = 20.7%
Percent of Left Turns from Minor Street = 52.3%
Percent of Right Turns from Minor Street = 45.3%
Percent of Minor Street Right Turns to Remove from Warrant Analysis = 0%
WARRANT BASIS = **100%**

Warrant No. 1 - Vehicular Volume is met

Condition A - Minimum Vehicular Volume is met

Average Major Street % of Warrant				Average Minor Street % of Warrant			
1641.6	/ 600	=	274%	408.0	/ 200	=	204%

Hourly percent of warrant

	7:00 - 8:00	8:00 - 9:00	9:00 - 10:00	10:00 - 11:00	11:00 - 12:00	12:00 - 13:00	13:00 - 14:00	14:00 - 15:00	15:00 - 16:00	16:00 - 17:00	17:00 - 18:00	18:00 - 19:00
Major St.	152%	155%	190%	245%	271%	369%	347%	316%	290%	321%	328%	299%
Minor St.	46%	60%	87%	176%	234%	278%	292%	259%	253%	251%	256%	258%

Condition B - Interruption to Continuous Traffic is met

Average Major Street % of Warrant				Average Minor Street % of Warrant			
1641.6	/ 900	=	182%	408.0	/ 100	=	408%

Hourly percent of warrant

	7:00 - 8:00	8:00 - 9:00	9:00 - 10:00	10:00 - 11:00	11:00 - 12:00	12:00 - 13:00	13:00 - 14:00	14:00 - 15:00	15:00 - 16:00	16:00 - 17:00	17:00 - 18:00	18:00 - 19:00
Major St.	102%	103%	127%	164%	181%	246%	231%	210%	193%	214%	219%	199%
Minor St.	91%	119%	173%	351%	468%	556%	584%	518%	506%	502%	512%	516%

80% Combination of Conditions A & B is met

Warrant No. 2 - Four Hour Vehicular Volume is met

Hourly percent of warrant

	7:00 - 8:00	8:00 - 9:00	9:00 - 10:00	10:00 - 11:00	11:00 - 12:00	12:00 - 13:00	13:00 - 14:00	14:00 - 15:00	15:00 - 16:00	16:00 - 17:00	17:00 - 18:00	18:00 - 19:00
Minor St.	40%	54%	116%	305%	407%	483%	508%	450%	440%	437%	445%	449%

Warrant No. 3 - Peak Hour is met

Percent of warrant
Overall Peak Hour: 12:15 - 13:15
Minor St. 409%

Percent of warrant
Higher Volume Side Street Peak Hour: 12:15 - 13:15
Minor St. 409%

Warrant No. 4 - Pedestrian Volume. Pedestrian volume shown are minumum volumes assuming heavy major street traffic. If these volumes are met, warrant 4 requires further engineering analysis

Minimum 4 hour ped. volume crossing major street: 107

Minimum peak hour ped. volume crossing major street: 133

Number of pedestrians crossing major street

	7:00 - 8:00	8:00 - 9:00	9:00 - 10:00	10:00 - 11:00	11:00 - 12:00	12:00 - 13:00	13:00 - 14:00	14:00 - 15:00	15:00 - 16:00	16:00 - 17:00	17:00 - 18:00	18:00 - 19:00
Major St.	0	0	0	0	0	1	0	0	0	0	0	0

Warrant No. 7 - Crash Experience (Requires 3 criteria analysis by engineering)

Total Number: 0 From: 1/1/2005 to 1/1/2008
Accident Rate: 0.00 per million entering vehicles

Types of Accidents	No.	/	Avg.		No.	/	Avg.
Right Angle	0	/	0.0	Rear End	0	/	0.0
Lost Control	0	/	0.0	Side Swipe	0	/	0.0
Left Turn	0	/	0.0	Other	0	/	0.0

SOUTH CAROLINA DEPARTMENT OF TRANSPORTATION
DISTRICT 1
TRAFFIC ENGINEERING

County: Richland City: Columbia Date: 11/21/2016

Major Rt: St. Andrews Rd * Not on State System Minor Rt: Harbison Blvd-Emory Ln * Not on State System

Day of Week: Monday Weather: Clear Office: Short Counts JMS

Type of Control: Signal Speed Limit (major st) 40

Direction of Minor Street: E-W Intersection ADT - 32050 (Calc)

Number of Lanes (major st)* 2 Number of Lanes (minor st)* 2

* Each Direction

INTERSECTION VOLUME SUMMARY

	From N St. Andrews Rd				From S St. Andrews Rd				From E Harbison Blvd-Emor				From W Harbison Blvd-Emor				Total	Total
	LT	STR	RT	TOT	LT	STR	RT	TOT	LT	STR	RT	TOT	LT	STR	RT	TOT	Vol	Peds
7:00 - 7:15	37	119	0	156	2	52	26	80	15	7	42	64	2	21	3	26	326	0
7:15 - 7:30	58	183	2	243	1	76	37	114	38	23	57	118	4	28	5	37	512	0
7:30 - 7:45	86	242	4	332	4	100	19	123	39	15	75	129	5	47	11	63	647	0
7:45 - 8:00	75	198	5	278	5	125	29	159	27	17	109	153	13	52	21	86	676	1
8:00 - 8:15	68	197	10	275	2	113	13	128	44	22	94	160	30	49	21	100	663	0
8:15 - 8:30	86	209	4	299	2	59	21	82	44	8	59	111	5	33	6	44	536	0
8:30 - 8:45	55	132	3	190	0	53	34	87	37	16	37	90	6	35	5	46	413	0
8:45 - 9:00	73	180	4	257	0	65	31	96	41	7	47	95	7	21	3	31	479	1
9:00 - 9:15	73	118	0	191	2	74	33	109	47	13	39	99	2	25	1	28	427	0
9:15 - 9:30	73	105	0	178	2	90	43	135	33	11	40	84	1	28	4	33	430	0
9:30 - 9:45	73	108	0	181	0	92	60	152	27	18	51	96	10	44	0	54	483	0
9:45 - 10:00	78	105	5	188	3	77	63	143	31	22	62	115	2	40	0	42	488	0
10:00 - 10:15	83	98	7	188	0	80	68	148	30	17	69	116	1	36	2	39	491	0
10:15 - 10:30	80	102	2	184	0	80	58	138	41	19	71	131	1	37	2	40	493	0
10:30 - 10:45	92	112	2	206	0	77	56	133	50	24	84	158	0	42	3	45	542	0
10:45 - 11:00	94	109	3	206	2	100	69	171	35	21	84	140	1	33	1	35	552	0
11:00 - 11:15	102	107	3	212	1	0	57	58	45	24	80	149	3	27	2	32	451	0
11:15 - 11:30	91	107	2	200	3	79	59	141	39	31	92	162	1	43	4	48	551	1
11:30 - 11:45	98	100	5	203	0	103	82	185	60	39	83	182	3	35	4	42	612	0
11:45 - 12:00	113	147	4	264	2	115	85	202	72	33	112	217	3	22	7	32	715	0
12:00 - 12:15	109	129	5	243	5	113	100	218	63	41	114	218	3	38	2	43	722	0
12:15 - 12:30	94	113	3	210	4	116	84	204	80	43	112	235	3	47	5	55	704	0
12:30 - 12:45	103	125	4	232	3	93	84	180	78	37	126	241	5	39	7	51	704	0
12:45 - 13:00	100	129	5	234	2	96	74	172	65	42	115	222	4	43	3	50	678	0
13:00 - 13:15	87	126	1	214	1	97	79	177	69	35	129	233	3	29	1	33	657	0
13:15 - 13:30	83	112	9	204	1	94	66	161	77	33	114	224	0	38	2	40	629	0
13:30 - 13:45	87	127	0	214	1	129	87	217	67	43	125	235	3	53	1	57	723	0
13:45 - 14:00	90	105	6	201	2	116	76	194	72	53	140	265	2	44	2	48	708	0
14:00 - 14:15	102	118	4	224	0	96	76	172	75	53	142	270	2	45	1	48	714	0
14:15 - 14:30	78	100	3	181	1	112	72	185	75	44	125	244	5	41	0	46	656	0
14:30 - 14:45	102	137	3	242	4	116	76	196	48	45	101	194	3	20	0	23	655	1
14:45 - 15:00	98	140	2	240	4	108	73	185	72	64	110	246	5	36	1	42	713	1
15:00 - 15:15	80	92	5	177	5	146	84	235	53	30	115	198	1	37	2	40	650	0
15:15 - 15:30	82	110	0	192	0	172	86	258	54	50	97	201	2	33	3	38	689	1
15:30 - 15:45	75	139	8	222	6	178	87	271	64	44	132	240	5	30	7	42	775	0
15:45 - 16:00	100	211	20	331	10	148	86	244	49	33	124	206	13	48	10	71	852	3
16:00 - 16:15	86	138	6	230	7	167	94	268	67	62	119	248	10	44	8	62	808	5
16:15 - 16:30	89	108	1	198	4	181	93	278	56	57	126	239	7	44	4	55	770	4
16:30 - 16:45	84	135	4	223	2	192	104	298	57	41	113	211	4	32	3	39	771	0
16:45 - 17:00	75	179	4	258	7	147	76	230	47	46	122	215	5	34	3	42	745	1
17:00 - 17:15	85	152	8	245	2	150	78	230	60	68	130	258	2	38	4	44	777	0
17:15 - 17:30	84	143	3	230	3	186	92	281	53	47	122	222	2	37	1	40	773	0
17:30 - 17:45	80	115	1	196	1	167	102	270	41	37	124	202	1	41	4	46	714	0
17:45 - 18:00	75	131	1	207	2	150	98	250	49	39	138	226	3	38	2	43	726	0
18:00 - 18:15	92	143	2	237	11	127	69	207	56	49	136	241	6	49	3	58	743	0
18:15 - 18:30	43	113	1	157	7	149	71	227	52	56	121	229	3	32	8	43	656	0
18:30 - 18:45	66	97	5	168	6	92	65	163	55	39	125	219	0	39	2	41	591	0
18:45 - 19:00	55	71	2	128	2	81	47	130	39	36	109	184	2	26	1	29	471	0
TOTAL	3972	6316	181	10469	134	5329	3222	8685	2488	1654	4793	8935	204	1773	195	2172	30261	19
Trucks	16	24	1	41	3	44	16	63	4	8	40	52	1	12	0	13	169	0.6%
School Buses	13	34	6	53	4	29	6	39	20	16	39	75	56	6	1	63	230	0.8%

TOTAL AND PEAK HOUR VOLUME DIAGRAMS

St. Andrews Rd AT Harbison Blvd-Emory Ln Date: 11/21/2016

12.0 HOUR TOTAL VOLUME
FROM 7:00 TO 15:00

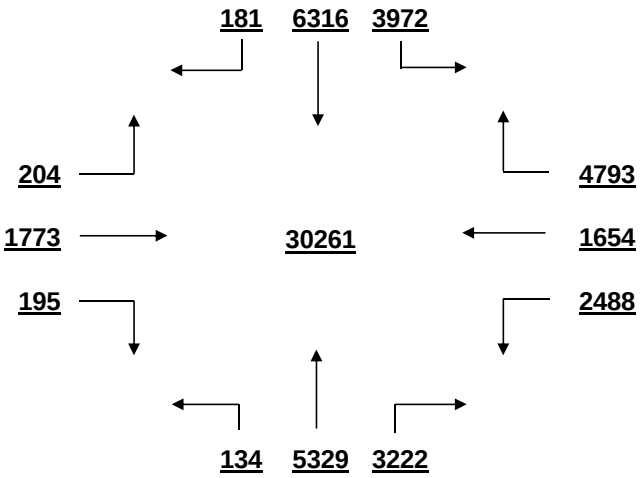

OVERALL PEAK HOUR VOLUME
FROM 15:30 TO 16:30

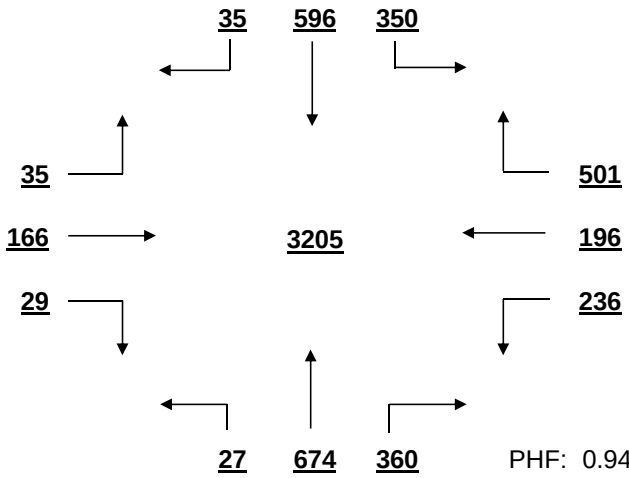

PHF: 0.940

AM PEAK HOUR VOLUME (0:00-10:45)
FROM 7:30 TO 8:30

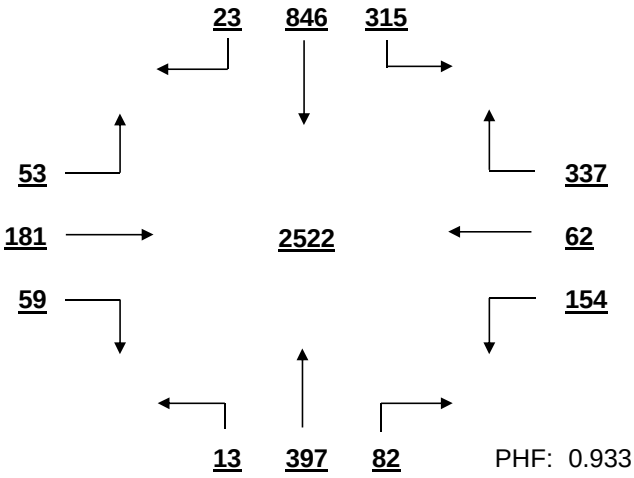

PHF: 0.933

PM PEAK HOUR VOLUME (14:15-23:45)
FROM 15:30 TO 16:30

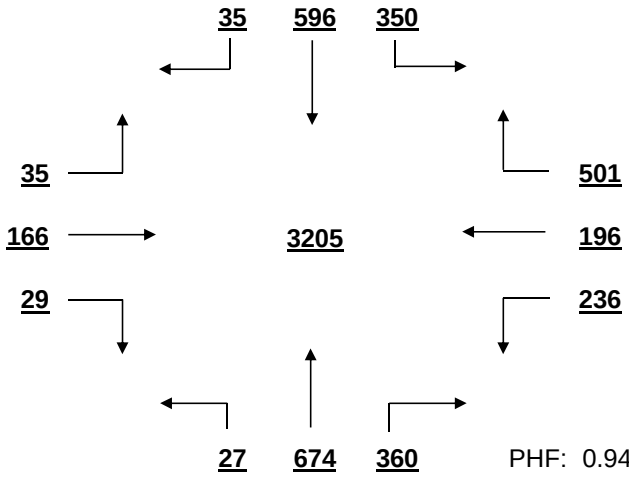

PHF: 0.940

MID-DAY PEAK HOUR VOLUME (11:00-14:00)
FROM 11:45 TO 12:45

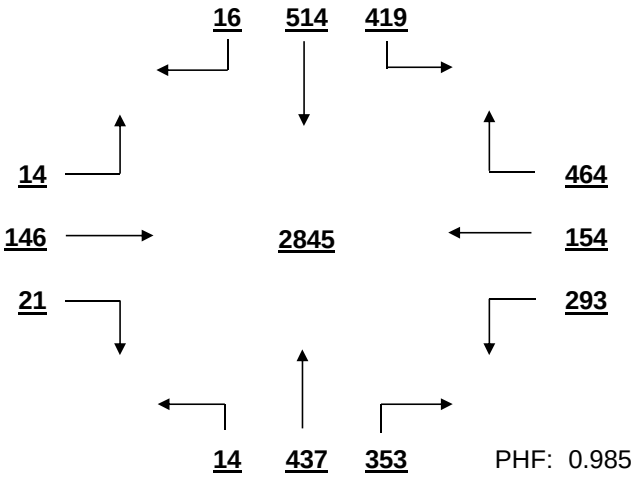

PHF: 0.985

OTHER HOUR VOLUME
FROM 7:00 TO 8:00

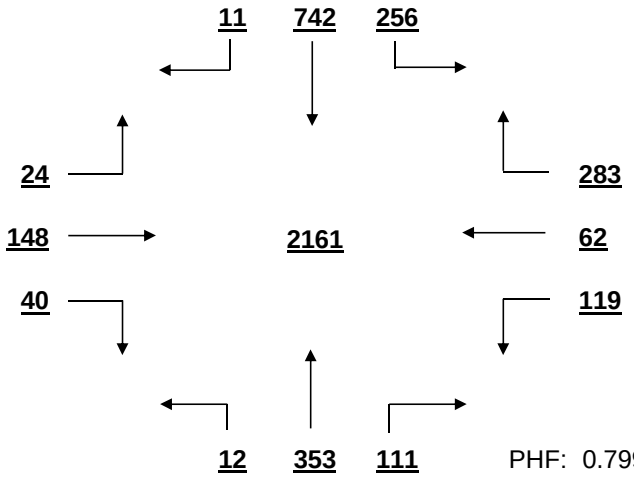

PHF: 0.799

SIGNAL WARRANT ANALYSIS

St. Andrews Rd AT Harbison Blvd-Emory Ln Date: 11/21/2016

Minor Street Volume, percent of total = 36.7%
Percent of Left Turns from Minor Street = 24.2%
Percent of Right Turns from Minor Street = 44.9%
Percent of Minor Street Right Turns to Remove from Warrant Analysis = 0%
WARRANT BASIS = **100%**

Warrant No. 1 - Vehicular Volume is met

Condition A - Minimum Vehicular Volume is met

Average Major Street % of Warrant				Average Minor Street % of Warrant			
1596.2	/ 600	=	266%	744.6	/ 200	=	372%

Hourly percent of warrant

	7:00 - 8:00	8:00 - 9:00	9:00 - 10:00	10:00 - 11:00	11:00 - 12:00	12:00 - 13:00	13:00 - 14:00	14:00 - 15:00	15:00 - 16:00	16:00 - 17:00	17:00 - 18:00	18:00 - 19:00
Major St.	248%	236%	213%	229%	244%	282%	264%	271%	322%	331%	318%	236%
Minor St.	232%	228%	197%	273%	355%	458%	479%	477%	423%	457%	454%	437%

Condition B - Interruption to Continuous Traffic is met

Average Major Street % of Warrant				Average Minor Street % of Warrant			
1596.2	/ 900	=	177%	744.6	/ 100	=	745%

Hourly percent of warrant

	7:00 - 8:00	8:00 - 9:00	9:00 - 10:00	10:00 - 11:00	11:00 - 12:00	12:00 - 13:00	13:00 - 14:00	14:00 - 15:00	15:00 - 16:00	16:00 - 17:00	17:00 - 18:00	18:00 - 19:00
Major St.	165%	157%	142%	153%	163%	188%	176%	181%	214%	220%	212%	157%
Minor St.	464%	456%	394%	545%	710%	916%	957%	954%	845%	913%	908%	873%

80% Combination of Conditions A & B is met

Warrant No. 2 - Four Hour Vehicular Volume is met

Hourly percent of warrant

	7:00 - 8:00	8:00 - 9:00	9:00 - 10:00	10:00 - 11:00	11:00 - 12:00	12:00 - 13:00	13:00 - 14:00	14:00 - 15:00	15:00 - 16:00	16:00 - 17:00	17:00 - 18:00	18:00 - 19:00
Minor St.	403%	397%	336%	474%	617%	797%	832%	830%	735%	794%	790%	759%

Warrant No. 3 - Peak Hour is met

Percent of warrant			Percent of warrant	
Overall Peak Hour:	15:30 - 16:30	Higher Volume Side Street Peak Hour:	13:30 - 14:30	
Minor St.	622%	Minor St.	611%	

Warrant No. 4 - Pedestrian Volume. Pedestrian volume shown are minumum volumes assuming heavy major street traffic. If these volumes are met, warrant 4 requires further engineering analysis

Minimum 4 hour ped. volume crossing major street: 107

Minimum peak hour ped. volume crossing major street: 133

Number of pedestrians crossing major street

	7:00 - 8:00	8:00 - 9:00	9:00 - 10:00	10:00 - 11:00	11:00 - 12:00	12:00 - 13:00	13:00 - 14:00	14:00 - 15:00	15:00 - 16:00	16:00 - 17:00	17:00 - 18:00	18:00 - 19:00
Major St.	0	0	0	0	0	0	0	1	0	0	0	0

Warrant No. 7 - Crash Experience (Requires 3 criteria analysis by engineering)

Total Number: 0 From: 1/1/2005 to 1/1/2008

Accident Rate: 0.00 per million entering vehicles

Types of Accidents	No.	/	Avg.		No.	/	Avg.
Right Angle	0	/	0.0	Rear End	0	/	0.0
Lost Control	0	/	0.0	Side Swipe	0	/	0.0
Left Turn	0	/	0.0	Other	0	/	0.0

SOUTH CAROLINA DEPARTMENT OF TRANSPORTATION
DISTRICT 1
TRAFFIC ENGINEERING

County: Richland City: Columbia Date: 11/21/2016

Major Rt: Bower Pkwy * Not on State System Minor Rt: Park Terrace Dr * Not on State System

Day of Week: Monday Weather: Clear Office: Short Counts JMS

Type of Control: Signal Speed Limit (major st) 35

Direction of Minor Street: N-S Intersection ADT - 17080 (Calc)

Number of Lanes (major st)* 1 Number of Lanes (minor st)* 1

* Each Direction

INTERSECTION VOLUME SUMMARY

	From N Park Terrace Dr				From S Park Terrace Dr				From E Bower Pkwy				From W Bower Pkwy				Total	Total
	LT	STR	RT	TOT	LT	STR	RT	TOT	LT	STR	RT	TOT	LT	STR	RT	TOT	Vol	Peds
7:00 - 7:15	14	0	6	20	0	0	0	0	2	17	13	32	3	10	0	13	65	0
7:15 - 7:30	19	0	0	19	0	2	1	3	1	27	20	48	4	18	0	22	92	0
7:30 - 7:45	36	0	1	37	0	0	0	0	0	34	22	56	2	25	0	27	120	0
7:45 - 8:00	44	1	8	53	1	0	0	1	0	65	24	89	2	30	0	32	175	0
8:00 - 8:15	34	1	4	39	0	1	2	3	1	42	19	62	3	23	0	26	130	0
8:15 - 8:30	31	1	6	38	0	1	0	1	0	29	13	42	5	24	0	29	110	0
8:30 - 8:45	32	1	14	47	0	0	0	0	1	35	21	57	5	30	0	35	139	0
8:45 - 9:00	22	0	15	37	0	0	0	0	4	64	24	92	9	29	0	38	167	0
9:00 - 9:15	17	1	17	35	0	0	2	2	3	58	30	91	18	31	2	51	179	0
9:15 - 9:30	16	2	11	29	0	1	0	1	3	58	21	82	12	18	0	30	142	1
9:30 - 9:45	17	0	13	30	0	0	1	1	2	49	35	86	15	33	1	49	166	0
9:45 - 10:00	28	1	19	48	3	0	1	4	3	80	41	124	27	39	0	66	242	0
10:00 - 10:15	21	0	23	44	0	1	0	1	2	54	31	87	21	37	0	58	190	0
10:15 - 10:30	24	0	23	47	0	1	0	1	3	70	42	115	28	47	0	75	238	0
10:30 - 10:45	38	1	29	68	1	0	0	1	0	85	38	123	31	54	0	85	277	0
10:45 - 11:00	37	0	30	67	0	2	0	2	2	73	46	121	32	38	1	71	261	0
11:00 - 11:15	26	0	32	58	0	3	0	3	1	90	52	143	31	45	1	77	281	0
11:15 - 11:30	46	0	37	83	0	0	1	1	4	87	45	136	31	52	0	83	303	0
11:30 - 11:45	24	2	48	74	1	3	2	6	1	95	49	145	33	60	1	94	319	0
11:45 - 12:00	47	1	70	118	1	1	0	2	2	116	47	165	30	68	1	99	384	0
12:00 - 12:15	46	2	50	98	0	0	5	5	4	110	55	169	28	77	1	106	378	0
12:15 - 12:30	44	0	49	93	2	1	3	6	2	134	56	192	48	80	1	129	420	0
12:30 - 12:45	55	2	53	110	2	1	3	6	2	113	58	173	34	94	2	130	419	0
12:45 - 13:00	72	2	62	136	0	5	5	10	1	111	59	171	45	110	0	155	472	0
13:00 - 13:15	62	2	46	110	0	3	1	4	1	84	47	132	50	101	0	151	397	0
13:15 - 13:30	56	0	46	102	0	5	2	7	0	88	43	131	52	86	2	140	380	0
13:30 - 13:45	54	2	42	98	0	1	3	4	0	73	47	120	43	68	2	113	335	0
13:45 - 14:00	45	0	60	105	2	1	1	4	3	93	48	144	52	99	0	151	404	0
14:00 - 14:15	50	1	41	92	0	2	2	4	0	83	35	118	52	82	0	134	348	0
14:15 - 14:30	52	0	50	102	0	0	4	4	2	97	60	159	36	105	2	143	408	0
14:30 - 14:45	64	0	34	98	0	0	1	1	0	103	55	158	38	106	0	144	401	0
14:45 - 15:00	58	1	51	110	0	0	1	1	1	83	47	131	61	78	1	140	382	0
15:00 - 15:15	50	0	29	79	1	1	2	4	1	76	44	121	38	75	2	115	319	0
15:15 - 15:30	41	3	37	81	0	1	1	2	2	89	47	138	40	86	0	126	347	0
15:30 - 15:45	46	2	40	88	0	0	1	1	6	55	41	102	33	57	0	90	281	0
15:45 - 16:00	56	3	23	82	0	4	2	6	1	85	41	127	29	61	0	90	305	0
16:00 - 16:15	33	0	14	47	0	0	3	3	3	74	41	118	29	48	1	78	246	0
16:15 - 16:30	49	0	44	93	0	1	1	2	6	105	43	154	36	63	1	100	349	0
16:30 - 16:45	32	0	30	62	0	0	1	1	1	96	49	146	35	76	1	112	321	0
16:45 - 17:00	37	0	11	48	0	0	3	3	0	90	34	124	36	51	0	87	262	0
17:00 - 17:15	42	2	25	69	0	2	4	6	3	88	41	132	42	71	1	114	321	0
17:15 - 17:30	37	6	45	88	0	1	0	1	7	104	52	163	29	68	0	97	349	0
17:30 - 17:45	63	7	40	110	0	2	2	4	3	108	48	159	31	69	0	100	373	0
17:45 - 18:00	43	4	46	93	1	2	2	5	3	95	46	144	29	83	2	114	356	0
18:00 - 18:15	39	2	33	74	0	3	4	7	7	84	35	126	30	49	2	81	288	0
18:15 - 18:30	47	5	38	90	0	0	5	5	8	96	42	146	39	49	1	89	330	0
18:30 - 18:45	38	6	40	84	3	2	2	7	5	98	33	136	33	77	1	111	338	0
18:45 - 19:00	38	5	35	78	0	3	6	9	3	72	38	113	22	48	3	73	273	0
TOTAL	1922	69	1520	3511	18	57	80	155	110	3815	1918	5843	1412	2828	33	4273	13782	1
Trucks	7	1	1	9	0	1	0	1	1	11	10	22	2	16	0	18	50	0.4%
School Buses	4	0	0	4	0	0	0	0	0	13	15	28	0	5	0	5	37	0.3%

TOTAL AND PEAK HOUR VOLUME DIAGRAMS

Bower Pkwy AT Park Terrace Dr Date: 11/21/2016

12.0 HOUR TOTAL VOLUME
FROM 7:00 TO 15:00

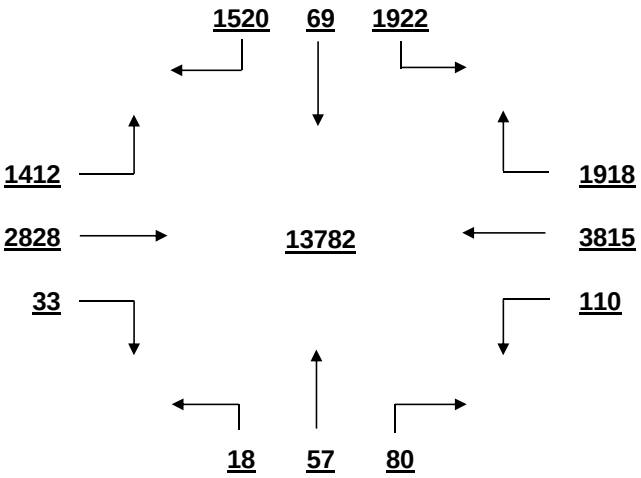

OVERALL PEAK HOUR VOLUME
FROM 12:15 TO 13:15

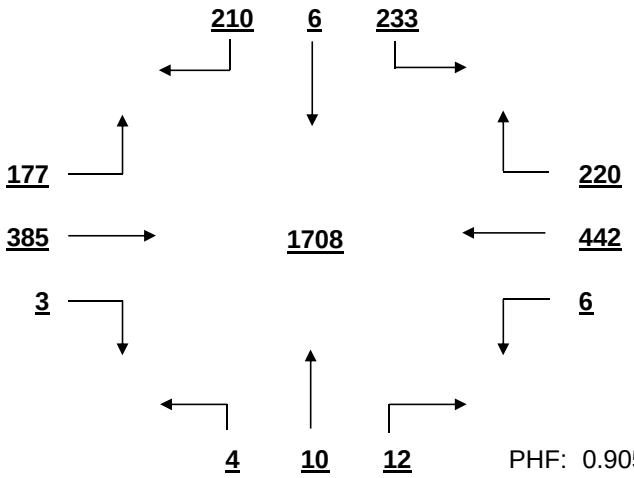

PHF: 0.905

AM PEAK HOUR VOLUME (0:00-10:45)
FROM 9:45 TO 10:45

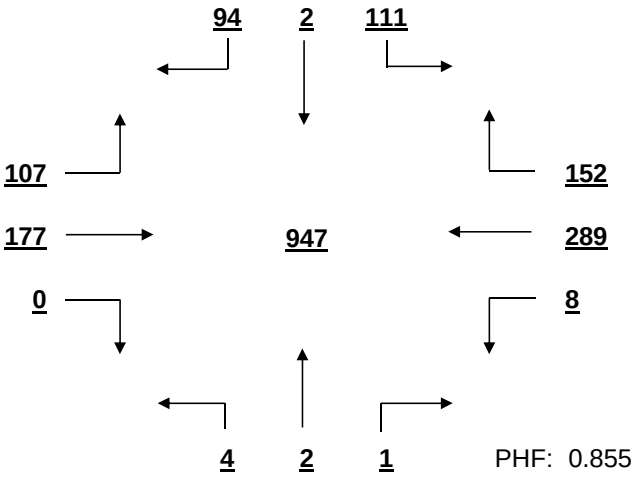

PHF: 0.855

PM PEAK HOUR VOLUME (14:15-23:45)
FROM 14:15 TO 15:15

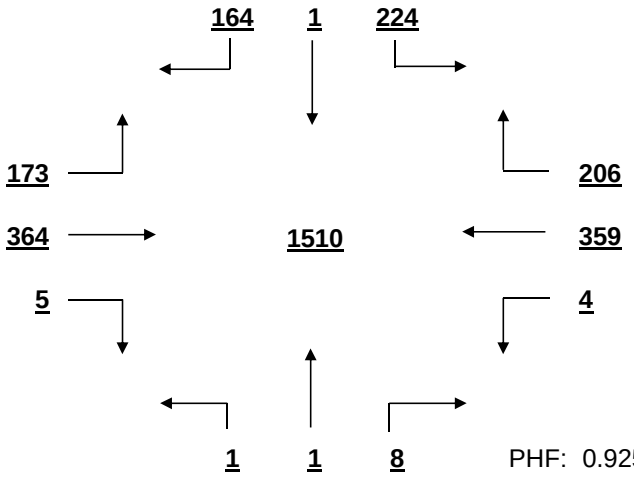

PHF: 0.925

MID-DAY PEAK HOUR VOLUME (11:00-14:00)
FROM 12:15 TO 13:15

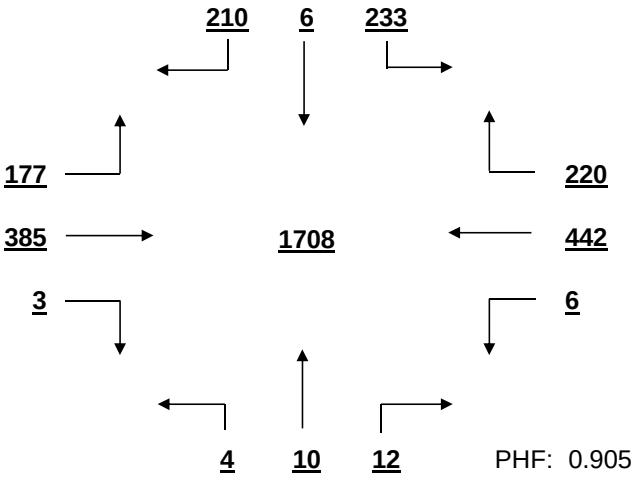

PHF: 0.905

OTHER HOUR VOLUME
FROM 7:00 TO 8:00

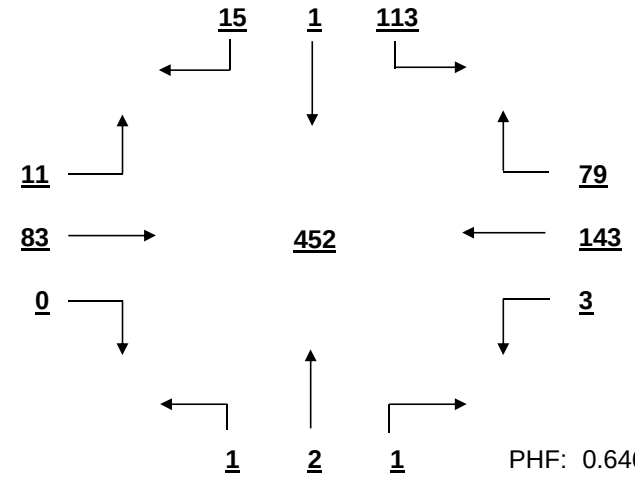

PHF: 0.646

SIGNAL WARRANT ANALYSIS

Bower Pkwy AT Park Terrace Dr Date: 11/21/2016

Minor Street Volume, percent of total = 26.6%
Percent of Left Turns from Minor Street = 52.9%
Percent of Right Turns from Minor Street = 43.6%
Percent of Minor Street Right Turns to Remove from Warrant Analysis = 0%
WARRANT BASIS = **100%**

Warrant No. 1 - Vehicular Volume is met

Condition A - Minimum Vehicular Volume is met

Average Major Street % of Warrant				Average Minor Street % of Warrant			
843.0	/	500	= 169%	292.6	/	150	= 195%

Hourly percent of warrant

	7:00 - 8:00	8:00 - 9:00	9:00 - 10:00	10:00 - 11:00	11:00 - 12:00	12:00 - 13:00	13:00 - 14:00	14:00 - 15:00	15:00 - 16:00	16:00 - 17:00	17:00 - 18:00	18:00 - 19:00
Major St.	64%	76%	116%	147%	188%	245%	216%	225%	182%	184%	205%	175%
Minor St.	86%	107%	95%	151%	222%	291%	277%	268%	220%	167%	240%	217%

Condition B - Interruption to Continuous Traffic is met

Average Major Street % of Warrant				Average Minor Street % of Warrant			
843.0	/	750	= 112%	292.6	/	75	= 390%

Hourly percent of warrant

	7:00 - 8:00	8:00 - 9:00	9:00 - 10:00	10:00 - 11:00	11:00 - 12:00	12:00 - 13:00	13:00 - 14:00	14:00 - 15:00	15:00 - 16:00	16:00 - 17:00	17:00 - 18:00	18:00 - 19:00
Major St.	43%	51%	77%	98%	126%	163%	144%	150%	121%	123%	136%	117%
Minor St.	172%	215%	189%	301%	444%	583%	553%	536%	440%	333%	480%	435%

80% Combination of Conditions A & B is met

Warrant No. 2 - Four Hour Vehicular Volume is met

Hourly percent of warrant

	7:00 - 8:00	8:00 - 9:00	9:00 - 10:00	10:00 - 11:00	11:00 - 12:00	12:00 - 13:00	13:00 - 14:00	14:00 - 15:00	15:00 - 16:00	16:00 - 17:00	17:00 - 18:00	18:00 - 19:00
Minor St.	37%	51%	63%	133%	299%	546%	496%	524%	277%	214%	382%	255%

Warrant No. 3 - Peak Hour is met

	Percent of warrant		Percent of warrant
Overall Peak Hour:	12:15 - 13:15	Higher Volume Side Street Peak Hour:	12:30 - 13:30
Minor St.	320%	Minor St.	302%

Warrant No. 4 - Pedestrian Volume. Pedestrian volume shown are minumum volumes assuming heavy major street traffic. If these volumes are met, warrant 4 requires further engineering analysis

Minimum 4 hour ped. volume crossing major street: 107

Minimum peak hour ped. volume crossing major street: 133

Number of pedestrians crossing major street

	7:00 - 8:00	8:00 - 9:00	9:00 - 10:00	10:00 - 11:00	11:00 - 12:00	12:00 - 13:00	13:00 - 14:00	14:00 - 15:00	15:00 - 16:00	16:00 - 17:00	17:00 - 18:00	18:00 - 19:00
Major St.	0	0	0	0	0	0	0	0	0	0	0	0

Warrant No. 7 - Crash Experience (Requires 3 criteria analysis by engineering)

Total Number: 0 From: 1/1/2005 to 1/1/2008

Accident Rate: 0.00 per million entering vehicles

Types of Accidents	No.	/	Avg.		No.	/	Avg.
Right Angle	0	/	0.0	Rear End	0	/	0.0
Lost Control	0	/	0.0	Side Swipe	0	/	0.0
Left Turn	0	/	0.0	Other	0	/	0.0

SOUTH CAROLINA DEPARTMENT OF TRANSPORTATION
DISTRICT 1
TRAFFIC ENGINEERING

County: Richland City: Columbia Date: 11/22/2016

Major Rt: Bower Pkwy * Not on State System Minor Rt: Saturn Pkwy * Not on State System

Day of Week: Tuesday Weather: Clear Office: Short Counts JMS

Type of Control: Stop Sign Speed Limit (major st) 35

Direction of Minor Street: E-W Intersection ADT - 14560 (Calc)

Number of Lanes (major st)* 1 Number of Lanes (minor st)* 1

* Each Direction

INTERSECTION VOLUME SUMMARY

	From N Bower Pkwy				From S Bower Pkwy				From E Saturn Pkwy				From W Saturn Pkwy				Total	Total
	LT	STR	RT	TOT	LT	STR	RT	TOT	LT	STR	RT	TOT	LT	STR	RT	TOT	Vol	Peds
7:00 - 7:15	2	29	0	31	0	58	4	62	5	0	1	6	0	0	0	0	99	0
7:15 - 7:30	1	49	0	50	0	53	7	60	12	0	0	12	0	0	0	0	122	0
7:30 - 7:45	1	72	0	73	0	71	11	82	12	0	4	16	0	0	0	0	171	0
7:45 - 8:00	2	77	0	79	0	91	15	106	9	0	4	13	0	0	0	0	198	0
8:00 - 8:15	2	62	0	64	0	70	11	81	20	0	2	22	0	0	0	0	167	0
8:15 - 8:30	1	47	0	48	0	57	9	66	7	0	6	13	0	0	0	0	127	0
8:30 - 8:45	0	50	0	50	0	81	9	90	9	0	1	10	0	0	0	0	150	0
8:45 - 9:00	4	57	0	61	0	92	16	108	13	0	3	16	0	0	0	0	185	0
9:00 - 9:15	2	49	0	51	0	84	13	97	16	0	2	18	0	0	0	0	166	0
9:15 - 9:30	0	58	0	58	0	114	11	125	8	0	0	8	0	0	0	0	191	0
9:30 - 9:45	0	53	0	53	0	110	17	127	9	0	6	15	0	0	0	0	195	0
9:45 - 10:00	1	57	0	58	0	133	16	149	7	0	2	9	0	0	0	0	216	0
10:00 - 10:15	4	68	0	72	0	141	22	163	13	0	3	16	0	0	0	0	251	0
10:15 - 10:30	1	74	0	75	0	117	14	131	14	0	5	19	0	0	0	0	225	0
10:30 - 10:45	1	96	0	97	0	126	18	144	13	0	1	14	0	0	0	0	255	0
10:45 - 11:00	0	89	0	89	0	149	16	165	16	0	2	18	0	0	0	0	272	0
11:00 - 11:15	1	107	0	108	0	175	18	193	15	0	3	18	0	0	0	0	319	0
11:15 - 11:30	2	99	0	101	0	133	7	140	8	0	1	9	0	0	0	0	250	0
11:30 - 11:45	3	117	0	120	0	167	14	181	12	0	3	15	0	0	0	0	316	0
11:45 - 12:00	1	99	0	100	0	197	18	215	18	0	5	23	0	0	0	0	338	0
12:00 - 12:15	1	112	0	113	0	188	15	203	11	0	1	12	0	0	0	0	328	0
12:15 - 12:30	5	95	0	100	0	155	12	167	6	0	6	12	0	0	0	0	279	0
12:30 - 12:45	0	108	0	108	0	157	13	170	5	0	4	9	0	0	0	0	287	0
12:45 - 13:00	3	122	0	125	0	166	30	196	14	0	6	20	0	0	0	0	341	0
13:00 - 13:15	4	152	0	156	0	124	13	137	14	0	1	15	0	0	0	0	308	0
13:15 - 13:30	6	67	0	73	0	88	7	95	14	0	2	16	0	0	0	0	184	0
13:30 - 13:45	4	78	0	82	0	97	18	115	5	0	1	6	0	0	0	0	203	0
13:45 - 14:00	4	114	0	118	0	153	15	168	13	0	2	15	0	0	0	0	301	0
14:00 - 14:15	3	138	0	141	0	129	27	156	17	0	1	18	0	0	0	0	315	0
14:15 - 14:30	4	149	0	153	0	171	16	187	19	0	4	23	0	0	0	0	363	0
14:30 - 14:45	6	125	0	131	0	116	14	130	14	0	5	19	0	0	0	0	280	0
14:45 - 15:00	2	125	0	127	0	183	8	191	18	0	3	21	0	0	0	0	339	0
15:00 - 15:15	2	131	0	133	0	142	22	164	12	0	0	12	0	0	0	0	309	0
15:15 - 15:30	1	113	0	114	0	140	17	157	12	0	3	15	0	0	0	0	286	0
15:30 - 15:45	0	127	0	127	0	172	12	184	13	0	3	16	0	0	0	0	327	0
15:45 - 16:00	2	97	0	99	0	127	23	150	11	0	3	14	0	0	0	0	263	0
16:00 - 16:15	3	102	0	105	0	130	22	152	9	0	6	15	0	0	0	0	272	0
16:15 - 16:30	2	122	0	124	0	168	19	187	16	0	3	19	0	0	0	0	330	0
16:30 - 16:45	3	134	0	137	0	177	23	200	24	0	2	26	0	0	0	0	363	0
16:45 - 17:00	1	122	0	123	0	211	17	228	16	0	4	20	0	0	0	0	371	0
17:00 - 17:15	3	133	0	136	0	184	18	202	29	0	0	29	0	0	0	0	367	0
17:15 - 17:30	1	133	0	134	0	173	17	190	26	0	5	31	0	0	0	0	355	0
17:30 - 17:45	6	112	0	118	0	198	16	214	25	0	2	27	0	0	0	0	359	0
17:45 - 18:00	3	122	0	125	0	149	19	168	26	0	8	34	0	0	0	0	327	0
18:00 - 18:15	9	117	0	126	0	196	13	209	34	0	6	40	0	0	0	0	375	0
18:15 - 18:30	4	149	0	153	0	137	12	149	30	0	8	38	0	0	0	0	340	0
18:30 - 18:45	3	122	0	125	0	159	18	177	47	0	4	51	0	0	0	0	353	0
18:45 - 19:00	10	124	0	134	0	128	12	140	28	0	0	28	0	0	0	0	302	0
TOTAL	124	4754	0	4878	0	6537	734	7271	744	0	147	891	0	0	0	0	13040	0
Trucks	0	20	0	20	0	16	12	28	11	0	1	12	0	0	0	0	60	0.5%
School Buses	0	6	0	6	0	21	3	24	2	0	5	7	0	0	0	0	37	0.3%

TOTAL AND PEAK HOUR VOLUME DIAGRAMS

Bower Pkwy AT Saturn Pkwy Date: 11/22/2016

12.0 HOUR TOTAL VOLUME
FROM 7:00 TO 15:00

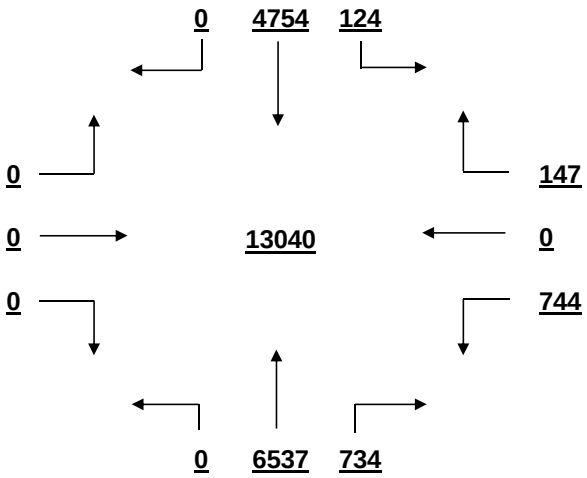

OVERALL PEAK HOUR VOLUME
FROM 16:30 TO 17:30

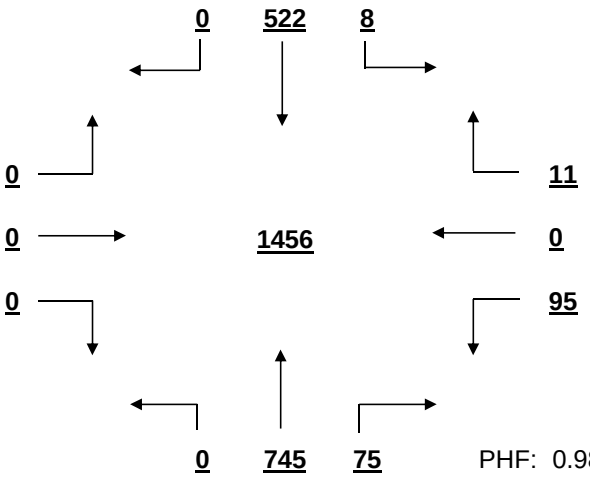

PHF: 0.981

AM PEAK HOUR VOLUME (0:00-10:45)
FROM 9:45 TO 10:45

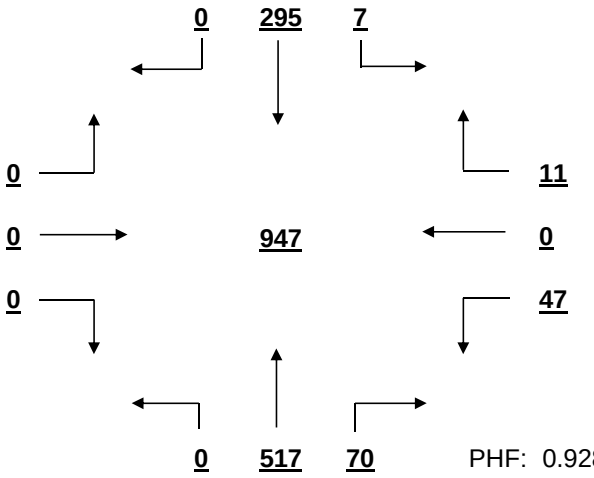

PHF: 0.928

PM PEAK HOUR VOLUME (14:15-23:45)
FROM 16:30 TO 17:30

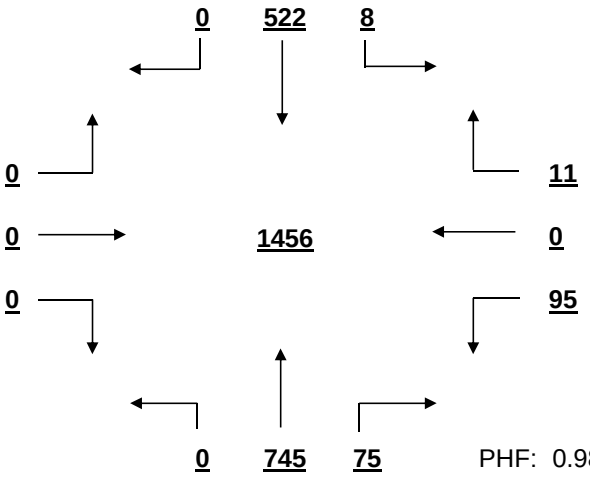

PHF: 0.981

MID-DAY PEAK HOUR VOLUME (11:00-14:00)
FROM 11:30 TO 12:30

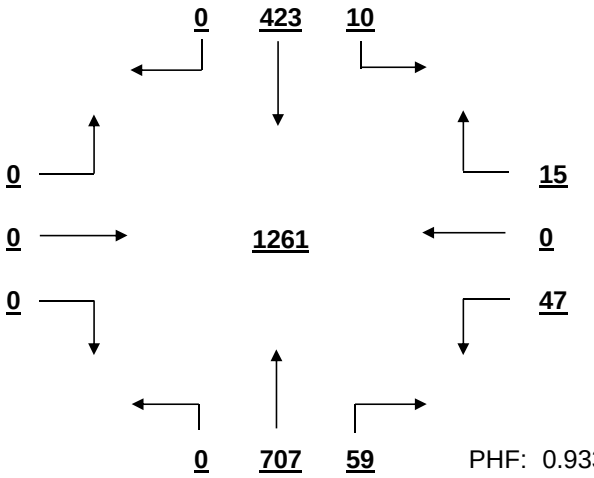

PHF: 0.933

OTHER HOUR VOLUME
FROM 7:00 TO 8:00

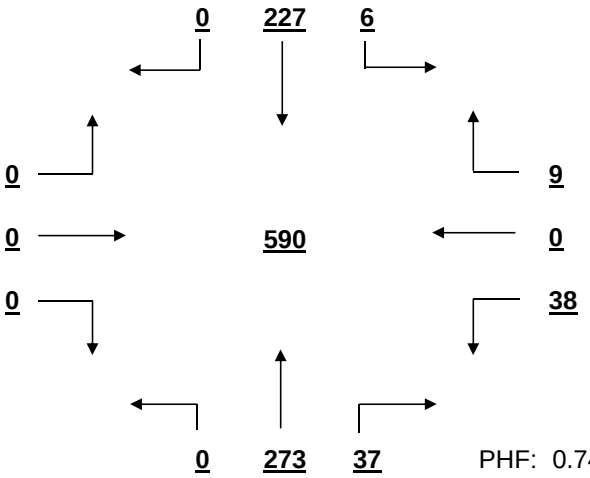

PHF: 0.745

SIGNAL WARRANT ANALYSIS

Bower Pkwy AT Saturn Pkwy Date: 11/22/2016

Minor Street Volume, percent of total = 6.8%
Percent of Left Turns from Minor Street = 83.5%
Percent of Right Turns from Minor Street = 16.5%
Percent of Minor Street Right Turns to Remove from Warrant Analysis = 0%
WARRANT BASIS = **100%**

Warrant No. 1 - Vehicular Volume is not met

Condition A - Minimum Vehicular Volume is not met

Average Major Street % of Warrant				Average Minor Street % of Warrant			
1012.4	/ 500	=	202%	74.3	/ 150	=	50%

Hourly percent of warrant

	7:00 - 8:00	8:00 - 9:00	9:00 - 10:00	10:00 - 11:00	11:00 - 12:00	12:00 - 13:00	13:00 - 14:00	14:00 - 15:00	15:00 - 16:00	16:00 - 17:00	17:00 - 18:00	18:00 - 19:00
Major St.	109%	114%	144%	187%	232%	236%	189%	243%	226%	251%	257%	243%
Minor St.	31%	41%	33%	45%	43%	35%	35%	54%	38%	53%	81%	105%

Condition B - Interruption to Continuous Traffic is not met

Average Major Street % of Warrant				Average Minor Street % of Warrant			
1012.4	/ 750	=	135%	74.3	/ 75	=	99%

Hourly percent of warrant

	7:00 - 8:00	8:00 - 9:00	9:00 - 10:00	10:00 - 11:00	11:00 - 12:00	12:00 - 13:00	13:00 - 14:00	14:00 - 15:00	15:00 - 16:00	16:00 - 17:00	17:00 - 18:00	18:00 - 19:00
Major St.	72%	76%	96%	125%	154%	158%	126%	162%	150%	167%	172%	162%
Minor St.	63%	81%	67%	89%	87%	71%	69%	108%	76%	107%	161%	209%

80% Combination of Conditions A & B is not met

Warrant No. 2 - Four Hour Vehicular Volume is met

Hourly percent of warrant

	7:00 - 8:00	8:00 - 9:00	9:00 - 10:00	10:00 - 11:00	11:00 - 12:00	12:00 - 13:00	13:00 - 14:00	14:00 - 15:00	15:00 - 16:00	16:00 - 17:00	17:00 - 18:00	18:00 - 19:00
Minor St.	19%	26%	29%	59%	81%	66%	47%	101%	74%	100%	151%	196%

Warrant No. 3 - Peak Hour is met

Percent of warrant			Percent of warrant	
Overall Peak Hour:	16:30 - 17:30	Higher Volume Side Street Peak Hour:	17:45 - 18:45	
Minor St.	90%	Minor St.	116%	

Warrant No. 4 - Pedestrian Volume. Pedestrian volume shown are minumum volumes assuming heavy major street traffic. If these volumes are met, warrant 4 requires further engineering analysis

Minimum 4 hour ped. volume crossing major street: 107

Minimum peak hour ped. volume crossing major street: 133

Number of pedestrians crossing major street

	7:00 - 8:00	8:00 - 9:00	9:00 - 10:00	10:00 - 11:00	11:00 - 12:00	12:00 - 13:00	13:00 - 14:00	14:00 - 15:00	15:00 - 16:00	16:00 - 17:00	17:00 - 18:00	18:00 - 19:00
Major St.	0	0	0	0	0	0	0	0	0	0	0	0

Warrant No. 7 - Crash Experience (Requires 3 criteria analysis by engineering)

Total Number: 0 From: 1/1/2005 to 1/1/2008
Accident Rate: 0.00 per million entering vehicles

Types of Accidents	No.	/	Avg.		No.	/	Avg.
Right Angle	0	/	0.0	Rear End	0	/	0.0
Lost Control	0	/	0.0	Side Swipe	0	/	0.0
Left Turn	0	/	0.0	Other	0	/	0.0

SOUTH CAROLINA DEPARTMENT OF TRANSPORTATION
DISTRICT 1
TRAFFIC ENGINEERING

County: Richland City: Columbia Date: 11/21/2016

Major Rt: Piney Grove Rd * Not on State System Minor Rt: Bower Pkwy-Jamil Rd * Not on State System

Day of Week: Monday Weather: Clear Office: Short Counts JMS

Type of Control: Signal Speed Limit (major st) 35

Direction of Minor Street: N-S Intersection ADT - 28910 (Calc)

Number of Lanes (major st)* 2 Number of Lanes (minor st)* 1

* Each Direction

INTERSECTION VOLUME SUMMARY

	From N Bower Pkwy-Jamil R				From S Bower Pkwy-Jamil R				From E Piney Grove Rd				From W Piney Grove Rd				Total	Total
	LT	STR	RT	TOT	LT	STR	RT	TOT	LT	STR	RT	TOT	LT	STR	RT	TOT	Vol	Peds
7:00 - 7:15	13	12	9	34	7	11	23	41	29	48	24	101	9	96	5	110	286	1
7:15 - 7:30	30	15	15	60	2	13	27	42	31	49	42	122	19	176	5	200	424	0
7:30 - 7:45	42	37	16	95	4	16	20	40	27	77	49	153	13	157	16	186	474	0
7:45 - 8:00	40	40	11	91	6	15	24	45	41	42	68	151	18	165	8	191	478	0
8:00 - 8:15	46	34	10	90	3	10	21	34	34	53	50	137	14	126	4	144	405	1
8:15 - 8:30	36	34	15	85	2	4	22	28	19	53	66	138	12	126	8	146	397	0
8:30 - 8:45	35	27	6	68	4	9	17	30	22	62	55	139	14	101	6	121	358	0
8:45 - 9:00	34	21	15	70	4	13	19	36	33	58	104	195	26	100	3	129	430	1
9:00 - 9:15	42	11	15	68	2	18	20	40	20	59	74	153	17	83	3	103	364	1
9:15 - 9:30	19	15	0	34	4	15	23	42	16	61	87	164	20	83	4	107	347	0
9:30 - 9:45	45	11	0	56	3	19	22	44	24	61	102	187	10	73	1	84	371	0
9:45 - 10:00	40	28	15	83	3	25	24	52	29	68	109	206	17	70	2	89	430	2
10:00 - 10:15	56	13	10	79	3	17	21	41	16	62	104	182	17	71	5	93	395	0
10:15 - 10:30	60	14	13	87	6	20	20	46	21	62	120	203	25	76	5	106	442	0
10:30 - 10:45	54	26	17	97	6	15	25	46	10	70	119	199	22	67	2	91	433	0
10:45 - 11:00	59	20	24	103	4	24	24	52	24	83	125	232	22	90	10	122	509	0
11:00 - 11:15	62	20	17	99	7	0	36	43	23	63	135	221	20	58	3	81	444	0
11:15 - 11:30	80	21	18	119	2	22	24	48	16	85	128	229	25	86	3	114	510	2
11:30 - 11:45	64	25	15	104	5	27	22	54	32	82	168	282	22	133	6	161	601	0
11:45 - 12:00	77	35	20	132	2	32	20	54	36	86	183	305	36	103	2	141	632	0
12:00 - 12:15	95	48	24	167	6	33	25	64	33	102	208	343	20	88	4	112	686	0
12:15 - 12:30	95	38	30	163	6	35	24	65	20	103	204	327	28	74	3	105	660	0
12:30 - 12:45	104	56	36	196	9	31	29	69	31	88	160	279	29	95	2	126	670	1
12:45 - 13:00	109	74	35	218	5	25	30	60	44	76	155	275	36	92	4	132	685	1
13:00 - 13:15	111	58	32	201	4	29	26	59	29	84	134	247	19	104	4	127	634	1
13:15 - 13:30	108	49	20	177	4	29	18	51	37	91	115	243	29	93	9	131	602	2
13:30 - 13:45	107	36	31	174	5	27	25	57	36	97	117	250	30	91	9	130	611	3
13:45 - 14:00	101	52	35	188	6	31	25	62	26	82	156	264	17	106	5	128	642	0
14:00 - 14:15	108	57	28	193	9	32	48	89	34	104	129	267	29	87	6	122	671	0
14:15 - 14:30	114	48	32	194	6	21	31	58	39	101	117	257	19	85	9	113	622	1
14:30 - 14:45	101	52	27	180	4	24	27	55	30	100	156	286	25	86	7	118	639	0
14:45 - 15:00	95	46	38	179	14	39	35	88	22	87	91	200	26	104	5	135	602	0
15:00 - 15:15	24	39	43	106	11	54	52	117	23	62	83	168	34	102	4	140	531	2
15:15 - 15:30	88	43	0	131	8	63	42	113	55	56	71	182	43	83	7	133	559	0
15:30 - 15:45	77	32	28	137	6	32	33	71	94	117	76	287	46	112	3	161	656	0
15:45 - 16:00	88	46	34	168	16	43	38	97	35	105	105	245	30	118	8	156	666	0
16:00 - 16:15	87	46	37	170	6	49	25	80	32	95	162	289	51	122	6	179	718	0
16:15 - 16:30	93	50	18	161	14	38	34	86	31	109	139	279	45	108	9	162	688	1
16:30 - 16:45	91	39	27	157	12	52	20	84	20	123	134	277	37	70	5	112	630	0
16:45 - 17:00	87	42	38	167	7	28	25	60	37	158	153	348	33	104	10	147	722	0
17:00 - 17:15	90	50	33	173	16	38	41	95	25	162	120	307	34	119	10	163	738	1
17:15 - 17:30	72	41	35	148	13	44	44	101	35	139	144	318	38	114	13	165	732	1
17:30 - 17:45	93	47	36	176	11	40	24	75	23	163	120	306	33	99	10	142	699	1
17:45 - 18:00	90	43	38	171	14	51	25	90	23	117	125	265	27	111	9	147	673	0
18:00 - 18:15	76	46	26	148	14	36	35	85	29	141	130	300	34	117	8	159	692	3
18:15 - 18:30	77	35	30	142	9	26	29	64	24	133	140	297	32	88	9	129	632	0
18:30 - 18:45	73	34	31	138	5	22	20	47	21	133	132	286	24	92	8	124	595	0
18:45 - 19:00	73	39	21	133	4	20	18	42	12	108	136	256	31	76	5	112	543	0
TOTAL	3461	1745	1104	6310	323	1317	1302	2942	1403	4320	5624	11347	1257	4780	292	6329	26928	26
Trucks	38	11	6	55	6	10	29	45	38	67	50	155	3	51	3	57	312	1.2%
School Buses	5	6	4	15	2	5	12	19	4	9	5	18	21	11	4	36	88	0.3%

TOTAL AND PEAK HOUR VOLUME DIAGRAMS

Piney Grove Rd AT Bower Pkwy-Jamil Rd Date: 11/21/2016

12.0 HOUR TOTAL VOLUME
FROM 7:00 TO 15:00

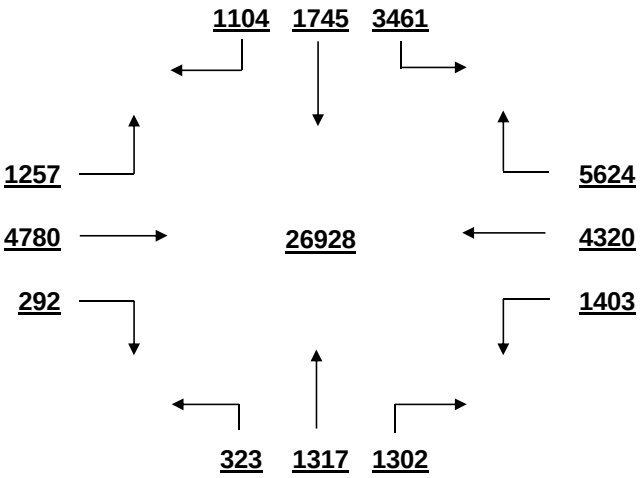

OVERALL PEAK HOUR VOLUME
FROM 16:45 TO 17:45

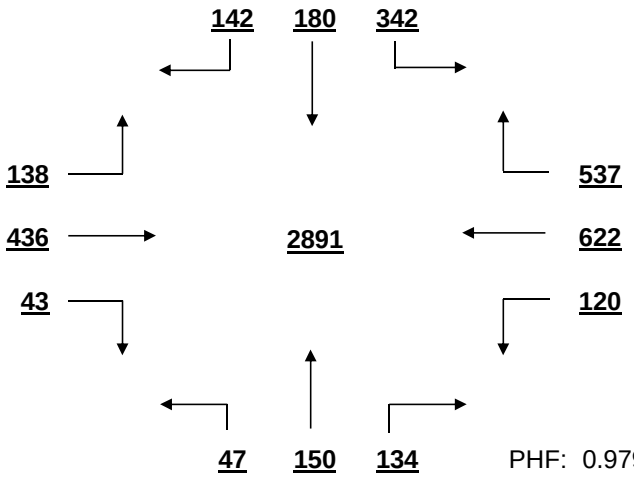

PHF: 0.979

AM PEAK HOUR VOLUME (0:00-10:45)
FROM 7:15 TO 8:15

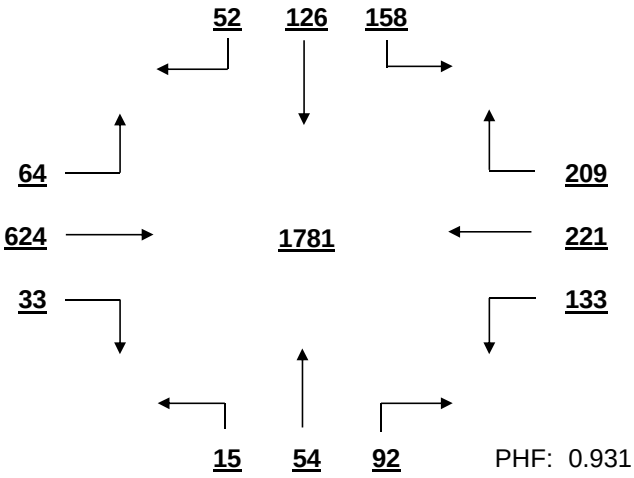

PHF: 0.931

PM PEAK HOUR VOLUME (14:15-23:45)
FROM 16:45 TO 17:45

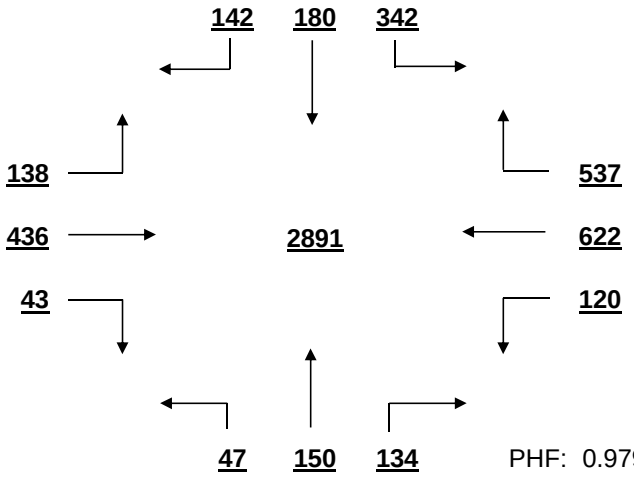

PHF: 0.979

MID-DAY PEAK HOUR VOLUME (11:00-14:00)
FROM 12:00 TO 13:00

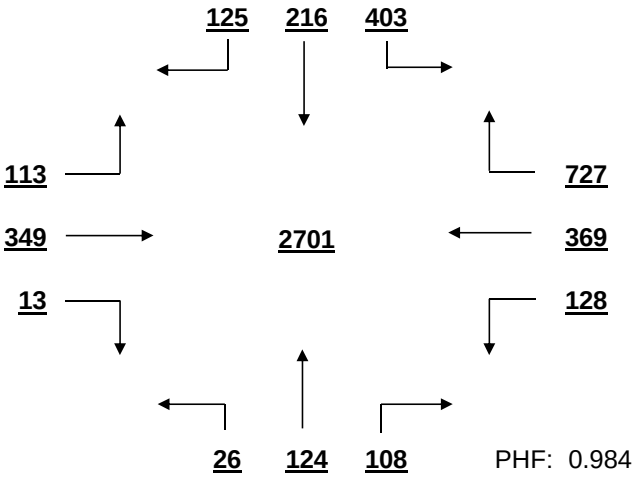

PHF: 0.984

OTHER HOUR VOLUME
FROM 7:00 TO 8:00

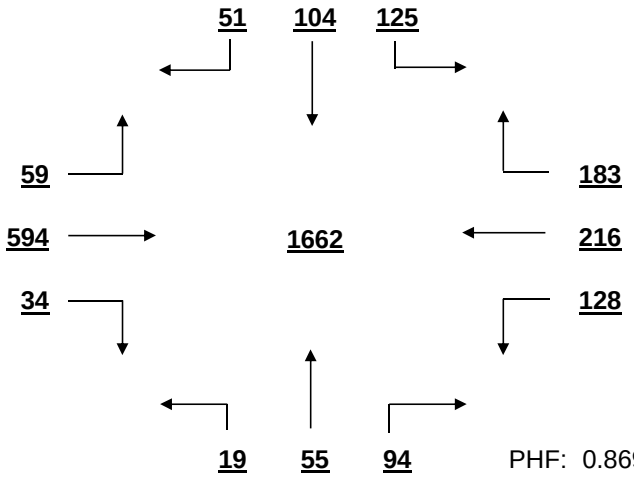

PHF: 0.869

SIGNAL WARRANT ANALYSIS

Piney Grove Rd AT Bower Pkwy-Jamil Rd Date: 11/21/2016

Minor Street Volume, percent of total = 34.4%
Percent of Left Turns from Minor Street = 40.9%
Percent of Right Turns from Minor Street = 26.0%
Percent of Minor Street Right Turns to Remove from Warrant Analysis = 0%
WARRANT BASIS = **100%**

Warrant No. 1 - Vehicular Volume is met

Condition A - Minimum Vehicular Volume is met

Average Major Street % of Warrant				Average Minor Street % of Warrant			
1473.0	/ 600	=	246%	525.8	/ 150	=	351%

Hourly percent of warrant

	7:00 - 8:00	8:00 - 9:00	9:00 - 10:00	10:00 - 11:00	11:00 - 12:00	12:00 - 13:00	13:00 - 14:00	14:00 - 15:00	15:00 - 16:00	16:00 - 17:00	17:00 - 18:00	18:00 - 19:00
Major St.	202%	192%	182%	205%	256%	283%	253%	250%	245%	299%	302%	277%
Minor St.	187%	209%	161%	244%	303%	496%	493%	497%	361%	437%	445%	374%

Condition B - Interruption to Continuous Traffic is met

Average Major Street % of Warrant				Average Minor Street % of Warrant			
1473.0	/ 900	=	164%	525.8	/ 75	=	701%

Hourly percent of warrant

	7:00 - 8:00	8:00 - 9:00	9:00 - 10:00	10:00 - 11:00	11:00 - 12:00	12:00 - 13:00	13:00 - 14:00	14:00 - 15:00	15:00 - 16:00	16:00 - 17:00	17:00 - 18:00	18:00 - 19:00
Major St.	135%	128%	121%	136%	170%	189%	169%	166%	164%	199%	201%	185%
Minor St.	373%	417%	321%	488%	605%	992%	987%	995%	723%	873%	891%	748%

80% Combination of Conditions A & B is met

Warrant No. 2 - Four Hour Vehicular Volume is met

Hourly percent of warrant

	7:00 - 8:00	8:00 - 9:00	9:00 - 10:00	10:00 - 11:00	11:00 - 12:00	12:00 - 13:00	13:00 - 14:00	14:00 - 15:00	15:00 - 16:00	16:00 - 17:00	17:00 - 18:00	18:00 - 19:00
Minor St.	275%	280%	197%	367%	568%	930%	925%	933%	678%	819%	835%	701%

Warrant No. 3 - Peak Hour is met

	Percent of warrant		Percent of warrant
Overall Peak Hour:	16:45 - 17:45	Higher Volume Side Street Peak Hour:	12:30 - 13:30
Minor St.	664%	Minor St.	626%

Warrant No. 4 - Pedestrian Volume. Pedestrian volume shown are minumum volumes assuming heavy major street traffic. If these volumes are met, warrant 4 requires further engineering analysis

Minimum 4 hour ped. volume crossing major street	Minimum peak hour ped. volume crossing major street
107	133

Number of pedestrians crossing major street

	7:00 - 8:00	8:00 - 9:00	9:00 - 10:00	10:00 - 11:00	11:00 - 12:00	12:00 - 13:00	13:00 - 14:00	14:00 - 15:00	15:00 - 16:00	16:00 - 17:00	17:00 - 18:00	18:00 - 19:00
Major St.	1	0	1	0	0	1	1	1	0	0	1	0

Warrant No. 7 - Crash Experience (Requires 3 criteria analysis by engineering)

Total Number: 0 From: 1/1/2005 to 1/1/2008
Accident Rate: 0.00 per million entering vehicles

Types of Accidents	No.	/	Avg.		No.	/	Avg.
Right Angle	0	/	0.0	Rear End	0	/	0.0
Lost Control	0	/	0.0	Side Swipe	0	/	0.0
Left Turn	0	/	0.0	Other	0	/	0.0

SOUTH CAROLINA DEPARTMENT OF TRANSPORTATION
DISTRICT 1
TRAFFIC ENGINEERING

County: Richland City: Columbia Date: 11/21/2016

Major Rt: Piney Grove Rd * Not on State System Minor Rt: Foxfire Dr-Country Walk Apts * Not on State System

Day of Week: Monday Weather: Clear Office: Short Counts JMS

Type of Control: Stop Sign Speed Limit (major st) 35

Direction of Minor Street: N-S Intersection ADT - 23840 (Calc)

Number of Lanes (major st)* 2 Number of Lanes (minor st)* 1 * Each Direction

INTERSECTION VOLUME SUMMARY

	From N Foxfire Dr-Country				From S Foxfire Dr-Country				From E Piney Grove Rd				From W Piney Grove Rd				Total	Total
	LT	STR	RT	TOT	LT	STR	RT	TOT	LT	STR	RT	TOT	LT	STR	RT	TOT	Vol	Peds
7:00 - 7:15	8	0	3	11	0	0	0	0	0	103	1	104	0	124	0	124	239	0
7:15 - 7:30	3	0	4	7	0	0	0	0	0	124	0	124	2	215	0	217	348	0
7:30 - 7:45	9	0	5	14	0	0	0	0	0	153	3	156	3	213	0	216	386	0
7:45 - 8:00	7	0	3	10	0	0	0	0	0	182	1	183	3	241	0	244	437	0
8:00 - 8:15	3	0	2	5	0	0	0	0	0	133	2	135	0	208	0	208	348	0
8:15 - 8:30	3	0	2	5	0	0	0	0	0	146	1	147	0	188	0	188	340	0
8:30 - 8:45	6	0	4	10	0	0	0	0	0	127	2	129	1	164	0	165	304	0
8:45 - 9:00	3	0	0	3	0	0	0	0	0	185	4	189	0	155	0	155	347	1
9:00 - 9:15	5	0	2	7	0	0	0	0	0	159	0	159	0	146	0	146	312	0
9:15 - 9:30	2	0	0	2	0	0	0	0	0	205	5	210	3	117	0	120	332	1
9:30 - 9:45	7	0	0	7	0	0	0	0	0	172	1	173	0	134	0	134	314	0
9:45 - 10:00	5	0	3	8	0	0	0	0	0	234	5	239	0	137	0	137	384	2
10:00 - 10:15	2	0	1	3	0	0	0	0	0	220	3	223	0	138	0	138	364	1
10:15 - 10:30	0	0	1	1	0	0	0	0	0	199	5	204	1	160	0	161	366	0
10:30 - 10:45	4	0	2	6	0	0	0	0	0	203	6	209	0	148	0	148	363	0
10:45 - 11:00	3	0	1	4	0	0	0	0	0	239	4	243	0	173	0	173	420	0
11:00 - 11:15	4	0	2	6	0	0	0	0	0	248	3	251	2	159	0	161	418	0
11:15 - 11:30	1	0	0	1	0	0	0	0	0	239	5	244	0	183	0	183	428	1
11:30 - 11:45	4	0	3	7	0	0	0	0	0	288	4	292	0	161	0	161	460	0
11:45 - 12:00	1	0	2	3	0	0	0	0	0	360	2	362	1	200	0	201	566	0
12:00 - 12:15	3	0	3	6	0	0	0	0	0	373	7	380	3	223	0	226	612	0
12:15 - 12:30	5	0	2	7	0	0	0	0	0	392	2	394	0	181	0	181	582	0
12:30 - 12:45	2	0	0	2	0	0	0	0	0	350	4	354	2	223	0	225	581	0
12:45 - 13:00	3	0	0	3	0	0	0	0	0	319	5	324	1	230	0	231	558	1
13:00 - 13:15	2	0	2	4	0	0	0	0	0	312	7	319	2	247	0	249	572	0
13:15 - 13:30	5	0	1	6	0	0	0	0	0	347	6	353	0	219	0	219	578	1
13:30 - 13:45	5	0	2	7	0	0	0	0	0	371	4	375	1	213	0	214	596	1
13:45 - 14:00	4	0	0	4	0	0	0	0	0	308	5	313	0	240	0	240	557	0
14:00 - 14:15	5	0	1	6	0	0	0	0	0	399	4	403	1	243	0	244	653	0
14:15 - 14:30	2	0	1	3	0	0	0	0	0	286	3	289	2	230	0	232	524	0
14:30 - 14:45	3	0	2	5	0	0	0	0	0	301	5	306	3	209	0	212	523	1
14:45 - 15:00	1	0	0	1	0	0	0	0	0	250	8	258	1	244	0	245	504	0
15:00 - 15:15	7	0	4	11	0	0	0	0	0	160	3	163	3	221	0	224	398	4
15:15 - 15:30	6	0	0	6	0	0	0	0	0	192	3	195	2	220	0	222	423	0
15:30 - 15:45	3	0	1	4	0	0	0	0	0	256	4	260	2	218	0	220	484	0
15:45 - 16:00	2	0	1	3	0	0	0	0	0	264	12	276	2	237	0	239	518	0
16:00 - 16:15	6	0	3	9	0	0	0	0	0	250	5	255	2	226	0	228	492	1
16:15 - 16:30	1	0	2	3	0	0	0	0	0	278	4	282	2	224	0	226	511	0
16:30 - 16:45	3	0	5	8	0	0	0	0	0	216	10	226	3	200	0	203	437	0
16:45 - 17:00	9	0	2	11	0	0	0	0	0	346	6	352	3	196	0	199	562	0
17:00 - 17:15	4	0	1	5	0	0	0	0	0	313	4	317	4	257	0	261	583	1
17:15 - 17:30	5	0	2	7	0	0	0	0	0	320	5	325	0	240	0	240	572	0
17:30 - 17:45	1	0	2	3	0	0	0	0	0	296	10	306	1	214	0	215	524	0
17:45 - 18:00	7	0	0	7	0	0	0	0	0	282	9	291	3	235	0	238	536	0
18:00 - 18:15	3	0	2	5	0	0	0	0	0	277	7	284	3	245	0	248	537	1
18:15 - 18:30	6	0	1	7	0	0	0	0	0	291	7	298	5	213	0	218	523	0
18:30 - 18:45	3	0	2	5	0	0	0	0	0	255	5	260	0	186	0	186	451	0
18:45 - 19:00	3	0	2	5	0	0	0	0	0	256	7	263	2	161	0	163	431	0
TOTAL	189	0	84	273	0	0	0	0	0	12179	218	12397	69	9559	0	9628	22298	17
Trucks	3	0	0	3	0	0	0	0	0	138	1	139	1	151	0	152	294	1.3%
School Buses	2	0	1	3	0	0	0	0	0	12	5	17	3	21	0	24	44	0.2%

TOTAL AND PEAK HOUR VOLUME DIAGRAMS

Piney Grove Rd AT Foxfire Dr-Country Walk Apts Date: 11/21/2016

12.0 HOUR TOTAL VOLUME
FROM 7:00 TO 15:00

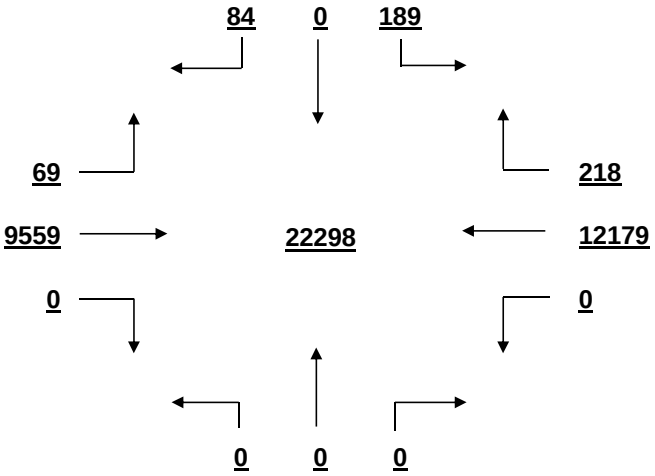

OVERALL PEAK HOUR VOLUME
FROM 13:15 TO 14:15

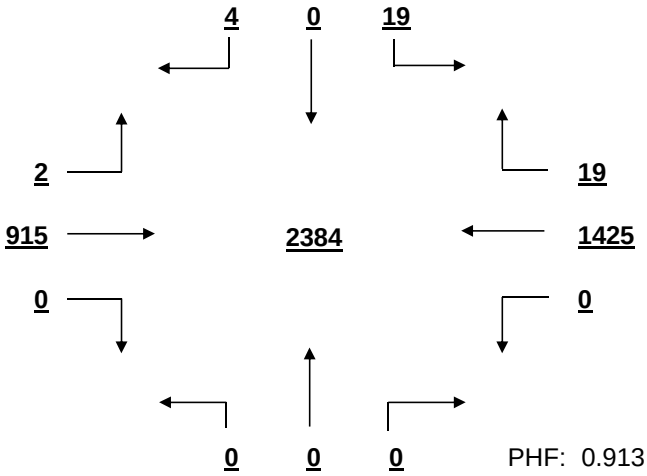

PHF: 0.913

AM PEAK HOUR VOLUME (0:00-10:45)
FROM 7:15 TO 8:15

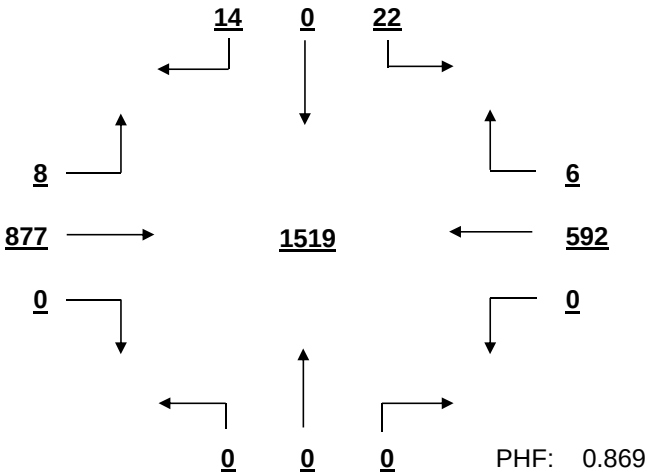

PHF: 0.869

PM PEAK HOUR VOLUME (14:15-23:45)
FROM 16:45 TO 17:45

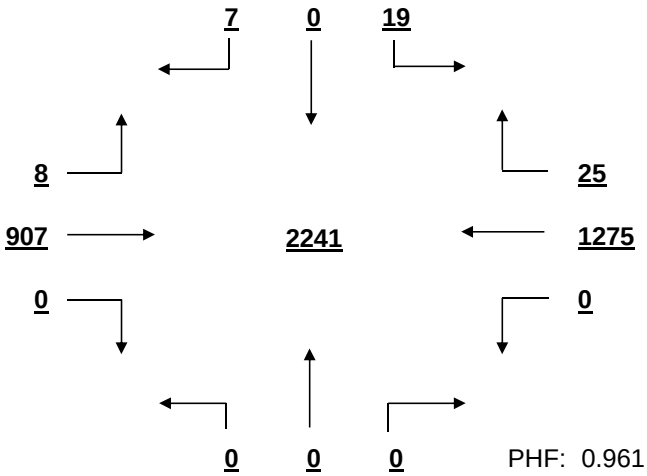

PHF: 0.961

MID-DAY PEAK HOUR VOLUME (11:00-14:00)
FROM 11:45 TO 12:45

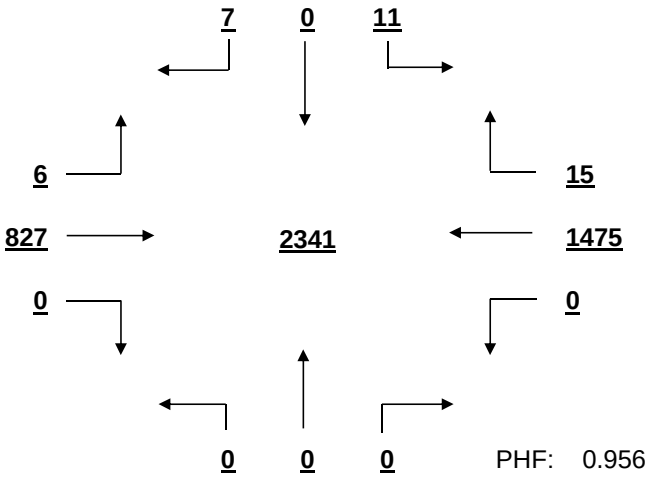

PHF: 0.956

OTHER HOUR VOLUME
FROM 7:00 TO 8:00

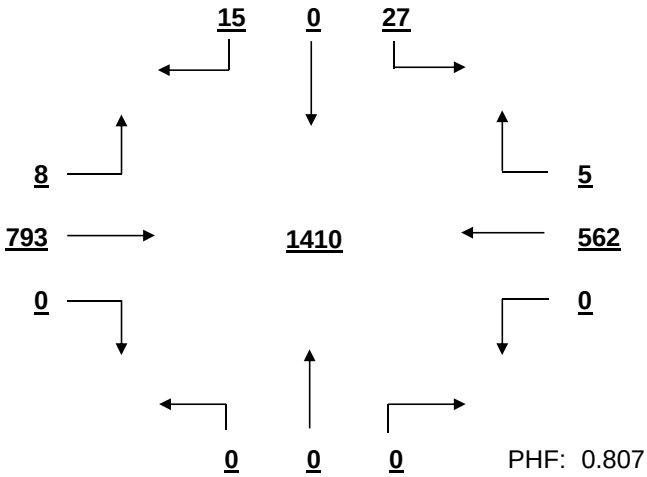

PHF: 0.807

SIGNAL WARRANT ANALYSIS

Piney Grove Rd AT Foxfire Dr-Country Walk Apts Date: 11/21/2016

Minor Street Volume, percent of total = 1.2%
Percent of Left Turns from Minor Street = 69.2%
Percent of Right Turns from Minor Street = 30.8%
Percent of Minor Street Right Turns to Remove from Warrant Analysis = 0%
WARRANT BASIS = **100%**

Warrant No. 1 - Vehicular Volume is not met

Condition A - Minimum Vehicular Volume is not met

Average Major Street % of Warrant				Average Minor Street % of Warrant			
1835.4	/	600	= 306%	22.8	/	150	= 15%

Hourly percent of warrant

	7:00 - 8:00	8:00 - 9:00	9:00 - 10:00	10:00 - 11:00	11:00 - 12:00	12:00 - 13:00	13:00 - 14:00	14:00 - 15:00	15:00 - 16:00	16:00 - 17:00	17:00 - 18:00	18:00 - 19:00
Major St.	228%	219%	220%	250%	309%	386%	380%	365%	300%	329%	366%	320%
Minor St.	28%	15%	16%	9%	11%	12%	14%	10%	16%	21%	15%	15%

Condition B - Interruption to Continuous Traffic is not met

Average Major Street % of Warrant				Average Minor Street % of Warrant			
1835.4	/	900	= 204%	22.8	/	75	= 30%

Hourly percent of warrant

	7:00 - 8:00	8:00 - 9:00	9:00 - 10:00	10:00 - 11:00	11:00 - 12:00	12:00 - 13:00	13:00 - 14:00	14:00 - 15:00	15:00 - 16:00	16:00 - 17:00	17:00 - 18:00	18:00 - 19:00
Major St.	152%	146%	146%	167%	206%	257%	254%	243%	200%	219%	244%	213%
Minor St.	56%	31%	32%	19%	23%	24%	28%	20%	32%	41%	29%	29%

80% Combination of Conditions A & B is not met

Warrant No. 2 - Four Hour Vehicular Volume is not met

Hourly percent of warrant

	7:00 - 8:00	8:00 - 9:00	9:00 - 10:00	10:00 - 11:00	11:00 - 12:00	12:00 - 13:00	13:00 - 14:00	14:00 - 15:00	15:00 - 16:00	16:00 - 17:00	17:00 - 18:00	18:00 - 19:00
Minor St.	53%	25%	27%	18%	21%	23%	26%	19%	30%	39%	28%	28%

Warrant No. 3 - Peak Hour is not met

Overall Peak Hour: 13:15 - 14:15 — Percent of warrant
Minor St. 23%

Higher Volume Side Street Peak Hour: 7:00 - 8:00 — Percent of warrant
Minor St. 25%

Warrant No. 4 - Pedestrian Volume. Pedestrian volume shown are minumum volumes assuming heavy major street traffic. If these volumes are met, warrant 4 requires further engineering analysis

Minimum 4 hour ped. volume crossing major street: 107

Minimum peak hour ped. volume crossing major street: 133

Number of pedestrians crossing major street

	7:00 - 8:00	8:00 - 9:00	9:00 - 10:00	10:00 - 11:00	11:00 - 12:00	12:00 - 13:00	13:00 - 14:00	14:00 - 15:00	15:00 - 16:00	16:00 - 17:00	17:00 - 18:00	18:00 - 19:00
Major St.	0	0	0	0	0	0	0	0	0	0	1	0

Warrant No. 7 - Crash Experience (Requires 3 criteria analysis by engineering)

Total Number: 0 From: 1/1/2005 to 1/1/2008
Accident Rate: 0.00 per million entering vehicles

Types of Accidents	No.	/	Avg.		No.	/	Avg.
Right Angle	0	/	0.0	Rear End	0	/	0.0
Lost Control	0	/	0.0	Side Swipe	0	/	0.0
Left Turn	0	/	0.0	Other	0	/	0.0

SOUTH CAROLINA DEPARTMENT OF TRANSPORTATION
DISTRICT 1
TRAFFIC ENGINEERING

County: Richland City: Columbia Date: 11/22/2016

Major Rt: Piney Grove Rd * Not on State System Minor Rt: Fernandina Rd * Not on State System

Day of Week: Tuesday Weather: Clear Office: Short Counts JMS

Type of Control: Signal Speed Limit (major st) 35

Direction of Minor Street: N-S Intersection ADT - 24530 (Calc)

Number of Lanes (major st)* 2 Number of Lanes (minor st)* 1

* Each Direction

INTERSECTION VOLUME SUMMARY

	From N Fernandina Rd				From S Fernandina Rd				From E Piney Grove Rd				From W Piney Grove Rd				Total	Total
	LT	STR	RT	TOT	LT	STR	RT	TOT	LT	STR	RT	TOT	LT	STR	RT	TOT	Vol	Peds
7:00 - 7:15	1	7	8	16	14	0	0	14	9	108	0	117	4	52	42	98	245	0
7:15 - 7:30	1	21	10	32	14	2	4	20	25	124	3	152	8	75	41	124	328	0
7:30 - 7:45	3	71	32	106	20	1	0	21	37	158	5	200	13	71	63	147	474	0
7:45 - 8:00	0	65	13	78	15	4	2	21	50	167	0	217	27	78	78	183	499	0
8:00 - 8:15	2	43	21	66	25	3	3	31	37	142	0	179	22	94	68	184	460	0
8:15 - 8:30	1	21	11	33	30	5	10	45	29	138	2	169	39	93	88	220	467	1
8:30 - 8:45	2	24	12	38	27	3	3	33	17	90	1	108	36	65	63	164	343	0
8:45 - 9:00	0	17	22	39	24	6	4	34	19	92	1	112	27	63	53	143	328	0
9:00 - 9:15	1	6	13	20	31	9	3	43	12	79	2	93	26	65	41	132	288	0
9:15 - 9:30	1	3	21	25	33	9	6	48	8	104	3	115	31	61	42	134	322	0
9:30 - 9:45	1	6	23	30	32	5	4	41	7	90	7	104	36	56	39	131	306	0
9:45 - 10:00	2	3	19	24	32	4	5	41	8	68	2	78	51	62	21	134	277	1
10:00 - 10:15	2	3	29	34	29	9	4	42	3	93	6	102	66	70	47	183	361	0
10:15 - 10:30	5	8	34	47	46	12	7	65	11	85	4	100	79	67	40	186	398	0
10:30 - 10:45	3	5	34	42	38	11	4	53	3	111	6	120	58	68	32	158	373	0
10:45 - 11:00	3	7	36	46	39	18	3	60	5	92	6	103	72	58	35	165	374	0
11:00 - 11:15	2	5	33	40	44	11	10	65	11	112	5	128	72	65	33	170	403	0
11:15 - 11:30	2	10	42	54	52	12	10	74	11	123	2	136	69	57	35	161	425	0
11:30 - 11:45	4	10	44	58	50	14	10	74	8	127	1	136	93	74	39	206	474	0
11:45 - 12:00	3	10	49	62	65	23	9	97	6	135	7	148	84	76	38	198	505	0
12:00 - 12:15	2	18	43	63	73	18	13	104	4	142	11	157	84	85	36	205	529	1
12:15 - 12:30	3	14	38	55	63	43	9	115	11	126	5	142	88	86	43	217	529	0
12:30 - 12:45	5	16	31	52	59	26	14	99	16	142	10	168	83	83	36	202	521	1
12:45 - 13:00	5	19	42	66	61	21	12	94	14	140	6	160	65	82	50	197	517	1
13:00 - 13:15	4	16	53	73	63	16	6	85	20	126	7	153	95	76	64	235	546	0
13:15 - 13:30	2	18	42	62	53	17	9	79	23	138	10	171	70	82	50	202	514	0
13:30 - 13:45	4	22	45	71	59	18	7	84	16	136	3	155	60	97	45	202	512	0
13:45 - 14:00	4	10	42	56	49	11	9	69	12	142	11	165	79	78	41	198	488	1
14:00 - 14:15	2	12	49	63	58	16	10	84	11	122	8	141	52	91	52	195	483	2
14:15 - 14:30	4	11	39	54	53	14	13	80	10	138	2	150	66	88	43	197	481	1
14:30 - 14:45	1	5	44	50	45	9	7	61	6	147	7	160	69	85	51	205	476	0
14:45 - 15:00	7	14	33	54	58	23	16	97	9	120	8	137	62	99	32	193	481	0
15:00 - 15:15	4	18	43	65	49	16	11	76	9	118	3	130	72	86	37	195	466	0
15:15 - 15:30	5	10	38	53	56	16	10	82	8	129	9	146	62	92	31	185	466	0
15:30 - 15:45	7	14	48	69	60	20	15	95	5	152	7	164	49	82	34	165	493	0
15:45 - 16:00	3	11	29	43	51	34	20	105	6	143	6	155	50	101	38	189	492	1
16:00 - 16:15	8	10	37	55	66	34	14	114	13	153	6	172	59	97	34	190	531	1
16:15 - 16:30	6	8	45	59	63	44	21	128	18	145	9	172	51	105	38	194	553	0
16:30 - 16:45	6	12	48	66	97	48	13	158	14	154	8	176	42	103	41	186	586	1
16:45 - 17:00	5	22	27	54	88	41	24	153	17	155	5	177	63	106	49	218	602	0
17:00 - 17:15	5	9	76	90	129	64	29	222	8	176	7	191	47	96	33	176	679	0
17:15 - 17:30	10	14	42	66	82	36	25	143	7	144	16	167	40	132	38	210	586	0
17:30 - 17:45	8	23	35	66	94	37	32	163	11	138	7	156	45	104	42	191	576	0
17:45 - 18:00	9	22	38	69	81	47	27	155	12	133	8	153	51	106	36	193	570	1
18:00 - 18:15	2	38	30	70	72	71	27	170	19	157	1	177	33	117	42	192	609	0
18:15 - 18:30	5	40	31	76	65	65	19	149	20	153	4	177	37	116	48	201	603	0
18:30 - 18:45	5	40	34	79	61	61	23	145	42	146	7	195	43	116	49	208	627	0
18:45 - 19:00	4	28	31	63	58	58	23	139	64	140	6	210	26	95	43	164	576	0
TOTAL	174	839	1639	2652	2526	1085	559	4170	741	6193	260	7194	2556	4056	2114	8726	22742	13
Trucks	3	6	0	9	37	7	2	46	9	33	2	44	31	35	26	92	191	0.8%
School Buses	0	1	2	3	9	0	1	10	3	10	1	14	5	10	8	23	50	0.2%

TOTAL AND PEAK HOUR VOLUME DIAGRAMS

Piney Grove Rd AT Fernandina Rd Date: 11/22/2016

12.0 HOUR TOTAL VOLUME
FROM 7:00 TO 15:00

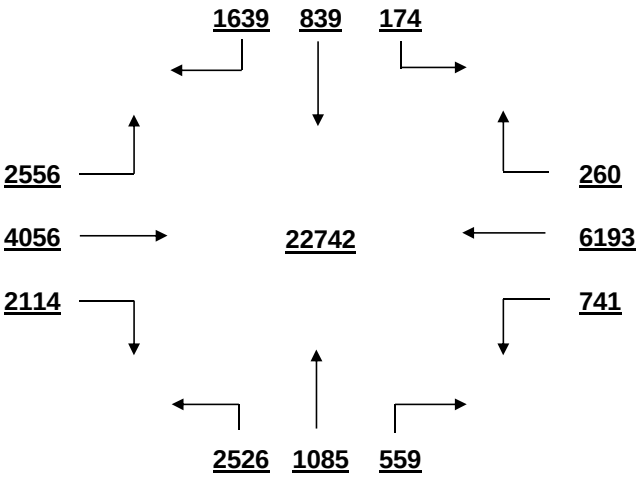

OVERALL PEAK HOUR VOLUME
FROM 16:30 TO 17:30

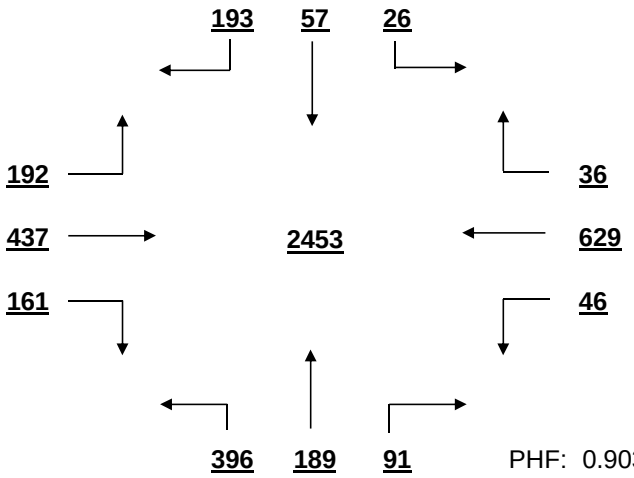

PHF: 0.903

AM PEAK HOUR VOLUME (0:00-10:45)
FROM 7:30 TO 8:30

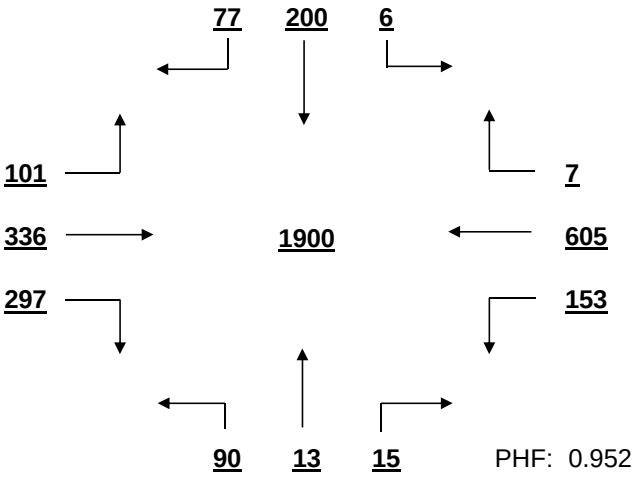

PHF: 0.952

PM PEAK HOUR VOLUME (14:15-23:45)
FROM 16:30 TO 17:30

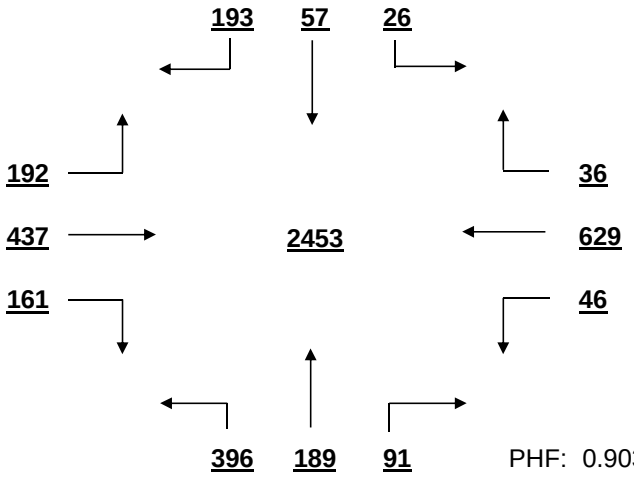

PHF: 0.903

MID-DAY PEAK HOUR VOLUME (11:00-14:00)
FROM 12:15 TO 13:15

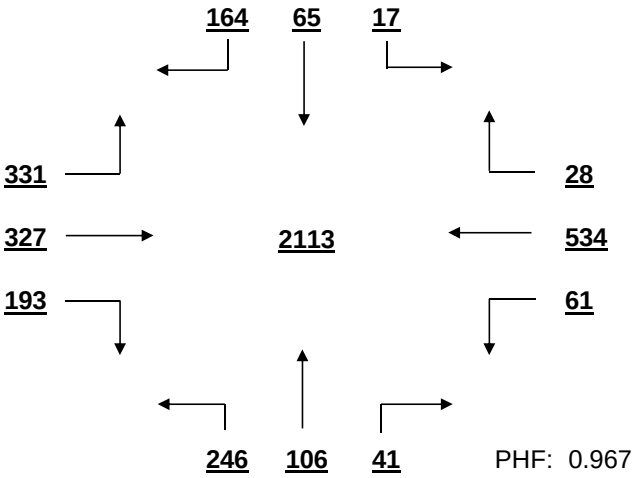

PHF: 0.967

OTHER HOUR VOLUME
FROM 7:00 TO 8:00

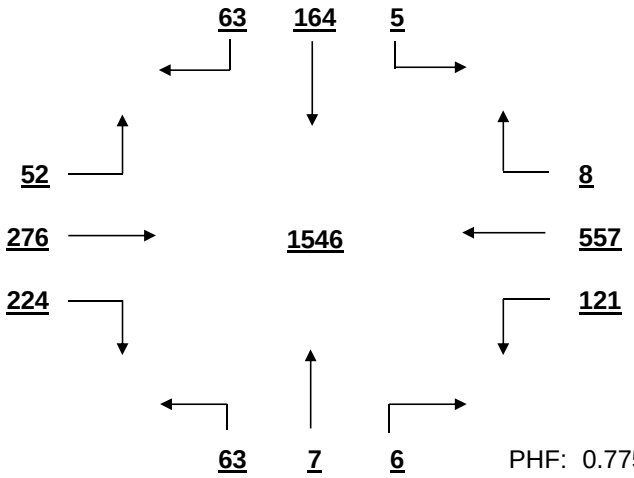

PHF: 0.775

SIGNAL WARRANT ANALYSIS

Piney Grove Rd AT Fernandina Rd Date: 11/22/2016

Minor Street Volume, percent of total = 30.0%
Percent of Left Turns from Minor Street = 39.6%
Percent of Right Turns from Minor Street = 32.2%
Percent of Minor Street Right Turns to Remove from Warrant Analysis = 0%
WARRANT BASIS = **100%**

Warrant No. 1 - Vehicular Volume is met

Condition A - Minimum Vehicular Volume is met

Average Major Street % of Warrant				Average Minor Street % of Warrant			
1326.7	/ 600	=	221%	347.5	/ 150	=	232%

Hourly percent of warrant

	7:00 - 8:00	8:00 - 9:00	9:00 - 10:00	10:00 - 11:00	11:00 - 12:00	12:00 - 13:00	13:00 - 14:00	14:00 - 15:00	15:00 - 16:00	16:00 - 17:00	17:00 - 18:00	18:00 - 19:00
Major St.	206%	213%	154%	186%	214%	241%	247%	230%	222%	248%	240%	254%
Minor St.	155%	117%	115%	147%	207%	275%	211%	215%	239%	369%	455%	402%

Condition B - Interruption to Continuous Traffic is met

Average Major Street % of Warrant				Average Minor Street % of Warrant			
1326.7	/ 900	=	147%	347.5	/ 75	=	463%

Hourly percent of warrant

	7:00 - 8:00	8:00 - 9:00	9:00 - 10:00	10:00 - 11:00	11:00 - 12:00	12:00 - 13:00	13:00 - 14:00	14:00 - 15:00	15:00 - 16:00	16:00 - 17:00	17:00 - 18:00	18:00 - 19:00
Major St.	138%	142%	102%	124%	143%	161%	165%	153%	148%	165%	160%	169%
Minor St.	309%	235%	231%	293%	413%	549%	423%	429%	477%	737%	911%	804%

80% Combination of Conditions A & B is met

Warrant No. 2 - Four Hour Vehicular Volume is met

Hourly percent of warrant

	7:00 - 8:00	8:00 - 9:00	9:00 - 10:00	10:00 - 11:00	11:00 - 12:00	12:00 - 13:00	13:00 - 14:00	14:00 - 15:00	15:00 - 16:00	16:00 - 17:00	17:00 - 18:00	18:00 - 19:00
Minor St.	236%	188%	105%	187%	332%	515%	396%	403%	401%	691%	854%	754%

Warrant No. 3 - Peak Hour is met

	Percent of warrant		Percent of warrant
Overall Peak Hour:	16:30 - 17:30	Higher Volume Side Street Peak Hour:	17:00 - 18:00
Minor St.	490%	Minor St.	451%

Warrant No. 4 - Pedestrian Volume. Pedestrian volume shown are minumum volumes assuming heavy major street traffic. If these volumes are met, warrant 4 requires further engineering analysis

Minimum 4 hour ped. volume crossing major street: 107

Minimum peak hour ped. volume crossing major street: 133

Number of pedestrians crossing major street

	7:00 - 8:00	8:00 - 9:00	9:00 - 10:00	10:00 - 11:00	11:00 - 12:00	12:00 - 13:00	13:00 - 14:00	14:00 - 15:00	15:00 - 16:00	16:00 - 17:00	17:00 - 18:00	18:00 - 19:00
Major St.	0	1	0	0	0	3	1	2	1	1	1	0

Warrant No. 7 - Crash Experience (Requires 3 criteria analysis by engineering)

Total Number: 0 From: 1/1/2005 to 1/1/2008
Accident Rate: 0.00 per million entering vehicles

Types of Accidents	No.	/	Avg.		No.	/	Avg.
Right Angle	0	/	0.0	Rear End	0	/	0.0
Lost Control	0	/	0.0	Side Swipe	0	/	0.0
Left Turn	0	/	0.0	Other	0	/	0.0

SOUTH CAROLINA DEPARTMENT OF TRANSPORTATION
DISTRICT 1
TRAFFIC ENGINEERING

County: Richland City: Columbia Date: 11/22/2016

Major Rt: Piney Grove Rd * Not on State System Minor Rt: Piney Woods Rd * Not on State System

Day of Week: Tuesday Weather: Clear Office: Short Counts JMS

Type of Control: Other Speed Limit (major st) 35

Direction of Minor Street: N-S Intersection ADT - 12950 (Calc)

Number of Lanes (major st)* 2 Number of Lanes (minor st)* 1 * Each Direction

INTERSECTION VOLUME SUMMARY

	From N Piney Woods Rd				From S Piney Woods Rd				From E Piney Grove Rd				From W Piney Grove Rd				Total	Total
	LT	STR	RT	TOT	LT	STR	RT	TOT	LT	STR	RT	TOT	LT	STR	RT	TOT	Vol	Peds
7:00 - 7:15	1	3	82	86	9	0	0	9	0	36	3	39	14	36	9	59	193	0
7:15 - 7:30	2	4	108	114	11	2	0	13	1	31	4	36	30	37	10	77	240	0
7:30 - 7:45	5	6	142	153	13	2	0	15	0	51	3	54	28	41	10	79	301	0
7:45 - 8:00	3	3	127	133	13	3	0	16	1	52	4	57	31	42	17	90	296	0
8:00 - 8:15	3	5	121	129	5	2	0	7	0	36	3	39	32	46	10	88	263	0
8:15 - 8:30	5	4	102	111	8	2	1	11	0	32	2	34	23	65	15	103	259	0
8:30 - 8:45	1	5	69	75	7	2	0	9	0	26	2	28	19	34	6	59	171	0
8:45 - 9:00	2	2	61	65	16	0	0	16	0	30	4	34	27	27	13	67	182	0
9:00 - 9:15	3	5	123	131	6	4	0	10	0	35	3	38	24	35	12	71	250	0
9:15 - 9:30	5	4	104	113	7	2	0	9	0	38	3	41	32	24	4	60	223	1
9:30 - 9:45	3	3	71	77	11	3	0	14	0	39	2	41	32	25	10	67	199	0
9:45 - 10:00	2	2	61	65	6	3	0	9	0	30	5	35	30	28	15	73	182	0
10:00 - 10:15	1	4	67	72	9	2	0	11	1	40	6	47	37	19	11	67	197	0
10:15 - 10:30	1	2	41	44	12	1	3	16	1	34	3	38	37	27	14	78	176	0
10:30 - 10:45	3	1	45	49	11	5	2	18	0	29	6	35	32	26	6	64	166	0
10:45 - 11:00	7	2	40	49	6	4	1	11	1	36	2	39	31	22	13	66	165	0
11:00 - 11:15	5	2	50	57	6	2	0	8	0	46	4	50	35	23	14	72	187	0
11:15 - 11:30	2	6	51	59	11	0	1	12	0	28	4	32	36	26	5	67	170	0
11:30 - 11:45	2	3	48	53	15	3	0	18	0	44	7	51	44	30	10	84	206	0
11:45 - 12:00	3	4	46	53	6	1	0	7	0	51	3	54	33	41	13	87	201	0
12:00 - 12:15	5	1	63	69	11	4	0	15	0	45	14	59	48	41	9	98	241	0
12:15 - 12:30	2	2	43	47	11	1	0	12	0	56	5	61	37	48	13	98	218	0
12:30 - 12:45	6	5	48	59	7	3	0	10	1	49	5	55	49	43	16	108	232	0
12:45 - 13:00	10	1	51	62	13	5	0	18	1	46	6	53	41	52	10	103	236	0
13:00 - 13:15	5	4	54	63	10	3	1	14	2	44	5	51	39	36	7	82	210	0
13:15 - 13:30	5	5	40	50	11	2	1	14	1	33	5	39	42	38	17	97	200	0
13:30 - 13:45	3	4	51	58	15	3	0	18	2	52	7	61	48	41	16	105	242	1
13:45 - 14:00	2	4	49	55	19	4	2	25	1	45	9	55	33	41	13	87	222	0
14:00 - 14:15	6	2	44	52	12	1	2	15	0	52	3	55	57	48	13	118	240	0
14:15 - 14:30	8	3	50	61	21	2	0	23	0	38	7	45	55	46	18	119	248	0
14:30 - 14:45	4	2	56	62	13	3	0	16	2	55	6	63	37	43	9	89	230	0
14:45 - 15:00	6	0	46	52	15	5	2	22	0	43	6	49	61	47	13	121	244	0
15:00 - 15:15	3	4	32	39	5	3	1	9	0	55	7	62	54	43	7	104	214	0
15:15 - 15:30	6	4	45	55	9	4	0	13	1	49	5	55	54	44	16	114	237	0
15:30 - 15:45	4	2	47	53	18	3	2	23	0	80	12	92	57	38	8	103	271	0
15:45 - 16:00	7	4	45	56	11	1	0	12	0	49	5	54	56	44	13	113	235	0
16:00 - 16:15	8	3	62	73	23	1	0	24	1	74	4	79	63	33	17	113	289	0
16:15 - 16:30	7	4	58	69	15	3	0	18	0	64	4	68	62	40	15	117	272	0
16:30 - 16:45	5	3	57	65	16	8	0	24	0	70	12	82	62	42	20	124	295	0
16:45 - 17:00	7	2	49	58	20	5	2	27	0	83	5	88	70	43	18	131	304	0
17:00 - 17:15	5	4	73	82	8	9	0	17	0	84	13	97	76	42	17	135	331	0
17:15 - 17:30	7	9	53	69	21	6	1	28	0	67	12	79	80	50	25	155	331	0
17:30 - 17:45	5	6	57	68	21	3	0	24	0	39	5	44	74	42	25	141	277	0
17:45 - 18:00	7	6	66	79	16	8	0	24	0	52	4	56	83	36	16	135	294	0
18:00 - 18:15	5	5	71	81	15	4	1	20	0	61	12	73	76	45	21	142	316	0
18:15 - 18:30	4	7	87	98	18	2	0	20	0	55	4	59	74	40	29	143	320	0
18:30 - 18:45	8	5	83	96	19	6	1	26	0	51	11	62	72	51	25	148	332	0
18:45 - 19:00	2	3	93	98	28	3	1	32	1	67	9	77	76	29	15	120	327	0
TOTAL	211	174	3132	3517	609	148	25	782	18	2302	275	2595	2243	1840	658	4741	11635	2
Trucks	6	4	21	31	1	1	2	4	1	18	4	23	18	16	6	40	98	0.8%
School Buses	0	0	4	4	5	2	2	9	0	2	4	6	8	1	0	9	28	0.2%

TOTAL AND PEAK HOUR VOLUME DIAGRAMS

Piney Grove Rd AT Piney Woods Rd Date: 11/22/2016

12.0 HOUR TOTAL VOLUME
FROM 7:00 TO 15:00

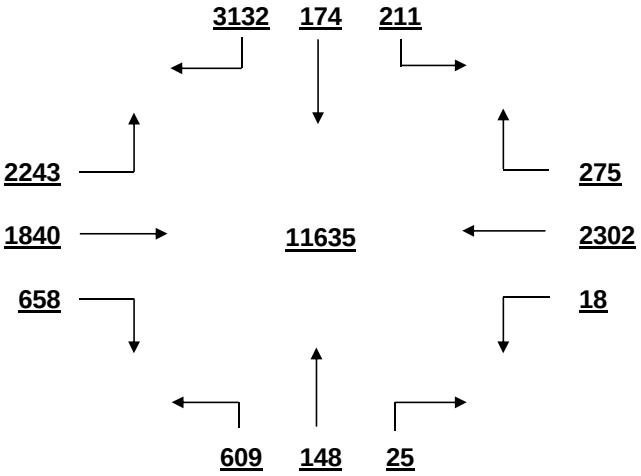

OVERALL PEAK HOUR VOLUME
FROM 18:00 TO 19:00

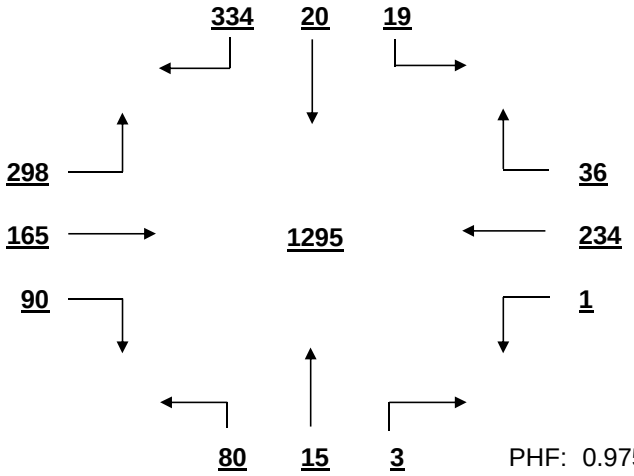

PHF: 0.975

AM PEAK HOUR VOLUME (0:00-10:45)
FROM 7:30 TO 8:30

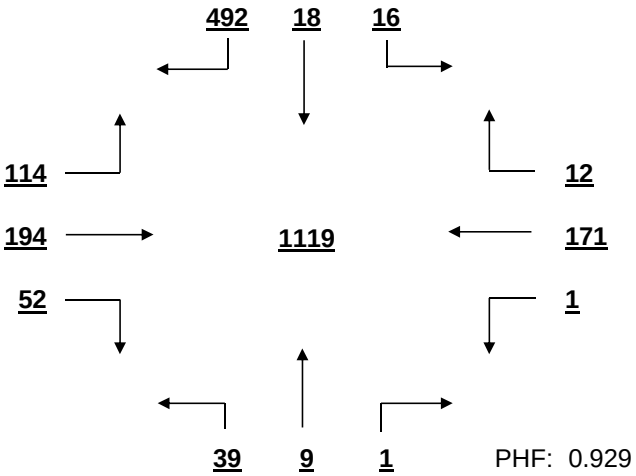

PHF: 0.929

PM PEAK HOUR VOLUME (14:15-23:45)
FROM 18:00 TO 19:00

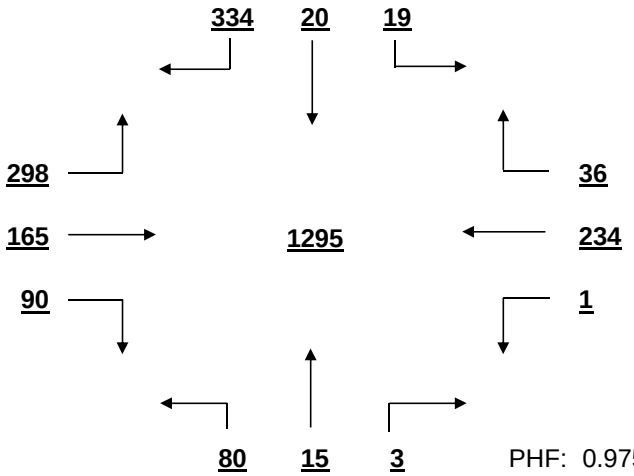

PHF: 0.975

MID-DAY PEAK HOUR VOLUME (11:00-14:00)
FROM 12:00 TO 13:00

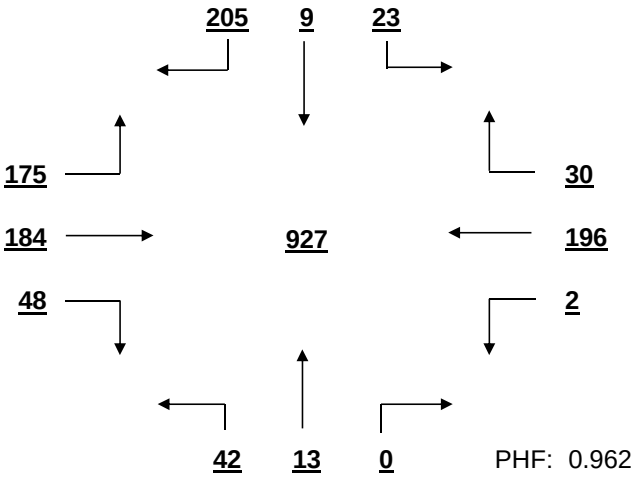

PHF: 0.962

OTHER HOUR VOLUME
FROM 7:00 TO 8:00

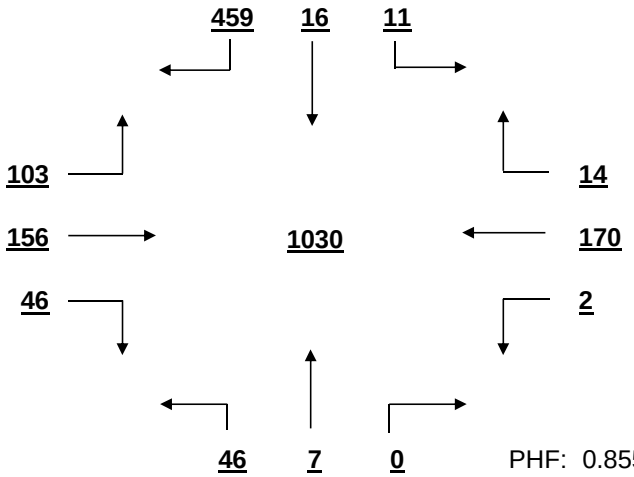

PHF: 0.855

SIGNAL WARRANT ANALYSIS

Piney Grove Rd AT Piney Woods Rd Date: 11/22/2016

Minor Street Volume, percent of total = 36.9%
Percent of Left Turns from Minor Street = 19.1%
Percent of Right Turns from Minor Street = 73.4%
Percent of Minor Street Right Turns to Remove from Warrant Analysis = 0%
WARRANT BASIS = **100%**

Warrant No. 1 - Vehicular Volume is not met

Condition A - Minimum Vehicular Volume is not met

Average Major Street % of Warrant				Average Minor Street % of Warrant			
611.3	/ 600	=	102%	293.1	/ 150	=	195%

Hourly percent of warrant

	7:00 - 8:00	8:00 - 9:00	9:00 - 10:00	10:00 - 11:00	11:00 - 12:00	12:00 - 13:00	13:00 - 14:00	14:00 - 15:00	15:00 - 16:00	16:00 - 17:00	17:00 - 18:00	18:00 - 19:00
Major St.	82%	75%	71%	72%	83%	106%	96%	110%	116%	134%	140%	137%
Minor St.	324%	253%	257%	143%	148%	158%	151%	151%	135%	177%	199%	249%

Condition B - Interruption to Continuous Traffic is not met

Average Major Street % of Warrant				Average Minor Street % of Warrant			
611.3	/ 900	=	68%	293.1	/ 75	=	391%

Hourly percent of warrant

	7:00 - 8:00	8:00 - 9:00	9:00 - 10:00	10:00 - 11:00	11:00 - 12:00	12:00 - 13:00	13:00 - 14:00	14:00 - 15:00	15:00 - 16:00	16:00 - 17:00	17:00 - 18:00	18:00 - 19:00
Major St.	55%	50%	47%	48%	55%	71%	64%	73%	77%	89%	94%	92%
Minor St.	648%	507%	515%	285%	296%	316%	301%	303%	271%	353%	397%	497%

80% Combination of Conditions A & B is not met

Warrant No. 2 - Four Hour Vehicular Volume is met

Hourly percent of warrant

	7:00 - 8:00	8:00 - 9:00	9:00 - 10:00	10:00 - 11:00	11:00 - 12:00	12:00 - 13:00	13:00 - 14:00	14:00 - 15:00	15:00 - 16:00	16:00 - 17:00	17:00 - 18:00	18:00 - 19:00
Minor St.	143%	105%	103%	58%	66%	88%	76%	87%	83%	130%	157%	191%

Warrant No. 3 - Peak Hour is met

	Percent of warrant		Percent of warrant
Overall Peak Hour:	18:00 - 19:00	Higher Volume Side Street Peak Hour:	7:15 - 8:15
Minor St.	104%	Minor St.	104%

Warrant No. 4 - Pedestrian Volume. Pedestrian volume shown are minumum volumes assuming heavy major street traffic. If these volumes are met, warrant 4 requires further engineering analysis

Minimum 4 hour ped. volume crossing major street: 107

Minimum peak hour ped. volume crossing major street: 133

Number of pedestrians crossing major street

	7:00 - 8:00	8:00 - 9:00	9:00 - 10:00	10:00 - 11:00	11:00 - 12:00	12:00 - 13:00	13:00 - 14:00	14:00 - 15:00	15:00 - 16:00	16:00 - 17:00	17:00 - 18:00	18:00 - 19:00
Major St.	0	0	1	0	0	0	0	0	0	0	0	0

Warrant No. 7 - Crash Experience (Requires 3 criteria analysis by engineering)

Total Number: 0 From: 1/1/2005 to 1/1/2008
Accident Rate: 0.00 per million entering vehicles

Types of Accidents	No.	/	Avg.		No.	/	Avg.
Right Angle	0	/	0.0	Rear End	0	/	0.0
Lost Control	0	/	0.0	Side Swipe	0	/	0.0
Left Turn	0	/	0.0	Other	0	/	0.0

SOUTH CAROLINA DEPARTMENT OF TRANSPORTATION
DISTRICT 1
TRAFFIC ENGINEERING

County: Richland City: Columbia Date: 11/22/2016

Major Rt: Jamil Rd * Not on State System Minor Rt: Tram Rd * Not on State System

Day of Week: Tuesday Weather: Clear Office: Short Counts JMS

Type of Control: Stop Sign Speed Limit (major st) 35

Direction of Minor Street: E-W Intersection ADT - 8960 (Calc)

Number of Lanes (major st)* 1 Number of Lanes (minor st)* 1

* Each Direction

INTERSECTION VOLUME SUMMARY

	From N Jamil Rd				From S Jamil Rd				From E Tram Rd				From W Tram Rd				Total	Total
	LT	STR	RT	TOT	LT	STR	RT	TOT	LT	STR	RT	TOT	LT	STR	RT	TOT	Vol	Peds
7:00 - 7:15	0	7	4	11	3	6	0	9	0	0	0	0	12	0	4	16	36	1
7:15 - 7:30	0	37	7	44	1	18	0	19	0	0	0	0	15	0	6	21	84	0
7:30 - 7:45	0	46	3	49	2	22	0	24	0	0	0	0	18	0	10	28	101	0
7:45 - 8:00	0	54	7	61	4	19	0	23	0	0	0	0	4	0	14	18	102	0
8:00 - 8:15	0	56	13	69	2	16	0	18	0	0	0	0	16	0	12	28	115	0
8:15 - 8:30	0	38	8	46	1	16	0	17	0	0	0	0	9	0	4	13	76	0
8:30 - 8:45	0	28	10	38	2	14	0	16	0	0	0	0	10	0	4	14	68	0
8:45 - 9:00	0	24	7	31	3	25	0	28	0	0	0	0	20	0	8	28	87	0
9:00 - 9:15	0	17	4	21	7	16	0	23	0	0	0	0	14	0	5	19	63	0
9:15 - 9:30	0	14	7	21	3	21	0	24	0	0	0	0	10	0	6	16	61	0
9:30 - 9:45	0	11	3	14	1	24	0	25	0	0	0	0	14	0	3	17	56	0
9:45 - 10:00	0	20	12	32	4	23	0	27	0	0	0	0	13	0	2	15	74	0
10:00 - 10:15	0	16	4	20	2	21	0	23	0	0	0	0	20	0	6	26	69	0
10:15 - 10:30	0	24	10	34	0	15	0	15	0	0	0	0	7	0	4	11	60	0
10:30 - 10:45	0	20	7	27	8	22	0	30	0	0	0	0	12	0	2	14	71	0
10:45 - 11:00	0	13	15	28	2	27	0	29	0	0	0	0	17	0	5	22	79	0
11:00 - 11:15	0	18	13	31	5	27	0	32	0	0	0	0	15	0	4	19	82	0
11:15 - 11:30	0	24	11	35	3	27	0	30	0	0	0	0	12	0	7	19	84	0
11:30 - 11:45	0	19	25	44	3	31	0	34	0	0	0	0	10	0	10	20	98	0
11:45 - 12:00	0	21	15	36	4	34	0	38	0	0	0	0	13	0	4	17	91	0
12:00 - 12:15	0	34	14	48	11	36	0	47	0	0	0	0	10	0	6	16	111	0
12:15 - 12:30	0	44	11	55	5	37	1	43	0	0	0	0	21	0	6	27	125	0
12:30 - 12:45	0	47	19	66	4	39	0	43	0	0	0	0	12	0	7	19	128	0
12:45 - 13:00	0	54	12	66	5	34	0	39	0	0	0	0	16	0	4	20	125	0
13:00 - 13:15	0	67	14	81	4	28	0	32	0	0	0	0	14	0	2	16	129	0
13:15 - 13:30	0	53	16	69	3	40	0	43	0	0	0	0	11	0	7	18	130	0
13:30 - 13:45	0	52	19	71	7	34	0	41	0	0	0	0	23	0	5	28	140	0
13:45 - 14:00	0	47	14	61	5	32	0	37	0	0	0	0	17	0	7	24	122	0
14:00 - 14:15	0	50	10	60	4	42	0	46	0	0	0	0	15	0	3	18	124	0
14:15 - 14:30	0	61	26	87	6	35	0	41	0	0	0	0	10	0	1	11	139	0
14:30 - 14:45	0	49	14	63	10	48	0	58	0	0	0	0	27	0	4	31	152	0
14:45 - 15:00	0	36	16	52	9	51	0	60	0	0	0	0	26	0	6	32	144	0
15:00 - 15:15	0	45	19	64	4	44	0	48	0	0	0	0	14	0	6	20	132	0
15:15 - 15:30	0	34	28	62	4	47	0	51	0	0	0	0	10	0	3	13	126	0
15:30 - 15:45	0	45	23	68	8	40	0	48	0	0	0	0	23	0	3	26	142	0
15:45 - 16:00	0	42	20	62	8	53	0	61	0	0	0	0	15	0	3	18	141	0
16:00 - 16:15	0	41	19	60	10	44	0	54	0	0	0	0	12	0	4	16	130	0
16:15 - 16:30	0	52	28	80	17	49	0	66	0	0	0	0	14	0	7	21	167	0
16:30 - 16:45	0	59	25	84	19	66	0	85	0	0	0	0	17	0	3	20	189	0
16:45 - 17:00	0	75	23	98	13	53	0	66	0	0	0	0	12	0	4	16	180	0
17:00 - 17:15	0	67	24	91	10	52	0	62	0	0	0	0	14	0	9	23	176	0
17:15 - 17:30	0	89	31	120	6	44	0	50	0	0	0	0	12	0	6	18	188	0
17:30 - 17:45	0	90	24	114	19	59	0	78	0	0	0	0	18	0	4	22	214	0
17:45 - 18:00	0	94	20	114	12	53	0	65	0	0	0	0	12	0	6	18	197	0
18:00 - 18:15	0	95	21	116	14	58	0	72	0	0	0	0	14	0	2	16	204	0
18:15 - 18:30	0	117	26	143	16	66	0	82	0	0	0	0	19	0	2	21	246	0
18:30 - 18:45	0	111	24	135	10	62	0	72	0	0	0	0	16	0	5	21	228	0
18:45 - 19:00	0	124	18	142	5	52	0	57	0	0	0	0	17	0	2	19	218	0
TOTAL	0	2281	743	3024	308	1722	1	2031	0	0	0	0	702	0	247	949	6004	1
Trucks	0	12	1	13	5	8	0	13	0	0	0	0	5	0	1	6	32	0.5%
School Buses	0	5	4	9	0	3	0	3	0	0	0	0	2	0	5	7	19	0.3%

TOTAL AND PEAK HOUR VOLUME DIAGRAMS

Jamil Rd AT Tram Rd Date: 11/22/2016

12.0 HOUR TOTAL VOLUME
FROM 7:00 TO 15:00

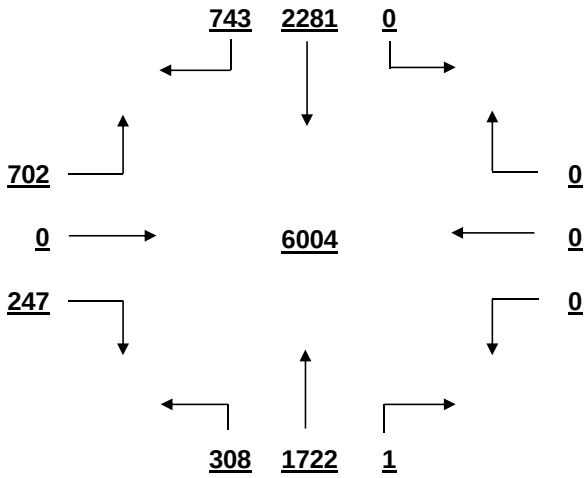

OVERALL PEAK HOUR VOLUME
FROM 18:00 TO 19:00

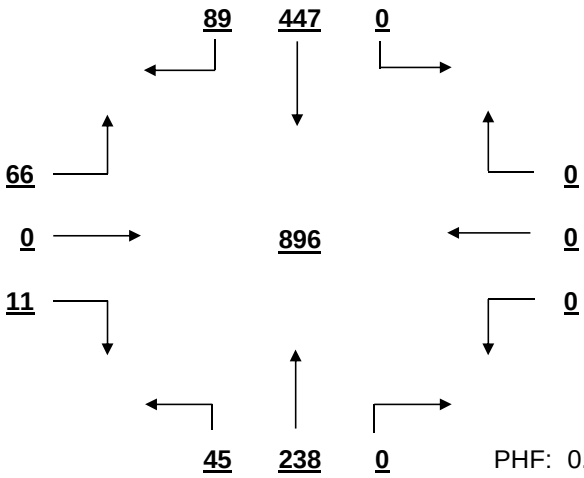

PHF: 0.911

AM PEAK HOUR VOLUME (0:00-10:45)
FROM 7:15 TO 8:15

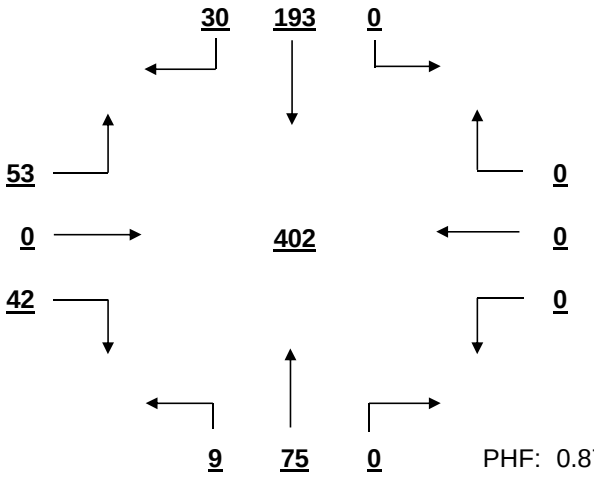

PHF: 0.874

PM PEAK HOUR VOLUME (14:15-23:45)
FROM 18:00 TO 19:00

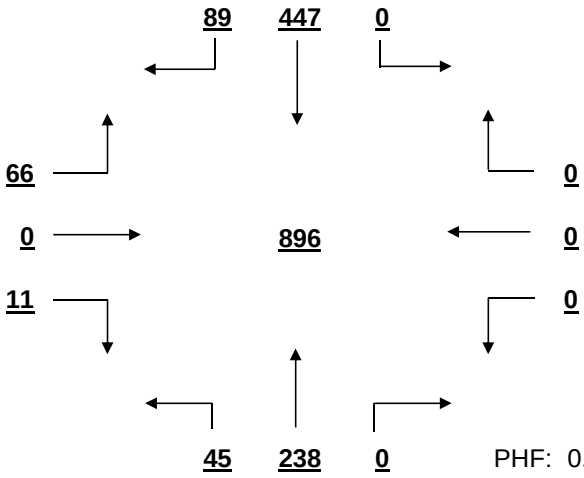

PHF: 0.911

MID-DAY PEAK HOUR VOLUME (11:00-14:00)
FROM 12:45 TO 13:45

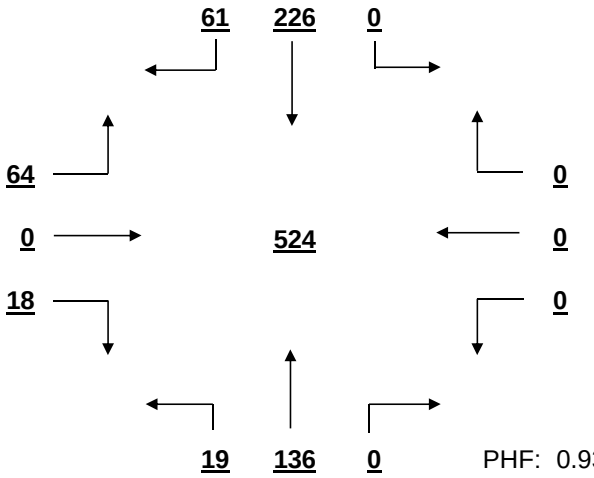

PHF: 0.936

OTHER HOUR VOLUME
FROM 7:00 TO 8:00

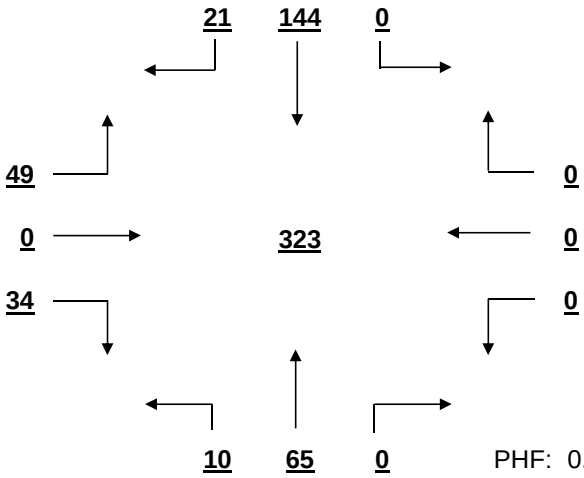

PHF: 0.792

SIGNAL WARRANT ANALYSIS

Jamil Rd AT Tram Rd Date: 11/22/2016

Minor Street Volume, percent of total = 15.8%
Percent of Left Turns from Minor Street = 74.0%
Percent of Right Turns from Minor Street = 26.0%
Percent of Minor Street Right Turns to Remove from Warrant Analysis = 0%
WARRANT BASIS = **100%**

Warrant No. 1 - Vehicular Volume is not met

Condition A - Minimum Vehicular Volume is not met

Average Major Street % of Warrant				Average Minor Street % of Warrant			
421.3	/ 500	=	84%	79.1	/ 150	=	53%

Hourly percent of warrant

	7:00 - 8:00	8:00 - 9:00	9:00 - 10:00	10:00 - 11:00	11:00 - 12:00	12:00 - 13:00	13:00 - 14:00	14:00 - 15:00	15:00 - 16:00	16:00 - 17:00	17:00 - 18:00	18:00 - 19:00
Major St.	48%	53%	37%	41%	56%	81%	87%	93%	93%	119%	139%	164%
Minor St.	55%	55%	45%	49%	50%	55%	57%	61%	51%	49%	54%	51%

Condition B - Interruption to Continuous Traffic is not met

Average Major Street % of Warrant				Average Minor Street % of Warrant			
421.3	/ 750	=	56%	79.1	/ 75	=	105%

Hourly percent of warrant

	7:00 - 8:00	8:00 - 9:00	9:00 - 10:00	10:00 - 11:00	11:00 - 12:00	12:00 - 13:00	13:00 - 14:00	14:00 - 15:00	15:00 - 16:00	16:00 - 17:00	17:00 - 18:00	18:00 - 19:00
Major St.	32%	35%	25%	27%	37%	54%	58%	62%	62%	79%	93%	109%
Minor St.	111%	111%	89%	97%	100%	109%	115%	123%	103%	97%	108%	103%

80% Combination of Conditions A & B is not met

Warrant No. 2 - Four Hour Vehicular Volume is not met

Hourly percent of warrant

	7:00 - 8:00	8:00 - 9:00	9:00 - 10:00	10:00 - 11:00	11:00 - 12:00	12:00 - 13:00	13:00 - 14:00	14:00 - 15:00	15:00 - 16:00	16:00 - 17:00	17:00 - 18:00	18:00 - 19:00
Minor St.	21%	22%	16%	18%	20%	27%	30%	33%	28%	33%	44%	54%

Warrant No. 3 - Peak Hour is not met

Percent of warrant			Percent of warrant	
Overall Peak Hour:	18:00 - 19:00	Higher Volume Side Street Peak Hour:	14:30 - 15:30	
Minor St.	28%	Minor St.	21%	

Warrant No. 4 - Pedestrian Volume. Pedestrian volume shown are minumum volumes assuming heavy major street traffic. If these volumes are met, warrant 4 requires further engineering analysis

Minimum 4 hour ped. volume crossing major street: 107

Minimum peak hour ped. volume crossing major street: 133

Number of pedestrians crossing major street

	7:00 - 8:00	8:00 - 9:00	9:00 - 10:00	10:00 - 11:00	11:00 - 12:00	12:00 - 13:00	13:00 - 14:00	14:00 - 15:00	15:00 - 16:00	16:00 - 17:00	17:00 - 18:00	18:00 - 19:00
Major St.	0	0	0	0	0	0	0	0	0	0	0	0

Warrant No. 7 - Crash Experience (Requires 3 criteria analysis by engineering)

Total Number: 0 From: 1/1/2005 to 1/1/2008
Accident Rate: 0.00 per million entering vehicles

Types of Accidents	No.	/	Avg.		No.	/	Avg.
Right Angle	0	/	0.0	Rear End	0	/	0.0
Lost Control	0	/	0.0	Side Swipe	0	/	0.0
Left Turn	0	/	0.0	Other	0	/	0.0

SOUTH CAROLINA DEPARTMENT OF TRANSPORTATION
DISTRICT 1
TRAFFIC ENGINEERING

County: Richland City: Columbia Date: 11/22/2016

Major Rt: Tram Rd * Not on State System Minor Rt: Sidney Rd * Not on State System

Day of Week: Tuesday Weather: Clear Office: Short Counts JMS

Type of Control: Stop Sign Speed Limit (major st) 35

Direction of Minor Street: E-W Intersection ADT - 2830 (Calc)

Number of Lanes (major st)* 1 Number of Lanes (minor st)* 1

* Each Direction

INTERSECTION VOLUME SUMMARY

	From N Tram Rd				From S Tram Rd				From E Sidney Rd				From W Sidney Rd				Total	Total
	LT	STR	RT	TOT	LT	STR	RT	TOT	LT	STR	RT	TOT	LT	STR	RT	TOT	Vol	Peds
7:00 - 7:15	3	3	0	6	0	7	11	18	2	0	7	9	0	0	0	0	33	0
7:15 - 7:30	5	5	0	10	0	12	12	24	1	0	7	8	0	0	0	0	42	0
7:30 - 7:45	6	3	0	9	0	15	22	37	3	0	7	10	0	0	0	0	56	0
7:45 - 8:00	5	5	0	10	0	14	13	27	3	0	2	5	0	0	0	0	42	0
8:00 - 8:15	5	11	0	16	0	14	15	29	2	0	9	11	0	0	0	0	56	0
8:15 - 8:30	5	3	0	8	0	7	14	21	0	0	5	5	0	0	0	0	34	0
8:30 - 8:45	3	8	0	11	0	6	9	15	1	0	3	4	0	0	0	0	30	0
8:45 - 9:00	5	5	0	10	0	19	8	27	4	0	7	11	0	0	0	0	48	0
9:00 - 9:15	4	7	0	11	0	12	10	22	1	0	4	5	0	0	0	0	38	0
9:15 - 9:30	2	6	0	8	0	11	8	19	6	0	3	9	0	0	0	0	36	0
9:30 - 9:45	4	4	0	8	0	9	8	17	4	0	8	12	0	0	0	0	37	0
9:45 - 10:00	8	5	0	13	0	8	6	14	2	0	7	9	0	0	0	0	36	0
10:00 - 10:15	1	10	0	11	0	15	2	17	4	0	5	9	0	0	0	0	37	0
10:15 - 10:30	3	8	0	11	0	7	6	13	3	0	6	9	0	0	0	0	33	0
10:30 - 10:45	3	9	0	12	0	5	2	7	1	0	8	9	0	0	0	0	28	0
10:45 - 11:00	7	11	0	18	0	13	10	23	4	0	9	13	0	0	0	0	54	0
11:00 - 11:15	11	13	0	24	0	8	7	15	3	0	8	11	0	0	0	0	50	0
11:15 - 11:30	6	7	0	13	0	8	8	16	7	0	7	14	0	0	0	0	43	0
11:30 - 11:45	13	12	0	25	0	11	5	16	2	0	5	7	0	0	0	0	48	0
11:45 - 12:00	8	7	0	15	0	7	2	9	2	0	9	11	0	0	0	0	35	0
12:00 - 12:15	5	18	0	23	0	7	4	11	5	0	6	11	0	0	0	0	45	0
12:15 - 12:30	6	9	0	15	0	18	6	24	4	0	13	17	0	0	0	0	56	0
12:30 - 12:45	8	12	0	20	0	14	6	20	6	0	1	7	0	0	0	0	47	0
12:45 - 13:00	9	6	0	15	0	11	1	12	6	0	8	14	0	0	0	0	41	0
13:00 - 13:15	12	10	0	22	0	11	1	12	3	0	8	11	0	0	0	0	45	0
13:15 - 13:30	7	10	0	17	0	13	3	16	4	0	7	11	0	0	0	0	44	0
13:30 - 13:45	8	15	0	23	0	14	6	20	5	0	9	14	0	0	0	0	57	0
13:45 - 14:00	11	11	0	22	0	11	11	22	2	0	8	10	0	0	0	0	54	0
14:00 - 14:15	6	6	0	12	0	12	6	18	6	0	5	11	0	0	0	0	41	0
14:15 - 14:30	13	15	0	28	0	5	1	6	6	0	6	12	0	0	0	0	46	1
14:30 - 14:45	9	17	0	26	0	12	8	20	5	0	14	19	0	0	0	0	65	0
14:45 - 15:00	7	15	0	22	0	16	6	22	5	0	15	20	0	0	0	0	64	0
15:00 - 15:15	13	11	0	24	0	13	3	16	6	0	5	11	0	0	0	0	51	0
15:15 - 15:30	12	18	0	30	0	9	6	15	5	0	4	9	0	0	0	0	54	0
15:30 - 15:45	9	22	0	31	0	10	3	13	6	0	12	18	0	0	0	0	62	0
15:45 - 16:00	9	12	0	21	0	5	3	8	8	0	14	22	0	0	0	0	51	0
16:00 - 16:15	8	17	0	25	0	11	9	20	13	0	7	20	0	0	0	0	65	0
16:15 - 16:30	16	25	0	41	0	12	5	17	8	0	13	21	0	0	0	0	79	0
16:30 - 16:45	8	31	0	39	0	10	4	14	8	0	12	20	0	0	0	0	73	0
16:45 - 17:00	6	29	0	35	0	9	6	15	8	0	6	14	0	0	0	0	64	0
17:00 - 17:15	10	16	0	26	0	9	5	14	12	0	14	26	0	0	0	0	66	0
17:15 - 17:30	15	18	0	33	0	8	5	13	6	0	10	16	0	0	0	0	62	0
17:30 - 17:45	11	32	0	43	0	12	12	24	13	0	11	24	0	0	0	0	91	0
17:45 - 18:00	4	21	0	25	0	9	8	17	5	0	10	15	0	0	0	0	57	0
18:00 - 18:15	16	15	0	31	0	11	4	15	9	0	6	15	0	0	0	0	61	0
18:15 - 18:30	14	19	0	33	0	8	9	17	5	0	12	17	0	0	0	0	67	0
18:30 - 18:45	14	23	0	37	0	13	4	17	10	0	7	17	0	0	0	0	71	0
18:45 - 19:00	14	9	0	23	0	6	4	10	6	0	12	18	0	0	0	0	51	0
TOTAL	387	604	0	991	0	507	327	834	240	0	381	621	0	0	0	0	2446	1
Trucks	3	5	0	8	0	7	5	12	2	0	5	7	0	0	0	0	27	1.1%
School Buses	2	0	0	2	0	2	1	3	6	0	4	10	0	0	0	0	15	0.6%

TOTAL AND PEAK HOUR VOLUME DIAGRAMS

Tram Rd AT Sidney Rd Date: 11/22/2016

12.0 HOUR TOTAL VOLUME
FROM 7:00 TO 15:00

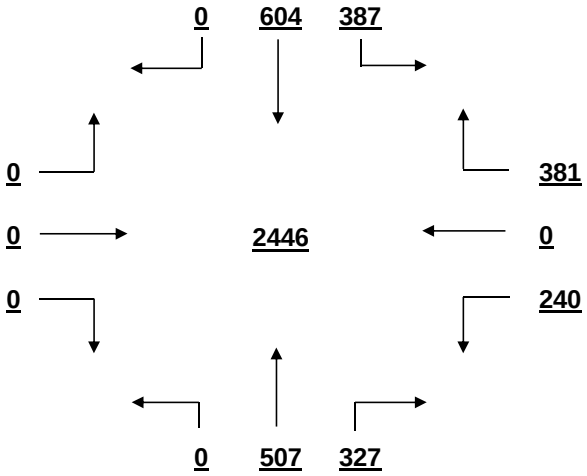

OVERALL PEAK HOUR VOLUME
FROM 16:45 TO 17:45

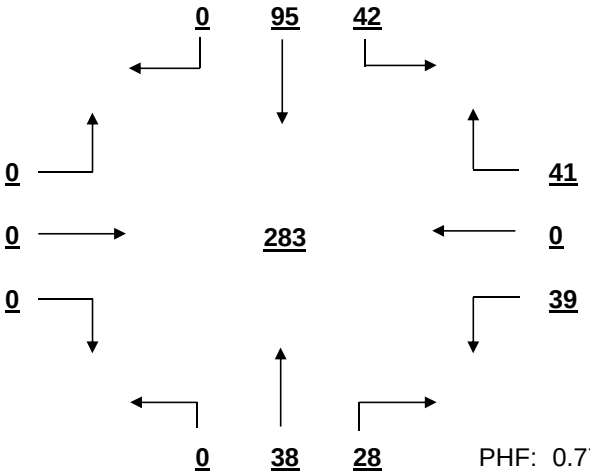

PHF: 0.777

AM PEAK HOUR VOLUME (0:00-10:45)
FROM 7:15 TO 8:15

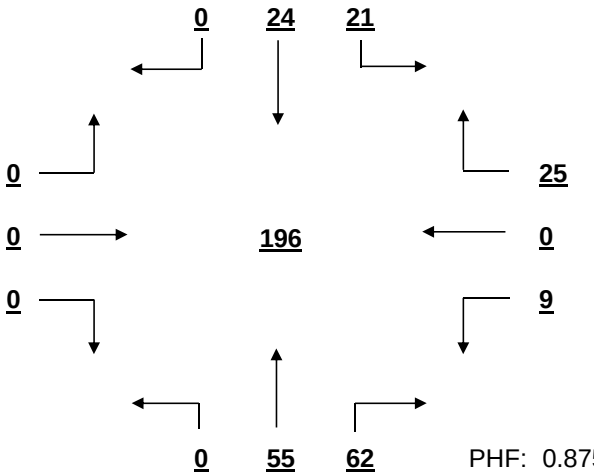

PHF: 0.875

PM PEAK HOUR VOLUME (14:15-23:45)
FROM 16:45 TO 17:45

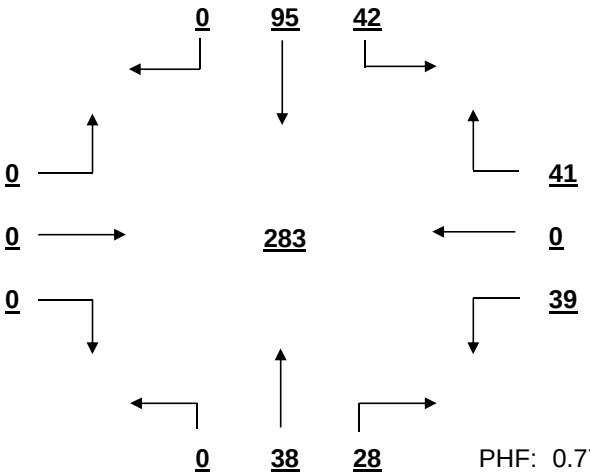

PHF: 0.777

MID-DAY PEAK HOUR VOLUME (11:00-14:00)
FROM 13:00 TO 14:00

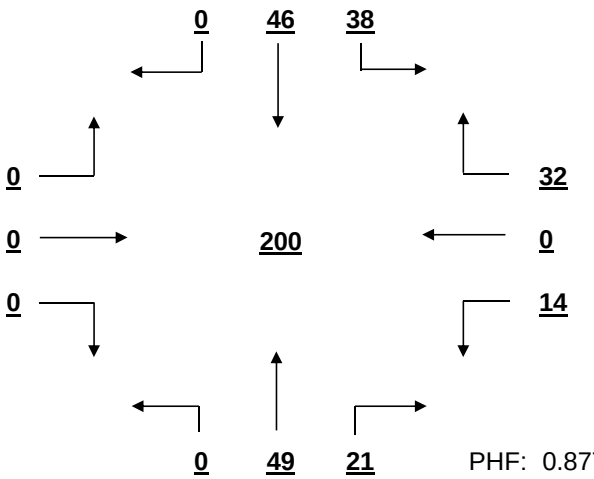

PHF: 0.877

OTHER HOUR VOLUME
FROM 7:00 TO 8:00

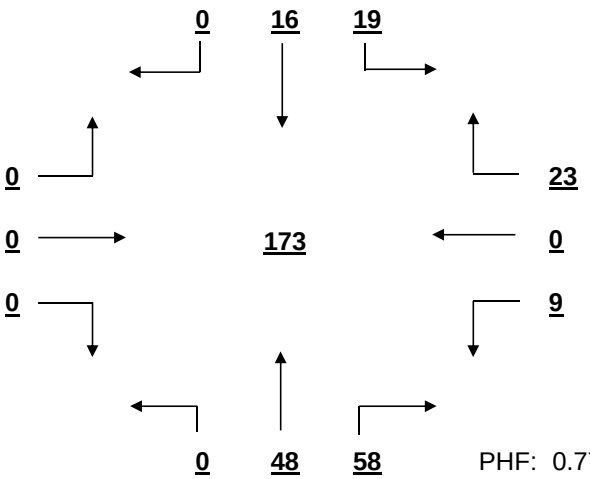

PHF: 0.772

SIGNAL WARRANT ANALYSIS

Tram Rd AT Sidney Rd Date: 11/22/2016

Minor Street Volume, percent of total = 25.4%
Percent of Left Turns from Minor Street = 38.6%
Percent of Right Turns from Minor Street = 61.4%
Percent of Minor Street Right Turns to Remove from Warrant Analysis = 0%
WARRANT BASIS = **100%**

Warrant No. 1 - Vehicular Volume is not met

Condition A - Minimum Vehicular Volume is not met

Average Major Street % of Warrant				Average Minor Street % of Warrant			
152.1	/ 500	=	30%	51.8	/ 150	=	35%

Hourly percent of warrant

	7:00 - 8:00	8:00 - 9:00	9:00 - 10:00	10:00 - 11:00	11:00 - 12:00	12:00 - 13:00	13:00 - 14:00	14:00 - 15:00	15:00 - 16:00	16:00 - 17:00	17:00 - 18:00	18:00 - 19:00
Major St.	28%	27%	22%	22%	27%	28%	31%	31%	32%	41%	39%	37%
Minor St.	21%	21%	23%	27%	29%	33%	31%	41%	40%	50%	54%	45%

Condition B - Interruption to Continuous Traffic is not met

Average Major Street % of Warrant				Average Minor Street % of Warrant			
152.1	/ 750	=	20%	51.8	/ 75	=	69%

Hourly percent of warrant

	7:00 - 8:00	8:00 - 9:00	9:00 - 10:00	10:00 - 11:00	11:00 - 12:00	12:00 - 13:00	13:00 - 14:00	14:00 - 15:00	15:00 - 16:00	16:00 - 17:00	17:00 - 18:00	18:00 - 19:00
Major St.	19%	18%	15%	15%	18%	19%	21%	21%	21%	27%	26%	24%
Minor St.	43%	41%	47%	53%	57%	65%	61%	83%	80%	100%	108%	89%

80% Combination of Conditions A & B is not met

Warrant No. 2 - Four Hour Vehicular Volume is not met

Hourly percent of warrant

	7:00 - 8:00	8:00 - 9:00	9:00 - 10:00	10:00 - 11:00	11:00 - 12:00	12:00 - 13:00	13:00 - 14:00	14:00 - 15:00	15:00 - 16:00	16:00 - 17:00	17:00 - 18:00	18:00 - 19:00
Minor St.	7%	7%	7%	9%	9%	11%	10%	14%	14%	18%	19%	16%

Warrant No. 3 - Peak Hour is not met

Percent of warrant			Percent of warrant		
Overall Peak Hour: 16:45 - 17:45			Higher Volume Side Street Peak Hour: 15:45 - 16:45		
Minor St.	13%		Minor St.	13%	

Warrant No. 4 - Pedestrian Volume. Pedestrian volume shown are minumum volumes assuming heavy major street traffic. If these volumes are met, warrant 4 requires further engineering analysis

Minimum 4 hour ped. volume crossing major street	Minimum peak hour ped. volume crossing major street
107	133

Number of pedestrians crossing major street

	7:00 - 8:00	8:00 - 9:00	9:00 - 10:00	10:00 - 11:00	11:00 - 12:00	12:00 - 13:00	13:00 - 14:00	14:00 - 15:00	15:00 - 16:00	16:00 - 17:00	17:00 - 18:00	18:00 - 19:00
Major St.	0	0	0	0	0	0	0	1	0	0	0	0

Warrant No. 7 - Crash Experience (Requires 3 criteria analysis by engineering)

Total Number: 0 From: 1/1/2005 to 1/1/2008
Accident Rate: 0.00 per million entering vehicles

Types of Accidents	No.	/	Avg.		No.	/	Avg.
Right Angle	0	/	0.0	Rear End	0	/	0.0
Lost Control	0	/	0.0	Side Swipe	0	/	0.0
Left Turn	0	/	0.0	Other	0	/	0.0

SOUTH CAROLINA DEPARTMENT OF TRANSPORTATION
DISTRICT 1
TRAFFIC ENGINEERING

County: Richland City: Columbia Date: 11/22/2016

Major Rt: Fernandina Rd * Not on State System Minor Rt: Beatty Rd * Not on State System

Day of Week: Tuesday Weather: Clear Office: Short Counts JMS

Type of Control: Stop Sign Speed Limit (major st) 35

Direction of Minor Street: E-W Intersection ADT - 9810 (Calc)

Number of Lanes (major st)* 1 Number of Lanes (minor st)* 1

* Each Direction

INTERSECTION VOLUME SUMMARY

	From N Fernandina Rd				From S Fernandina Rd				From E Beatty Rd				From W Beatty Rd				Total	Total
	LT	STR	RT	TOT	LT	STR	RT	TOT	LT	STR	RT	TOT	LT	STR	RT	TOT	Vol	Peds
7:00 - 7:15	6	33	0	39	0	21	1	22	7	0	4	11	0	0	0	0	72	0
7:15 - 7:30	4	58	0	62	0	35	3	38	9	0	7	16	0	0	0	0	116	0
7:30 - 7:45	6	125	0	131	0	43	2	45	11	0	12	23	0	0	0	0	199	0
7:45 - 8:00	5	123	0	128	0	44	2	46	10	0	11	21	0	0	0	0	195	0
8:00 - 8:15	3	98	0	101	0	56	2	58	7	0	7	14	0	0	0	0	173	0
8:15 - 8:30	12	78	0	90	0	68	0	68	5	0	9	14	0	0	0	0	172	0
8:30 - 8:45	6	61	0	67	0	36	6	42	1	0	10	11	0	0	0	0	120	0
8:45 - 9:00	6	45	0	51	0	51	1	52	9	0	9	18	0	0	0	0	121	0
9:00 - 9:15	10	54	0	64	0	32	3	35	5	0	10	15	0	0	0	0	114	0
9:15 - 9:30	6	24	0	30	0	47	5	52	2	0	14	16	0	0	0	0	98	0
9:30 - 9:45	5	34	0	39	0	42	1	43	4	0	7	11	0	0	0	0	93	0
9:45 - 10:00	5	26	0	31	0	33	6	39	5	0	8	13	0	0	0	0	83	0
10:00 - 10:15	4	28	0	32	0	37	6	43	5	0	9	14	0	0	0	0	89	0
10:15 - 10:30	4	37	0	41	0	30	2	32	6	0	16	22	0	0	0	0	95	0
10:30 - 10:45	8	36	0	44	0	34	0	34	2	0	12	14	0	0	0	0	92	0
10:45 - 11:00	6	38	0	44	0	53	1	54	3	0	8	11	0	0	0	0	109	0
11:00 - 11:15	8	39	0	47	0	43	4	47	2	0	6	8	0	0	0	0	102	0
11:15 - 11:30	6	52	0	58	0	46	1	47	5	0	7	12	0	0	0	0	117	0
11:30 - 11:45	9	44	0	53	0	57	2	59	5	0	18	23	0	0	0	0	135	0
11:45 - 12:00	7	44	0	51	0	58	2	60	5	0	14	19	0	0	0	0	130	0
12:00 - 12:15	9	52	0	61	0	66	5	71	5	0	9	14	0	0	0	0	146	0
12:15 - 12:30	9	56	0	65	0	50	7	57	4	0	10	14	0	0	0	0	136	0
12:30 - 12:45	7	49	0	56	0	62	5	67	6	0	19	25	0	0	0	0	148	0
12:45 - 13:00	11	6	0	17	0	60	1	61	5	0	7	12	0	0	0	0	90	0
13:00 - 13:15	4	76	0	80	0	44	8	52	10	0	11	21	0	0	0	0	153	0
13:15 - 13:30	9	45	0	54	0	53	3	56	4	0	13	17	0	0	0	0	127	0
13:30 - 13:45	3	57	0	60	0	37	3	40	4	0	13	17	0	0	0	0	117	0
13:45 - 14:00	9	47	0	56	0	65	4	69	7	0	9	16	0	0	0	0	141	0
14:00 - 14:15	6	46	0	52	0	51	3	54	8	0	13	21	0	0	0	0	127	0
14:15 - 14:30	10	39	0	49	0	38	3	41	5	0	10	15	0	0	0	0	105	0
14:30 - 14:45	10	38	0	48	0	52	1	53	6	0	10	16	0	0	0	0	117	0
14:45 - 15:00	4	59	0	63	0	63	7	70	5	0	17	22	0	0	0	0	155	0
15:00 - 15:15	17	42	0	59	0	50	3	53	6	0	15	21	0	0	0	0	133	0
15:15 - 15:30	7	36	0	43	0	77	6	83	3	0	13	16	0	0	0	0	142	0
15:30 - 15:45	8	48	0	56	0	79	4	83	6	0	15	21	0	0	0	0	160	0
15:45 - 16:00	12	47	0	59	0	83	0	83	10	0	12	22	0	0	0	0	164	0
16:00 - 16:15	9	61	0	70	0	85	6	91	6	0	8	14	0	0	0	0	175	0
16:15 - 16:30	10	58	0	68	0	97	3	100	5	0	14	19	0	0	0	0	187	0
16:30 - 16:45	15	79	0	94	0	119	14	133	6	0	15	21	0	0	0	0	248	0
16:45 - 17:00	10	98	0	108	0	113	9	122	6	0	20	26	0	0	0	0	256	0
17:00 - 17:15	14	93	0	107	0	126	5	131	4	0	16	20	0	0	0	0	258	0
17:15 - 17:30	12	72	0	84	0	106	12	118	3	0	14	17	0	0	0	0	219	0
17:30 - 17:45	11	84	0	95	0	113	4	117	3	0	14	17	0	0	0	0	229	0
17:45 - 18:00	8	71	0	79	0	120	8	128	2	0	13	15	0	0	0	0	222	0
18:00 - 18:15	10	111	0	121	0	100	9	109	5	0	14	19	0	0	0	0	249	0
18:15 - 18:30	8	92	0	100	0	74	4	78	3	0	7	10	0	0	0	0	188	0
18:30 - 18:45	6	134	0	140	0	95	4	99	8	0	10	18	0	0	0	0	257	0
18:45 - 19:00	9	125	0	134	0	65	5	70	11	0	10	21	0	0	0	0	225	0
TOTAL	383	2898	0	3281	0	3009	196	3205	264	0	549	813	0	0	0	0	7299	0
Trucks	7	37	0	44	0	37	3	40	4	0	6	10	0	0	0	0	94	1.3%
School Buses	3	14	0	17	0	15	2	17	0	0	4	4	0	0	0	0	38	0.5%

TOTAL AND PEAK HOUR VOLUME DIAGRAMS

Fernandina Rd AT Beatty Rd

Date: 11/22/2016

12.0 HOUR TOTAL VOLUME
FROM 7:00 TO 15:00

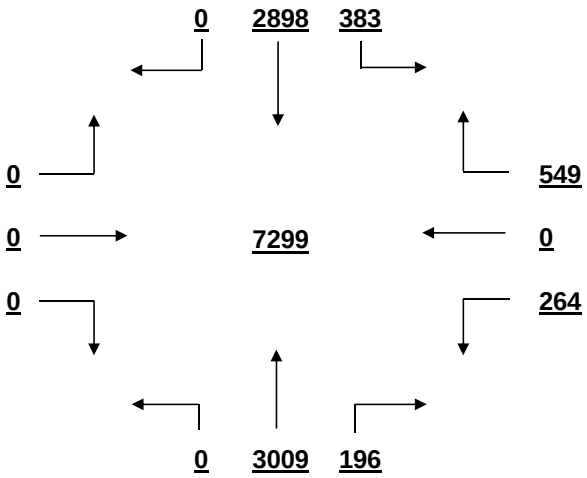

OVERALL PEAK HOUR VOLUME
FROM 16:30 TO 17:30

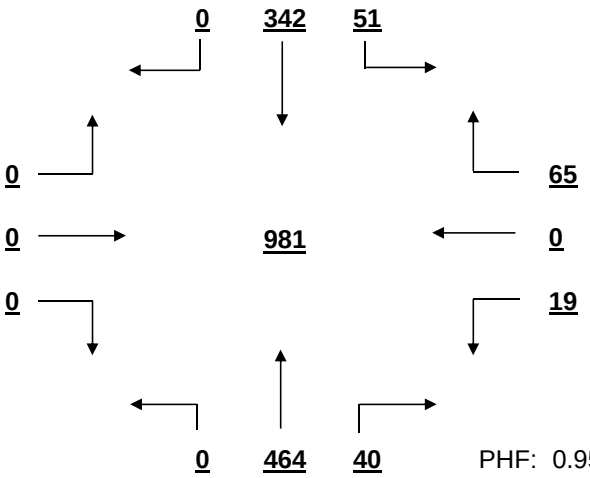

PHF: 0.951

AM PEAK HOUR VOLUME (0:00-10:45)
FROM 7:30 TO 8:30

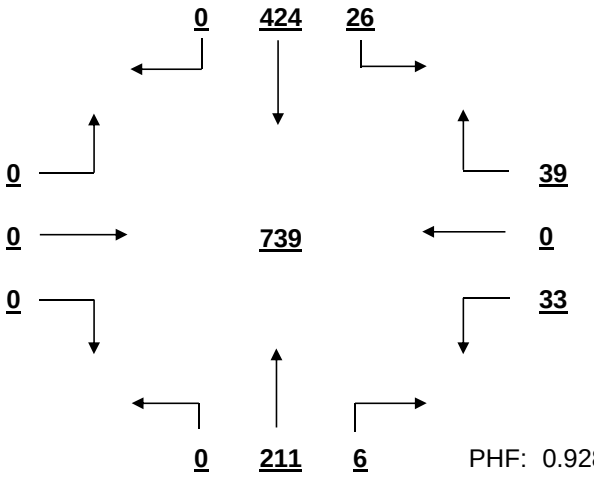

PHF: 0.928

PM PEAK HOUR VOLUME (14:15-23:45)
FROM 16:30 TO 17:30

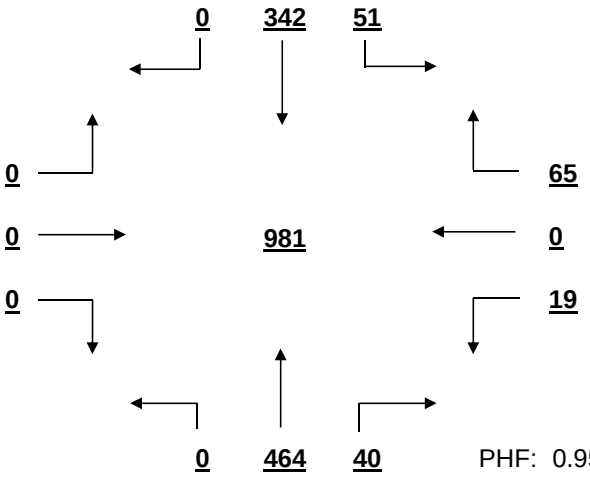

PHF: 0.951

MID-DAY PEAK HOUR VOLUME (11:00-14:00)
FROM 11:45 TO 12:45

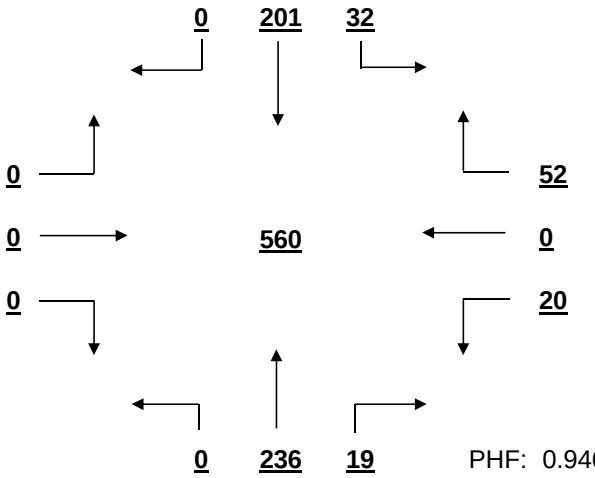

PHF: 0.946

OTHER HOUR VOLUME
FROM 7:00 TO 8:00

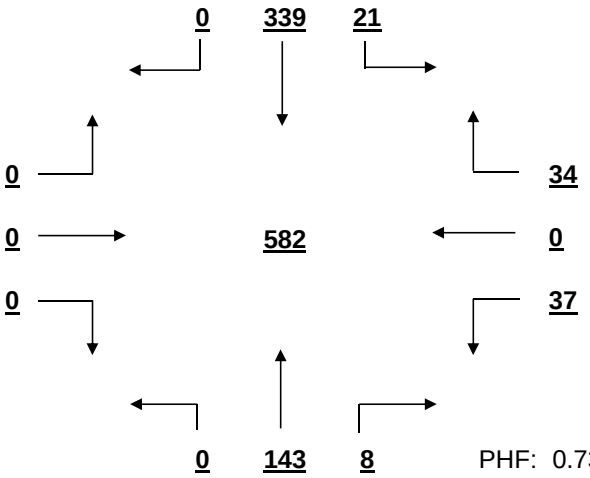

PHF: 0.731

SIGNAL WARRANT ANALYSIS

Fernandina Rd AT Beatty Rd Date: 11/22/2016

Minor Street Volume, percent of total = 11.1%
Percent of Left Turns from Minor Street = 32.5%
Percent of Right Turns from Minor Street = 67.5%
Percent of Minor Street Right Turns to Remove from Warrant Analysis = 0%
WARRANT BASIS = **100%**

Warrant No. 1 - Vehicular Volume is not met

Condition A - Minimum Vehicular Volume is not met

Average Major Street % of Warrant				Average Minor Street % of Warrant			
540.5	/ 500	=	108%	67.8	/ 150	=	45%

Hourly percent of warrant

	7:00 - 8:00	8:00 - 9:00	9:00 - 10:00	10:00 - 11:00	11:00 - 12:00	12:00 - 13:00	13:00 - 14:00	14:00 - 15:00	15:00 - 16:00	16:00 - 17:00	17:00 - 18:00	18:00 - 19:00
Major St.	102%	106%	67%	65%	84%	91%	93%	86%	104%	157%	172%	170%
Minor St.	47%	38%	37%	41%	41%	43%	47%	49%	53%	53%	46%	45%

Condition B - Interruption to Continuous Traffic is not met

Average Major Street % of Warrant				Average Minor Street % of Warrant			
540.5	/ 750	=	72%	67.8	/ 75	=	90%

Hourly percent of warrant

	7:00 - 8:00	8:00 - 9:00	9:00 - 10:00	10:00 - 11:00	11:00 - 12:00	12:00 - 13:00	13:00 - 14:00	14:00 - 15:00	15:00 - 16:00	16:00 - 17:00	17:00 - 18:00	18:00 - 19:00
Major St.	68%	71%	44%	43%	56%	61%	62%	57%	69%	105%	115%	113%
Minor St.	95%	76%	73%	81%	83%	87%	95%	99%	107%	107%	92%	91%

80% Combination of Conditions A & B is not met

Warrant No. 2 - Four Hour Vehicular Volume is not met

Hourly percent of warrant

	7:00 - 8:00	8:00 - 9:00	9:00 - 10:00	10:00 - 11:00	11:00 - 12:00	12:00 - 13:00	13:00 - 14:00	14:00 - 15:00	15:00 - 16:00	16:00 - 17:00	17:00 - 18:00	18:00 - 19:00
Minor St.	28%	23%	16%	18%	21%	23%	26%	25%	32%	52%	52%	51%

Warrant No. 3 - Peak Hour is not met

Percent of warrant			Percent of warrant	
Overall Peak Hour:	16:30 - 17:30	Higher Volume Side Street Peak Hour:	16:15 - 17:15	
Minor St.	35%	Minor St.	34%	

Warrant No. 4 - Pedestrian Volume. Pedestrian volume shown are minumum volumes assuming heavy major street traffic. If these volumes are met, warrant 4 requires further engineering analysis

Minimum 4 hour ped. volume crossing major street	Minimum peak hour ped. volume crossing major street
107	133

Number of pedestrians crossing major street

	7:00 - 8:00	8:00 - 9:00	9:00 - 10:00	10:00 - 11:00	11:00 - 12:00	12:00 - 13:00	13:00 - 14:00	14:00 - 15:00	15:00 - 16:00	16:00 - 17:00	17:00 - 18:00	18:00 - 19:00
Major St.	0	0	0	0	0	0	0	0	0	0	0	0

Warrant No. 7 - Crash Experience (Requires 3 criteria analysis by engineering)

Total Number: 0 From: 1/1/2005 to 1/1/2008
Accident Rate: 0.00 per million entering vehicles

Types of Accidents	No.	/	Avg.		No.	/	Avg.
Right Angle	0	/	0.0	Rear End	0	/	0.0
Lost Control	0	/	0.0	Side Swipe	0	/	0.0
Left Turn	0	/	0.0	Other	0	/	0.0

SOUTH CAROLINA DEPARTMENT OF TRANSPORTATION
DISTRICT 1
TRAFFIC ENGINEERING

County: Richland City: Columbia Date: 11/22/2016

Major Rt: Broad River Rd * Not on State System Minor Rt: Beatty Rd * Not on State System

Day of Week: Tuesday Weather: Clear Office: Short Counts JMS

Type of Control: Signal Speed Limit (major st) 40

Direction of Minor Street: E-W Intersection ADT - 28800 (Calc)

Number of Lanes (major st)* 2 Number of Lanes (minor st)* 1

* Each Direction

INTERSECTION VOLUME SUMMARY

	From N Broad River Rd				From S Broad River Rd				From E Beatty Rd				From W Beatty Rd				Total	Total
	LT	STR	RT	TOT	LT	STR	RT	TOT	LT	STR	RT	TOT	LT	STR	RT	TOT	Vol	Peds
7:00 - 7:15	0	252	10	262	7	173	0	180	0	0	0	0	14	0	3	17	459	1
7:15 - 7:30	0	373	30	403	11	225	0	236	0	0	0	0	20	0	10	30	669	3
7:30 - 7:45	0	385	26	411	8	263	0	271	0	0	0	0	16	0	2	18	700	0
7:45 - 8:00	0	309	30	339	20	302	0	322	0	0	0	0	25	0	14	39	700	0
8:00 - 8:15	0	300	15	315	10	228	0	238	0	0	0	0	13	0	9	22	575	2
8:15 - 8:30	0	227	20	247	12	235	0	247	0	0	0	0	22	0	11	33	527	3
8:30 - 8:45	0	233	17	250	16	182	0	198	0	0	0	0	15	0	10	25	473	0
8:45 - 9:00	0	212	6	218	7	171	0	178	0	0	0	0	15	0	12	27	423	0
9:00 - 9:15	0	157	9	166	3	140	0	143	0	0	0	0	4	0	11	15	324	4
9:15 - 9:30	0	161	9	170	11	147	0	158	0	0	0	0	10	0	20	30	358	0
9:30 - 9:45	0	176	4	180	9	160	0	169	0	0	0	0	11	0	8	19	368	0
9:45 - 10:00	0	177	8	185	9	167	0	176	0	0	0	0	7	0	16	23	384	1
10:00 - 10:15	0	155	7	162	12	145	0	157	0	0	0	0	6	0	13	19	338	0
10:15 - 10:30	0	180	8	188	8	171	0	179	0	0	0	0	8	0	7	15	382	0
10:30 - 10:45	0	167	11	178	10	147	0	157	0	0	0	0	11	0	13	24	359	0
10:45 - 11:00	0	167	9	176	17	155	0	172	0	0	0	0	10	0	9	19	367	1
11:00 - 11:15	0	170	12	182	10	144	0	154	0	0	0	0	13	0	15	28	364	1
11:15 - 11:30	0	210	13	223	14	182	0	196	0	0	0	0	15	0	8	23	442	0
11:30 - 11:45	0	198	10	208	13	178	0	191	0	0	0	0	8	0	13	21	420	5
11:45 - 12:00	0	190	16	206	11	196	0	207	0	0	0	0	13	0	15	28	441	2
12:00 - 12:15	0	231	8	239	11	202	0	213	0	0	0	0	23	0	15	38	490	0
12:15 - 12:30	0	175	6	181	0	227	0	227	0	0	0	0	9	0	13	22	430	0
12:30 - 12:45	0	206	12	218	0	193	0	193	0	0	0	0	13	0	16	29	440	0
12:45 - 13:00	0	191	13	204	23	226	0	249	0	0	0	0	15	0	12	27	480	2
13:00 - 13:15	0	209	4	213	20	225	0	245	0	0	0	0	15	0	16	31	489	1
13:15 - 13:30	0	203	13	216	10	193	0	203	0	0	0	0	14	0	12	26	445	0
13:30 - 13:45	0	183	14	197	0	229	0	229	0	0	0	0	19	0	16	35	461	0
13:45 - 14:00	0	192	8	200	22	233	0	255	0	0	0	0	13	0	13	26	481	4
14:00 - 14:15	0	226	9	235	13	238	0	251	0	0	0	0	13	0	15	28	514	1
14:15 - 14:30	0	217	19	236	20	209	0	229	0	0	0	0	16	0	10	26	491	1
14:30 - 14:45	0	262	26	288	14	261	0	275	0	0	0	0	14	0	13	27	590	1
14:45 - 15:00	0	236	13	249	22	215	0	237	0	0	0	0	19	0	14	33	519	0
15:00 - 15:15	0	239	9	248	14	229	0	243	0	0	0	0	20	0	13	33	524	0
15:15 - 15:30	0	251	10	261	18	227	0	245	0	0	0	0	14	0	11	25	531	0
15:30 - 15:45	0	236	15	251	0	253	0	253	0	0	0	0	5	0	14	19	523	3
15:45 - 16:00	0	198	17	215	0	266	0	266	0	0	0	0	25	0	14	39	520	1
16:00 - 16:15	0	315	24	339	11	276	0	287	0	0	0	0	21	0	20	41	667	1
16:15 - 16:30	0	249	21	270	0	345	0	345	0	0	0	0	20	0	11	31	646	0
16:30 - 16:45	0	302	25	327	18	363	0	381	0	0	0	0	25	0	14	39	747	2
16:45 - 17:00	0	254	29	283	24	351	0	375	0	0	0	0	16	0	13	29	687	0
17:00 - 17:15	0	247	35	282	11	417	0	428	0	0	0	0	28	0	12	40	750	1
17:15 - 17:30	0	216	22	238	13	408	0	421	0	0	0	0	20	0	17	37	696	1
17:30 - 17:45	0	224	19	243	22	378	0	400	0	0	0	0	27	0	21	48	691	1
17:45 - 18:00	0	267	24	291	18	323	0	341	0	0	0	0	15	0	11	26	658	1
18:00 - 18:15	0	314	17	331	22	345	0	367	0	0	0	0	40	0	24	64	762	5
18:15 - 18:30	0	266	18	284	37	355	0	392	0	0	0	0	37	0	17	54	730	0
18:30 - 18:45	0	172	40	212	34	321	0	355	0	0	0	0	34	0	15	49	616	2
18:45 - 19:00	0	157	33	190	31	297	0	328	0	0	0	0	21	0	20	41	559	0
TOTAL	0	10837	773	11610	646	11516	0	12162	0	0	0	0	807	0	631	1438	25210	51
Trucks	0	136	5	141	21	230	0	251	0	0	0	0	8	14	0	22	414	1.6%
School Buses	0	81	11	92	5	2	38	45	0	0	0	0	4	0	8	12	149	0.6%

TOTAL AND PEAK HOUR VOLUME DIAGRAMS

Broad River Rd AT Beatty Rd Date: 11/22/2016

12.0 HOUR TOTAL VOLUME
FROM 7:00 TO 15:00

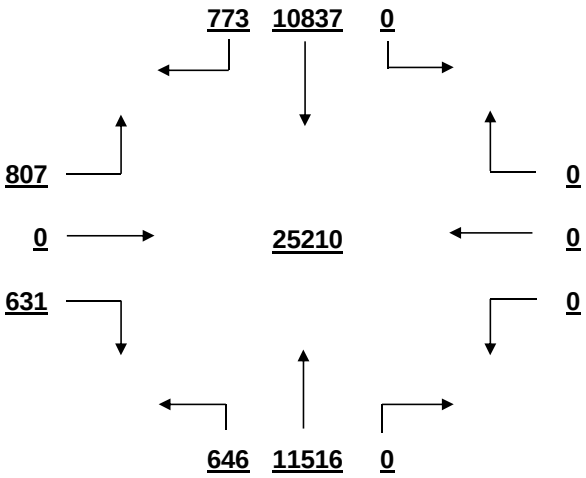

OVERALL PEAK HOUR VOLUME
FROM 16:30 TO 17:30

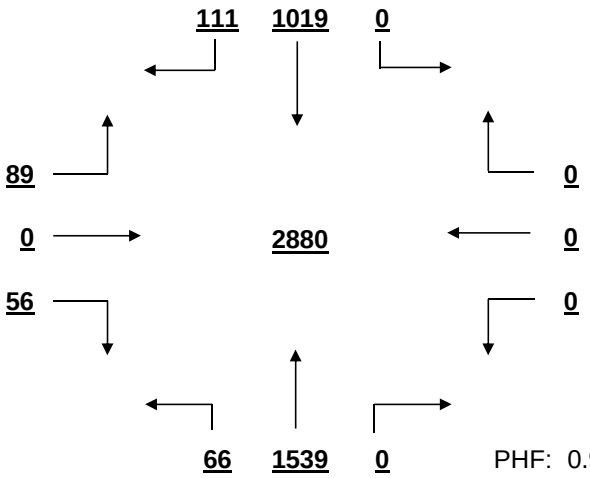

PHF: 0.960

AM PEAK HOUR VOLUME (0:00-10:45)
FROM 7:15 TO 8:15

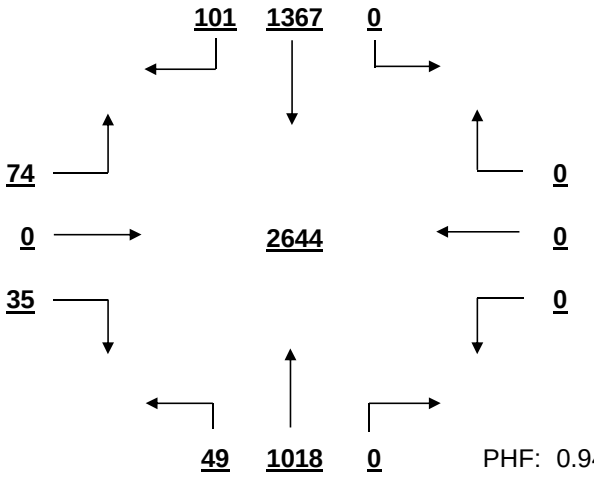

PHF: 0.944

PM PEAK HOUR VOLUME (14:15-23:45)
FROM 16:30 TO 17:30

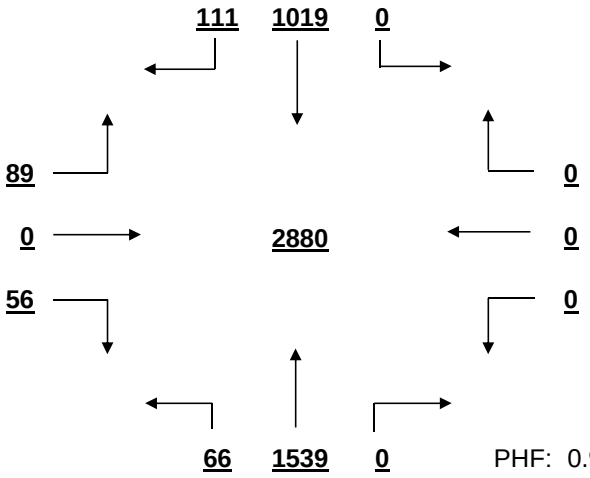

PHF: 0.960

MID-DAY PEAK HOUR VOLUME (11:00-14:00)
FROM 13:00 TO 14:00

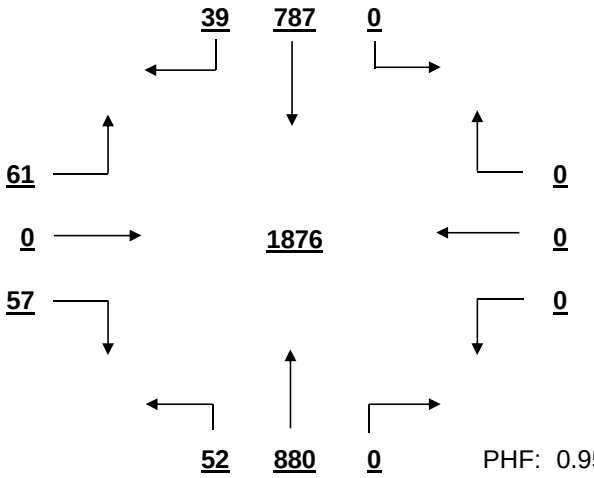

PHF: 0.959

OTHER HOUR VOLUME
FROM 7:00 TO 8:00

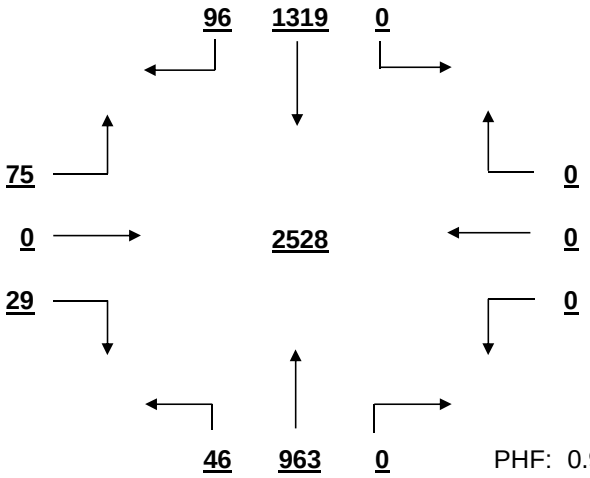

PHF: 0.903

SIGNAL WARRANT ANALYSIS

Broad River Rd AT Beatty Rd Date: 11/22/2016

Minor Street Volume, percent of total = 5.7%
Percent of Left Turns from Minor Street = 56.1%
Percent of Right Turns from Minor Street = 43.9%
Percent of Minor Street Right Turns to Remove from Warrant Analysis = 0%
WARRANT BASIS = **100%**

Warrant No. 1 - Vehicular Volume is met

Condition A - Minimum Vehicular Volume is not met

Average Major Street % of Warrant				Average Minor Street % of Warrant			
1981.0	/ 600	=	330%	119.8	/ 150	=	80%

Hourly percent of warrant

	7:00 - 8:00	8:00 - 9:00	9:00 - 10:00	10:00 - 11:00	11:00 - 12:00	12:00 - 13:00	13:00 - 14:00	14:00 - 15:00	15:00 - 16:00	16:00 - 17:00	17:00 - 18:00	18:00 - 19:00
Major St.	404%	315%	225%	228%	261%	287%	293%	333%	330%	435%	441%	410%
Minor St.	69%	71%	58%	51%	67%	77%	79%	76%	77%	93%	101%	139%

Condition B - Interruption to Continuous Traffic is met

Average Major Street % of Warrant				Average Minor Street % of Warrant			
1981.0	/ 900	=	220%	119.8	/ 75	=	160%

Hourly percent of warrant

	7:00 - 8:00	8:00 - 9:00	9:00 - 10:00	10:00 - 11:00	11:00 - 12:00	12:00 - 13:00	13:00 - 14:00	14:00 - 15:00	15:00 - 16:00	16:00 - 17:00	17:00 - 18:00	18:00 - 19:00
Major St.	269%	210%	150%	152%	174%	192%	195%	222%	220%	290%	294%	273%
Minor St.	139%	143%	116%	103%	133%	155%	157%	152%	155%	187%	201%	277%

80% Combination of Conditions A & B is not met

Warrant No. 2 - Four Hour Vehicular Volume is met

Hourly percent of warrant

	7:00 - 8:00	8:00 - 9:00	9:00 - 10:00	10:00 - 11:00	11:00 - 12:00	12:00 - 13:00	13:00 - 14:00	14:00 - 15:00	15:00 - 16:00	16:00 - 17:00	17:00 - 18:00	18:00 - 19:00
Minor St.	130%	134%	99%	96%	125%	145%	148%	143%	145%	175%	189%	260%

Warrant No. 3 - Peak Hour is met

	Percent of warrant		Percent of warrant
Overall Peak Hour:	16:30 - 17:30	Higher Volume Side Street Peak Hour:	18:00 - 19:00
Minor St.	145%	Minor St.	208%

Warrant No. 4 - Pedestrian Volume. Pedestrian volume shown are minumum volumes assuming heavy major street traffic. If these volumes are met, warrant 4 requires further engineering analysis

Minimum 4 hour ped. volume crossing major street: 107

Minimum peak hour ped. volume crossing major street: 133

Number of pedestrians crossing major street

	7:00 - 8:00	8:00 - 9:00	9:00 - 10:00	10:00 - 11:00	11:00 - 12:00	12:00 - 13:00	13:00 - 14:00	14:00 - 15:00	15:00 - 16:00	16:00 - 17:00	17:00 - 18:00	18:00 - 19:00
Major St.	4	0	3	0	8	1	2	0	1	2	2	6

Warrant No. 7 - Crash Experience (Requires 3 criteria analysis by engineering)

Total Number: 0 From: 1/1/2005 to 1/1/2008
Accident Rate: 0.00 per million entering vehicles

Types of Accidents	No.	/	Avg.		No.	/	Avg.
Right Angle	0	/	0.0	Rear End	0	/	0.0
Lost Control	0	/	0.0	Side Swipe	0	/	0.0
Left Turn	0	/	0.0	Other	0	/	0.0

SOUTH CAROLINA DEPARTMENT OF TRANSPORTATION
DISTRICT 1
TRAFFIC ENGINEERING

County: Richland City: Columbia Date: 11/22/2016

Major Rt: Beatty Rd-Evelyn * Not on State System Minor Rt: Evelyn Rd-Beatty * Not on State System

Day of Week: Tuesday Weather: Clear Office: Short Counts JMS

Type of Control: Stop Sign Speed Limit (major st) 35

Direction of Minor Street: E-W Intersection ADT - 3610 (Calc)

Number of Lanes (major st)* 1 Number of Lanes (minor st)* 1

* Each Direction

INTERSECTION VOLUME SUMMARY

	From N Beatty Rd-Evelyn				From S Beatty Rd-Evelyn				From E Evelyn Rd-Beatty				From W Evelyn Rd-Beatty				Total	Total
	LT	STR	RT	TOT	LT	STR	RT	TOT	LT	STR	RT	TOT	LT	STR	RT	TOT	Vol	Peds
7:00 - 7:15	16	0	2	18	0	0	0	0	0	6	9	15	2	1	0	3	36	0
7:15 - 7:30	14	0	3	17	0	0	0	0	0	6	10	16	2	8	0	10	43	0
7:30 - 7:45	17	0	5	22	0	0	0	0	0	6	18	24	2	3	0	5	51	0
7:45 - 8:00	14	0	1	15	0	0	0	0	0	10	12	22	1	15	0	16	53	0
8:00 - 8:15	12	0	2	14	0	0	0	0	0	11	14	25	1	7	0	8	47	0
8:15 - 8:30	12	0	4	16	0	0	0	0	0	11	10	21	4	10	0	14	51	0
8:30 - 8:45	18	0	2	20	0	0	0	0	0	6	13	19	0	5	0	5	44	0
8:45 - 9:00	18	0	0	18	0	0	0	0	0	7	16	23	3	7	0	10	51	0
9:00 - 9:15	8	0	0	8	0	0	0	0	0	4	13	17	1	6	0	7	32	0
9:15 - 9:30	20	0	0	20	0	0	0	0	0	6	14	20	1	10	0	11	51	1
9:30 - 9:45	10	0	1	11	0	0	0	0	0	6	10	16	0	8	0	8	35	0
9:45 - 10:00	13	0	3	16	0	0	0	0	0	3	13	16	0	5	0	5	37	0
10:00 - 10:15	12	0	0	12	0	0	0	0	0	2	9	11	1	6	0	7	30	0
10:15 - 10:30	15	0	1	16	0	0	0	0	0	4	18	22	0	2	0	2	40	0
10:30 - 10:45	13	0	2	15	0	0	0	0	0	4	14	18	0	10	0	10	43	1
10:45 - 11:00	11	0	3	14	0	0	0	0	0	10	19	29	0	9	0	9	52	0
11:00 - 11:15	16	0	3	19	0	0	0	0	0	9	14	23	3	13	0	16	58	0
11:15 - 11:30	11	0	3	14	0	0	0	0	0	9	11	20	1	2	0	3	37	0
11:30 - 11:45	14	0	1	15	0	0	0	0	0	11	16	27	0	4	0	4	46	0
11:45 - 12:00	14	0	0	14	0	0	0	0	0	8	13	21	2	3	0	5	40	0
12:00 - 12:15	15	0	0	15	0	0	0	0	0	9	15	24	3	5	0	8	47	0
12:15 - 12:30	20	0	3	23	0	0	0	0	0	3	25	28	2	13	0	15	66	1
12:30 - 12:45	17	0	2	19	0	0	0	0	0	13	29	42	3	5	0	8	69	0
12:45 - 13:00	27	0	1	28	0	0	0	0	0	11	14	25	2	8	0	10	63	1
13:00 - 13:15	15	0	3	18	0	0	0	0	0	6	14	20	2	6	0	8	46	0
13:15 - 13:30	9	0	0	9	0	0	0	0	0	8	19	27	0	9	0	9	45	0
13:30 - 13:45	10	0	0	10	0	0	0	0	0	10	13	23	1	6	0	7	40	0
13:45 - 14:00	17	0	1	18	0	0	0	0	0	15	14	29	1	12	0	13	60	0
14:00 - 14:15	13	0	1	14	0	0	0	0	0	13	24	37	2	8	0	10	61	0
14:15 - 14:30	15	0	2	17	0	0	0	0	0	13	19	32	3	11	0	14	63	0
14:30 - 14:45	17	0	0	17	0	0	0	0	0	16	30	46	2	15	0	17	80	0
14:45 - 15:00	26	0	2	28	0	0	0	0	0	11	23	34	4	15	0	19	81	0
15:00 - 15:15	17	0	3	20	0	0	0	0	0	7	19	26	2	9	0	11	57	0
15:15 - 15:30	14	0	1	15	0	0	0	0	0	10	22	32	1	6	0	7	54	0
15:30 - 15:45	19	0	4	23	0	0	0	0	0	12	26	38	3	9	0	12	73	0
15:45 - 16:00	25	0	1	26	0	0	0	0	0	9	21	30	1	3	0	4	60	0
16:00 - 16:15	18	0	2	20	0	0	0	0	0	11	19	30	2	15	0	17	67	0
16:15 - 16:30	18	0	3	21	0	0	0	0	0	8	27	35	1	10	0	11	67	0
16:30 - 16:45	24	0	5	29	0	0	0	0	0	10	30	40	3	15	0	18	87	0
16:45 - 17:00	22	0	6	28	0	0	0	0	0	19	33	52	3	9	0	12	92	0
17:00 - 17:15	19	0	2	21	0	0	0	0	0	16	25	41	4	10	0	14	76	0
17:15 - 17:30	29	0	4	33	0	0	0	0	0	16	26	42	2	15	0	17	92	0
17:30 - 17:45	24	0	1	25	0	0	0	0	0	19	26	45	1	14	0	15	85	0
17:45 - 18:00	23	0	2	25	0	0	0	0	0	14	41	55	4	9	0	13	93	0
18:00 - 18:15	28	0	2	30	0	0	0	0	0	15	20	35	1	17	0	18	83	0
18:15 - 18:30	22	0	1	23	0	0	0	0	0	17	28	45	7	12	0	19	87	0
18:30 - 18:45	24	0	1	25	0	0	0	0	0	27	27	54	2	16	0	18	97	0
18:45 - 19:00	34	0	4	38	0	0	0	0	0	18	26	44	4	8	0	12	94	0
TOTAL	839	0	93	932	0	0	0	0	0	495	921	1416	90	424	0	514	2862	4
Trucks	15	0	1	16	0	0	0	0	0	12	10	22	6	9	0	15	53	1.9%
School Buses	3	0	1	4	0	0	0	0	0	4	5	9	5	8	0	13	26	0.9%

TOTAL AND PEAK HOUR VOLUME DIAGRAMS

Beatty Rd-Evelyn AT Evelyn Rd-Beatty Date: 11/22/2016

12.0 HOUR TOTAL VOLUME
FROM 7:00 TO 15:00

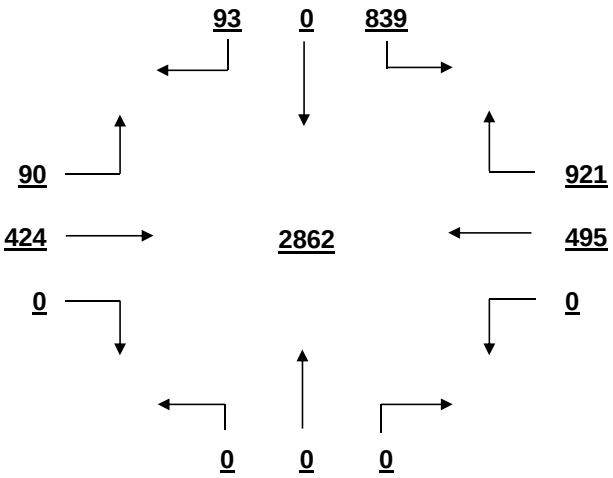

OVERALL PEAK HOUR VOLUME
FROM 18:00 TO 19:00

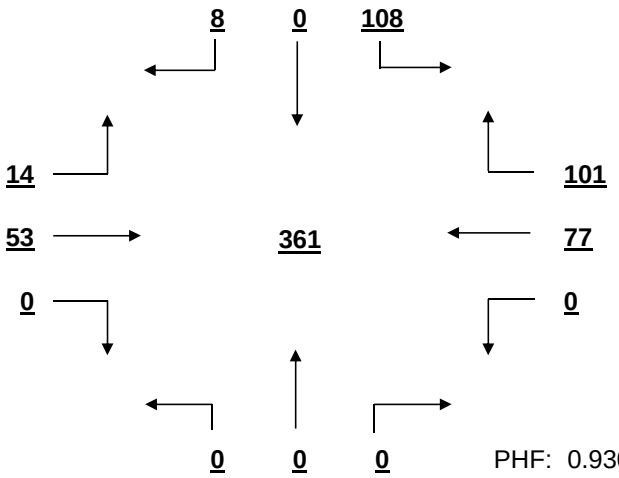

PHF: 0.930

AM PEAK HOUR VOLUME (0:00-10:45)
FROM 7:30 TO 8:30

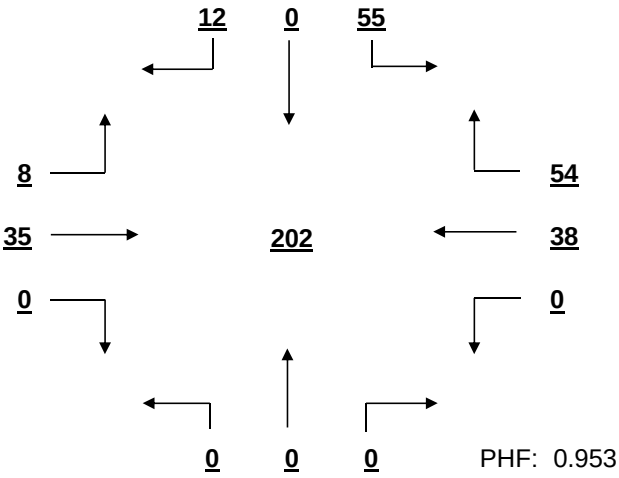

PHF: 0.953

PM PEAK HOUR VOLUME (14:15-23:45)
FROM 18:00 TO 19:00

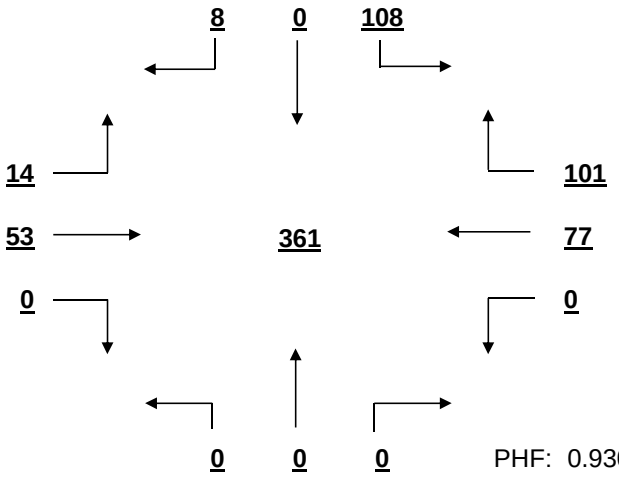

PHF: 0.930

MID-DAY PEAK HOUR VOLUME (11:00-14:00)
FROM 12:00 TO 13:00

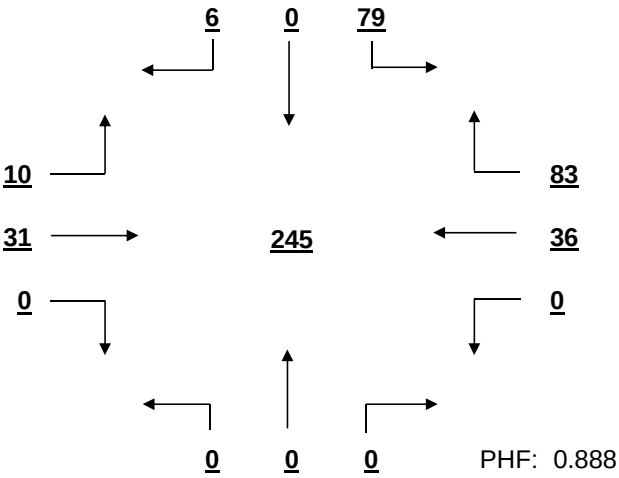

PHF: 0.888

OTHER HOUR VOLUME
FROM 7:00 TO 8:00

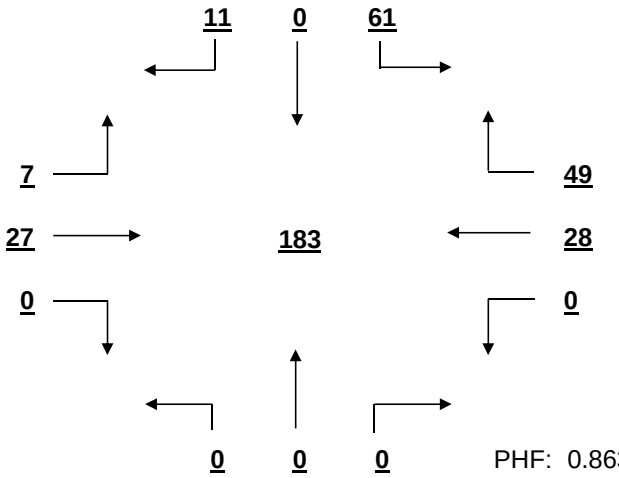

PHF: 0.863

SIGNAL WARRANT ANALYSIS

Beatty Rd-Evelyn AT Evelyn Rd-Beatty Date: 11/22/2016

Minor Street Volume, percent of total = 67.4%
Percent of Left Turns from Minor Street = 4.7%
Percent of Right Turns from Minor Street = 47.7%
Percent of Minor Street Right Turns to Remove from Warrant Analysis = 0%
WARRANT BASIS = **100%**

Warrant No. 1 - Vehicular Volume is not met

Condition A - Minimum Vehicular Volume is not met

Average Major Street % of Warrant				Average Minor Street % of Warrant			
77.7	/ 500	=	16%	118.0	/ 150	=	79%

Hourly percent of warrant

	7:00 - 8:00	8:00 - 9:00	9:00 - 10:00	10:00 - 11:00	11:00 - 12:00	12:00 - 13:00	13:00 - 14:00	14:00 - 15:00	15:00 - 16:00	16:00 - 17:00	17:00 - 18:00	18:00 - 19:00
Major St.	14%	14%	11%	11%	12%	17%	11%	15%	17%	20%	21%	23%
Minor St.	51%	59%	46%	53%	61%	79%	66%	99%	84%	105%	122%	119%

Condition B - Interruption to Continuous Traffic is not met

Average Major Street % of Warrant				Average Minor Street % of Warrant			
77.7	/ 750	=	10%	118.0	/ 75	=	157%

Hourly percent of warrant

	7:00 - 8:00	8:00 - 9:00	9:00 - 10:00	10:00 - 11:00	11:00 - 12:00	12:00 - 13:00	13:00 - 14:00	14:00 - 15:00	15:00 - 16:00	16:00 - 17:00	17:00 - 18:00	18:00 - 19:00
Major St.	10%	9%	7%	8%	8%	11%	7%	10%	11%	13%	14%	15%
Minor St.	103%	117%	92%	107%	121%	159%	132%	199%	168%	209%	244%	237%

80% Combination of Conditions A & B is not met

Warrant No. 2 - Four Hour Vehicular Volume is not met

Hourly percent of warrant

	7:00 - 8:00	8:00 - 9:00	9:00 - 10:00	10:00 - 11:00	11:00 - 12:00	12:00 - 13:00	13:00 - 14:00	14:00 - 15:00	15:00 - 16:00	16:00 - 17:00	17:00 - 18:00	18:00 - 19:00
Minor St.	16%	18%	14%	16%	18%	24%	20%	30%	26%	33%	39%	38%

Warrant No. 3 - Peak Hour is not met

	Percent of warrant		Percent of warrant
Overall Peak Hour:	18:00 - 19:00	Higher Volume Side Street Peak Hour:	17:45 - 18:45
Minor St.	26%	Minor St.	28%

Warrant No. 4 - Pedestrian Volume. Pedestrian volume shown are minumum volumes assuming heavy major street traffic. If these volumes are met, warrant 4 requires further engineering analysis

Minimum 4 hour ped. volume crossing major street: 107

Minimum peak hour ped. volume crossing major street: 133

Number of pedestrians crossing major street

	7:00 - 8:00	8:00 - 9:00	9:00 - 10:00	10:00 - 11:00	11:00 - 12:00	12:00 - 13:00	13:00 - 14:00	14:00 - 15:00	15:00 - 16:00	16:00 - 17:00	17:00 - 18:00	18:00 - 19:00
Major St.	0	0	1	0	0	2	0	0	0	0	0	0

Warrant No. 7 - Crash Experience (Requires 3 criteria analysis by engineering)

Total Number: 0 From: 1/1/2005 to 1/1/2008

Accident Rate: 0.00 per million entering vehicles

Types of Accidents	No.	/	Avg.		No.	/	Avg.
Right Angle	0	/	0.0	Rear End	0	/	0.0
Lost Control	0	/	0.0	Side Swipe	0	/	0.0
Left Turn	0	/	0.0	Other	0	/	0.0

SOUTH CAROLINA DEPARTMENT OF TRANSPORTATION
DISTRICT 1
TRAFFIC ENGINEERING

County: Richland City: Columbia Date: 11/21/2016

Major Rt: Fernandina Rd * Not on State System Minor Rt: Evelyn Dr * Not on State System

Day of Week: Monday Weather: Clear Office: Short Counts JMS

Type of Control: Stop Sign Speed Limit (major st) 35

Direction of Minor Street: E-W Intersection ADT - 9670 (Calc)

Number of Lanes (major st)* 1 Number of Lanes (minor st)* 1

* Each Direction

INTERSECTION VOLUME SUMMARY

	From N Fernandina Rd				From S Fernandina Rd				From E Evelyn Dr				From W Evelyn Dr				Total	Total
	LT	STR	RT	TOT	LT	STR	RT	TOT	LT	STR	RT	TOT	LT	STR	RT	TOT	Vol	Peds
7:00 - 7:15	1	27	0	28	0	24	5	29	20	0	4	24	0	0	0	0	81	1
7:15 - 7:30	0	48	0	48	0	43	10	53	13	0	3	16	0	0	0	0	117	0
7:30 - 7:45	4	101	0	105	0	70	12	82	28	0	4	32	0	0	0	0	219	0
7:45 - 8:00	4	133	0	137	0	79	9	88	16	0	10	26	0	0	0	0	251	0
8:00 - 8:15	5	123	0	128	0	75	11	86	21	0	3	24	0	0	0	0	238	0
8:15 - 8:30	4	99	0	103	0	83	9	92	7	0	2	9	0	0	0	0	204	0
8:30 - 8:45	0	94	0	94	0	57	12	69	16	0	6	22	0	0	0	0	185	0
8:45 - 9:00	3	58	0	61	0	69	10	79	12	0	7	19	0	0	0	0	159	0
9:00 - 9:15	0	37	0	37	0	54	7	61	9	0	2	11	0	0	0	0	109	0
9:15 - 9:30	4	21	0	25	0	41	3	44	5	0	6	11	0	0	0	0	80	0
9:30 - 9:45	3	27	0	30	0	45	6	51	5	0	5	10	0	0	0	0	91	0
9:45 - 10:00	0	0	0	0	0	0	0	0	0	0	0	0	0	0	0	0	0	0
10:00 - 10:15	1	36	0	37	0	43	7	50	5	0	5	10	0	0	0	0	97	0
10:15 - 10:30	5	22	0	27	0	35	8	43	8	0	7	15	0	0	0	0	85	0
10:30 - 10:45	3	34	0	37	0	41	4	45	6	0	4	10	0	0	0	0	92	0
10:45 - 11:00	3	38	0	41	0	29	3	32	11	0	5	16	0	0	0	0	89	0
11:00 - 11:15	2	34	0	36	0	39	9	48	4	0	9	13	0	0	0	0	97	0
11:15 - 11:30	5	49	0	54	0	54	8	62	9	0	1	10	0	0	0	0	126	0
11:30 - 11:45	3	49	0	52	0	53	8	61	6	0	3	9	0	0	0	0	122	0
11:45 - 12:00	7	36	0	43	0	47	9	56	14	0	5	19	0	0	0	0	118	0
12:00 - 12:15	3	64	0	67	0	49	4	53	11	0	12	23	0	0	0	0	143	0
12:15 - 12:30	6	59	0	65	0	65	12	77	8	0	3	11	0	0	0	0	153	0
12:30 - 12:45	3	50	0	53	0	75	7	82	11	0	6	17	0	0	0	0	152	0
12:45 - 13:00	6	54	0	60	0	52	10	62	12	0	2	14	0	0	0	0	136	0
13:00 - 13:15	5	37	0	42	0	67	11	78	3	0	3	6	0	0	0	0	126	0
13:15 - 13:30	5	61	0	66	0	46	7	53	5	0	3	8	0	0	0	0	127	0
13:30 - 13:45	0	0	0	0	0	0	0	0	0	0	0	0	0	0	0	0	0	0
13:45 - 14:00	2	57	0	59	0	60	9	69	9	0	10	19	0	0	0	0	147	1
14:00 - 14:15	6	50	0	56	0	52	7	59	8	0	2	10	0	0	0	0	125	0
14:15 - 14:30	2	46	0	48	0	46	8	54	5	0	6	11	0	0	0	0	113	0
14:30 - 14:45	4	46	0	50	0	52	7	59	13	0	11	24	0	0	0	0	133	0
14:45 - 15:00	5	31	0	36	0	53	28	81	11	0	9	20	0	0	0	0	137	0
15:00 - 15:15	14	11	0	25	0	29	101	130	16	0	2	18	0	0	0	0	173	0
15:15 - 15:30	15	4	0	19	0	11	139	150	21	0	3	24	0	0	0	0	193	0
15:30 - 15:45	6	29	0	35	0	66	91	157	31	0	6	37	0	0	0	0	229	1
15:45 - 16:00	3	61	0	64	0	147	6	153	15	0	5	20	0	0	0	0	237	0
16:00 - 16:15	12	55	0	67	0	156	11	167	13	0	9	22	0	0	0	0	256	0
16:15 - 16:30	1	62	0	63	0	127	15	142	13	0	6	19	0	0	0	0	224	0
16:30 - 16:45	5	90	0	95	0	93	15	108	12	0	10	22	0	0	0	0	225	0
16:45 - 17:00	4	83	0	87	0	98	11	109	8	0	10	18	0	0	0	0	214	0
17:00 - 17:15	9	125	0	134	0	118	12	130	19	0	8	27	0	0	0	0	291	0
17:15 - 17:30	6	83	0	89	0	112	19	131	9	0	8	17	0	0	0	0	237	0
17:30 - 17:45	7	61	0	68	0	119	19	138	5	0	4	9	0	0	0	0	215	0
17:45 - 18:00	6	55	0	61	0	114	14	128	11	0	7	18	0	0	0	0	207	0
18:00 - 18:15	10	47	0	57	0	98	25	123	10	0	5	15	0	0	0	0	195	0
18:15 - 18:30	9	28	0	37	0	71	15	86	14	0	11	25	0	0	0	0	148	0
18:30 - 18:45	8	42	0	50	0	42	12	54	16	0	6	22	0	0	0	0	126	0
18:45 - 19:00	5	25	0	30	0	18	12	30	8	0	4	12	0	0	0	0	72	0
TOTAL	224	2482	0	2706	0	3017	777	3794	532	0	262	794	0	0	0	0	7294	3
Trucks	0	16	0	16	0	19	11	30	2	0	0	2	0	0	0	0	48	0.7%
School Buses	1	6	0	7	0	12	13	25	7	0	1	8	0	0	0	0	40	0.5%

TOTAL AND PEAK HOUR VOLUME DIAGRAMS

Fernandina Rd AT Evelyn Dr Date: 11/21/2016

12.0 HOUR TOTAL VOLUME
FROM 7:00 TO 15:00

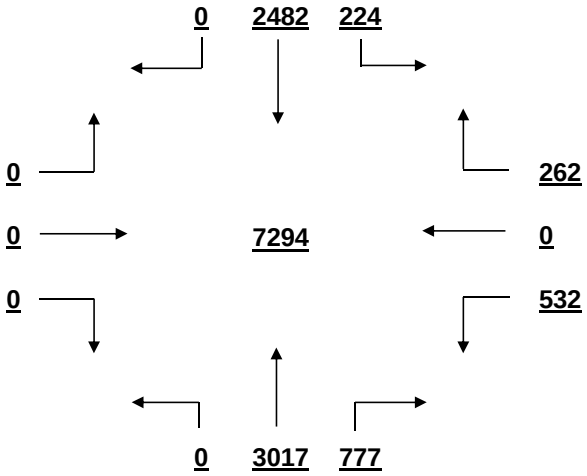

OVERALL PEAK HOUR VOLUME
FROM 16:30 TO 17:30

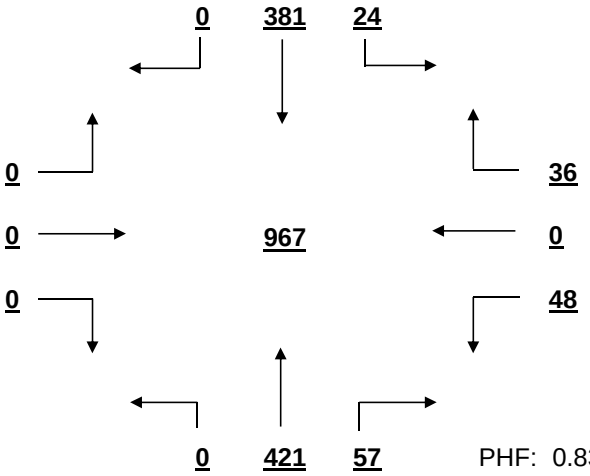

PHF: 0.831

AM PEAK HOUR VOLUME (0:00-10:45)
FROM 7:30 TO 8:30

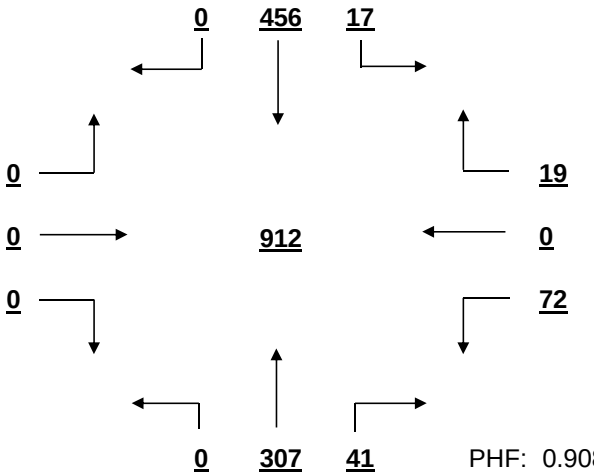

PHF: 0.908

PM PEAK HOUR VOLUME (14:15-23:45)
FROM 16:30 TO 17:30

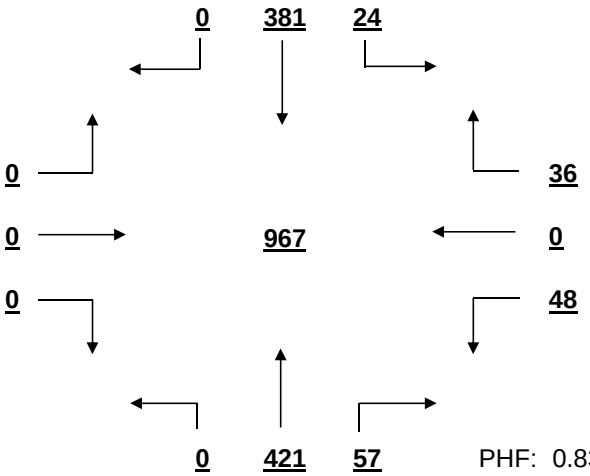

PHF: 0.831

MID-DAY PEAK HOUR VOLUME (11:00-14:00)
FROM 12:00 TO 13:00

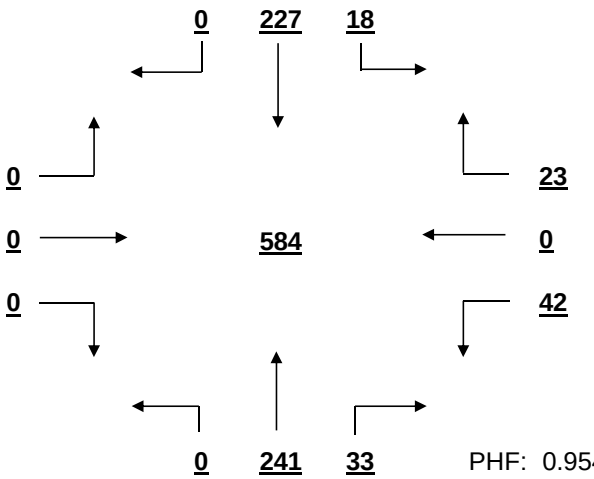

PHF: 0.954

OTHER HOUR VOLUME
FROM 7:00 TO 8:00

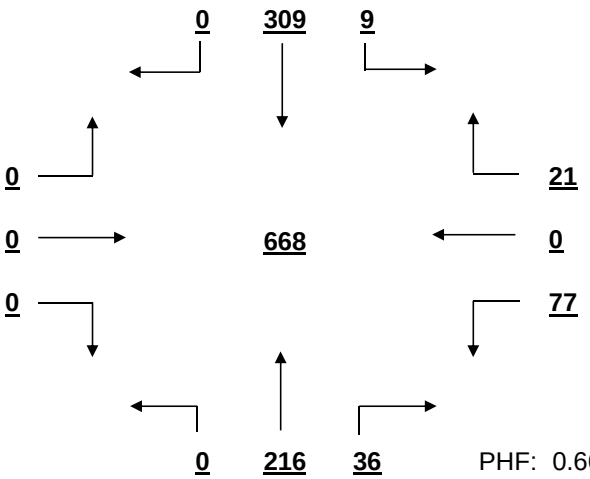

PHF: 0.665

SIGNAL WARRANT ANALYSIS

Fernandina Rd AT Evelyn Dr Date: 11/21/2016

Minor Street Volume, percent of total = 10.9%
Percent of Left Turns from Minor Street = 67.0%
Percent of Right Turns from Minor Street = 33.0%
Percent of Minor Street Right Turns to Remove from Warrant Analysis = 0%
WARRANT BASIS = **100%**

Warrant No. 1 - Vehicular Volume is not met

Condition A - Minimum Vehicular Volume is not met

Average Major Street % of Warrant				Average Minor Street % of Warrant			
541.7	/ 500	=	108%	66.2	/ 150	=	44%

Hourly percent of warrant

	7:00 - 8:00	8:00 - 9:00	9:00 - 10:00	10:00 - 11:00	11:00 - 12:00	12:00 - 13:00	13:00 - 14:00	14:00 - 15:00	15:00 - 16:00	16:00 - 17:00	17:00 - 18:00	18:00 - 19:00
Major St.	114%	142%	50%	62%	82%	104%	73%	89%	147%	168%	176%	93%
Minor St.	65%	49%	21%	34%	34%	43%	22%	43%	66%	54%	47%	49%

Condition B - Interruption to Continuous Traffic is not met

Average Major Street % of Warrant				Average Minor Street % of Warrant			
541.7	/ 750	=	72%	66.2	/ 75	=	88%

Hourly percent of warrant

	7:00 - 8:00	8:00 - 9:00	9:00 - 10:00	10:00 - 11:00	11:00 - 12:00	12:00 - 13:00	13:00 - 14:00	14:00 - 15:00	15:00 - 16:00	16:00 - 17:00	17:00 - 18:00	18:00 - 19:00
Major St.	76%	95%	33%	42%	55%	69%	49%	59%	98%	112%	117%	62%
Minor St.	131%	99%	43%	68%	68%	87%	44%	87%	132%	108%	95%	99%

80% Combination of Conditions A & B is not met

Warrant No. 2 - Four Hour Vehicular Volume is not met

Hourly percent of warrant

	7:00 - 8:00	8:00 - 9:00	9:00 - 10:00	10:00 - 11:00	11:00 - 12:00	12:00 - 13:00	13:00 - 14:00	14:00 - 15:00	15:00 - 16:00	16:00 - 17:00	17:00 - 18:00	18:00 - 19:00
Minor St.	42%	42%	8%	14%	17%	26%	10%	23%	58%	59%	56%	27%

Warrant No. 3 - Peak Hour is not met

Percent of warrant			Percent of warrant	
Overall Peak Hour: 16:30 - 17:30		Higher Volume Side Street Peak Hour: 15:15 - 16:15		
Minor St.	34%		Minor St.	38%

Warrant No. 4 - Pedestrian Volume. Pedestrian volume shown are minumum volumes assuming heavy major street traffic. If these volumes are met, warrant 4 requires further engineering analysis

Minimum 4 hour ped. volume crossing major street	Minimum peak hour ped. volume crossing major street
107	133

Number of pedestrians crossing major street

	7:00 - 8:00	8:00 - 9:00	9:00 - 10:00	10:00 - 11:00	11:00 - 12:00	12:00 - 13:00	13:00 - 14:00	14:00 - 15:00	15:00 - 16:00	16:00 - 17:00	17:00 - 18:00	18:00 - 19:00
Major St.	1	0	0	0	0	0	1	0	1	0	0	0

Warrant No. 7 - Crash Experience (Requires 3 criteria analysis by engineering)

Total Number: 0 From: 1/1/2005 to 1/1/2008
Accident Rate: 0.00 per million entering vehicles

Types of Accidents	No.	/	Avg.		No.	/	Avg.
Right Angle	0	/	0.0	Rear End	0	/	0.0
Lost Control	0	/	0.0	Side Swipe	0	/	0.0
Left Turn	0	/	0.0	Other	0	/	0.0

SOUTH CAROLINA DEPARTMENT OF TRANSPORTATION
DISTRICT 1
TRAFFIC ENGINEERING

County: Richland City: Columbia Date: 11/28/2016

Major Rt: St. Andrews Rd * Not on State System Minor Rt: Sidney Rd * Not on State System

Day of Week: Monday Weather: Clear Office: Short Counts JMS

Type of Control: Signal Speed Limit (major st) 40

Direction of Minor Street: N-S Intersection ADT - 17170 (Calc)

Number of Lanes (major st)* 2 Number of Lanes (minor st)* 1 * Each Direction

INTERSECTION VOLUME SUMMARY

	From N Sidney Rd				From S Sidney Rd				From E St. Andrews Rd				From W St. Andrews Rd				Total	Total
	LT	STR	RT	TOT	LT	STR	RT	TOT	LT	STR	RT	TOT	LT	STR	RT	TOT	Vol	Peds
7:00 - 7:15	32	0	4	36	0	0	0	0	0	57	7	64	2	167	0	169	269	0
7:15 - 7:30	40	0	2	42	0	0	0	0	0	85	15	100	3	210	0	213	355	0
7:30 - 7:45	44	0	7	51	0	0	0	0	0	100	19	119	0	263	0	263	433	0
7:45 - 8:00	30	0	3	33	0	0	0	0	0	112	11	123	6	260	0	266	422	0
8:00 - 8:15	24	0	2	26	0	0	0	0	0	89	9	98	2	241	0	243	367	0
8:15 - 8:30	24	0	0	24	0	0	0	0	0	80	11	91	0	197	0	197	312	0
8:30 - 8:45	24	0	0	24	0	0	0	0	0	81	7	88	1	183	0	184	296	0
8:45 - 9:00	21	0	3	24	0	0	0	0	0	100	13	113	2	146	0	148	285	0
9:00 - 9:15	16	0	3	19	0	0	0	0	0	88	10	98	4	147	0	151	268	0
9:15 - 9:30	17	0	2	19	0	0	0	0	0	80	6	86	1	166	0	167	272	0
9:30 - 9:45	8	0	6	14	0	0	0	0	0	90	14	104	1	96	0	97	215	0
9:45 - 10:00	12	0	6	18	0	0	0	0	0	97	11	108	1	101	0	102	228	0
10:00 - 10:15	10	0	0	10	0	0	0	0	0	94	10	104	3	113	0	116	230	0
10:15 - 10:30	13	0	6	19	0	0	0	0	0	90	10	100	4	116	0	120	239	0
10:30 - 10:45	12	0	3	15	0	0	0	0	0	92	15	107	3	112	0	115	237	0
10:45 - 11:00	17	0	4	21	0	0	0	0	0	98	6	104	1	108	0	109	234	0
11:00 - 11:15	13	0	4	17	0	0	0	0	0	101	13	114	1	106	0	107	238	0
11:15 - 11:30	18	0	6	24	0	0	0	0	0	96	16	112	1	105	0	106	242	0
11:30 - 11:45	15	0	2	17	0	0	0	0	0	118	11	129	8	110	0	118	264	0
11:45 - 12:00	13	0	4	17	0	0	0	0	0	116	13	129	4	125	0	129	275	0
12:00 - 12:15	11	0	7	18	0	0	0	0	0	120	11	131	3	130	0	133	282	0
12:15 - 12:30	14	0	2	16	0	0	0	0	0	132	15	147	4	138	0	142	305	0
12:30 - 12:45	20	0	2	22	0	0	0	0	0	128	20	148	2	151	0	153	323	0
12:45 - 13:00	15	0	4	19	0	0	0	0	0	115	14	129	4	141	0	145	293	0
13:00 - 13:15	13	0	4	17	0	0	0	0	0	119	15	134	5	134	0	139	290	3
13:15 - 13:30	19	0	5	24	0	0	0	0	0	123	14	137	4	145	0	149	310	0
13:30 - 13:45	15	0	6	21	0	0	0	0	0	122	15	137	4	135	0	139	297	0
13:45 - 14:00	21	0	5	26	0	0	0	0	0	118	12	130	1	129	0	130	286	0
14:00 - 14:15	12	0	6	18	0	0	0	0	0	109	13	122	1	132	0	133	273	0
14:15 - 14:30	20	0	2	22	0	0	0	0	0	138	12	150	2	115	0	117	289	0
14:30 - 14:45	12	0	4	16	0	0	0	0	0	125	13	138	5	129	0	134	288	0
14:45 - 15:00	17	0	6	23	0	0	0	0	0	121	17	138	4	130	0	134	295	0
15:00 - 15:15	21	0	6	27	0	0	0	0	0	158	9	167	3	167	0	170	364	1
15:15 - 15:30	16	0	3	19	0	0	0	0	0	138	20	158	3	115	0	118	295	0
15:30 - 15:45	16	0	5	21	0	0	0	0	0	143	13	156	6	141	0	147	324	0
15:45 - 16:00	11	0	4	15	0	0	0	0	0	153	18	171	6	145	0	151	337	0
16:00 - 16:15	17	0	5	22	0	0	0	0	0	154	26	180	6	148	0	154	356	0
16:15 - 16:30	21	0	7	28	0	0	0	0	0	171	15	186	1	137	0	138	352	1
16:30 - 16:45	14	0	6	20	0	0	0	0	0	176	26	202	6	120	0	126	348	0
16:45 - 17:00	24	0	2	26	0	0	0	0	0	205	23	228	3	134	0	137	391	0
17:00 - 17:15	20	0	3	23	0	0	0	0	0	229	3	232	5	170	0	175	430	0
17:15 - 17:30	20	0	6	26	0	0	0	0	0	254	20	274	4	162	0	166	466	0
17:30 - 17:45	20	0	5	25	0	0	0	0	0	236	18	254	3	118	0	121	400	0
17:45 - 18:00	19	0	3	22	0	0	0	0	0	217	34	251	4	144	0	148	421	0
18:00 - 18:15	14	0	4	18	0	0	0	0	0	152	31	183	5	135	0	140	341	1
18:15 - 18:30	14	0	3	17	0	0	0	0	0	174	25	199	5	93	0	98	314	0
18:30 - 18:45	9	0	5	14	0	0	0	0	0	135	20	155	4	91	0	95	264	0
18:45 - 19:00	13	0	4	17	0	0	0	0	0	109	13	122	2	80	0	82	221	0
TOTAL	861	0	191	1052	0	0	0	0	0	6138	712	6850	153	6781	0	6934	14836	6
Trucks	4	0	1	5	0	0	0	0	0	103	2	105	0	109	0	109	219	1.5%
School Buses	3	0	3	6	0	0	0	0	0	28	7	35	2	26	0	28	69	0.5%

TOTAL AND PEAK HOUR VOLUME DIAGRAMS

St. Andrews Rd AT Sidney Rd Date: 11/28/2016

12.0 HOUR TOTAL VOLUME
FROM 7:00 TO 15:00

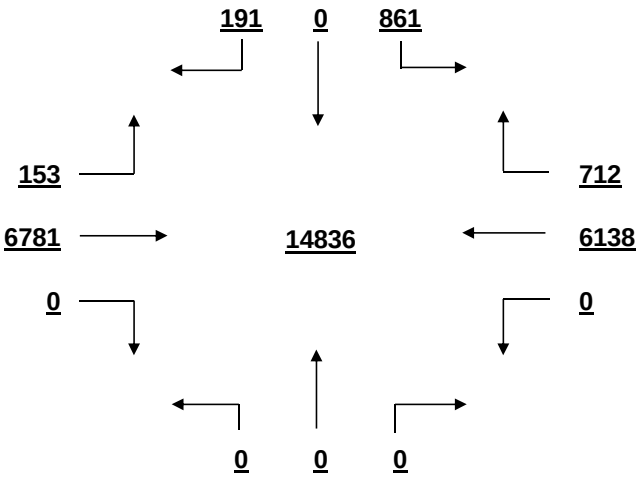

OVERALL PEAK HOUR VOLUME
FROM 17:00 TO 18:00

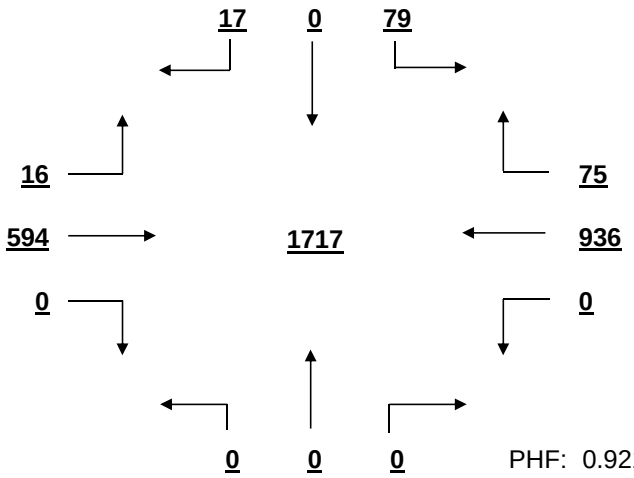

PHF: 0.921

AM PEAK HOUR VOLUME (0:00-10:45)
FROM 7:15 TO 8:15

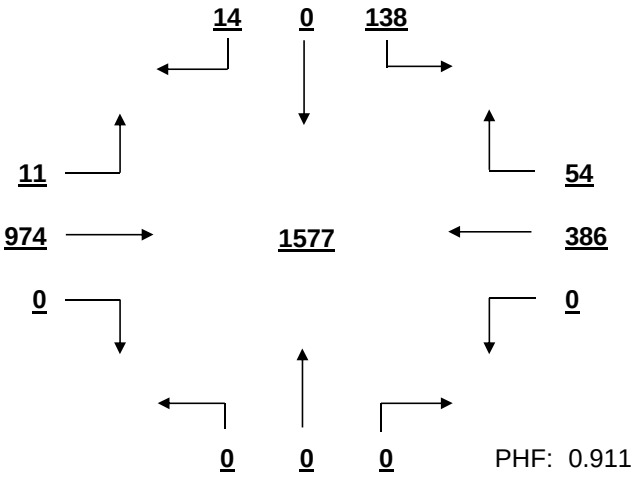

PHF: 0.911

PM PEAK HOUR VOLUME (14:15-23:45)
FROM 17:00 TO 18:00

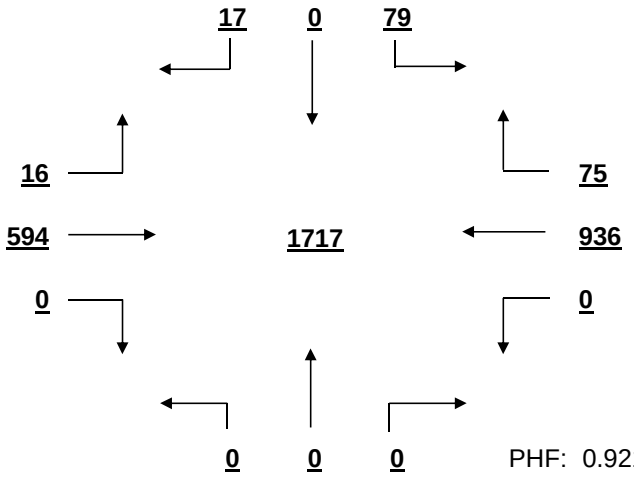

PHF: 0.921

MID-DAY PEAK HOUR VOLUME (11:00-14:00)
FROM 12:30 TO 13:30

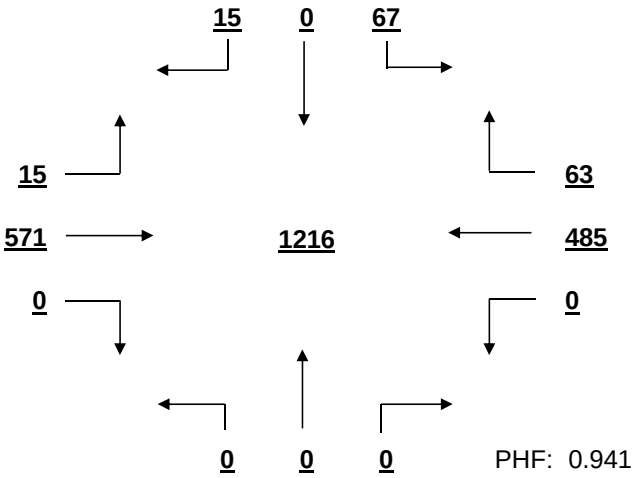

PHF: 0.941

OTHER HOUR VOLUME
FROM 7:00 TO 8:00

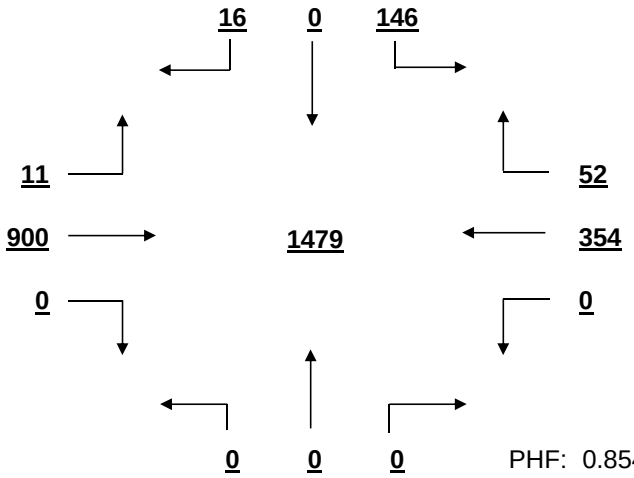

PHF: 0.854

SIGNAL WARRANT ANALYSIS

St. Andrews Rd AT Sidney Rd Date: 11/28/2016

Minor Street Volume, percent of total = 7.1%
Percent of Left Turns from Minor Street = 81.8%
Percent of Right Turns from Minor Street = 18.2%
Percent of Minor Street Right Turns to Remove from Warrant Analysis = 0%
WARRANT BASIS = **100%**

Warrant No. 1 - Vehicular Volume is met

Condition A - Minimum Vehicular Volume is not met

Average Major Street % of Warrant				Average Minor Street % of Warrant			
1148.7	/	600	= 191%	87.7	/	150	= 58%

Hourly percent of warrant

	7:00 - 8:00	8:00 - 9:00	9:00 - 10:00	10:00 - 11:00	11:00 - 12:00	12:00 - 13:00	13:00 - 14:00	14:00 - 15:00	15:00 - 16:00	16:00 - 17:00	17:00 - 18:00	18:00 - 19:00
Major St.	220%	194%	152%	146%	157%	188%	183%	178%	206%	225%	270%	179%
Minor St.	108%	65%	47%	43%	50%	50%	59%	53%	55%	64%	64%	44%

Condition B - Interruption to Continuous Traffic is met

Average Major Street % of Warrant				Average Minor Street % of Warrant			
1148.7	/	900	= 128%	87.7	/	75	= 117%

Hourly percent of warrant

	7:00 - 8:00	8:00 - 9:00	9:00 - 10:00	10:00 - 11:00	11:00 - 12:00	12:00 - 13:00	13:00 - 14:00	14:00 - 15:00	15:00 - 16:00	16:00 - 17:00	17:00 - 18:00	18:00 - 19:00
Major St.	146%	129%	101%	97%	105%	125%	122%	118%	138%	150%	180%	119%
Minor St.	216%	131%	93%	87%	100%	100%	117%	105%	109%	128%	128%	88%

80% Combination of Conditions A & B is not met

Warrant No. 2 - Four Hour Vehicular Volume is not met

Hourly percent of warrant

	7:00 - 8:00	8:00 - 9:00	9:00 - 10:00	10:00 - 11:00	11:00 - 12:00	12:00 - 13:00	13:00 - 14:00	14:00 - 15:00	15:00 - 16:00	16:00 - 17:00	17:00 - 18:00	18:00 - 19:00
Minor St.	179%	90%	42%	36%	47%	65%	72%	62%	83%	120%	120%	52%

Warrant No. 3 - Peak Hour is not met

Percent of warrant
Overall Peak Hour: 17:00 - 18:00
Minor St. 83%

Percent of warrant
Higher Volume Side Street Peak Hour: 7:00 - 8:00
Minor St. 90%

Warrant No. 4 - Pedestrian Volume. Pedestrian volume shown are minumum volumes assuming heavy major street traffic. If these volumes are met, warrant 4 requires further engineering analysis

Minimum 4 hour ped. volume crossing major street: 107

Minimum peak hour ped. volume crossing major street: 133

Number of pedestrians crossing major street

	7:00 - 8:00	8:00 - 9:00	9:00 - 10:00	10:00 - 11:00	11:00 - 12:00	12:00 - 13:00	13:00 - 14:00	14:00 - 15:00	15:00 - 16:00	16:00 - 17:00	17:00 - 18:00	18:00 - 19:00
Major St.	0	0	0	0	0	0	0	0	0	0	0	0

Warrant No. 7 - Crash Experience (Requires 3 criteria analysis by engineering)

Total Number: 0 From: 1/1/2005 to 1/1/2008
Accident Rate: 0.00 per million entering vehicles

Types of Accidents	No.	/	Avg.		No.	/	Avg.
Right Angle	0	/	0.0	Rear End	0	/	0.0
Lost Control	0	/	0.0	Side Swipe	0	/	0.0
Left Turn	0	/	0.0	Other	0	/	0.0

SOUTH CAROLINA DEPARTMENT OF TRANSPORTATION
DISTRICT 1
TRAFFIC ENGINEERING

County: Richland City: Columbia Date: 11/28/2016

Major Rt: St. Andrews Rd * Not on State System Minor Rt: Ashland Rd * Not on State System

Day of Week: Monday Weather: Clear Office: Short Counts JMS

Type of Control: Signal Speed Limit (major st) 40

Direction of Minor Street: N-S Intersection ADT - 21960 (Calc)

Number of Lanes (major st)* 2 Number of Lanes (minor st)* 1

* Each Direction

INTERSECTION VOLUME SUMMARY

	From N Ashland Rd				From S Ashland Rd				From E St. Andrews Rd				From W St. Andrews Rd				Total	Total
	LT	STR	RT	TOT	LT	STR	RT	TOT	LT	STR	RT	TOT	LT	STR	RT	TOT	Vol	Peds
7:00 - 7:15	0	0	0	0	10	0	26	36	27	69	0	96	0	181	31	212	344	4
7:15 - 7:30	0	0	0	0	32	1	49	82	37	84	0	121	0	220	49	269	472	2
7:30 - 7:45	0	0	0	0	37	0	65	102	42	93	0	135	1	271	47	319	556	2
7:45 - 8:00	0	0	0	0	23	0	45	68	17	121	0	138	0	262	29	291	497	1
8:00 - 8:15	0	0	0	0	15	0	33	48	21	111	1	133	0	259	26	285	466	1
8:15 - 8:30	0	0	0	0	14	0	39	53	25	107	0	132	1	224	14	239	424	7
8:30 - 8:45	0	0	0	0	10	0	16	26	17	90	0	107	0	189	17	206	339	0
8:45 - 9:00	0	0	0	0	17	0	21	38	16	118	0	134	1	161	10	172	344	2
9:00 - 9:15	0	0	0	0	20	0	23	43	15	93	0	108	0	153	15	168	319	1
9:15 - 9:30	1	0	0	1	13	0	20	33	13	97	0	110	0	115	16	131	275	6
9:30 - 9:45	0	0	1	1	15	0	24	39	12	110	0	122	1	127	11	139	301	5
9:45 - 10:00	0	0	0	0	12	0	12	24	8	117	0	125	0	113	5	118	267	0
10:00 - 10:15	0	0	1	1	12	0	19	31	7	124	0	131	0	112	14	126	289	1
10:15 - 10:30	0	0	0	0	17	0	27	44	17	104	0	121	0	138	15	153	318	6
10:30 - 10:45	1	0	0	1	16	0	10	26	12	111	0	123	1	119	8	128	278	0
10:45 - 11:00	1	0	1	2	19	0	23	42	7	112	0	119	0	133	11	144	307	5
11:00 - 11:15	0	0	0	0	11	0	17	28	14	128	0	142	0	129	10	139	309	0
11:15 - 11:30	0	0	0	0	20	0	18	38	10	142	0	152	3	126	17	146	336	4
11:30 - 11:45	0	0	2	2	19	0	21	40	11	136	1	148	0	150	25	175	365	4
11:45 - 12:00	0	0	0	0	22	0	28	50	26	145	0	171	0	146	18	164	385	2
12:00 - 12:15	0	0	2	2	26	0	29	55	18	146	0	164	0	151	22	173	394	8
12:15 - 12:30	1	0	1	2	35	0	19	54	33	161	0	194	0	171	20	191	441	5
12:30 - 12:45	0	0	0	0	18	0	29	47	22	171	1	194	0	174	25	199	440	5
12:45 - 13:00	0	0	0	0	22	0	28	50	25	150	0	175	0	169	23	192	417	8
13:00 - 13:15	0	1	0	1	26	0	26	52	23	152	0	175	0	170	19	189	417	2
13:15 - 13:30	0	0	0	0	31	0	27	58	21	147	0	168	1	192	21	214	440	2
13:30 - 13:45	0	0	0	0	28	0	37	65	20	157	1	178	0	161	27	188	431	2
13:45 - 14:00	0	1	0	1	18	1	29	48	26	161	0	187	0	159	21	180	416	6
14:00 - 14:15	0	0	0	0	11	0	33	44	21	130	1	152	0	164	19	183	379	2
14:15 - 14:30	0	1	0	1	22	0	25	47	20	163	0	183	0	141	29	170	401	4
14:30 - 14:45	0	0	0	0	29	0	30	59	19	154	0	173	0	148	21	169	401	5
14:45 - 15:00	1	3	1	5	30	1	45	76	33	144	0	177	0	153	19	172	430	2
15:00 - 15:15	1	0	0	1	33	0	29	62	23	172	0	195	0	202	17	219	477	8
15:15 - 15:30	0	3	0	3	28	0	27	55	22	163	0	185	0	141	24	165	408	0
15:30 - 15:45	0	1	0	1	32	0	29	61	28	200	0	228	0	181	15	196	486	4
15:45 - 16:00	0	0	0	0	23	0	26	49	27	194	0	221	2	166	18	186	456	2
16:00 - 16:15	0	1	0	1	36	0	34	70	21	182	0	203	0	186	19	205	479	10
16:15 - 16:30	1	2	0	3	30	0	35	65	23	185	0	208	0	166	30	196	472	4
16:30 - 16:45	0	1	0	1	30	0	23	53	31	218	0	249	0	139	20	159	462	3
16:45 - 17:00	0	1	0	1	35	0	32	67	26	238	0	264	0	177	30	207	539	1
17:00 - 17:15	1	0	2	3	36	0	39	75	27	215	0	242	0	188	27	215	535	6
17:15 - 17:30	0	1	0	1	41	0	36	77	17	291	0	308	1	183	29	213	599	7
17:30 - 17:45	3	1	0	4	36	0	31	67	41	249	0	290	1	148	13	162	523	1
17:45 - 18:00	0	0	1	1	42	0	39	81	20	218	0	238	0	161	21	182	502	1
18:00 - 18:15	1	0	2	3	25	0	33	58	15	182	0	197	0	159	13	172	430	1
18:15 - 18:30	0	2	0	2	21	1	26	48	25	218	0	243	0	136	12	148	441	0
18:30 - 18:45	0	0	0	0	23	0	24	47	20	181	0	201	0	126	12	138	386	3
18:45 - 19:00	0	0	0	0	16	0	18	34	12	142	0	154	0	116	15	131	319	2
TOTAL	12	19	14	45	1137	4	1374	2515	1013	7296	5	8314	13	7856	969	8838	19712	157
Trucks	0	0	0	0	3	0	11	14	10	122	1	133	0	139	6	145	292	1.5%
School Buses	1	17	0	18	9	0	5	14	2	13	0	15	0	27	11	38	85	0.4%

TOTAL AND PEAK HOUR VOLUME DIAGRAMS

St. Andrews Rd AT Ashland Rd Date: 11/28/2016

12.0 HOUR TOTAL VOLUME
FROM 7:00 TO 15:00

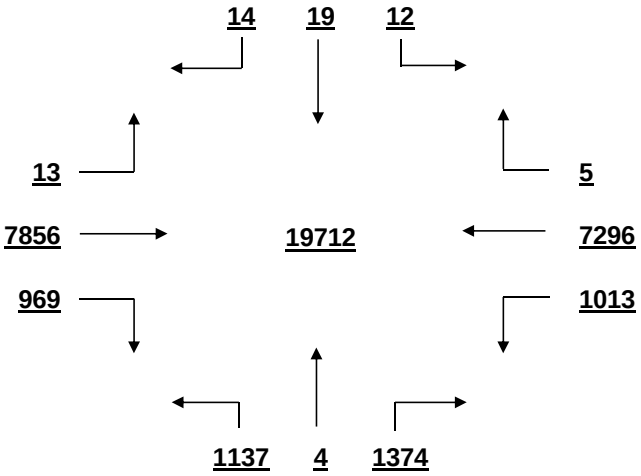

OVERALL PEAK HOUR VOLUME
FROM 16:45 TO 17:45

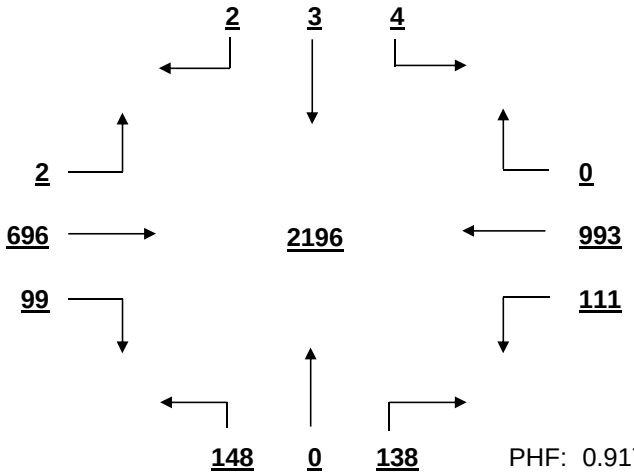

PHF: 0.917

AM PEAK HOUR VOLUME (0:00-10:45)
FROM 7:15 TO 8:15

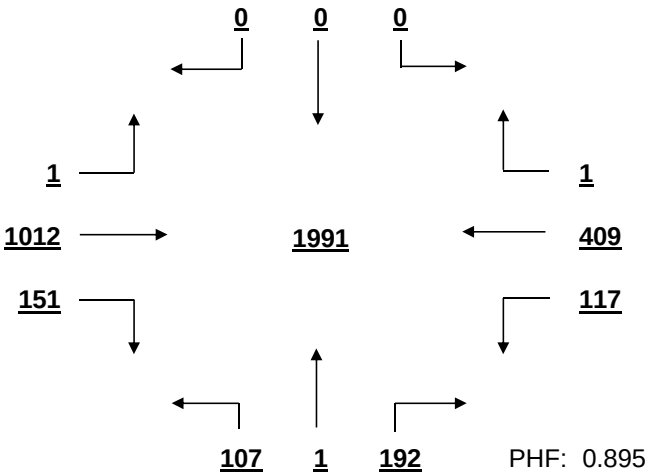

PHF: 0.895

PM PEAK HOUR VOLUME (14:15-23:45)
FROM 16:45 TO 17:45

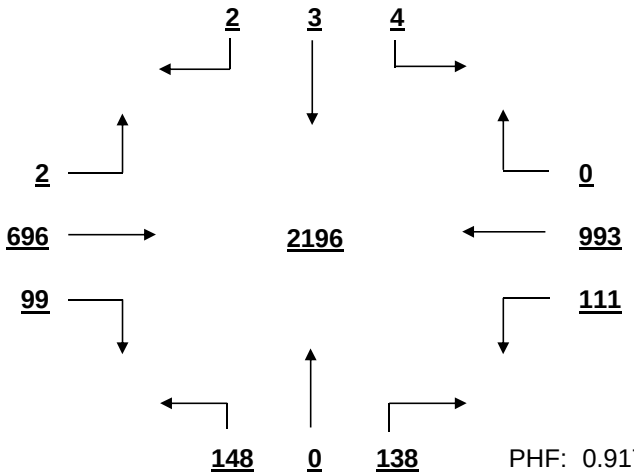

PHF: 0.917

MID-DAY PEAK HOUR VOLUME (11:00-14:00)
FROM 12:15 TO 13:15

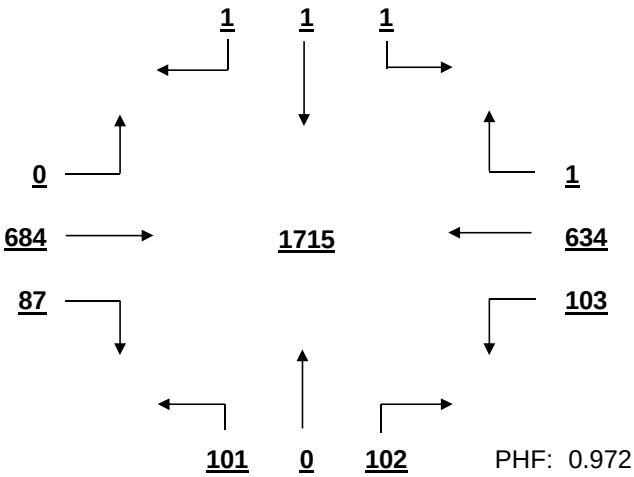

PHF: 0.972

OTHER HOUR VOLUME
FROM 7:00 TO 8:00

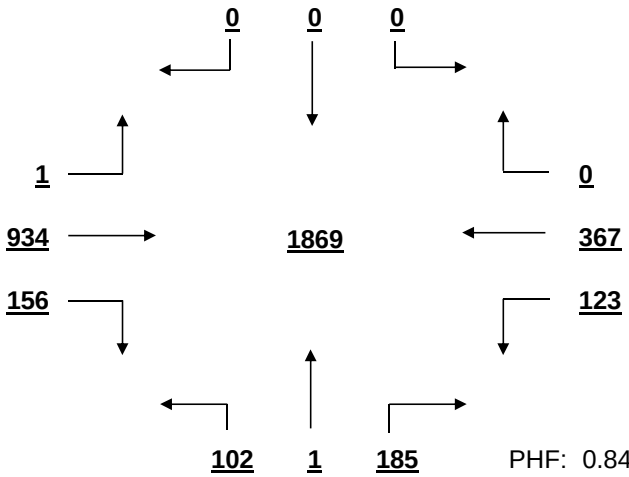

PHF: 0.840

SIGNAL WARRANT ANALYSIS

St. Andrews Rd AT Ashland Rd Date: 11/28/2016

Minor Street Volume, percent of total = 13.0%
Percent of Left Turns from Minor Street = 44.9%
Percent of Right Turns from Minor Street = 54.2%
Percent of Minor Street Right Turns to Remove from Warrant Analysis = 0%
WARRANT BASIS = **100%**

Warrant No. 1 - Vehicular Volume is met

Condition A - Minimum Vehicular Volume is met

Average Major Street % of Warrant				Average Minor Street % of Warrant			
1429.3	/	600 =	238%	209.6	/	150 =	140%

Hourly percent of warrant

	7:00 - 8:00	8:00 - 9:00	9:00 - 10:00	10:00 - 11:00	11:00 - 12:00	12:00 - 13:00	13:00 - 14:00	14:00 - 15:00	15:00 - 16:00	16:00 - 17:00	17:00 - 18:00	18:00 - 19:00
Major St.	264%	235%	170%	174%	206%	247%	247%	230%	266%	282%	308%	231%
Minor St.	192%	110%	93%	95%	104%	137%	149%	151%	151%	170%	200%	125%

Condition B - Interruption to Continuous Traffic is met

Average Major Street % of Warrant				Average Minor Street % of Warrant			
1429.3	/	900 =	159%	209.6	/	75 =	279%

Hourly percent of warrant

	7:00 - 8:00	8:00 - 9:00	9:00 - 10:00	10:00 - 11:00	11:00 - 12:00	12:00 - 13:00	13:00 - 14:00	14:00 - 15:00	15:00 - 16:00	16:00 - 17:00	17:00 - 18:00	18:00 - 19:00
Major St.	176%	156%	113%	116%	137%	165%	164%	153%	177%	188%	206%	154%
Minor St.	384%	220%	185%	191%	208%	275%	297%	301%	303%	340%	400%	249%

80% Combination of Conditions A & B is met

Warrant No. 2 - Four Hour Vehicular Volume is met

Hourly percent of warrant

	7:00 - 8:00	8:00 - 9:00	9:00 - 10:00	10:00 - 11:00	11:00 - 12:00	12:00 - 13:00	13:00 - 14:00	14:00 - 15:00	15:00 - 16:00	16:00 - 17:00	17:00 - 18:00	18:00 - 19:00
Minor St.	360%	206%	101%	108%	158%	258%	279%	283%	284%	319%	375%	234%

Warrant No. 3 - Peak Hour is met

	Percent of warrant		Percent of warrant
Overall Peak Hour:	16:45 - 17:45	Higher Volume Side Street Peak Hour:	7:15 - 8:15
Minor St.	286%	Minor St.	283%

Warrant No. 4 - Pedestrian Volume. Pedestrian volume shown are minumum volumes assuming heavy major street traffic. If these volumes are met, warrant 4 requires further engineering analysis

Minimum 4 hour ped. volume crossing major street	Minimum peak hour ped. volume crossing major street
107	133

Number of pedestrians crossing major street

	7:00 - 8:00	8:00 - 9:00	9:00 - 10:00	10:00 - 11:00	11:00 - 12:00	12:00 - 13:00	13:00 - 14:00	14:00 - 15:00	15:00 - 16:00	16:00 - 17:00	17:00 - 18:00	18:00 - 19:00
Major St.	0	6	3	5	2	5	2	0	0	0	2	0

Warrant No. 7 - Crash Experience (Requires 3 criteria analysis by engineering)

Total Number: 0 From: 1/1/2005 to 1/1/2008
Accident Rate: 0.00 per million entering vehicles

Types of Accidents	No.	/	Avg.		No.	/	Avg.
Right Angle	0	/	0.0	Rear End	0	/	0.0
Lost Control	0	/	0.0	Side Swipe	0	/	0.0
Left Turn	0	/	0.0	Other	0	/	0.0

SOUTH CAROLINA DEPARTMENT OF TRANSPORTATION
DISTRICT 1
TRAFFIC ENGINEERING

County: Richland City: Columbia Date: 11/28/2016

Major Rt: St. Andrews Rd * Not on State System Minor Rt: Kilbrannon Dr-St Andrews Apts * Not on State System

Day of Week: Monday Weather: Clear Office: Short Counts JMS

Type of Control: Signal Speed Limit (major st) 40

Direction of Minor Street: N-S Intersection ADT - 20170 (Calc)

Number of Lanes (major st)* 2 Number of Lanes (minor st)* 1 * Each Direction

INTERSECTION VOLUME SUMMARY

	From N Kilbrannon Dr-St A				From S Kilbrannon Dr-St A				From E St. Andrews Rd				From W St. Andrews Rd				Total	Total
	LT	STR	RT	TOT	LT	STR	RT	TOT	LT	STR	RT	TOT	LT	STR	RT	TOT	Vol	Peds
7:00 - 7:15	3	0	1	4	1	0	10	11	8	94	5	107	3	189	5	197	319	2
7:15 - 7:30	6	0	5	11	0	1	15	16	11	108	4	123	3	254	3	260	410	1
7:30 - 7:45	7	0	7	14	1	0	20	21	17	129	3	149	7	325	7	339	523	0
7:45 - 8:00	7	1	2	10	3	1	11	15	7	130	6	143	2	297	12	311	479	1
8:00 - 8:15	1	0	10	11	0	0	11	11	10	124	7	141	2	274	3	279	442	0
8:15 - 8:30	5	0	0	5	0	0	21	21	10	125	3	138	2	266	7	275	439	0
8:30 - 8:45	5	0	3	8	3	0	11	14	8	105	1	114	2	203	2	207	343	0
8:45 - 9:00	1	0	3	4	3	0	13	16	7	128	1	136	1	168	9	178	334	1
9:00 - 9:15	3	0	3	6	2	0	12	14	13	102	1	116	2	178	6	186	322	0
9:15 - 9:30	3	0	3	6	2	0	12	14	12	101	5	118	1	133	2	136	274	3
9:30 - 9:45	5	0	3	8	2	0	8	10	12	119	3	134	2	140	2	144	296	3
9:45 - 10:00	1	0	1	2	2	0	13	15	10	127	1	138	1	125	5	131	286	3
10:00 - 10:15	4	1	1	6	5	0	7	12	12	125	1	138	4	120	5	129	285	1
10:15 - 10:30	6	0	3	9	4	0	5	9	12	114	1	127	1	156	1	158	303	0
10:30 - 10:45	4	0	4	8	9	0	5	14	8	111	4	123	2	130	4	136	281	0
10:45 - 11:00	3	0	2	5	1	0	12	13	9	113	4	126	1	140	7	148	292	2
11:00 - 11:15	2	0	2	4	0	0	15	15	14	148	1	163	0	139	2	141	323	1
11:15 - 11:30	2	0	3	5	2	0	12	14	15	134	3	152	0	118	7	125	296	0
11:30 - 11:45	6	0	2	8	2	0	12	14	14	145	4	163	2	144	5	151	336	6
11:45 - 12:00	4	0	0	4	2	0	12	14	6	169	6	181	5	171	6	182	381	1
12:00 - 12:15	1	2	1	4	3	0	14	17	20	152	10	182	0	165	5	170	373	6
12:15 - 12:30	1	1	4	6	9	0	23	32	14	170	7	191	2	184	3	189	418	0
12:30 - 12:45	2	0	0	2	6	0	17	23	13	182	4	199	1	173	4	178	402	1
12:45 - 13:00	6	0	2	8	5	0	32	37	12	173	3	188	3	190	6	199	432	1
13:00 - 13:15	4	1	4	9	2	0	24	26	20	166	8	194	1	183	6	190	419	2
13:15 - 13:30	4	2	2	8	5	0	16	21	16	163	2	181	1	198	5	204	414	2
13:30 - 13:45	5	0	1	6	2	1	15	18	8	159	4	171	4	192	9	205	400	0
13:45 - 14:00	5	0	3	8	5	0	22	27	13	182	1	196	4	184	2	190	421	0
14:00 - 14:15	5	1	1	7	2	0	17	19	11	154	4	169	0	182	3	185	380	1
14:15 - 14:30	6	0	2	8	1	0	16	17	16	174	4	194	1	162	4	167	386	1
14:30 - 14:45	2	0	5	7	5	2	25	32	10	163	5	178	3	170	5	178	395	1
14:45 - 15:00	4	0	3	7	1	2	13	16	4	176	7	187	2	184	4	190	400	0
15:00 - 15:15	5	0	6	11	2	0	11	13	11	185	5	201	3	219	7	229	454	2
15:15 - 15:30	5	0	4	9	2	1	14	17	12	180	3	195	6	162	2	170	391	1
15:30 - 15:45	6	0	7	13	1	0	16	17	10	191	8	209	3	185	2	190	429	3
15:45 - 16:00	5	1	2	8	5	0	11	16	6	206	2	214	3	183	3	189	427	3
16:00 - 16:15	6	0	5	11	8	1	1	10	7	199	9	215	4	187	1	192	428	4
16:15 - 16:30	5	0	1	6	6	0	2	8	6	216	10	232	2	157	0	159	405	1
16:30 - 16:45	6	0	5	11	9	0	4	13	11	231	8	250	1	144	0	145	419	1
16:45 - 17:00	3	0	3	6	11	0	1	12	11	256	10	277	2	165	5	172	467	0
17:00 - 17:15	5	0	4	9	1	0	20	21	5	243	3	251	3	210	6	219	500	1
17:15 - 17:30	0	0	7	7	3	0	9	12	7	291	4	302	2	198	3	203	524	2
17:30 - 17:45	10	0	6	16	1	0	12	13	5	283	8	296	2	183	2	187	512	1
17:45 - 18:00	3	0	3	6	3	0	7	10	8	237	12	257	7	197	4	208	481	2
18:00 - 18:15	8	1	2	11	4	1	12	17	18	241	4	263	5	180	3	188	479	1
18:15 - 18:30	12	0	3	15	2	0	6	8	3	293	4	300	2	150	5	157	480	0
18:30 - 18:45	5	0	3	8	2	0	14	16	10	284	8	302	5	147	4	156	482	2
18:45 - 19:00	5	0	6	11	4	0	8	12	3	248	12	263	5	120	5	130	416	3
TOTAL	212	11	153	376	154	10	619	783	505	8249	233	8987	120	8624	208	8952	19098	67
Trucks	0	0	0	0	1	0	3	4	4	171	7	182	0	172	0	172	358	1.9%
School Buses	0	0	1	1	0	0	0	0	0	20	2	22	1	19	0	20	43	0.2%

TOTAL AND PEAK HOUR VOLUME DIAGRAMS

St. Andrews Rd AT Kilbrannon Dr-St Andrews Apts Date: 11/28/2016

12.0 HOUR TOTAL VOLUME
FROM 7:00 TO 15:00

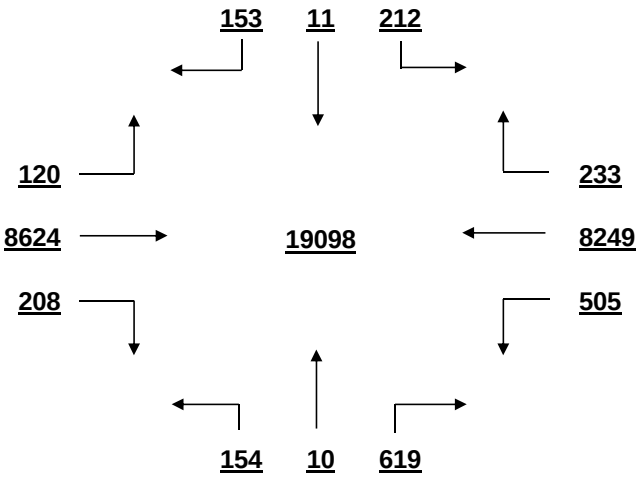

OVERALL PEAK HOUR VOLUME
FROM 17:00 TO 18:00

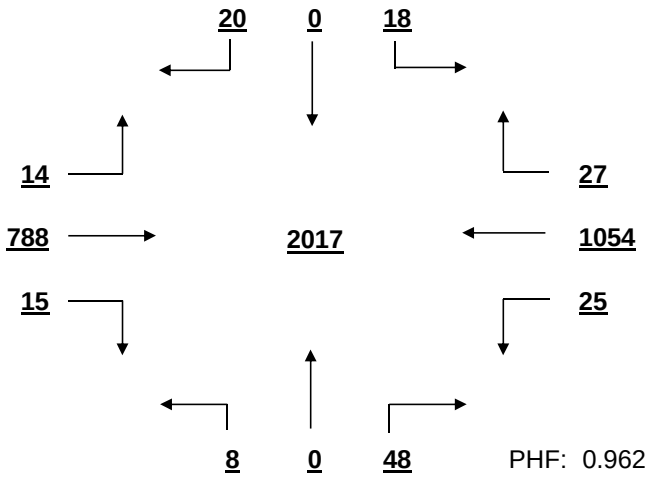

PHF: 0.962

AM PEAK HOUR VOLUME (0:00-10:45)
FROM 7:30 TO 8:30

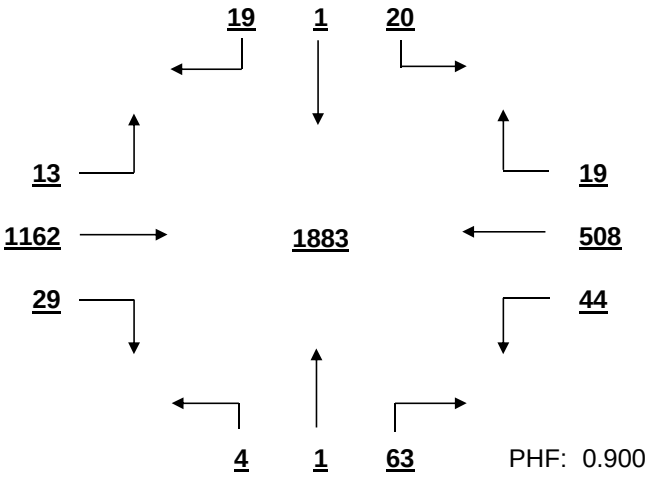

PHF: 0.900

PM PEAK HOUR VOLUME (14:15-23:45)
FROM 17:00 TO 18:00

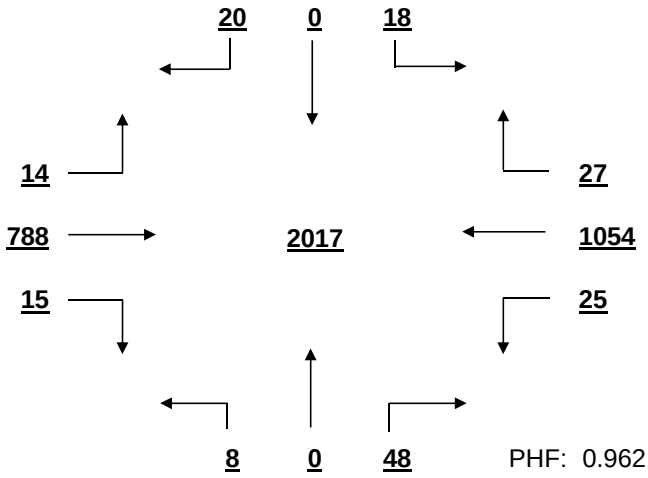

PHF: 0.962

MID-DAY PEAK HOUR VOLUME (11:00-14:00)
FROM 12:15 TO 13:15

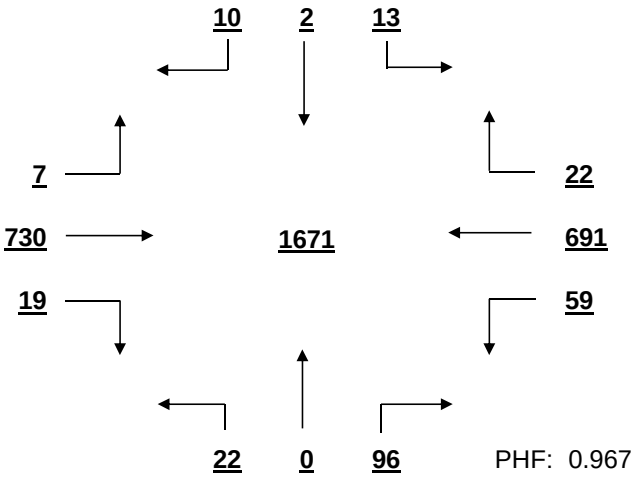

PHF: 0.967

OTHER HOUR VOLUME
FROM 7:00 TO 8:00

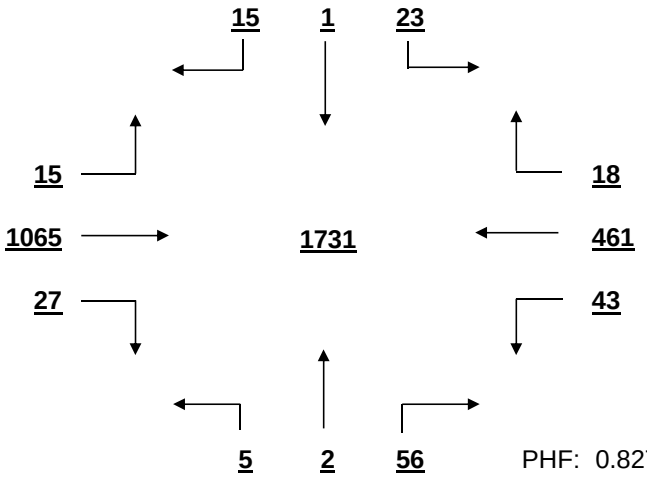

PHF: 0.827

SIGNAL WARRANT ANALYSIS

St. Andrews Rd AT Kilbrannon Dr-St Andrews Apts Date: 11/28/2016

Minor Street Volume, percent of total = 6.1%
Percent of Left Turns from Minor Street = 31.6%
Percent of Right Turns from Minor Street = 66.6%
Percent of Minor Street Right Turns to Remove from Warrant Analysis = 0%
WARRANT BASIS = **100%**

Warrant No. 1 - Vehicular Volume is not met

Condition A - Minimum Vehicular Volume is not met

Average Major Street % of Warrant				Average Minor Street % of Warrant			
1494.9	/ 600	=	249%	65.3	/ 150	=	44%

Hourly percent of warrant

	7:00 - 8:00	8:00 - 9:00	9:00 - 10:00	10:00 - 11:00	11:00 - 12:00	12:00 - 13:00	13:00 - 14:00	14:00 - 15:00	15:00 - 16:00	16:00 - 17:00	17:00 - 18:00	18:00 - 19:00
Major St.	272%	245%	184%	181%	210%	249%	255%	241%	266%	274%	321%	293%
Minor St.	42%	41%	35%	32%	38%	73%	61%	56%	42%	29%	37%	35%

Condition B - Interruption to Continuous Traffic is not met

Average Major Street % of Warrant				Average Minor Street % of Warrant			
1494.9	/ 900	=	166%	65.3	/ 75	=	87%

Hourly percent of warrant

	7:00 - 8:00	8:00 - 9:00	9:00 - 10:00	10:00 - 11:00	11:00 - 12:00	12:00 - 13:00	13:00 - 14:00	14:00 - 15:00	15:00 - 16:00	16:00 - 17:00	17:00 - 18:00	18:00 - 19:00
Major St.	181%	163%	123%	121%	140%	166%	170%	161%	177%	182%	214%	195%
Minor St.	84%	83%	71%	64%	76%	145%	123%	112%	84%	57%	75%	71%

80% Combination of Conditions A & B is not met

Warrant No. 2 - Four Hour Vehicular Volume is not met

Hourly percent of warrant

	7:00 - 8:00	8:00 - 9:00	9:00 - 10:00	10:00 - 11:00	11:00 - 12:00	12:00 - 13:00	13:00 - 14:00	14:00 - 15:00	15:00 - 16:00	16:00 - 17:00	17:00 - 18:00	18:00 - 19:00
Minor St.	79%	78%	44%	39%	59%	136%	115%	105%	79%	54%	70%	66%

Warrant No. 3 - Peak Hour is not met

	Percent of warrant		Percent of warrant
Overall Peak Hour:	17:00 - 18:00	Higher Volume Side Street Peak Hour:	12:15 - 13:15
Minor St.	56%	Minor St.	89%

Warrant No. 4 - Pedestrian Volume. Pedestrian volume shown are minumum volumes assuming heavy major street traffic. If these volumes are met, warrant 4 requires further engineering analysis

Minimum 4 hour ped. volume crossing major street	Minimum peak hour ped. volume crossing major street
107	133

Number of pedestrians crossing major street

	7:00 - 8:00	8:00 - 9:00	9:00 - 10:00	10:00 - 11:00	11:00 - 12:00	12:00 - 13:00	13:00 - 14:00	14:00 - 15:00	15:00 - 16:00	16:00 - 17:00	17:00 - 18:00	18:00 - 19:00
Major St.	0	0	1	0	4	1	2	1	0	0	0	0

Warrant No. 7 - Crash Experience (Requires 3 criteria analysis by engineering)

Total Number: 0 From: 1/1/2005 to 1/1/2008
Accident Rate: 0.00 per million entering vehicles

Types of Accidents	No.	/	Avg.		No.	/	Avg.
Right Angle	0	/	0.0	Rear End	0	/	0.0
Lost Control	0	/	0.0	Side Swipe	0	/	0.0
Left Turn	0	/	0.0	Other	0	/	0.0

SOUTH CAROLINA DEPARTMENT OF TRANSPORTATION
DISTRICT 1
TRAFFIC ENGINEERING

County: Richland City: Columbia Date: 11/28/2016

Major Rt: St. Andrews Rd * Not on State System Minor Rt: Jamil Rd * Not on State System

Day of Week: Monday Weather: Clear Office: Short Counts JMS

Type of Control: Signal Speed Limit (major st) 40

Direction of Minor Street: N-S Intersection ADT - 23890 (Calc)

Number of Lanes (major st)* 2 Number of Lanes (minor st)* 1

* Each Direction

INTERSECTION VOLUME SUMMARY

	From N Jamil Rd				From S Jamil Rd				From E St. Andrews Rd				From W St. Andrews Rd				Total	Total
	LT	STR	RT	TOT	LT	STR	RT	TOT	LT	STR	RT	TOT	LT	STR	RT	TOT	Vol	Peds
7:00 - 7:15	17	0	9	26	0	0	0	0	0	91	12	103	2	193	0	195	324	3
7:15 - 7:30	30	0	14	44	0	0	0	0	1	114	15	130	7	263	1	271	445	1
7:30 - 7:45	54	0	17	71	0	0	0	0	0	123	27	150	5	337	0	342	563	0
7:45 - 8:00	62	0	8	70	0	0	0	0	0	144	18	162	4	313	0	317	549	1
8:00 - 8:15	60	0	13	73	0	0	0	0	0	131	18	149	4	296	0	300	522	0
8:15 - 8:30	47	0	0	47	0	0	0	0	0	127	25	152	5	285	0	290	489	0
8:30 - 8:45	25	0	7	32	0	0	0	0	0	108	24	132	3	217	0	220	384	1
8:45 - 9:00	33	0	5	38	0	0	0	0	0	147	31	178	5	184	0	189	405	1
9:00 - 9:15	26	0	5	31	0	0	0	0	0	117	37	154	7	187	0	194	379	0
9:15 - 9:30	38	0	4	42	0	0	0	0	0	112	31	143	2	147	0	149	334	1
9:30 - 9:45	33	0	6	39	0	0	0	0	0	135	25	160	10	153	0	163	362	2
9:45 - 10:00	34	0	9	43	0	0	0	0	0	137	45	182	3	133	0	136	361	1
10:00 - 10:15	26	0	9	35	0	0	0	0	0	122	23	145	5	124	0	129	309	0
10:15 - 10:30	29	0	9	38	0	0	0	0	0	118	32	150	9	165	0	174	362	1
10:30 - 10:45	38	0	9	47	0	0	0	0	0	130	31	161	5	140	0	145	353	2
10:45 - 11:00	28	0	11	39	0	0	0	0	0	115	24	139	9	152	0	161	339	1
11:00 - 11:15	32	0	12	44	0	0	0	0	0	155	25	180	15	158	0	173	397	1
11:15 - 11:30	28	0	9	37	0	0	0	0	0	163	31	194	12	146	0	158	389	1
11:30 - 11:45	29	0	14	43	0	0	0	0	0	167	55	222	15	175	0	190	455	0
11:45 - 12:00	43	0	18	61	0	0	0	0	0	165	43	208	9	184	0	193	462	2
12:00 - 12:15	41	0	7	48	0	0	0	0	0	193	44	237	9	163	0	172	457	4
12:15 - 12:30	44	0	9	53	0	0	0	0	0	211	33	244	10	206	0	216	513	0
12:30 - 12:45	40	0	24	64	0	0	0	0	0	203	36	239	10	205	0	215	518	0
12:45 - 13:00	46	0	20	66	0	0	0	0	0	182	45	227	12	239	0	251	544	1
13:00 - 13:15	54	0	9	63	0	0	0	0	0	191	42	233	13	225	0	238	534	0
13:15 - 13:30	57	0	19	76	0	0	1	1	0	177	60	237	8	213	1	222	536	1
13:30 - 13:45	43	0	19	62	1	0	0	1	0	166	42	208	11	220	1	232	503	1
13:45 - 14:00	58	0	21	79	0	0	1	1	0	186	44	230	12	230	1	243	553	3
14:00 - 14:15	51	0	13	64	0	0	0	0	0	166	39	205	15	206	0	221	490	2
14:15 - 14:30	49	0	18	67	0	0	0	0	0	195	59	254	12	168	0	180	501	0
14:30 - 14:45	38	0	17	55	0	0	0	0	0	170	49	219	17	190	0	207	481	3
14:45 - 15:00	43	0	14	57	0	0	0	0	0	176	41	217	18	199	0	217	491	3
15:00 - 15:15	60	0	18	78	0	0	0	0	0	193	35	228	11	238	0	249	555	3
15:15 - 15:30	60	0	13	73	0	0	0	0	0	201	33	234	10	183	1	194	501	1
15:30 - 15:45	47	0	8	55	0	0	0	0	0	202	51	253	14	216	0	230	538	5
15:45 - 16:00	31	0	11	42	0	0	1	1	0	201	53	254	8	212	1	221	518	3
16:00 - 16:15	61	0	22	83	0	0	0	0	1	211	62	274	9	208	0	217	574	2
16:15 - 16:30	62	0	12	74	0	0	0	0	0	234	62	296	14	221	0	235	605	5
16:30 - 16:45	52	0	24	76	0	0	0	0	0	229	72	301	16	188	0	204	581	3
16:45 - 17:00	43	0	19	62	0	0	0	0	0	274	54	328	9	194	0	203	593	1
17:00 - 17:15	55	1	14	70	0	0	0	0	0	244	51	295	13	206	0	219	584	3
17:15 - 17:30	40	0	10	50	0	0	0	0	0	294	74	368	9	204	0	213	631	2
17:30 - 17:45	41	0	15	56	0	0	0	0	0	242	54	296	10	187	0	197	549	4
17:45 - 18:00	33	0	13	46	0	0	0	0	0	260	67	327	20	206	0	226	599	0
18:00 - 18:15	54	0	10	64	0	0	0	0	0	210	65	275	16	195	0	211	550	0
18:15 - 18:30	36	0	9	45	0	0	0	0	0	249	63	312	12	176	0	188	545	1
18:30 - 18:45	36	0	10	46	0	0	0	0	0	209	43	252	10	167	0	177	475	2
18:45 - 19:00	23	0	6	29	0	0	0	0	0	166	30	196	7	146	0	153	378	2
TOTAL	2010	1	592	2603	1	0	3	4	2	8456	1975	10433	471	9563	6	10040	23080	74
Trucks	26	1	6	33	0	0	0	0	0	123	22	145	5	156	2	163	341	1.5%
School Buses	8	0	3	11	0	0	0	0	0	13	15	28	1	30	0	31	70	0.3%

TOTAL AND PEAK HOUR VOLUME DIAGRAMS

St. Andrews Rd AT Jamil Rd Date: 11/28/2016

12.0 HOUR TOTAL VOLUME
FROM 7:00 TO 15:00

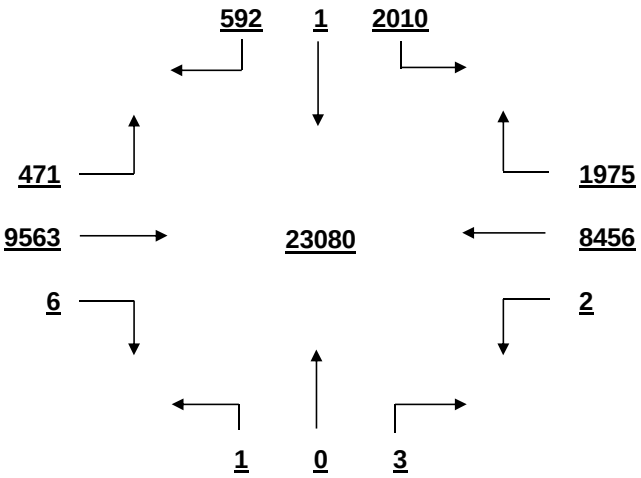

OVERALL PEAK HOUR VOLUME
FROM 16:30 TO 17:30

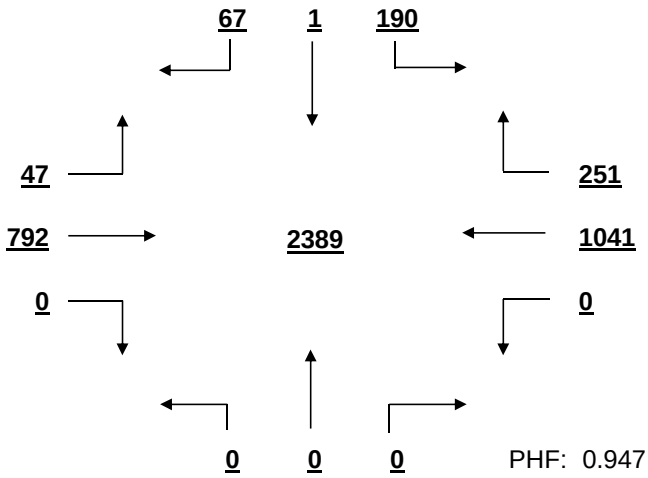

PHF: 0.947

AM PEAK HOUR VOLUME (0:00-10:45)
FROM 7:30 TO 8:30

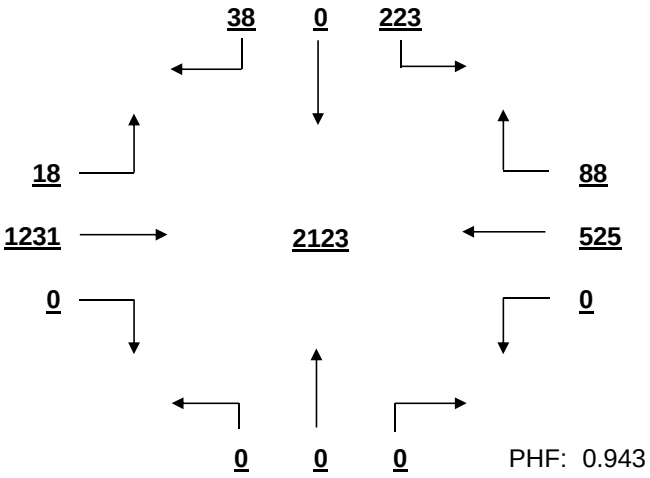

PHF: 0.943

PM PEAK HOUR VOLUME (14:15-23:45)
FROM 16:30 TO 17:30

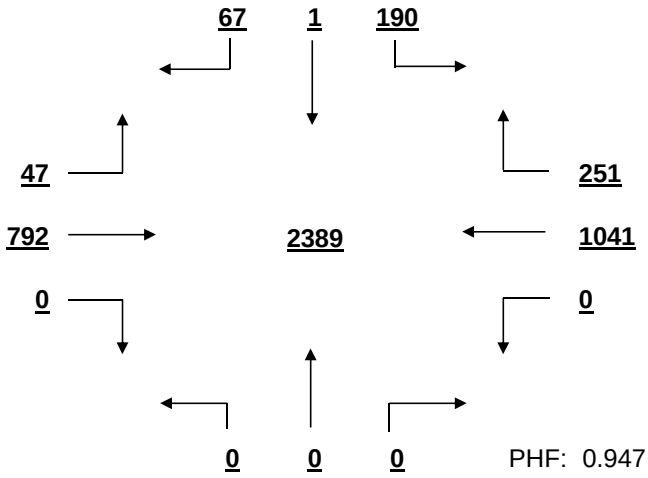

PHF: 0.947

MID-DAY PEAK HOUR VOLUME (11:00-14:00)
FROM 12:30 TO 13:30

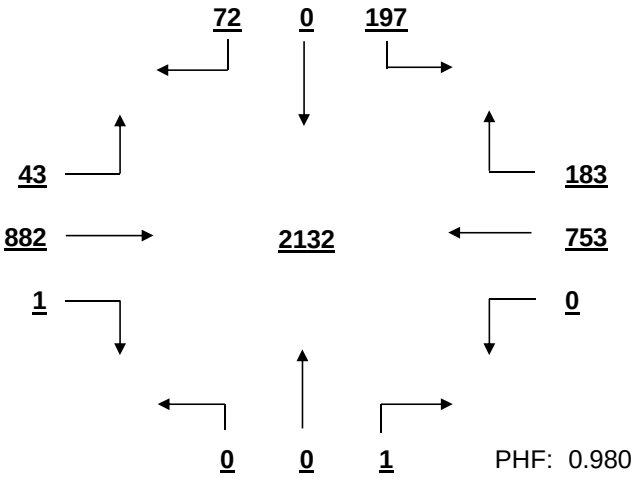

PHF: 0.980

OTHER HOUR VOLUME
FROM 7:00 TO 8:00

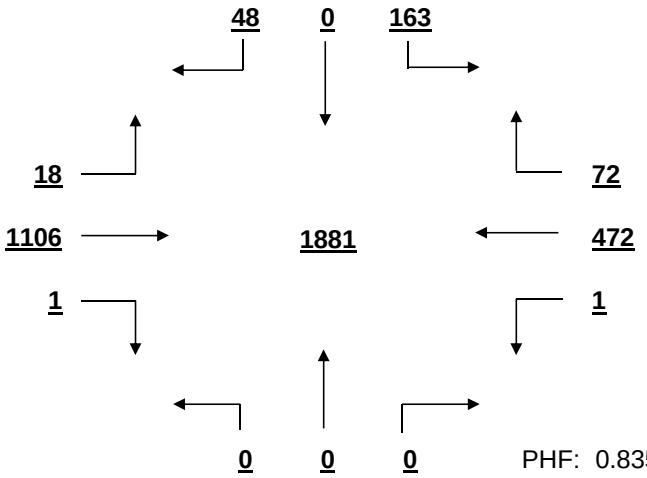

PHF: 0.835

SIGNAL WARRANT ANALYSIS

St. Andrews Rd AT Jamil Rd Date: 11/28/2016

Minor Street Volume, percent of total = 11.3%
Percent of Left Turns from Minor Street = 77.1%
Percent of Right Turns from Minor Street = 22.8%
Percent of Minor Street Right Turns to Remove from Warrant Analysis = 0%
WARRANT BASIS = **100%**

Warrant No. 1 - Vehicular Volume is met

Condition A - Minimum Vehicular Volume is met

Average Major Street % of Warrant				Average Minor Street % of Warrant			
1706.1	/ 600	=	284%	216.9	/ 150	=	145%

Hourly percent of warrant

	7:00 - 8:00	8:00 - 9:00	9:00 - 10:00	10:00 - 11:00	11:00 - 12:00	12:00 - 13:00	13:00 - 14:00	14:00 - 15:00	15:00 - 16:00	16:00 - 17:00	17:00 - 18:00	18:00 - 19:00
Major St.	278%	268%	214%	201%	253%	300%	307%	287%	311%	343%	357%	294%
Minor St.	141%	127%	103%	106%	123%	154%	187%	162%	165%	197%	148%	123%

Condition B - Interruption to Continuous Traffic is met

Average Major Street % of Warrant				Average Minor Street % of Warrant			
1706.1	/ 900	=	190%	216.9	/ 75	=	289%

Hourly percent of warrant

	7:00 - 8:00	8:00 - 9:00	9:00 - 10:00	10:00 - 11:00	11:00 - 12:00	12:00 - 13:00	13:00 - 14:00	14:00 - 15:00	15:00 - 16:00	16:00 - 17:00	17:00 - 18:00	18:00 - 19:00
Major St.	186%	179%	142%	134%	169%	200%	205%	191%	207%	229%	238%	196%
Minor St.	281%	253%	207%	212%	247%	308%	373%	324%	331%	393%	296%	245%

80% Combination of Conditions A & B is met

Warrant No. 2 - Four Hour Vehicular Volume is met

Hourly percent of warrant

	7:00 - 8:00	8:00 - 9:00	9:00 - 10:00	10:00 - 11:00	11:00 - 12:00	12:00 - 13:00	13:00 - 14:00	14:00 - 15:00	15:00 - 16:00	16:00 - 17:00	17:00 - 18:00	18:00 - 19:00
Minor St.	264%	238%	166%	154%	231%	289%	350%	304%	310%	369%	278%	230%

Warrant No. 3 - Peak Hour is met

	Percent of warrant		Percent of warrant
Overall Peak Hour:	16:30 - 17:30	Higher Volume Side Street Peak Hour:	16:00 - 17:00
Minor St.	258%	Minor St.	295%

Warrant No. 4 - Pedestrian Volume. Pedestrian volume shown are minumum volumes assuming heavy major street traffic. If these volumes are met, warrant 4 requires further engineering analysis

Minimum 4 hour ped. volume crossing major street: 107

Minimum peak hour ped. volume crossing major street: 133

Number of pedestrians crossing major street

	7:00 - 8:00	8:00 - 9:00	9:00 - 10:00	10:00 - 11:00	11:00 - 12:00	12:00 - 13:00	13:00 - 14:00	14:00 - 15:00	15:00 - 16:00	16:00 - 17:00	17:00 - 18:00	18:00 - 19:00
Major St.	0	0	0	2	0	0	0	0	0	0	0	0

Warrant No. 7 - Crash Experience (Requires 3 criteria analysis by engineering)

Total Number: 0 From: 1/1/2005 to 1/1/2008
Accident Rate: 0.00 per million entering vehicles

Types of Accidents	No.	/	Avg.		No.	/	Avg.
Right Angle	0	/	0.0	Rear End	0	/	0.0
Lost Control	0	/	0.0	Side Swipe	0	/	0.0
Left Turn	0	/	0.0	Other	0	/	0.0

SOUTH CAROLINA DEPARTMENT OF TRANSPORTATION
DISTRICT 1
TRAFFIC ENGINEERING

County: Richland City: Columbia Date: 11/28/2016

Major Rt: Woodland Hills Rd * Not on State System Minor Rt: Berry Hill Rd-Restaurant * Not on State System

Day of Week: Monday Weather: Clear Office: Short Counts JMS

Type of Control: Stop Sign Speed Limit (major st) 35

Direction of Minor Street: E-W Intersection ADT - 4820 (Calc)

Number of Lanes (major st)* 1 Number of Lanes (minor st)* 1

* Each Direction

INTERSECTION VOLUME SUMMARY

	From N Woodland Hills Rd				From S Woodland Hills Rd				From E Berry Hill Rd-Rest				From W Berry Hill Rd-Rest				Total	Total
	LT	STR	RT	TOT	LT	STR	RT	TOT	LT	STR	RT	TOT	LT	STR	RT	TOT	Vol	Peds
7:00 - 7:15	6	10	0	16	0	7	0	7	1	0	15	16	0	0	0	0	39	0
7:15 - 7:30	28	16	0	44	0	17	2	19	4	0	14	18	1	0	1	2	83	0
7:30 - 7:45	22	13	0	35	1	9	3	13	2	0	7	9	0	0	0	0	57	0
7:45 - 8:00	33	4	0	37	1	3	4	8	0	2	4	6	0	2	3	5	56	0
8:00 - 8:15	9	1	0	10	0	1	0	1	0	1	2	3	0	1	2	3	17	0
8:15 - 8:30	38	4	0	42	2	19	0	21	6	0	12	18	0	2	1	3	84	0
8:30 - 8:45	24	6	0	30	0	4	3	7	4	3	9	16	0	8	1	9	62	0
8:45 - 9:00	27	3	1	31	0	5	1	6	0	1	16	17	0	14	1	15	69	0
9:00 - 9:15	23	6	0	29	0	7	0	7	0	0	8	8	0	0	0	0	44	0
9:15 - 9:30	18	4	0	22	0	8	0	8	1	1	13	15	0	0	0	0	45	0
9:30 - 9:45	13	7	0	20	0	14	1	15	2	0	14	16	0	1	1	2	53	0
9:45 - 10:00	22	11	2	35	0	14	0	14	1	0	17	18	0	0	0	0	67	0
10:00 - 10:15	11	6	1	18	0	8	1	9	0	4	22	26	2	0	0	2	55	0
10:15 - 10:30	20	4	6	30	0	7	0	7	0	1	20	21	1	1	0	2	60	0
10:30 - 10:45	13	7	0	20	1	10	0	11	0	1	18	19	1	0	0	1	51	0
10:45 - 11:00	15	10	0	25	0	18	0	18	1	0	22	23	2	0	0	2	68	0
11:00 - 11:15	11	17	2	30	1	13	0	14	1	0	22	23	0	0	0	0	67	2
11:15 - 11:30	20	11	1	32	1	9	1	11	1	0	20	21	1	0	0	1	65	0
11:30 - 11:45	9	12	1	22	1	9	2	12	0	0	11	11	1	2	0	3	48	0
11:45 - 12:00	6	11	2	19	1	10	2	13	1	1	23	25	2	3	2	7	64	0
12:00 - 12:15	22	12	0	34	0	8	0	8	2	0	33	35	2	0	2	4	81	0
12:15 - 12:30	7	5	3	15	0	10	3	13	3	1	15	19	3	1	2	6	53	0
12:30 - 12:45	31	7	3	41	3	11	0	14	3	3	18	24	1	1	1	3	82	0
12:45 - 13:00	10	5	2	17	2	8	3	13	1	2	17	20	1	0	3	4	54	2
13:00 - 13:15	6	4	0	10	9	15	10	34	1	1	12	14	0	6	3	9	67	0
13:15 - 13:30	39	13	1	53	1	16	2	19	2	0	34	36	0	1	0	1	109	0
13:30 - 13:45	13	10	1	24	0	4	2	6	1	0	15	16	0	0	0	0	46	5
13:45 - 14:00	26	4	3	33	0	8	3	11	1	0	31	32	1	2	0	3	79	0
14:00 - 14:15	33	11	1	45	0	12	4	16	2	0	24	26	1	1	0	2	89	0
14:15 - 14:30	22	11	1	34	1	3	1	5	3	0	10	13	3	1	0	4	56	0
14:30 - 14:45	7	3	0	10	0	11	9	20	1	0	9	10	0	1	1	2	42	0
14:45 - 15:00	21	14	1	36	0	16	4	20	3	0	18	21	0	0	0	0	77	0
15:00 - 15:15	34	8	2	44	0	14	2	16	0	0	32	32	2	0	1	3	95	0
15:15 - 15:30	31	7	1	39	1	10	1	12	1	0	32	33	2	1	2	5	89	0
15:30 - 15:45	20	16	0	36	0	16	1	17	3	0	25	28	2	0	2	4	85	0
15:45 - 16:00	18	15	3	36	2	7	0	9	1	0	25	26	1	1	0	2	73	0
16:00 - 16:15	25	17	0	42	0	16	1	17	2	0	28	30	2	1	0	3	92	0
16:15 - 16:30	28	13	0	41	1	8	1	10	2	0	38	40	2	0	0	2	93	0
16:30 - 16:45	24	23	1	48	0	12	3	15	2	1	40	43	1	0	0	1	107	0
16:45 - 17:00	29	19	3	51	0	14	1	15	2	0	34	36	1	1	0	2	104	0
17:00 - 17:15	26	18	1	45	0	16	1	17	0	1	72	73	0	1	0	1	136	0
17:15 - 17:30	20	25	1	46	0	20	7	27	3	1	57	61	0	0	1	1	135	0
17:30 - 17:45	21	14	3	38	0	14	4	18	5	1	41	47	1	0	0	1	104	0
17:45 - 18:00	15	10	5	30	0	9	0	9	0	1	19	20	0	1	0	1	60	0
18:00 - 18:15	21	11	3	35	0	13	0	13	0	1	24	25	2	0	2	4	77	0
18:15 - 18:30	27	22	1	50	0	10	1	11	2	1	15	18	2	0	1	3	82	0
18:30 - 18:45	16	14	0	30	0	8	1	9	1	0	13	14	4	1	0	5	58	0
18:45 - 19:00	12	12	1	25	0	6	2	8	1	1	10	12	2	1	0	3	48	0
TOTAL	972	506	57	1535	29	507	87	623	73	30	1030	1133	47	56	33	136	3427	9
Trucks	4	7	0	11	0	3	1	4	0	0	2	2	0	1	1	2	19	0.6%
School Buses	7	0	0	7	0	3	0	3	0	0	5	5	0	0	0	0	15	0.4%

TOTAL AND PEAK HOUR VOLUME DIAGRAMS

Woodland Hills Rd AT Berry Hill Rd-Restaurant Date: 11/28/2016

12.0 HOUR TOTAL VOLUME
FROM 7:00 TO 15:00

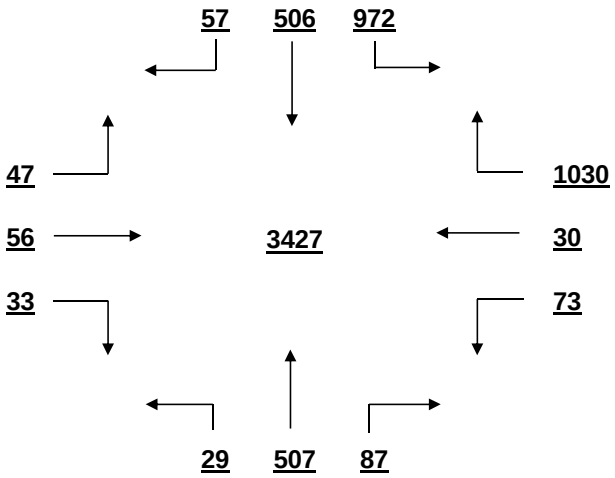

OVERALL PEAK HOUR VOLUME
FROM 16:30 TO 17:30

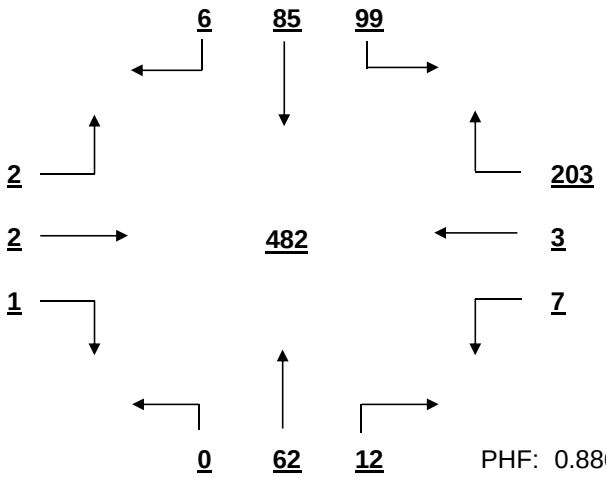

PHF: 0.886

AM PEAK HOUR VOLUME (0:00-10:45)
FROM 8:15 TO 9:15

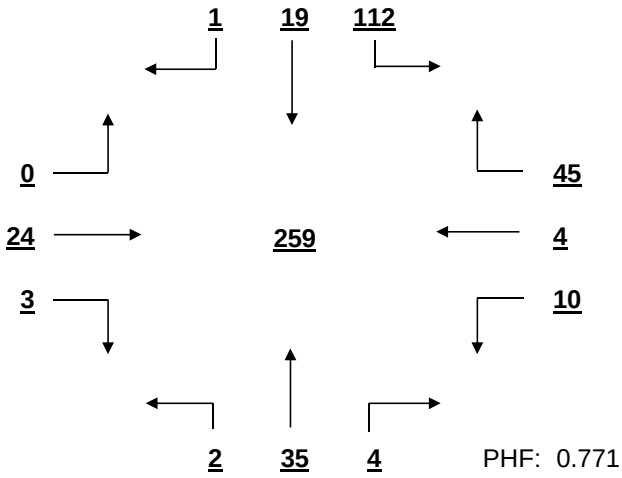

PHF: 0.771

PM PEAK HOUR VOLUME (14:15-23:45)
FROM 16:30 TO 17:30

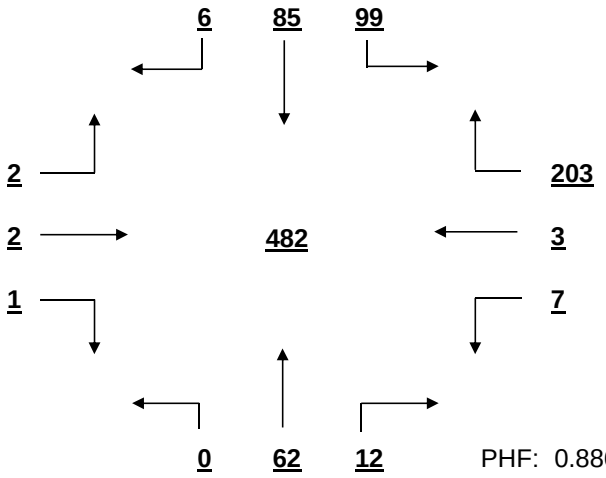

PHF: 0.886

MID-DAY PEAK HOUR VOLUME (11:00-14:00)
FROM 12:30 TO 13:30

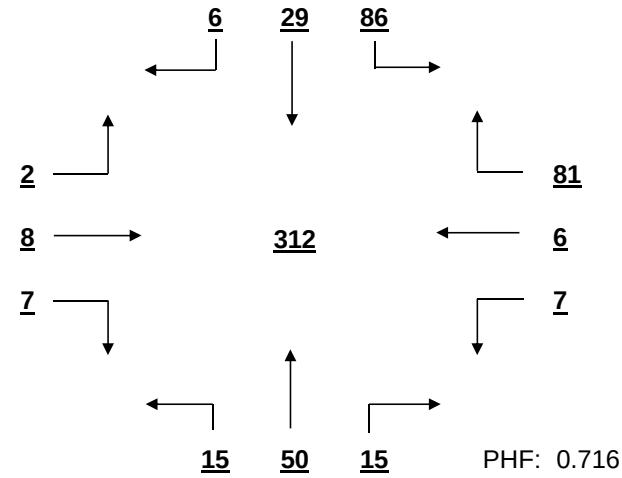

PHF: 0.716

OTHER HOUR VOLUME
FROM 7:00 TO 8:00

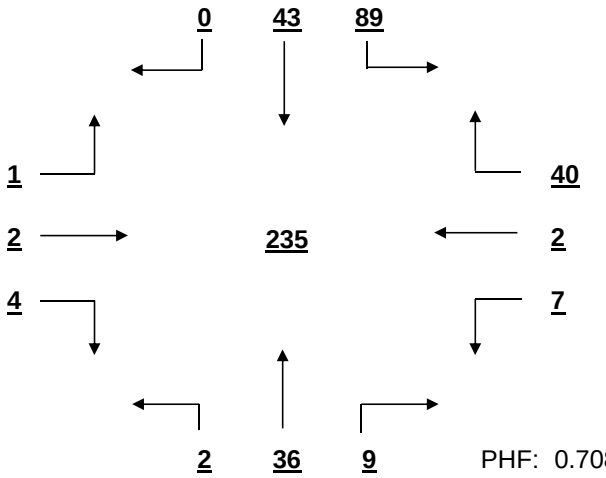

PHF: 0.708

SIGNAL WARRANT ANALYSIS

Woodland Hills Rd AT Berry Hill Rd-Restaurant Date: 11/28/2016

Minor Street Volume, percent of total = 37.0%
Percent of Left Turns from Minor Street = 9.5%
Percent of Right Turns from Minor Street = 83.8%
Percent of Minor Street Right Turns to Remove from Warrant Analysis = 0%
WARRANT BASIS = **100%**

Warrant No. 1 - Vehicular Volume is not met

Condition A - Minimum Vehicular Volume is not met

Average Major Street % of Warrant				Average Minor Street % of Warrant			
179.8	/ 500	=	36%	94.4	/ 150	=	63%

Hourly percent of warrant

	7:00 - 8:00	8:00 - 9:00	9:00 - 10:00	10:00 - 11:00	11:00 - 12:00	12:00 - 13:00	13:00 - 14:00	14:00 - 15:00	15:00 - 16:00	16:00 - 17:00	17:00 - 18:00	18:00 - 19:00
Major St.	36%	30%	30%	28%	31%	31%	38%	37%	42%	48%	46%	36%
Minor St.	33%	36%	38%	59%	53%	65%	65%	47%	79%	99%	134%	46%

Condition B - Interruption to Continuous Traffic is not met

Average Major Street % of Warrant				Average Minor Street % of Warrant			
179.8	/ 750	=	24%	94.4	/ 75	=	126%

Hourly percent of warrant

	7:00 - 8:00	8:00 - 9:00	9:00 - 10:00	10:00 - 11:00	11:00 - 12:00	12:00 - 13:00	13:00 - 14:00	14:00 - 15:00	15:00 - 16:00	16:00 - 17:00	17:00 - 18:00	18:00 - 19:00
Major St.	24%	20%	20%	18%	20%	21%	25%	25%	28%	32%	31%	24%
Minor St.	65%	72%	76%	119%	107%	131%	131%	93%	159%	199%	268%	92%

80% Combination of Conditions A & B is not met

Warrant No. 2 - Four Hour Vehicular Volume is not met

Hourly percent of warrant

	7:00 - 8:00	8:00 - 9:00	9:00 - 10:00	10:00 - 11:00	11:00 - 12:00	12:00 - 13:00	13:00 - 14:00	14:00 - 15:00	15:00 - 16:00	16:00 - 17:00	17:00 - 18:00	18:00 - 19:00
Minor St.	11%	12%	13%	20%	18%	22%	23%	17%	29%	38%	51%	16%

Warrant No. 3 - Peak Hour is not met

Percent of warrant			Percent of warrant		
Overall Peak Hour:	16:30 - 17:30		Higher Volume Side Street Peak Hour:	16:45 - 17:45	
Minor St.	37%		Minor St.	38%	

Warrant No. 4 - Pedestrian Volume. Pedestrian volume shown are minumum volumes assuming heavy major street traffic. If these volumes are met, warrant 4 requires further engineering analysis

Minimum 4 hour ped. volume crossing major street	Minimum peak hour ped. volume crossing major street
107	133

Number of pedestrians crossing major street

	7:00 - 8:00	8:00 - 9:00	9:00 - 10:00	10:00 - 11:00	11:00 - 12:00	12:00 - 13:00	13:00 - 14:00	14:00 - 15:00	15:00 - 16:00	16:00 - 17:00	17:00 - 18:00	18:00 - 19:00
Major St.	0	0	0	0	2	0	0	0	0	0	0	0

Warrant No. 7 - Crash Experience (Requires 3 criteria analysis by engineering)

Total Number: 0 From: 1/1/2005 to 1/1/2008
Accident Rate: 0.00 per million entering vehicles

Types of Accidents	No.	/	Avg.		No.	/	Avg.
Right Angle	0	/	0.0	Rear End	0	/	0.0
Lost Control	0	/	0.0	Side Swipe	0	/	0.0
Left Turn	0	/	0.0	Other	0	/	0.0

SOUTH CAROLINA DEPARTMENT OF TRANSPORTATION
DISTRICT 1
TRAFFIC ENGINEERING

County: Richland City: Columbia Date: 11/28/2016

Major Rt: St. Andrews Rd * Not on State System Minor Rt: Kay St-Chartwell Rd * Not on State System

Day of Week: Monday Weather: Clear Office: Short Counts JMS

Type of Control: Signal Speed Limit (major st) 40

Direction of Minor Street: N-S Intersection ADT - 18950 (Calc)

Number of Lanes (major st)* 2 Number of Lanes (minor st)* 1 * Each Direction

INTERSECTION VOLUME SUMMARY

	From N Kay St-Chartwell R				From S Kay St-Chartwell R				From E St. Andrews Rd				From W St. Andrews Rd				Total	Total
	LT	STR	RT	TOT	LT	STR	RT	TOT	LT	STR	RT	TOT	LT	STR	RT	TOT	Vol	Peds
7:00 - 7:15	5	0	37	42	3	0	2	5	2	96	1	99	22	86	1	109	255	0
7:15 - 7:30	8	0	45	53	6	1	1	8	2	110	2	114	20	107	1	128	303	1
7:30 - 7:45	10	0	60	70	3	0	1	4	0	162	5	167	28	97	2	127	368	0
7:45 - 8:00	10	1	64	75	3	1	2	6	1	181	4	186	18	118	1	137	404	1
8:00 - 8:15	5	0	60	65	2	0	1	3	2	136	6	144	21	121	3	145	357	0
8:15 - 8:30	6	0	0	6	4	0	2	6	0	130	6	136	22	122	1	145	293	0
8:30 - 8:45	4	0	29	33	1	0	1	2	0	119	1	120	23	116	2	141	296	0
8:45 - 9:00	5	0	16	21	3	0	0	3	0	112	3	115	23	118	2	143	282	0
9:00 - 9:15	7	0	20	27	3	0	1	4	0	110	3	113	14	100	1	115	259	0
9:15 - 9:30	8	0	19	27	1	0	0	1	1	96	7	104	14	89	0	103	235	1
9:30 - 9:45	9	0	28	37	0	0	1	1	1	95	2	98	10	94	0	104	240	1
9:45 - 10:00	3	0	25	28	1	0	2	3	2	117	4	123	11	94	1	106	260	0
10:00 - 10:15	1	0	20	21	1	0	0	1	0	88	11	99	15	98	0	113	234	0
10:15 - 10:30	6	0	19	25	2	0	0	2	0	109	4	113	17	104	1	122	262	0
10:30 - 10:45	10	0	20	30	3	0	0	3	1	97	7	105	25	101	4	130	268	0
10:45 - 11:00	5	0	20	25	0	0	0	0	0	99	10	109	17	106	1	124	258	0
11:00 - 11:15	7	0	25	32	0	1	0	1	0	109	10	119	17	103	3	123	275	2
11:15 - 11:30	9	1	16	26	2	0	1	3	1	108	15	124	21	113	3	137	290	1
11:30 - 11:45	13	1	14	28	3	1	0	4	1	116	6	123	21	107	1	129	284	0
11:45 - 12:00	11	0	25	36	3	0	1	4	0	116	14	130	19	126	4	149	319	2
12:00 - 12:15	16	1	34	51	1	0	0	1	1	115	16	132	26	128	3	157	341	0
12:15 - 12:30	13	1	29	43	4	0	1	5	1	148	12	161	25	156	3	184	393	0
12:30 - 12:45	13	0	26	39	3	0	0	3	1	138	9	148	19	129	2	150	340	2
12:45 - 13:00	11	0	25	36	2	1	1	4	1	136	15	152	34	151	1	186	378	0
13:00 - 13:15	12	0	22	34	7	0	1	8	4	138	15	157	32	176	2	210	409	0
13:15 - 13:30	8	0	23	31	6	0	0	6	2	134	15	151	23	133	1	157	345	0
13:30 - 13:45	14	1	25	40	8	2	2	12	2	142	10	154	25	140	2	167	373	1
13:45 - 14:00	11	0	16	27	3	0	1	4	1	126	7	134	28	146	3	177	342	0
14:00 - 14:15	17	0	29	46	7	1	2	10	0	136	13	149	33	129	1	163	368	2
14:15 - 14:30	13	3	27	43	0	1	0	1	2	167	9	178	24	146	1	171	393	1
14:30 - 14:45	8	0	32	40	2	0	0	2	2	170	9	181	23	140	3	166	389	1
14:45 - 15:00	9	1	29	39	3	1	3	7	3	129	10	142	29	123	3	155	343	2
15:00 - 15:15	15	0	34	49	5	0	1	6	2	145	7	154	26	125	7	158	367	0
15:15 - 15:30	12	0	34	46	3	1	1	5	1	129	7	137	29	130	4	163	351	3
15:30 - 15:45	10	0	33	43	3	0	2	5	0	154	10	164	30	138	9	177	389	3
15:45 - 16:00	9	0	35	44	2	1	1	4	1	168	11	180	23	164	4	191	419	0
16:00 - 16:15	6	3	35	44	3	0	2	5	1	187	15	203	32	155	2	189	441	1
16:15 - 16:30	9	1	46	56	1	0	1	2	2	161	10	173	38	163	3	204	435	0
16:30 - 16:45	11	0	53	64	1	0	3	4	3	206	19	228	39	136	5	180	476	2
16:45 - 17:00	10	1	48	59	2	1	2	5	0	167	11	178	53	144	4	201	443	0
17:00 - 17:15	12	1	63	76	4	1	1	6	2	183	17	202	32	151	8	191	475	0
17:15 - 17:30	12	0	58	70	4	0	2	6	4	159	15	178	59	182	6	247	501	1
17:30 - 17:45	10	0	33	43	6	0	1	7	3	181	22	206	49	146	4	199	455	0
17:45 - 18:00	13	1	31	45	5	0	0	5	3	149	13	165	43	173	7	223	438	0
18:00 - 18:15	10	1	20	31	2	0	1	3	3	169	13	185	40	166	7	213	432	2
18:15 - 18:30	14	0	37	51	1	0	2	3	1	139	22	162	43	179	4	226	442	0
18:30 - 18:45	16	0	32	48	3	1	1	5	0	124	21	145	31	144	4	179	377	1
18:45 - 19:00	8	1	24	33	6	1	0	7	1	108	4	113	33	116	1	150	303	1
TOTAL	464	19	1495	1978	141	16	48	205	61	6514	478	7053	1299	6229	136	7664	16900	32
Trucks	5	0	8	13	1	1	2	4	1	110	8	119	15	99	2	116	252	1.5%
School Buses	4	0	8	12	0	0	4	4	2	20	3	25	2	22	3	27	68	0.4%

TOTAL AND PEAK HOUR VOLUME DIAGRAMS

St. Andrews Rd AT Kay St-Chartwell Rd Date: 11/28/2016

12.0 HOUR TOTAL VOLUME
FROM 7:00 TO 15:00

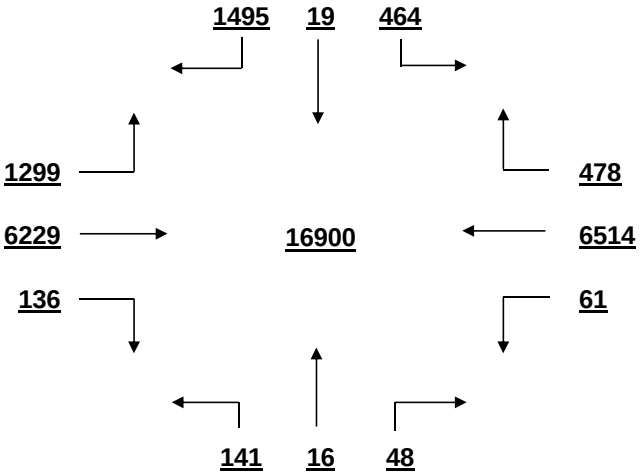

OVERALL PEAK HOUR VOLUME
FROM 16:30 TO 17:30

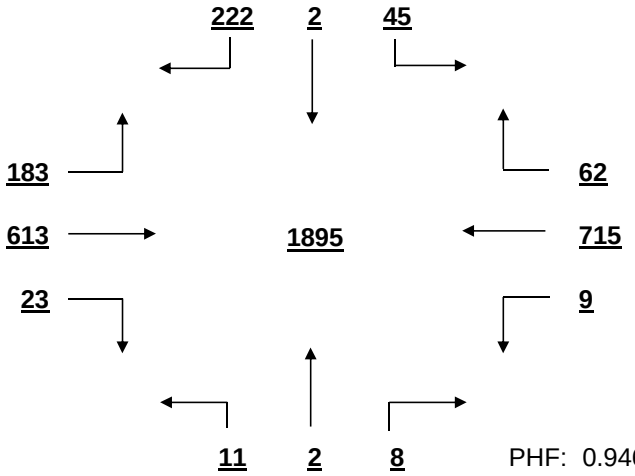

PHF: 0.946

AM PEAK HOUR VOLUME (0:00-10:45)
FROM 7:15 TO 8:15

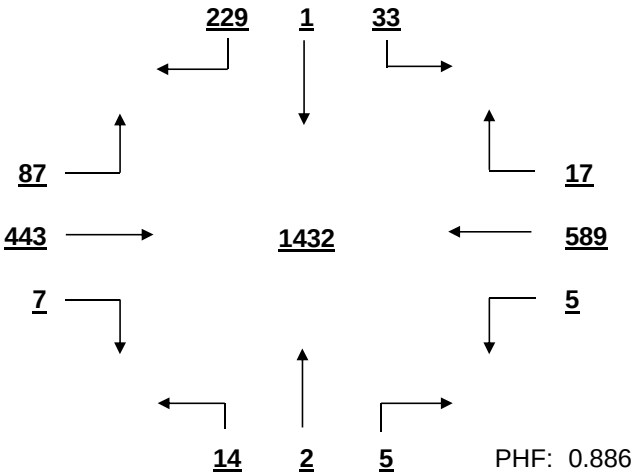

PHF: 0.886

PM PEAK HOUR VOLUME (14:15-23:45)
FROM 16:30 TO 17:30

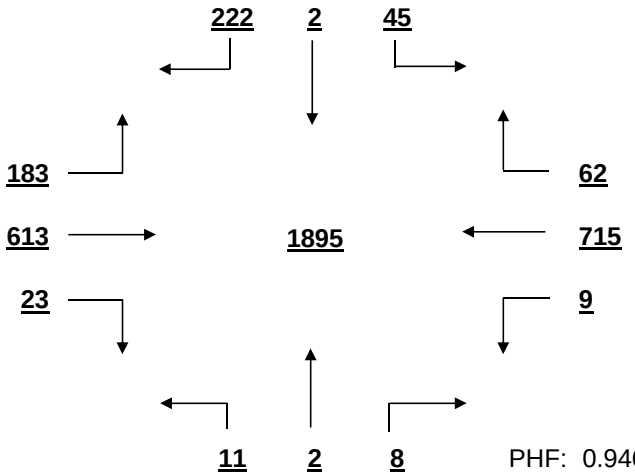

PHF: 0.946

MID-DAY PEAK HOUR VOLUME (11:00-14:00)
FROM 12:15 TO 13:15

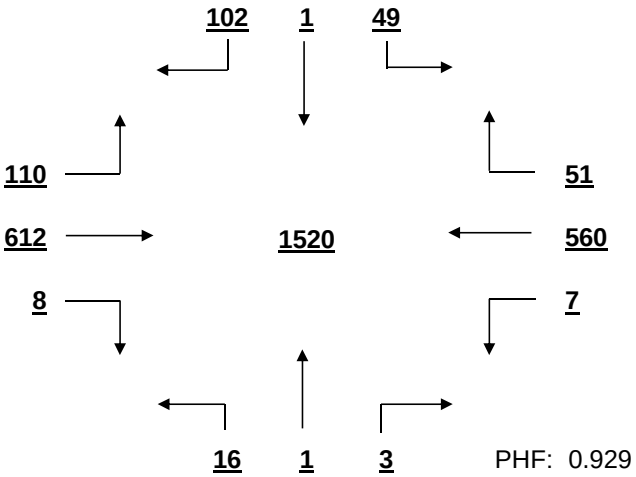

PHF: 0.929

OTHER HOUR VOLUME
FROM 7:00 TO 8:00

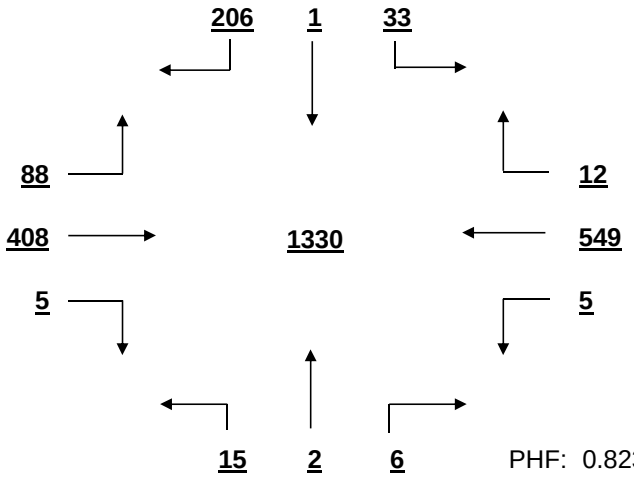

PHF: 0.823

SIGNAL WARRANT ANALYSIS

St. Andrews Rd AT Kay St-Chartwell Rd Date: 11/28/2016

Minor Street Volume, percent of total = 12.9%
Percent of Left Turns from Minor Street = 27.7%
Percent of Right Turns from Minor Street = 70.7%
Percent of Minor Street Right Turns to Remove from Warrant Analysis = 0%
WARRANT BASIS = **100%**

Warrant No. 1 - Vehicular Volume is met

Condition A - Minimum Vehicular Volume is not met

Average Major Street % of Warrant				Average Minor Street % of Warrant			
1226.4	/	600	= 204%	164.8	/	150	= 110%

Hourly percent of warrant

	7:00 - 8:00	8:00 - 9:00	9:00 - 10:00	10:00 - 11:00	11:00 - 12:00	12:00 - 13:00	13:00 - 14:00	14:00 - 15:00	15:00 - 16:00	16:00 - 17:00	17:00 - 18:00	18:00 - 19:00
Major St.	178%	182%	144%	153%	172%	212%	218%	218%	221%	259%	269%	229%
Minor St.	160%	83%	79%	67%	81%	113%	88%	112%	121%	149%	156%	109%

Condition B - Interruption to Continuous Traffic is met

Average Major Street % of Warrant				Average Minor Street % of Warrant			
1226.4	/	900	= 136%	164.8	/	75	= 220%

Hourly percent of warrant

	7:00 - 8:00	8:00 - 9:00	9:00 - 10:00	10:00 - 11:00	11:00 - 12:00	12:00 - 13:00	13:00 - 14:00	14:00 - 15:00	15:00 - 16:00	16:00 - 17:00	17:00 - 18:00	18:00 - 19:00
Major St.	119%	121%	96%	102%	115%	141%	145%	145%	147%	173%	179%	153%
Minor St.	320%	167%	159%	135%	163%	225%	176%	224%	243%	297%	312%	217%

80% Combination of Conditions A & B is met

Warrant No. 2 - Four Hour Vehicular Volume is met

Hourly percent of warrant

	7:00 - 8:00	8:00 - 9:00	9:00 - 10:00	10:00 - 11:00	11:00 - 12:00	12:00 - 13:00	13:00 - 14:00	14:00 - 15:00	15:00 - 16:00	16:00 - 17:00	17:00 - 18:00	18:00 - 19:00
Minor St.	188%	102%	65%	61%	90%	178%	145%	184%	203%	279%	293%	204%

Warrant No. 3 - Peak Hour is met

Percent of warrant			Percent of warrant		
Overall Peak Hour:	16:30 - 17:30		Higher Volume Side Street Peak Hour:	16:30 - 17:30	
Minor St.	226%		Minor St.	226%	

Warrant No. 4 - Pedestrian Volume. Pedestrian volume shown are minumum volumes assuming heavy major street traffic. If these volumes are met, warrant 4 requires further engineering analysis

Minimum 4 hour ped. volume crossing major street: 107

Minimum peak hour ped. volume crossing major street: 133

Number of pedestrians crossing major street

	7:00 - 8:00	8:00 - 9:00	9:00 - 10:00	10:00 - 11:00	11:00 - 12:00	12:00 - 13:00	13:00 - 14:00	14:00 - 15:00	15:00 - 16:00	16:00 - 17:00	17:00 - 18:00	18:00 - 19:00
Major St.	0	0	0	0	0	0	0	2	0	0	0	1

Warrant No. 7 - Crash Experience (Requires 3 criteria analysis by engineering)

Total Number: 0 From: 1/1/2005 to 1/1/2008

Accident Rate: 0.00 per million entering vehicles

Types of Accidents	No.	/	Avg.		No.	/	Avg.
Right Angle	0	/	0.0	Rear End	0	/	0.0
Lost Control	0	/	0.0	Side Swipe	0	/	0.0
Left Turn	0	/	0.0	Other	0	/	0.0

SOUTH CAROLINA DEPARTMENT OF TRANSPORTATION
DISTRICT 1
TRAFFIC ENGINEERING

County: Richland City: Columbia Date: 11/28/2016

Major Rt: Broad River Rd * Not on State System Minor Rt: St. Andrews Rd * Not on State System

Day of Week: Monday Weather: Clear Office: Short Counts JMS

Type of Control: Signal Speed Limit (major st) 40

Direction of Minor Street: E-W Intersection ADT - 36170 (Calc)

Number of Lanes (major st)* 2 Number of Lanes (minor st)* 2

* Each Direction

INTERSECTION VOLUME SUMMARY

	From N Broad River Rd				From S Broad River Rd				From E St. Andrews Rd				From W St. Andrews Rd				Total	Total
	LT	STR	RT	TOT	LT	STR	RT	TOT	LT	STR	RT	TOT	LT	STR	RT	TOT	Vol	Peds
7:00 - 7:15	3	236	48	287	26	174	13	213	13	8	1	22	50	5	36	91	613	0
7:15 - 7:30	1	271	35	307	37	224	9	270	23	8	3	34	67	8	48	123	734	0
7:30 - 7:45	2	303	42	347	57	243	29	329	19	10	3	32	60	6	35	101	809	0
7:45 - 8:00	2	288	51	341	57	248	27	332	24	13	8	45	65	12	45	122	840	2
8:00 - 8:15	6	207	59	272	47	213	22	282	26	9	10	45	65	15	41	121	720	0
8:15 - 8:30	4	221	0	225	49	200	25	274	20	12	4	36	62	9	42	113	648	0
8:30 - 8:45	3	204	46	253	32	193	6	231	23	8	4	35	65	15	41	121	640	1
8:45 - 9:00	1	172	47	220	41	181	9	231	12	5	2	19	35	7	43	85	555	1
9:00 - 9:15	1	154	34	189	40	131	4	175	13	8	0	21	32	7	42	81	466	1
9:15 - 9:30	3	134	40	177	43	143	8	194	3	5	3	11	46	7	35	88	470	3
9:30 - 9:45	2	149	32	183	38	133	4	175	13	7	4	24	30	5	41	76	458	1
9:45 - 10:00	2	171	35	208	53	150	8	211	10	6	5	21	29	6	38	73	513	1
10:00 - 10:15	1	138	32	171	45	143	10	198	11	6	3	20	35	10	47	92	481	3
10:15 - 10:30	0	173	42	215	45	167	5	217	15	11	4	30	33	9	51	93	555	1
10:30 - 10:45	2	120	30	152	54	134	14	202	12	10	5	27	32	10	63	105	486	0
10:45 - 11:00	2	158	41	201	48	173	16	237	18	8	6	32	33	11	54	98	568	1
11:00 - 11:15	1	182	33	216	60	144	10	214	9	9	5	23	38	9	59	106	559	0
11:15 - 11:30	2	148	45	195	50	169	9	228	12	8	5	25	33	8	62	103	551	3
11:30 - 11:45	1	179	43	223	59	151	6	216	8	9	4	21	31	7	55	93	553	0
11:45 - 12:00	0	150	40	190	41	160	5	206	12	9	1	22	43	8	72	123	541	1
12:00 - 12:15	3	222	47	272	68	197	8	273	7	9	4	20	35	7	75	117	682	1
12:15 - 12:30	1	167	42	210	67	187	9	263	7	8	5	20	62	8	77	147	640	0
12:30 - 12:45	0	176	40	216	79	209	12	300	19	9	6	34	41	7	62	110	660	3
12:45 - 13:00	1	198	47	246	58	219	9	286	18	16	5	39	47	16	70	133	704	3
13:00 - 13:15	1	154	41	196	60	199	21	280	14	15	3	32	61	14	82	157	665	3
13:15 - 13:30	4	163	52	219	67	215	15	297	20	14	6	40	57	10	60	127	683	3
13:30 - 13:45	2	154	42	198	61	170	12	243	15	15	6	36	48	9	71	128	605	0
13:45 - 14:00	7	210	35	252	62	214	11	287	25	5	6	36	44	12	55	111	686	2
14:00 - 14:15	9	188	41	238	53	195	26	274	31	19	9	59	38	24	86	148	719	1
14:15 - 14:30	1	193	34	228	91	209	32	332	33	26	6	65	53	12	78	143	768	4
14:30 - 14:45	2	196	57	255	67	232	21	320	28	11	11	50	47	14	62	123	748	4
14:45 - 15:00	2	172	35	209	60	223	14	297	24	16	2	42	38	6	74	118	666	4
15:00 - 15:15	0	203	50	253	59	180	9	248	14	16	4	34	29	8	81	118	653	1
15:15 - 15:30	1	212	49	262	53	225	10	288	15	10	4	29	36	10	58	104	683	2
15:30 - 15:45	1	181	48	230	65	256	17	338	19	17	8	44	54	12	64	130	742	4
15:45 - 16:00	0	197	61	258	56	218	15	289	18	12	2	32	69	8	60	137	716	5
16:00 - 16:15	0	198	66	264	76	252	11	339	19	16	5	40	52	15	72	139	782	5
16:15 - 16:30	2	186	66	254	62	296	9	367	12	16	9	37	53	15	67	135	793	3
16:30 - 16:45	2	196	88	286	78	354	12	444	19	11	2	32	47	9	66	122	884	3
16:45 - 17:00	1	183	39	223	87	364	13	464	14	13	10	37	77	10	60	147	871	3
17:00 - 17:15	1	201	72	274	76	372	10	458	18	13	6	37	71	13	68	152	921	7
17:15 - 17:30	1	220	50	271	87	391	10	488	13	9	6	28	65	10	60	135	922	4
17:30 - 17:45	3	181	62	246	98	374	17	489	18	10	5	33	60	13	62	135	903	3
17:45 - 18:00	5	170	59	234	64	354	17	435	10	14	6	30	63	15	67	145	844	0
18:00 - 18:15	4	156	53	213	90	316	17	423	16	13	3	32	57	6	72	135	803	5
18:15 - 18:30	4	170	42	216	74	259	6	339	21	12	4	37	79	12	73	164	756	2
18:30 - 18:45	4	168	42	214	77	226	9	312	16	7	6	29	46	7	69	122	677	5
18:45 - 19:00	2	155	26	183	59	209	14	282	10	11	3	24	42	5	62	109	598	0
TOTAL	103	8928	2161	11192	2876	10589	625	14090	789	532	232	1553	2355	481	2863	5699	32534	99
Trucks	1	130	52	183	45	145	11	201	6	4	4	14	49	4	40	93	491	1.5%
School Buses	0	44	5	49	21	32	7	60	2	1	4	7	7	0	13	20	136	0.4%

TOTAL AND PEAK HOUR VOLUME DIAGRAMS

Broad River Rd AT St. Andrews Rd Date: 11/28/2016

12.0 HOUR TOTAL VOLUME
FROM 7:00 TO 15:00

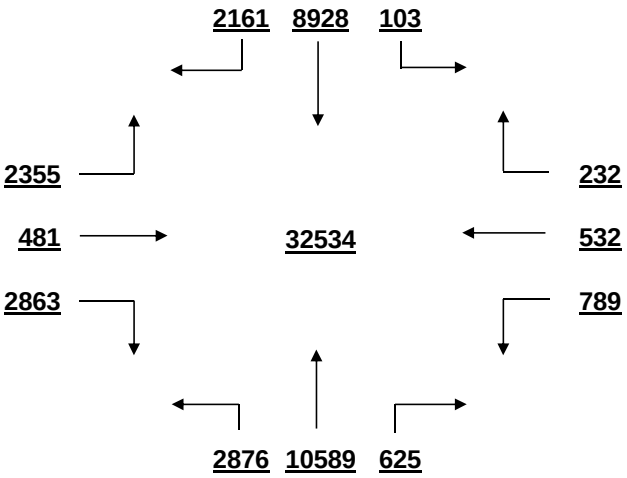

OVERALL PEAK HOUR VOLUME
FROM 16:45 TO 17:45

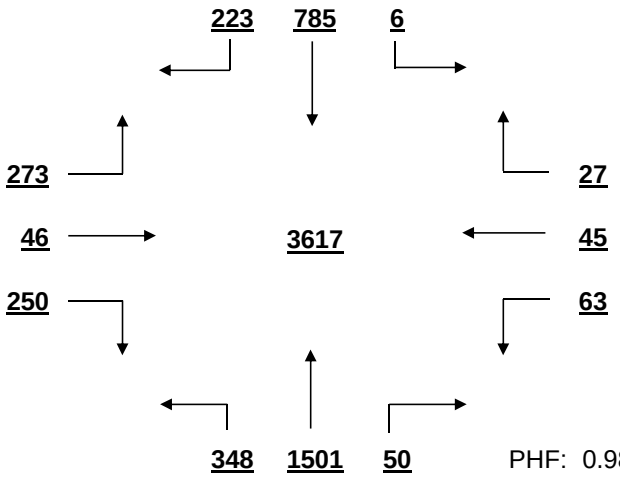

PHF: 0.981

AM PEAK HOUR VOLUME (0:00-10:45)
FROM 7:15 TO 8:15

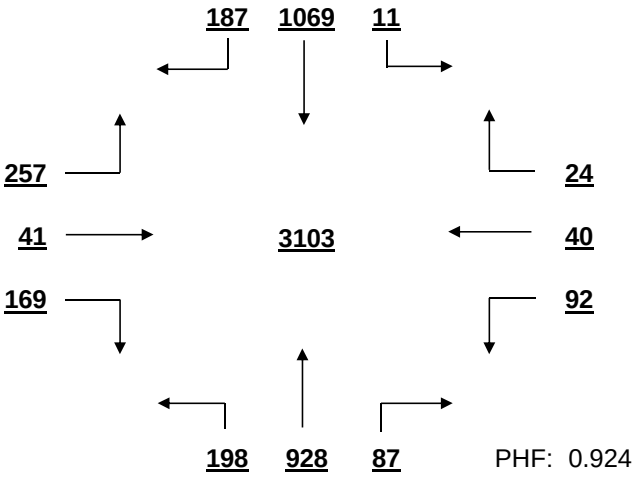

PHF: 0.924

PM PEAK HOUR VOLUME (14:15-23:45)
FROM 16:45 TO 17:45

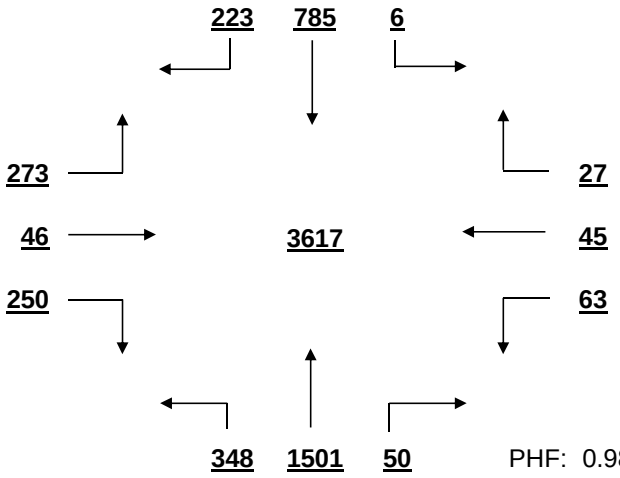

PHF: 0.981

MID-DAY PEAK HOUR VOLUME (11:00-14:00)
FROM 12:30 TO 13:30

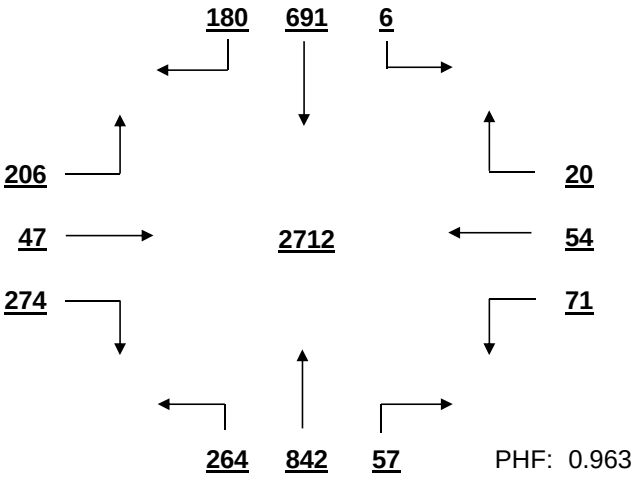

PHF: 0.963

OTHER HOUR VOLUME
FROM 7:00 TO 8:00

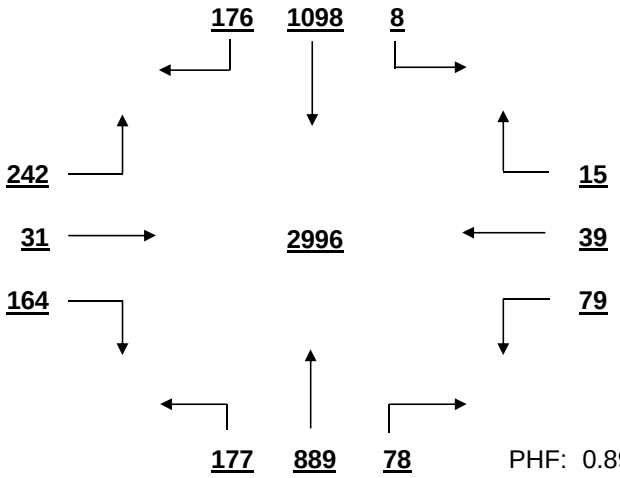

PHF: 0.892

SIGNAL WARRANT ANALYSIS

Broad River Rd AT St. Andrews Rd Date: 11/28/2016

Minor Street Volume, percent of total = 22.3%
Percent of Left Turns from Minor Street = 43.4%
Percent of Right Turns from Minor Street = 42.7%
Percent of Minor Street Right Turns to Remove from Warrant Analysis = 0%
WARRANT BASIS = **100%**

Warrant No. 1 - Vehicular Volume is met

Condition A - Minimum Vehicular Volume is met

Average Major Street % of Warrant				Average Minor Street % of Warrant			
2106.8	/ 600	=	351%	474.9	/ 200	=	237%

Hourly percent of warrant

	7:00 - 8:00	8:00 - 9:00	9:00 - 10:00	10:00 - 11:00	11:00 - 12:00	12:00 - 13:00	13:00 - 14:00	14:00 - 15:00	15:00 - 16:00	16:00 - 17:00	17:00 - 18:00	18:00 - 19:00
Major St.	404%	331%	252%	266%	281%	344%	329%	359%	361%	440%	483%	364%
Minor St.	219%	220%	159%	194%	213%	254%	262%	266%	245%	272%	284%	265%

Condition B - Interruption to Continuous Traffic is met

Average Major Street % of Warrant				Average Minor Street % of Warrant			
2106.8	/ 900	=	234%	474.9	/ 100	=	475%

Hourly percent of warrant

	7:00 - 8:00	8:00 - 9:00	9:00 - 10:00	10:00 - 11:00	11:00 - 12:00	12:00 - 13:00	13:00 - 14:00	14:00 - 15:00	15:00 - 16:00	16:00 - 17:00	17:00 - 18:00	18:00 - 19:00
Major St.	270%	221%	168%	177%	188%	230%	219%	239%	241%	293%	322%	242%
Minor St.	437%	440%	318%	388%	425%	507%	523%	532%	489%	543%	567%	530%

80% Combination of Conditions A & B is met

Warrant No. 2 - Four Hour Vehicular Volume is met

Hourly percent of warrant

	7:00 - 8:00	8:00 - 9:00	9:00 - 10:00	10:00 - 11:00	11:00 - 12:00	12:00 - 13:00	13:00 - 14:00	14:00 - 15:00	15:00 - 16:00	16:00 - 17:00	17:00 - 18:00	18:00 - 19:00
Minor St.	380%	383%	277%	337%	370%	441%	455%	463%	425%	472%	493%	461%

Warrant No. 3 - Peak Hour is met

	Percent of warrant		Percent of warrant
Overall Peak Hour:	16:45 - 17:45	Higher Volume Side Street Peak Hour:	17:30 - 18:30
Minor St.	379%	Minor St.	386%

Warrant No. 4 - Pedestrian Volume. Pedestrian volume shown are minumum volumes assuming heavy major street traffic. If these volumes are met, warrant 4 requires further engineering analysis

Minimum 4 hour ped. volume crossing major street: 107

Minimum peak hour ped. volume crossing major street: 133

Number of pedestrians crossing major street

	7:00 - 8:00	8:00 - 9:00	9:00 - 10:00	10:00 - 11:00	11:00 - 12:00	12:00 - 13:00	13:00 - 14:00	14:00 - 15:00	15:00 - 16:00	16:00 - 17:00	17:00 - 18:00	18:00 - 19:00
Major St.	0	0	2	1	0	2	4	1	5	5	4	4

Warrant No. 7 - Crash Experience (Requires 3 criteria analysis by engineering)

Total Number: 0 From: 1/1/2005 to 1/1/2008
Accident Rate: 0.00 per million entering vehicles

Types of Accidents	No.	/	Avg.		No.	/	Avg.
Right Angle	0	/	0.0	Rear End	0	/	0.0
Lost Control	0	/	0.0	Side Swipe	0	/	0.0
Left Turn	0	/	0.0	Other	0	/	0.0

SOUTH CAROLINA DEPARTMENT OF TRANSPORTATION
DISTRICT 1
TRAFFIC ENGINEERING

County: Richland City: Columbia Date: 11/22/2016

Major Rt: Browning-Burning Tree * Not on State System Minor Rt: Center Point Rd Clear

Day of Week: Tuesday Weather: Clear Office: Short Counts JMS

Type of Control: Stop Sign Speed Limit (major st) 40

Direction of Minor Street: N-S Intersection ADT - 12490 (Calc)

Number of Lanes (major st)* 1 Number of Lanes (minor st)* 1

* Each Direction

INTERSECTION VOLUME SUMMARY

	From N Center Point Rd				From S Center Point Rd				From E Browning-Burning T				From W Browning-Burning T				Total	Total
	LT	STR	RT	TOT	LT	STR	RT	TOT	LT	STR	RT	TOT	LT	STR	RT	TOT	Vol	Peds
7:00 - 7:15	1	0	0	1	0	0	0	0	0	32	3	35	9	42	0	51	87	1
7:15 - 7:30	0	0	1	1	0	0	0	0	0	47	0	47	27	64	0	91	139	0
7:30 - 7:45	0	0	1	1	0	0	0	0	0	38	7	45	30	108	0	138	184	0
7:45 - 8:00	0	0	2	2	0	0	0	0	0	28	7	35	50	130	0	180	217	0
8:00 - 8:15	0	0	4	4	0	0	0	0	0	38	6	44	37	98	0	135	183	0
8:15 - 8:30	0	0	0	0	0	0	0	0	0	40	4	44	29	93	0	122	166	0
8:30 - 8:45	1	0	2	3	0	0	0	0	0	33	6	39	21	60	0	81	123	0
8:45 - 9:00	1	0	1	2	0	0	0	0	0	29	1	30	19	53	0	72	104	0
9:00 - 9:15	1	0	5	6	0	0	0	0	0	41	1	42	19	56	0	75	123	0
9:15 - 9:30	0	0	2	2	0	0	0	0	0	34	2	36	28	40	0	68	106	0
9:30 - 9:45	2	0	4	6	0	0	0	0	0	34	2	36	14	38	0	52	94	1
9:45 - 10:00	0	0	7	7	0	0	0	0	0	31	2	33	25	31	0	56	96	0
10:00 - 10:15	1	0	4	5	0	0	0	0	0	29	1	30	11	26	0	37	72	0
10:15 - 10:30	1	0	8	9	0	0	0	0	0	26	1	27	12	37	0	49	85	1
10:30 - 10:45	2	0	2	4	0	0	0	0	0	36	2	38	9	29	0	38	80	0
10:45 - 11:00	2	0	6	8	0	0	0	0	0	41	2	43	7	23	0	30	81	0
11:00 - 11:15	3	0	10	13	0	0	0	0	0	41	1	42	0	38	0	38	93	1
11:15 - 11:30	2	0	9	11	0	0	0	0	0	52	2	54	5	32	0	37	102	0
11:30 - 11:45	9	0	20	29	0	0	0	0	0	62	2	64	8	22	0	30	123	0
11:45 - 12:00	2	0	24	26	0	0	0	0	0	51	0	51	9	38	0	47	124	0
12:00 - 12:15	4	0	40	44	0	0	0	0	0	63	3	66	3	34	0	37	147	0
12:15 - 12:30	2	0	23	25	0	0	0	0	0	52	3	55	14	41	0	55	135	0
12:30 - 12:45	2	0	8	10	0	0	0	0	0	65	4	69	18	50	0	68	147	0
12:45 - 13:00	6	0	11	17	0	0	0	0	0	66	5	71	19	69	0	88	176	1
13:00 - 13:15	5	0	11	16	0	0	0	0	0	56	6	62	38	58	0	96	174	0
13:15 - 13:30	0	0	10	10	0	0	0	0	0	52	6	58	20	50	0	70	138	0
13:30 - 13:45	2	0	6	8	0	0	0	0	0	51	4	55	15	51	0	66	129	2
13:45 - 14:00	3	0	5	8	0	0	0	0	0	56	4	60	16	61	0	77	145	2
14:00 - 14:15	4	0	4	8	0	0	0	0	0	50	1	51	4	64	0	68	127	1
14:15 - 14:30	2	0	11	13	0	0	0	0	0	41	3	44	12	60	0	72	129	2
14:30 - 14:45	2	0	7	9	0	0	0	0	0	67	3	70	8	34	0	42	121	0
14:45 - 15:00	0	0	8	8	0	0	0	0	0	69	0	69	8	67	0	75	152	0
15:00 - 15:15	2	0	9	11	0	0	0	0	0	57	0	57	7	57	0	64	132	0
15:15 - 15:30	0	0	12	12	0	0	0	0	0	74	0	74	8	46	0	54	140	1
15:30 - 15:45	1	0	14	15	0	0	0	0	0	65	1	66	3	40	0	43	124	0
15:45 - 16:00	3	0	13	16	0	0	0	0	0	94	2	96	2	56	0	58	170	0
16:00 - 16:15	2	0	18	20	0	0	0	0	0	119	2	121	0	55	0	55	196	0
16:15 - 16:30	0	0	18	18	0	0	0	0	0	158	1	159	2	62	0	64	241	1
16:30 - 16:45	9	0	32	41	0	0	0	0	0	160	2	162	0	82	0	82	285	1
16:45 - 17:00	7	0	33	40	0	0	0	0	0	174	0	174	5	71	0	76	290	0
17:00 - 17:15	8	0	41	49	0	0	0	0	0	195	1	196	3	71	0	74	319	0
17:15 - 17:30	8	0	20	28	0	0	0	0	0	199	0	199	3	71	0	74	301	0
17:30 - 17:45	3	0	24	27	0	0	0	0	0	177	1	178	7	64	0	71	276	0
17:45 - 18:00	1	0	16	17	0	0	0	0	0	206	1	207	4	77	0	81	305	0
18:00 - 18:15	1	0	20	21	0	0	0	0	0	175	0	175	3	106	0	109	305	0
18:15 - 18:30	0	0	7	7	0	0	0	0	0	165	1	166	2	143	0	145	318	0
18:30 - 18:45	1	0	6	7	0	0	0	0	0	164	1	165	2	147	0	149	321	0
18:45 - 19:00	0	0	5	5	0	0	0	0	0	117	1	118	1	110	0	111	234	0
TOTAL	106	0	544	650	0	0	0	0	0	3750	108	3858	596	2955	0	3551	8059	15
Trucks	0	0	2	2	0	0	0	0	0	16	0	16	2	10	0	12	30	0.4%
School Buses	0	0	0	0	0	0	0	0	0	18	0	18	1	14	0	15	33	0.4%

TOTAL AND PEAK HOUR VOLUME DIAGRAMS

Browning-Burning Tree AT Center Point Rd Date: 11/22/2016

12.0 HOUR TOTAL VOLUME
FROM 7:00 TO 15:00

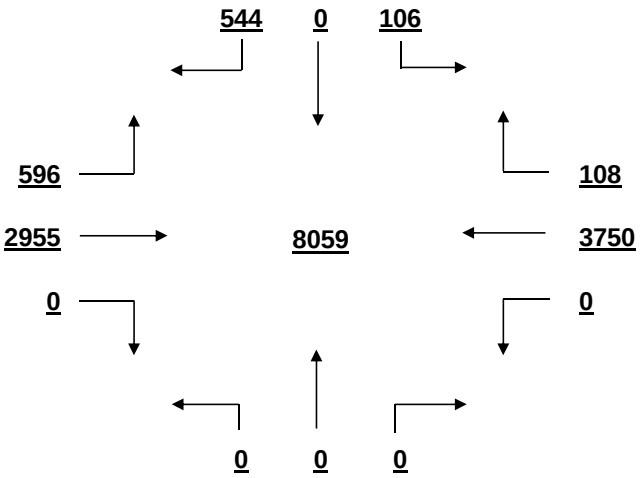

OVERALL PEAK HOUR VOLUME
FROM 17:45 TO 18:45

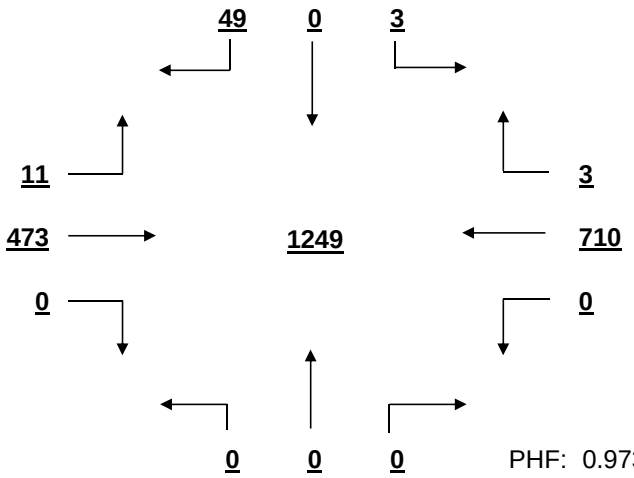

PHF: 0.973

AM PEAK HOUR VOLUME (0:00-10:45)
FROM 7:30 TO 8:30

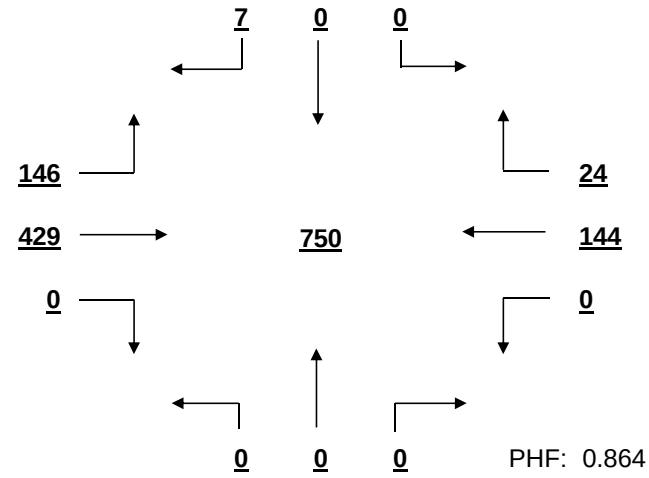

PHF: 0.864

PM PEAK HOUR VOLUME (14:15-23:45)
FROM 17:45 TO 18:45

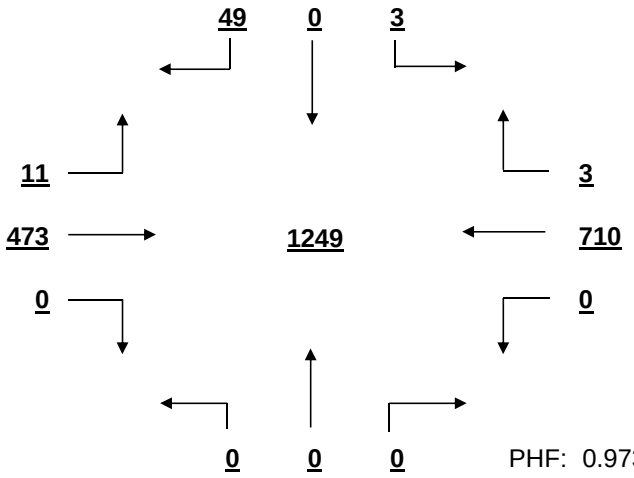

PHF: 0.973

MID-DAY PEAK HOUR VOLUME (11:00-14:00)
FROM 12:30 TO 13:30

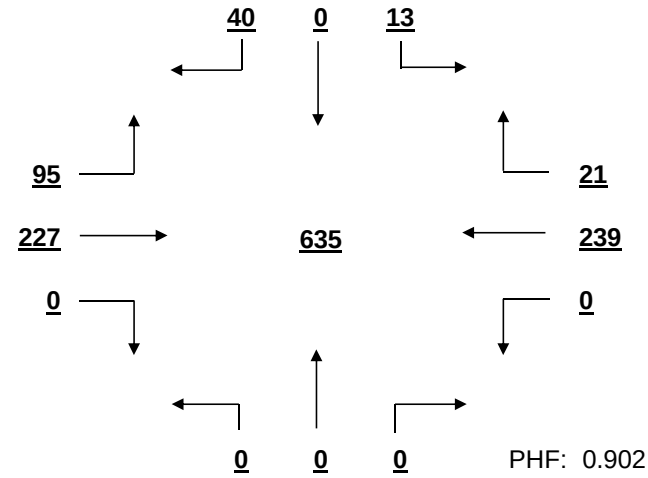

PHF: 0.902

OTHER HOUR VOLUME
FROM 7:00 TO 8:00

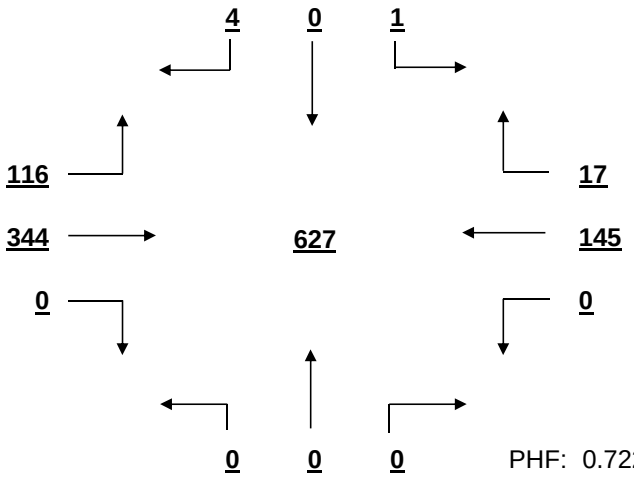

PHF: 0.722

SIGNAL WARRANT ANALYSIS

Browning-Burning Tree AT Center Point Rd Date: 11/22/2016

Minor Street Volume, percent of total = 8.1%
Percent of Left Turns from Minor Street = 16.3%
Percent of Right Turns from Minor Street = 83.7%
Percent of Minor Street Right Turns to Remove from Warrant Analysis = 0%
WARRANT BASIS = **100%**

Warrant No. 1 - Vehicular Volume is not met

Condition A - Minimum Vehicular Volume is not met

Average Major Street % of Warrant				Average Minor Street % of Warrant			
617.4	/ 500	=	123%	54.2	/ 150	=	36%

Hourly percent of warrant

	7:00 - 8:00	8:00 - 9:00	9:00 - 10:00	10:00 - 11:00	11:00 - 12:00	12:00 - 13:00	13:00 - 14:00	14:00 - 15:00	15:00 - 16:00	16:00 - 17:00	17:00 - 18:00	18:00 - 19:00
Major St.	124%	113%	80%	58%	73%	102%	109%	98%	102%	179%	216%	228%
Minor St.	3%	6%	14%	17%	53%	64%	28%	25%	36%	79%	81%	27%

Condition B - Interruption to Continuous Traffic is not met

Average Major Street % of Warrant				Average Minor Street % of Warrant			
617.4	/ 750	=	82%	54.2	/ 75	=	72%

Hourly percent of warrant

	7:00 - 8:00	8:00 - 9:00	9:00 - 10:00	10:00 - 11:00	11:00 - 12:00	12:00 - 13:00	13:00 - 14:00	14:00 - 15:00	15:00 - 16:00	16:00 - 17:00	17:00 - 18:00	18:00 - 19:00
Major St.	83%	76%	53%	39%	48%	68%	73%	65%	68%	119%	144%	152%
Minor St.	7%	12%	28%	35%	105%	128%	56%	51%	72%	159%	161%	53%

80% Combination of Conditions A & B is not met

Warrant No. 2 - Four Hour Vehicular Volume is not met

Hourly percent of warrant

	7:00 - 8:00	8:00 - 9:00	9:00 - 10:00	10:00 - 11:00	11:00 - 12:00	12:00 - 13:00	13:00 - 14:00	14:00 - 15:00	15:00 - 16:00	16:00 - 17:00	17:00 - 18:00	18:00 - 19:00
Minor St.	2%	4%	7%	7%	24%	37%	17%	14%	21%	97%	144%	53%

Warrant No. 3 - Peak Hour is not met

Percent of warrant			Percent of warrant	
Overall Peak Hour:	17:45 - 18:45	Higher Volume Side Street Peak Hour:	16:30 - 17:30	
Minor St.	35%	Minor St.	82%	

Warrant No. 4 - Pedestrian Volume. Pedestrian volume shown are minumum volumes assuming heavy major street traffic. If these volumes are met, warrant 4 requires further engineering analysis

Minimum 4 hour ped. volume crossing major street	Minimum peak hour ped. volume crossing major street
107	133

Number of pedestrians crossing major street

	7:00 - 8:00	8:00 - 9:00	9:00 - 10:00	10:00 - 11:00	11:00 - 12:00	12:00 - 13:00	13:00 - 14:00	14:00 - 15:00	15:00 - 16:00	16:00 - 17:00	17:00 - 18:00	18:00 - 19:00
Major St.	0	0	1	1	1	0	2	3	1	1	0	0

Warrant No. 7 - Crash Experience (Requires 3 criteria analysis by engineering)

Total Number: 0 From: 1/1/2005 to 1/1/2008
Accident Rate: 0.00 per million entering vehicles

Types of Accidents	No.	/	Avg.		No.	/	Avg.
Right Angle	0	/	0.0	Rear End	0	/	0.0
Lost Control	0	/	0.0	Side Swipe	0	/	0.0
Left Turn	0	/	0.0	Other	0	/	0.0

SOUTH CAROLINA DEPARTMENT OF TRANSPORTATION
DISTRICT 1
TRAFFIC ENGINEERING

County: Richland City: Columbia Date: 11/28/2016

Major Rt: Browning Rd * Not on State System Minor Rt: Zimalcrest Dr Clear

Day of Week: Monday Weather: Clear Office: Short Counts JMS

Type of Control: Stop Sign Speed Limit (major st) 40

Direction of Minor Street: N-S Intersection ADT - 12220 (Calc)

Number of Lanes (major st)* 1 Number of Lanes (minor st)* 1

* Each Direction

INTERSECTION VOLUME SUMMARY

	From N Zimalcrest Dr				From S Zimalcrest Dr				From E Browning Rd				From W Browning Rd				Total	Total
	LT	STR	RT	TOT	LT	STR	RT	TOT	LT	STR	RT	TOT	LT	STR	RT	TOT	Vol	Peds
7:00 - 7:15	22	0	31	53	0	0	0	0	0	8	26	34	15	29	0	44	131	1
7:15 - 7:30	36	0	31	67	0	0	0	0	0	16	23	39	18	43	0	61	167	0
7:30 - 7:45	40	0	23	63	0	0	0	0	0	25	21	46	16	74	0	90	199	0
7:45 - 8:00	48	0	18	66	0	0	0	0	0	23	23	46	27	113	0	140	252	0
8:00 - 8:15	26	0	17	43	0	0	0	0	0	21	14	35	8	73	0	81	159	0
8:15 - 8:30	29	0	0	29	0	0	0	0	0	28	18	46	10	64	0	74	149	0
8:30 - 8:45	27	0	10	37	0	0	0	0	0	22	16	38	9	47	0	56	131	0
8:45 - 9:00	21	0	12	33	0	0	0	0	0	22	17	39	17	46	0	63	135	0
9:00 - 9:15	19	0	11	30	0	0	0	0	0	14	8	22	13	36	0	49	101	0
9:15 - 9:30	17	0	10	27	0	0	0	0	0	21	22	43	13	25	0	38	108	0
9:30 - 9:45	15	0	12	27	0	0	0	0	0	22	10	32	5	28	0	33	92	1
9:45 - 10:00	12	0	11	23	0	0	0	0	0	12	11	23	10	21	0	31	77	0
10:00 - 10:15	10	0	9	19	0	0	0	0	0	13	10	23	9	16	0	25	67	0
10:15 - 10:30	12	0	11	23	0	0	0	0	0	17	12	29	5	13	0	18	70	1
10:30 - 10:45	14	0	9	23	0	0	0	0	0	14	14	28	11	12	0	23	74	0
10:45 - 11:00	10	0	19	29	0	0	0	0	0	23	17	40	10	11	0	21	90	0
11:00 - 11:15	11	0	9	20	0	0	0	0	0	25	16	41	17	13	0	30	91	0
11:15 - 11:30	23	0	15	38	0	0	0	0	0	26	11	37	11	23	0	34	109	0
11:30 - 11:45	10	0	11	21	0	0	0	0	0	29	22	51	14	25	0	39	111	0
11:45 - 12:00	18	0	15	33	0	0	0	0	0	37	13	50	21	33	0	54	137	0
12:00 - 12:15	9	0	22	31	0	0	0	0	0	58	17	75	14	26	0	40	146	1
12:15 - 12:30	21	0	19	40	0	0	0	0	0	42	12	54	10	33	0	43	137	0
12:30 - 12:45	11	0	13	24	0	0	0	0	0	31	27	58	27	31	0	58	140	0
12:45 - 13:00	27	0	15	42	0	0	0	0	0	36	21	57	20	29	0	49	148	1
13:00 - 13:15	19	0	20	39	0	0	0	0	0	45	23	68	15	41	0	56	163	0
13:15 - 13:30	13	0	24	37	0	0	0	0	0	32	17	49	15	33	0	48	134	0
13:30 - 13:45	26	0	17	43	0	0	0	0	0	30	21	51	17	36	0	53	147	0
13:45 - 14:00	16	0	19	35	0	0	0	0	0	39	24	63	26	29	0	55	153	0
14:00 - 14:15	21	0	19	40	0	0	0	0	0	31	32	63	19	37	0	56	159	0
14:15 - 14:30	17	0	20	37	0	0	0	0	0	42	27	69	14	22	0	36	142	1
14:30 - 14:45	21	0	25	46	0	0	0	0	0	37	22	59	20	26	0	46	151	0
14:45 - 15:00	27	0	29	56	0	0	0	0	0	32	33	65	15	25	0	40	161	0
15:00 - 15:15	25	0	27	52	0	0	0	0	0	25	14	39	18	38	0	56	147	0
15:15 - 15:30	17	0	17	34	0	0	0	0	0	36	21	57	11	31	0	42	133	0
15:30 - 15:45	24	0	30	54	0	0	0	0	0	39	28	67	21	28	0	49	170	0
15:45 - 16:00	15	0	23	38	0	0	0	0	0	34	27	61	22	23	0	45	144	0
16:00 - 16:15	28	0	24	52	0	0	0	0	0	68	26	94	26	32	0	58	204	0
16:15 - 16:30	21	0	25	46	0	0	0	0	0	72	31	103	31	38	0	69	218	0
16:30 - 16:45	29	0	21	50	0	0	0	0	0	95	32	127	22	32	0	54	231	0
16:45 - 17:00	22	0	31	53	0	0	0	0	0	117	45	162	21	41	0	62	277	0
17:00 - 17:15	21	0	24	45	0	0	0	0	0	126	46	172	32	37	0	69	286	0
17:15 - 17:30	28	0	28	56	0	0	0	0	0	153	58	211	21	38	0	59	326	0
17:30 - 17:45	20	0	20	40	0	0	0	0	0	159	38	197	28	31	0	59	296	0
17:45 - 18:00	19	0	29	48	0	0	0	0	0	150	54	204	27	35	0	62	314	0
18:00 - 18:15	18	0	28	46	0	0	0	0	0	94	37	131	26	22	0	48	225	0
18:15 - 18:30	11	0	20	31	0	0	0	0	0	67	32	99	36	15	0	51	181	0
18:30 - 18:45	19	0	23	42	0	0	0	0	0	30	30	60	26	18	0	44	146	0
18:45 - 19:00	10	0	23	33	0	0	0	0	0	27	34	61	18	18	0	36	130	0
TOTAL	975	0	919	1894	0	0	0	0	0	2165	1153	3318	857	1590	0	2447	7659	6
Trucks	6	0	5	11	0	0	0	0	0	6	10	16	3	6	0	9	36	0.5%
School Buses	4	0	8	12	0	0	0	0	0	5	3	8	1	10	0	11	31	0.4%

TOTAL AND PEAK HOUR VOLUME DIAGRAMS

Browning Rd AT Zimalcrest Dr Date: 11/28/2016

12.0 HOUR TOTAL VOLUME
FROM 7:00 TO 15:00

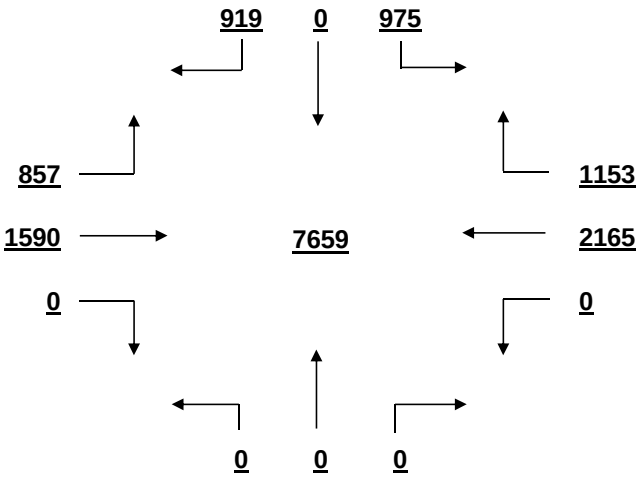

OVERALL PEAK HOUR VOLUME
FROM 17:00 TO 18:00

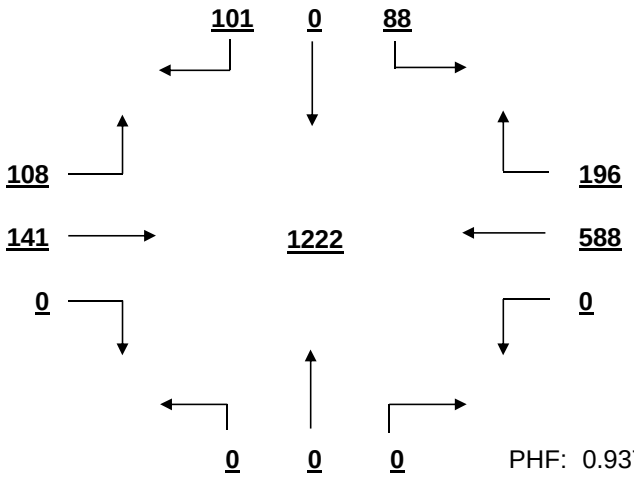

PHF: 0.937

AM PEAK HOUR VOLUME (0:00-10:45)
FROM 7:15 TO 8:15

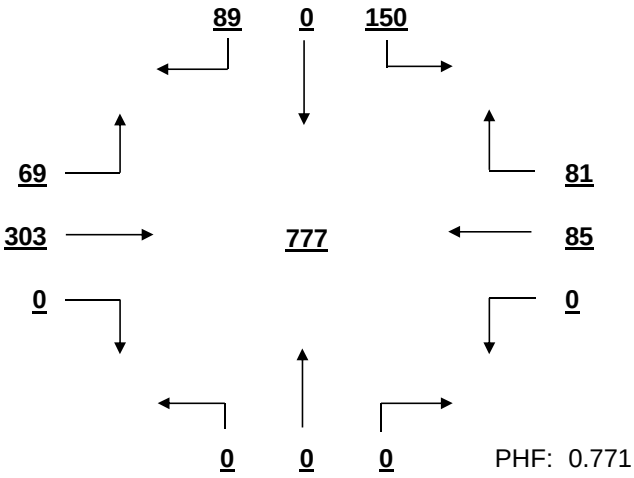

PHF: 0.771

PM PEAK HOUR VOLUME (14:15-23:45)
FROM 17:00 TO 18:00

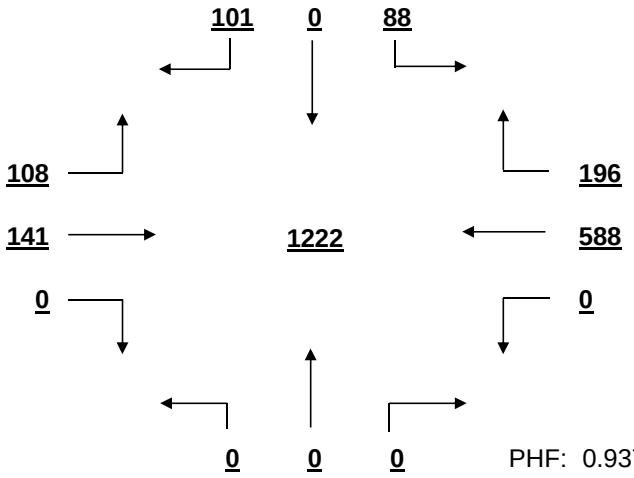

PHF: 0.937

MID-DAY PEAK HOUR VOLUME (11:00-14:00)
FROM 13:00 TO 14:00

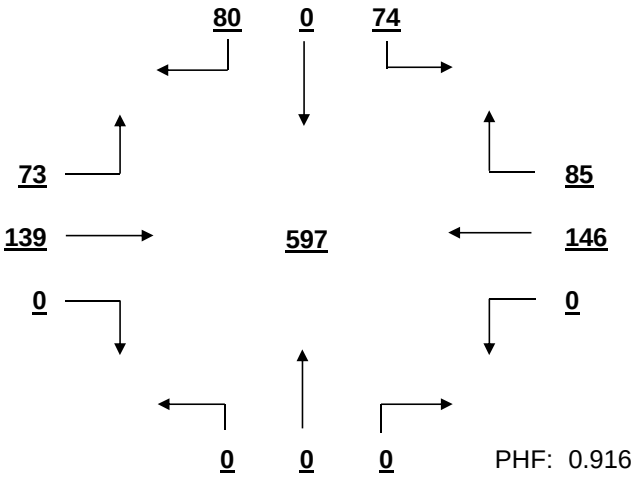

PHF: 0.916

OTHER HOUR VOLUME
FROM 7:00 TO 8:00

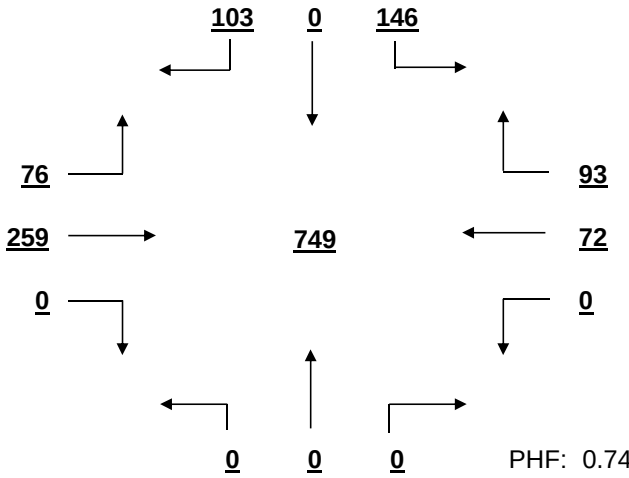

PHF: 0.743

SIGNAL WARRANT ANALYSIS

Browning Rd AT Zimalcrest Dr Date: 11/28/2016

Minor Street Volume, percent of total = 24.7%
Percent of Left Turns from Minor Street = 51.5%
Percent of Right Turns from Minor Street = 48.5%
Percent of Minor Street Right Turns to Remove from Warrant Analysis = 0%
WARRANT BASIS = **100%**

Warrant No. 1 - Vehicular Volume is not met

Condition A - Minimum Vehicular Volume is not met

Average Major Street % of Warrant				Average Minor Street % of Warrant			
480.4	/ 500	=	96%	157.8	/ 150	=	105%

Hourly percent of warrant

	7:00 - 8:00	8:00 - 9:00	9:00 - 10:00	10:00 - 11:00	11:00 - 12:00	12:00 - 13:00	13:00 - 14:00	14:00 - 15:00	15:00 - 16:00	16:00 - 17:00	17:00 - 18:00	18:00 - 19:00
Major St.	100%	86%	54%	41%	67%	87%	89%	87%	83%	146%	207%	106%
Minor St.	166%	95%	71%	63%	75%	91%	103%	119%	119%	134%	126%	101%

Condition B - Interruption to Continuous Traffic is not met

Average Major Street % of Warrant				Average Minor Street % of Warrant			
480.4	/ 750	=	64%	157.8	/ 75	=	210%

Hourly percent of warrant

	7:00 - 8:00	8:00 - 9:00	9:00 - 10:00	10:00 - 11:00	11:00 - 12:00	12:00 - 13:00	13:00 - 14:00	14:00 - 15:00	15:00 - 16:00	16:00 - 17:00	17:00 - 18:00	18:00 - 19:00
Major St.	67%	58%	36%	28%	45%	58%	59%	58%	55%	97%	138%	71%
Minor St.	332%	189%	143%	125%	149%	183%	205%	239%	237%	268%	252%	203%

80% Combination of Conditions A & B is not met

Warrant No. 2 - Four Hour Vehicular Volume is not met

Hourly percent of warrant

	7:00 - 8:00	8:00 - 9:00	9:00 - 10:00	10:00 - 11:00	11:00 - 12:00	12:00 - 13:00	13:00 - 14:00	14:00 - 15:00	15:00 - 16:00	16:00 - 17:00	17:00 - 18:00	18:00 - 19:00
Minor St.	96%	49%	29%	23%	33%	47%	54%	62%	59%	117%	205%	61%

Warrant No. 3 - Peak Hour is not met

Percent of warrant			Percent of warrant	
Overall Peak Hour: 17:00 - 18:00		Higher Volume Side Street Peak Hour:	7:00 - 8:00	
Minor St.	98%	Minor St.	58%	

Warrant No. 4 - Pedestrian Volume. Pedestrian volume shown are minumum volumes assuming heavy major street traffic. If these volumes are met, warrant 4 requires further engineering analysis

Minimum 4 hour ped. volume crossing major street: 107

Minimum peak hour ped. volume crossing major street: 133

Number of pedestrians crossing major street

	7:00 - 8:00	8:00 - 9:00	9:00 - 10:00	10:00 - 11:00	11:00 - 12:00	12:00 - 13:00	13:00 - 14:00	14:00 - 15:00	15:00 - 16:00	16:00 - 17:00	17:00 - 18:00	18:00 - 19:00
Major St.	1	0	1	1	0	2	0	1	0	0	0	0

Warrant No. 7 - Crash Experience (Requires 3 criteria analysis by engineering)

Total Number: 0 From: 1/1/2005 to 1/1/2008
Accident Rate: 0.00 per million entering vehicles

Types of Accidents	No.	/	Avg.		No.	/	Avg.
Right Angle	0	/	0.0	Rear End	0	/	0.0
Lost Control	0	/	0.0	Side Swipe	0	/	0.0
Left Turn	0	/	0.0	Other	0	/	0.0

SOUTH CAROLINA DEPARTMENT OF TRANSPORTATION
DISTRICT 1
TRAFFIC ENGINEERING

County: Richland City: Columbia Date: 11/29/2016

Major Rt: Bush River Rd * Not on State System Minor Rt: Ashland Rd-Marydale Ln Clear

Day of Week: Tuesday Weather: Rain Office: Short Counts JMS

Type of Control: Stop Sign Speed Limit (major st) 40

Direction of Minor Street: N-S Intersection ADT - 14340 (Calc)

Number of Lanes (major st)* 1 Number of Lanes (minor st)* 1

* Each Direction

INTERSECTION VOLUME SUMMARY

	From N Ashland Rd-Marydal				From S Ashland Rd-Marydal				From E Bush River Rd				From W Bush River Rd				Total	Total
	LT	STR	RT	TOT	LT	STR	RT	TOT	LT	STR	RT	TOT	LT	STR	RT	TOT	Vol	Peds
7:00 - 7:15	26	0	2	28	0	0	0	0	0	49	16	65	4	141	0	145	238	0
7:15 - 7:30	24	0	3	27	0	0	0	0	2	38	9	49	9	173	0	182	258	0
7:30 - 7:45	56	0	2	58	1	0	0	1	2	64	12	78	6	189	2	197	334	1
7:45 - 8:00	84	0	7	91	0	0	0	0	2	82	19	103	1	219	1	221	415	0
8:00 - 8:15	42	0	0	42	0	0	1	1	4	55	15	74	1	149	5	155	272	0
8:15 - 8:30	67	3	0	70	2	4	0	6	6	53	16	75	0	177	2	179	330	0
8:30 - 8:45	33	4	1	38	0	1	3	4	2	46	13	61	0	155	5	160	263	0
8:45 - 9:00	35	0	1	36	0	0	1	1	0	58	17	75	3	114	2	119	231	0
9:00 - 9:15	14	1	1	16	0	0	0	0	0	42	18	60	3	86	1	90	166	0
9:15 - 9:30	13	0	1	14	0	0	1	1	1	69	15	85	1	62	1	64	164	0
9:30 - 9:45	16	0	2	18	0	3	0	3	1	55	16	72	6	52	0	58	151	0
9:45 - 10:00	26	2	3	31	0	0	0	0	2	47	11	60	23	32	2	57	148	0
10:00 - 10:15	28	7	4	39	0	4	1	5	2	63	15	80	1	68	3	72	196	0
10:15 - 10:30	20	2	1	23	1	1	1	3	4	46	14	64	1	61	1	63	153	0
10:30 - 10:45	12	1	4	17	2	1	0	3	2	51	10	63	1	62	2	65	148	0
10:45 - 11:00	21	1	2	24	0	1	1	2	1	71	13	85	1	76	3	80	191	0
11:00 - 11:15	10	1	0	11	0	2	0	2	2	76	21	99	2	59	0	61	173	0
11:15 - 11:30	19	0	3	22	3	0	1	4	1	61	14	76	1	50	0	51	153	0
11:30 - 11:45	14	0	1	15	1	2	2	5	2	90	29	121	5	82	0	87	228	0
11:45 - 12:00	17	1	4	22	4	1	0	5	1	57	28	86	2	69	2	73	186	0
12:00 - 12:15	14	2	1	17	1	0	3	4	5	86	22	113	3	73	4	80	214	0
12:15 - 12:30	12	1	2	15	1	2	3	6	2	80	24	106	2	70	2	74	201	0
12:30 - 12:45	17	1	3	21	2	0	0	2	1	88	30	119	1	82	2	85	227	0
12:45 - 13:00	24	0	7	31	0	2	2	4	0	95	25	120	6	100	0	106	261	0
13:00 - 13:15	19	1	2	22	1	1	1	3	3	94	31	128	5	83	1	89	242	0
13:15 - 13:30	22	0	2	24	1	1	1	3	0	74	27	101	9	80	1	90	218	0
13:30 - 13:45	23	1	1	25	0	1	2	3	1	84	19	104	3	71	0	74	206	0
13:45 - 14:00	29	0	5	34	0	0	2	2	2	82	13	97	4	90	1	95	228	0
14:00 - 14:15	16	2	0	18	0	2	2	4	2	62	12	76	4	58	1	63	161	0
14:15 - 14:30	21	1	1	23	0	0	2	2	0	69	9	78	3	64	0	67	170	0
14:30 - 14:45	20	1	0	21	1	3	0	4	1	97	21	119	2	70	1	73	217	0
14:45 - 15:00	26	2	6	34	3	1	1	5	1	99	19	119	2	84	1	87	245	0
15:00 - 15:15	30	0	6	36	1	0	2	3	1	93	23	117	3	82	0	85	241	0
15:15 - 15:30	16	0	0	16	0	1	0	1	3	104	25	132	2	81	0	83	232	0
15:30 - 15:45	10	0	3	13	0	0	0	0	0	68	11	79	0	53	0	53	145	1
15:45 - 16:00	11	1	2	14	0	1	1	2	1	110	15	126	1	59	0	60	202	0
16:00 - 16:15	14	2	7	23	1	1	2	4	0	75	17	92	1	60	1	62	181	0
16:15 - 16:30	21	1	6	28	0	2	1	3	0	181	34	215	5	89	1	95	341	0
16:30 - 16:45	24	0	5	29	1	1	3	5	0	148	19	167	0	79	0	79	280	0
16:45 - 17:00	24	0	7	31	1	0	0	1	3	156	32	191	1	51	0	52	275	0
17:00 - 17:15	23	1	4	28	5	0	2	7	2	205	41	248	1	82	0	83	366	0
17:15 - 17:30	32	0	2	34	3	1	0	4	2	196	44	242	0	87	1	88	368	0
17:30 - 17:45	22	0	2	24	0	0	0	0	1	221	33	255	2	80	1	83	362	0
17:45 - 18:00	15	0	4	19	1	1	0	2	3	207	32	242	2	73	0	75	338	0
18:00 - 18:15	15	3	2	20	0	0	1	1	3	140	36	179	2	52	0	54	254	0
18:15 - 18:30	8	0	8	16	0	0	0	0	2	176	46	224	0	59	0	59	299	0
18:30 - 18:45	16	4	2	22	3	3	3	9	2	157	34	193	1	63	1	65	289	0
18:45 - 19:00	11	4	8	23	0	2	3	5	19	97	28	144	2	47	1	50	222	0
TOTAL	1112	51	140	1303	40	46	49	135	97	4517	1043	5657	138	4098	52	4288	11383	2
Trucks	2	0	1	3	0	0	1	1	0	36	3	39	1	29	0	30	73	0.6%
School Buses	2	0	8	10	0	0	0	0	0	14	1	15	3	6	0	9	34	0.3%

TOTAL AND PEAK HOUR VOLUME DIAGRAMS

Bush River Rd AT Ashland Rd-Marydale Ln Date: 11/29/2016

12.0 HOUR TOTAL VOLUME
FROM 7:00 TO 15:00

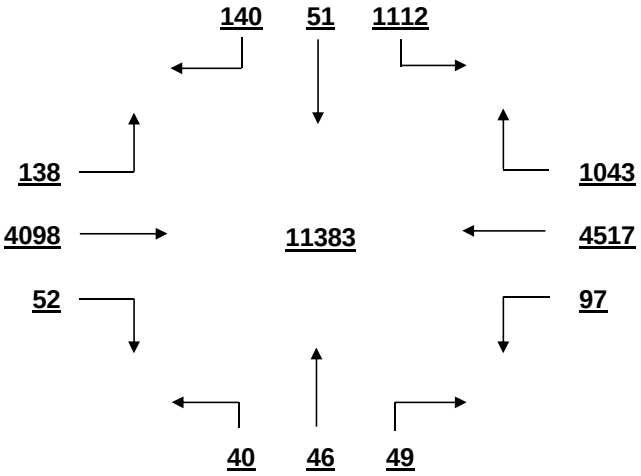

OVERALL PEAK HOUR VOLUME
FROM 17:00 TO 18:00

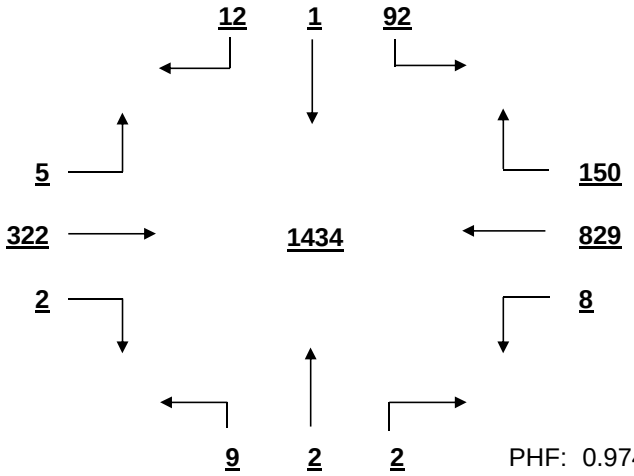

PHF: 0.974

AM PEAK HOUR VOLUME (0:00-10:45)
FROM 7:30 TO 8:30

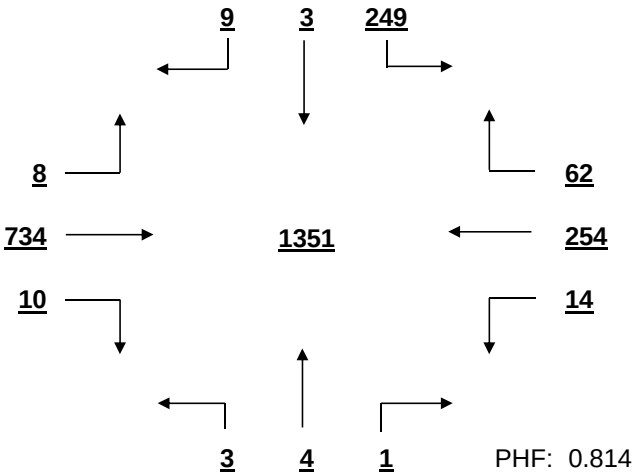

PHF: 0.814

PM PEAK HOUR VOLUME (14:15-23:45)
FROM 17:00 TO 18:00

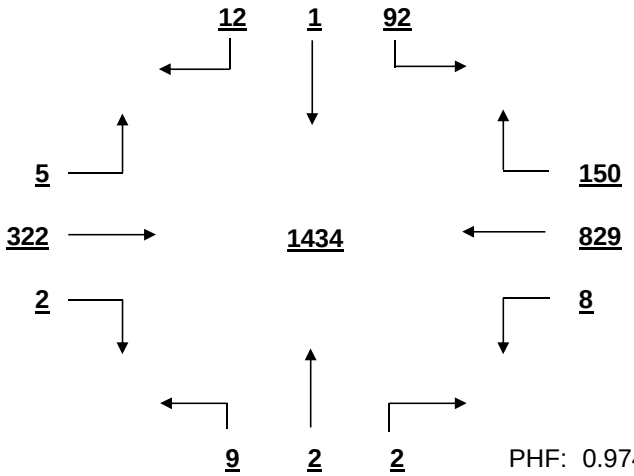

PHF: 0.974

MID-DAY PEAK HOUR VOLUME (11:00-14:00)
FROM 12:30 TO 13:30

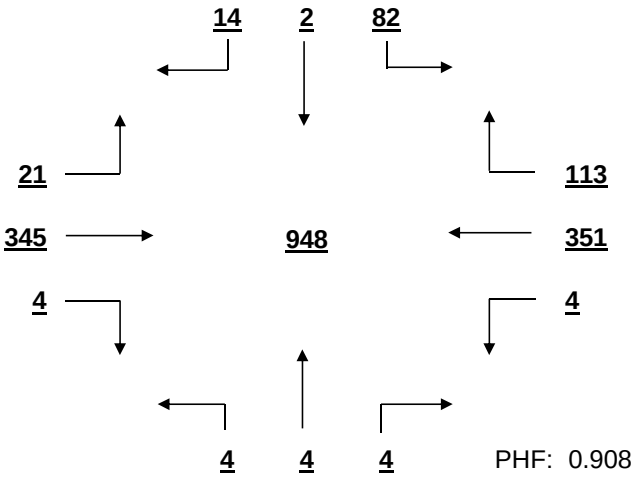

PHF: 0.908

OTHER HOUR VOLUME
FROM 7:00 TO 8:00

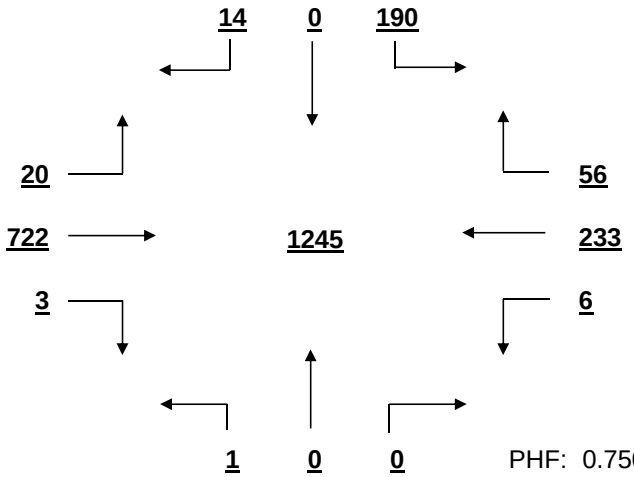

PHF: 0.750

SIGNAL WARRANT ANALYSIS

Bush River Rd AT Ashland Rd-Marydale Ln Date: 11/29/2016

Minor Street Volume, percent of total = 12.6%
Percent of Left Turns from Minor Street = 80.1%
Percent of Right Turns from Minor Street = 13.1%
Percent of Minor Street Right Turns to Remove from Warrant Analysis = 0%
WARRANT BASIS = **100%**

Warrant No. 1 - Vehicular Volume is not met

Condition A - Minimum Vehicular Volume is not met

Average Major Street % of Warrant				Average Minor Street % of Warrant			
828.8	/ 500	=	166%	108.6	/ 150	=	72%

Hourly percent of warrant

	7:00 - 8:00	8:00 - 9:00	9:00 - 10:00	10:00 - 11:00	11:00 - 12:00	12:00 - 13:00	13:00 - 14:00	14:00 - 15:00	15:00 - 16:00	16:00 - 17:00	17:00 - 18:00	18:00 - 19:00
Major St.	208%	180%	109%	114%	131%	161%	156%	136%	147%	191%	263%	194%
Minor St.	136%	124%	53%	69%	47%	56%	70%	64%	53%	74%	70%	54%

Condition B - Interruption to Continuous Traffic is not met

Average Major Street % of Warrant				Average Minor Street % of Warrant			
828.8	/ 750	=	111%	108.6	/ 75	=	145%

Hourly percent of warrant

	7:00 - 8:00	8:00 - 9:00	9:00 - 10:00	10:00 - 11:00	11:00 - 12:00	12:00 - 13:00	13:00 - 14:00	14:00 - 15:00	15:00 - 16:00	16:00 - 17:00	17:00 - 18:00	18:00 - 19:00
Major St.	139%	120%	73%	76%	87%	107%	104%	91%	98%	127%	175%	129%
Minor St.	272%	248%	105%	137%	93%	112%	140%	128%	105%	148%	140%	108%

80% Combination of Conditions A & B is not met

Warrant No. 2 - Four Hour Vehicular Volume is met

Hourly percent of warrant

	7:00 - 8:00	8:00 - 9:00	9:00 - 10:00	10:00 - 11:00	11:00 - 12:00	12:00 - 13:00	13:00 - 14:00	14:00 - 15:00	15:00 - 16:00	16:00 - 17:00	17:00 - 18:00	18:00 - 19:00
Minor St.	224%	152%	33%	45%	35%	57%	67%	51%	47%	102%	131%	77%

Warrant No. 3 - Peak Hour is met

	Percent of warrant		Percent of warrant
Overall Peak Hour:	17:00 - 18:00	Higher Volume Side Street Peak Hour:	7:30 - 8:30
Minor St.	85%	Minor St.	146%

Warrant No. 4 - Pedestrian Volume. Pedestrian volume shown are minumum volumes assuming heavy major street traffic. If these volumes are met, warrant 4 requires further engineering analysis

Minimum 4 hour ped. volume crossing major street: 107

Minimum peak hour ped. volume crossing major street: 133

Number of pedestrians crossing major street

	7:00 - 8:00	8:00 - 9:00	9:00 - 10:00	10:00 - 11:00	11:00 - 12:00	12:00 - 13:00	13:00 - 14:00	14:00 - 15:00	15:00 - 16:00	16:00 - 17:00	17:00 - 18:00	18:00 - 19:00
Major St.	0	0	0	0	0	0	0	0	0	0	0	0

Warrant No. 7 - Crash Experience (Requires 3 criteria analysis by engineering)

Total Number: 0 From: 1/1/2005 to 1/1/2008

Accident Rate: 0.00 per million entering vehicles

Types of Accidents	No.	/	Avg.		No.	/	Avg.
Right Angle	0	/	0.0	Rear End	0	/	0.0
Lost Control	0	/	0.0	Side Swipe	0	/	0.0
Left Turn	0	/	0.0	Other	0	/	0.0

SOUTH CAROLINA DEPARTMENT OF TRANSPORTATION
DISTRICT 1
TRAFFIC ENGINEERING

County: Richland City: Columbia Date: 11/28/2016

Major Rt: Bush River Rd * Not on State System Minor Rt: Outlet Pointe Blvd-Meadow Ct

Day of Week: Monday Weather: Clear Rain Office: Short Counts JMS

Type of Control: Signal Speed Limit (major st) 40

Direction of Minor Street: N-S Intersection ADT - 24460 (Calc)

Number of Lanes (major st)* 2 Number of Lanes (minor st)* 2

* Each Direction

INTERSECTION VOLUME SUMMARY

	From N Outlet Pointe Blvd				From S Outlet Pointe Blvd				From E Bush River Rd				From W Bush River Rd				Total	Total
	LT	STR	RT	TOT	LT	STR	RT	TOT	LT	STR	RT	TOT	LT	STR	RT	TOT	Vol	Peds
7:00 - 7:15	10	1	1	12	1	0	2	3	21	46	6	73	1	141	1	143	231	0
7:15 - 7:30	19	1	1	21	2	0	0	2	55	87	5	147	1	236	8	245	415	0
7:30 - 7:45	21	2	4	27	2	0	5	7	56	87	4	147	1	273	8	282	463	0
7:45 - 8:00	22	0	3	25	1	0	4	5	87	75	10	172	0	287	9	296	498	0
8:00 - 8:15	16	0	3	19	4	1	3	8	100	107	5	212	1	188	12	201	440	1
8:15 - 8:30	11	1	0	12	2	0	17	19	113	117	4	234	0	185	10	195	460	0
8:30 - 8:45	14	1	0	15	4	0	8	12	77	89	6	172	0	171	12	183	382	2
8:45 - 9:00	16	0	1	17	2	0	10	12	62	78	4	144	1	149	5	155	328	1
9:00 - 9:15	7	2	0	9	3	0	18	21	59	76	1	136	0	114	7	121	287	2
9:15 - 9:30	8	1	2	11	4	0	16	20	48	88	1	137	1	90	8	99	267	0
9:30 - 9:45	5	0	1	6	9	2	17	28	30	85	3	118	1	73	10	84	236	0
9:45 - 10:00	8	1	0	9	8	0	20	28	35	91	3	129	0	75	8	83	249	2
10:00 - 10:15	8	0	1	9	6	1	23	30	34	87	5	126	0	70	11	81	246	0
10:15 - 10:30	7	0	1	8	7	0	21	28	33	90	3	126	2	76	6	84	246	0
10:30 - 10:45	6	0	1	7	6	0	26	32	32	96	3	131	1	67	5	73	243	0
10:45 - 11:00	5	0	0	5	6	0	27	33	41	83	7	131	1	76	11	88	257	2
11:00 - 11:15	2	1	1	4	10	0	32	42	40	101	4	145	0	89	6	95	286	0
11:15 - 11:30	8	0	0	8	10	0	30	40	56	88	2	146	0	86	7	93	287	1
11:30 - 11:45	4	0	0	4	8	0	50	58	61	123	4	188	0	85	6	91	341	1
11:45 - 12:00	8	0	2	10	7	2	54	63	66	136	6	208	1	96	11	108	389	0
12:00 - 12:15	6	1	1	8	30	1	88	119	66	132	10	208	1	99	24	124	459	0
12:15 - 12:30	5	1	3	9	15	2	56	73	57	140	9	206	0	106	17	123	411	2
12:30 - 12:45	7	1	1	9	21	5	68	94	82	164	6	252	0	122	17	139	494	2
12:45 - 13:00	5	0	1	6	18	0	53	71	92	150	4	246	0	104	11	115	438	2
13:00 - 13:15	9	1	1	11	28	2	86	116	77	146	8	231	3	123	16	142	500	1
13:15 - 13:30	6	2	2	10	17	1	54	72	82	131	10	223	0	119	22	141	446	1
13:30 - 13:45	7	0	0	7	17	0	51	68	67	116	7	190	0	109	24	133	398	0
13:45 - 14:00	4	1	0	5	12	1	32	45	67	133	10	210	1	106	14	121	381	1
14:00 - 14:15	6	3	2	11	11	1	35	47	73	109	8	190	0	93	8	101	349	0
14:15 - 14:30	7	3	1	11	22	0	39	61	45	124	5	174	0	137	12	149	395	3
14:30 - 14:45	11	0	0	11	5	1	35	41	45	125	4	174	1	116	12	129	355	0
14:45 - 15:00	9	1	2	12	12	3	35	50	48	150	6	204	1	146	14	161	427	1
15:00 - 15:15	7	3	1	11	9	0	28	37	35	118	9	162	0	117	6	123	333	0
15:15 - 15:30	11	0	2	13	12	0	35	47	40	140	9	189	2	110	8	120	369	1
15:30 - 15:45	5	0	0	5	10	1	51	62	44	150	13	207	0	109	8	117	391	0
15:45 - 16:00	8	0	0	8	17	1	36	54	46	140	7	193	2	107	8	117	372	0
16:00 - 16:15	5	1	1	7	25	1	88	114	36	185	16	237	1	105	7	113	471	1
16:15 - 16:30	10	1	0	11	16	6	39	61	41	219	14	274	2	107	14	123	469	0
16:30 - 16:45	4	0	3	7	25	0	86	111	36	198	16	250	2	140	13	155	523	0
16:45 - 17:00	7	2	2	11	20	1	80	101	31	269	6	306	2	118	10	130	548	0
17:00 - 17:15	7	2	5	14	52	1	108	161	34	252	20	306	2	190	8	200	681	2
17:15 - 17:30	10	0	3	13	20	1	79	100	47	298	28	373	1	161	11	173	659	3
17:30 - 17:45	7	2	2	11	21	3	57	81	38	297	16	351	2	102	11	115	558	0
17:45 - 18:00	16	1	2	19	15	1	32	48	27	261	20	308	3	112	9	124	499	0
18:00 - 18:15	3	0	2	5	14	0	20	34	27	220	13	260	3	101	9	113	412	1
18:15 - 18:30	7	0	4	11	15	0	15	30	27	185	18	230	1	86	7	94	365	0
18:30 - 18:45	7	2	2	11	12	1	20	33	25	135	9	169	0	83	7	90	303	0
18:45 - 19:00	13	0	0	13	9	1	21	31	24	101	9	134	0	77	6	83	261	0
TOTAL	414	39	65	518	602	41	1810	2453	2465	6618	396	9479	42	5832	494	6368	18818	33
Trucks	4	0	0	4	3	1	10	14	19	84	3	106	0	54	2	56	180	1.0%
School Buses	1	0	0	1	0	0	1	1	1	21	4	26	2	5	0	7	35	0.2%

TOTAL AND PEAK HOUR VOLUME DIAGRAMS

Bush River Rd AT Outlet Pointe Blvd-Meadow Ct Date: 11/28/2016

12.0 HOUR TOTAL VOLUME
FROM 7:00 TO 15:00

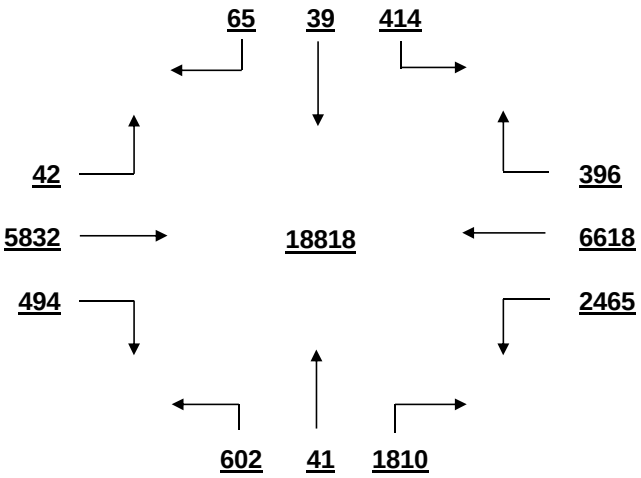

OVERALL PEAK HOUR VOLUME
FROM 16:45 TO 17:45

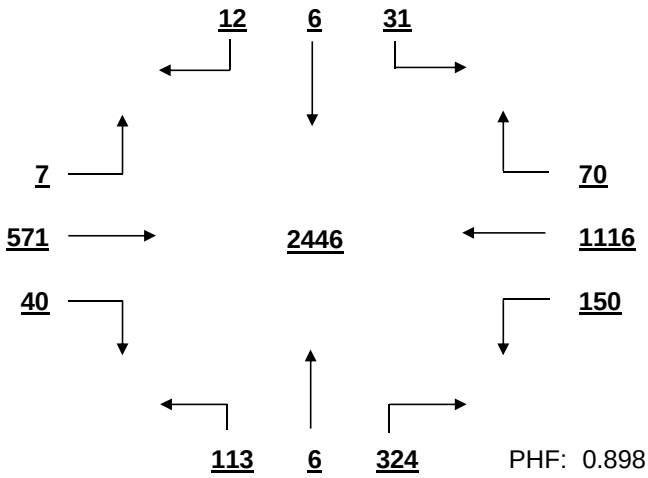

PHF: 0.898

AM PEAK HOUR VOLUME (0:00-10:45)
FROM 7:30 TO 8:30

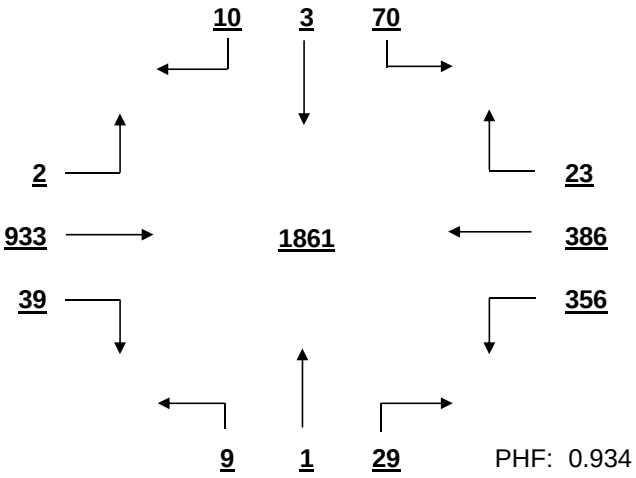

PHF: 0.934

PM PEAK HOUR VOLUME (14:15-23:45)
FROM 16:45 TO 17:45

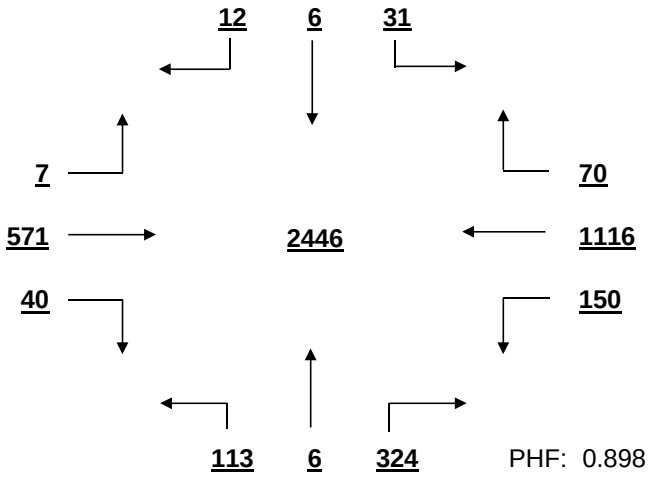

PHF: 0.898

MID-DAY PEAK HOUR VOLUME (11:00-14:00)
FROM 12:30 TO 13:30

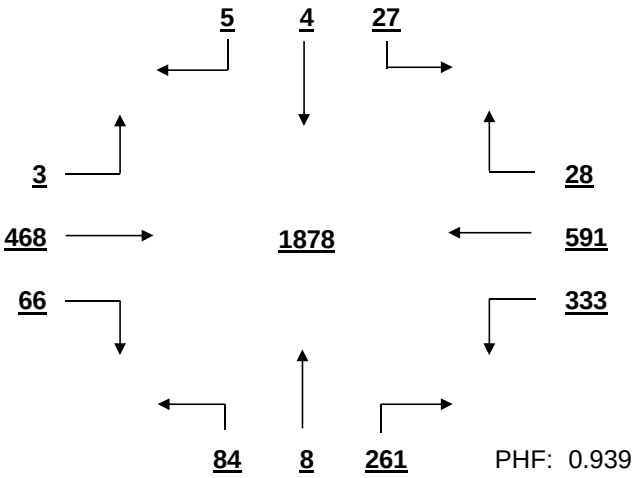

PHF: 0.939

OTHER HOUR VOLUME
FROM 7:00 TO 8:00

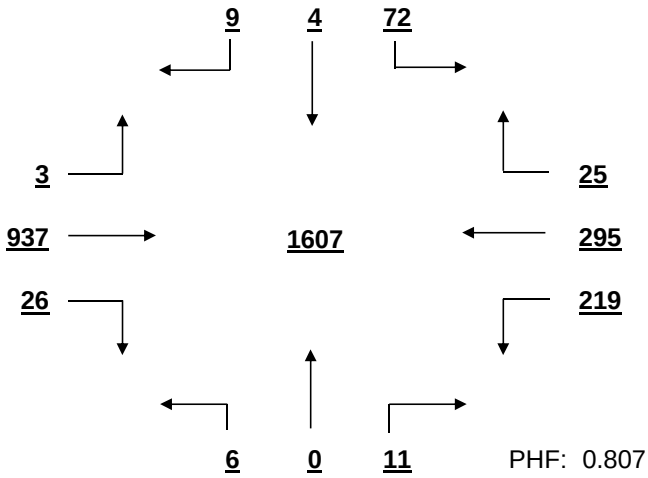

PHF: 0.807

SIGNAL WARRANT ANALYSIS

Bush River Rd AT Outlet Pointe Blvd-Meadow Ct Date: 11/28/2016

Minor Street Volume, percent of total = 15.8%
Percent of Left Turns from Minor Street = 34.2%
Percent of Right Turns from Minor Street = 63.1%
Percent of Minor Street Right Turns to Remove from Warrant Analysis = 0%
WARRANT BASIS = **100%**

Warrant No. 1 - Vehicular Volume is met

Condition A - Minimum Vehicular Volume is not met

Average Major Street % of Warrant	Average Minor Street % of Warrant
1320.6 / 600 = 220%	204.4 / 200 = 102%

Hourly percent of warrant

	7:00 - 8:00	8:00 - 9:00	9:00 - 10:00	10:00 - 11:00	11:00 - 12:00	12:00 - 13:00	13:00 - 14:00	14:00 - 15:00	15:00 - 16:00	16:00 - 17:00	17:00 - 18:00	18:00 - 19:00
Major St.	251%	249%	151%	140%	179%	236%	232%	214%	205%	265%	325%	196%
Minor St.	43%	32%	49%	62%	102%	179%	151%	100%	100%	194%	195%	64%

Condition B - Interruption to Continuous Traffic is met

Average Major Street % of Warrant	Average Minor Street % of Warrant
1320.6 / 900 = 147%	204.4 / 100 = 204%

Hourly percent of warrant

	7:00 - 8:00	8:00 - 9:00	9:00 - 10:00	10:00 - 11:00	11:00 - 12:00	12:00 - 13:00	13:00 - 14:00	14:00 - 15:00	15:00 - 16:00	16:00 - 17:00	17:00 - 18:00	18:00 - 19:00
Major St.	167%	166%	101%	93%	119%	157%	155%	142%	136%	176%	217%	130%
Minor St.	85%	63%	97%	123%	203%	357%	301%	199%	200%	387%	390%	128%

80% Combination of Conditions A & B is not met

Warrant No. 2 - Four Hour Vehicular Volume is met

Hourly percent of warrant

	7:00 - 8:00	8:00 - 9:00	9:00 - 10:00	10:00 - 11:00	11:00 - 12:00	12:00 - 13:00	13:00 - 14:00	14:00 - 15:00	15:00 - 16:00	16:00 - 17:00	17:00 - 18:00	18:00 - 19:00
Minor St.	74%	55%	42%	47%	120%	310%	262%	171%	157%	337%	339%	91%

Warrant No. 3 - Peak Hour is met

Percent of warrant		Percent of warrant	
Overall Peak Hour:	16:45 - 17:45	Higher Volume Side Street Peak Hour:	16:30 - 17:30
Minor St.	295%	Minor St.	315%

Warrant No. 4 - Pedestrian Volume. Pedestrian volume shown are minumum volumes assuming heavy major street traffic. If these volumes are met, warrant 4 requires further engineering analysis

Minimum 4 hour ped. volume crossing major street	Minimum peak hour ped. volume crossing major street
107	133

Number of pedestrians crossing major street

	7:00 - 8:00	8:00 - 9:00	9:00 - 10:00	10:00 - 11:00	11:00 - 12:00	12:00 - 13:00	13:00 - 14:00	14:00 - 15:00	15:00 - 16:00	16:00 - 17:00	17:00 - 18:00	18:00 - 19:00
Major St.	0	1	2	2	0	4	3	3	1	1	4	0

Warrant No. 7 - Crash Experience (Requires 3 criteria analysis by engineering)

Total Number: 0 From: 1/1/2005 to 1/1/2008
Accident Rate: 0.00 per million entering vehicles

Types of Accidents	No.	/	Avg.		No.	/	Avg.
Right Angle	0	/	0.0	Rear End	0	/	0.0
Lost Control	0	/	0.0	Side Swipe	0	/	0.0
Left Turn	0	/	0.0	Other	0	/	0.0

SOUTH CAROLINA DEPARTMENT OF TRANSPORTATION
DISTRICT 1
TRAFFIC ENGINEERING

County: Richland City: Columbia Date: 11/30/2016

Major Rt: Bush River Rd * Not on State System Minor Rt: Berryhill Dr Clear

Day of Week: Wednesday Weather: Rain Office: Short Counts JMS

Type of Control: Signal Speed Limit (major st) 40

Direction of Minor Street: N-S Intersection ADT - 27690 (Calc)

Number of Lanes (major st)* 2 Number of Lanes (minor st)* 1

* Each Direction

INTERSECTION VOLUME SUMMARY

	From N Berryhill Dr				From S Berryhill Dr				From E Bush River Rd				From W Bush River Rd				Total	Total
	LT	STR	RT	TOT	LT	STR	RT	TOT	LT	STR	RT	TOT	LT	STR	RT	TOT	Vol	Peds
7:00 - 7:15	12	0	1	13	0	0	0	0	0	80	33	113	11	112	0	123	249	0
7:15 - 7:30	51	0	2	53	0	0	0	0	0	144	65	209	10	258	0	268	530	0
7:30 - 7:45	48	0	7	55	0	0	0	0	0	185	103	288	14	309	0	323	666	0
7:45 - 8:00	46	0	5	51	0	0	0	0	0	193	87	280	12	287	0	299	630	0
8:00 - 8:15	33	0	4	37	0	0	0	0	0	180	106	286	7	267	0	274	597	0
8:15 - 8:30	13	0	0	13	0	0	0	0	0	95	49	144	4	116	0	120	277	0
8:30 - 8:45	35	0	16	51	0	0	0	0	0	190	104	294	18	206	0	224	569	0
8:45 - 9:00	25	0	6	31	0	0	0	0	0	167	94	261	11	181	0	192	484	0
9:00 - 9:15	18	0	5	23	0	0	0	0	0	128	51	179	13	156	0	169	371	0
9:15 - 9:30	19	0	4	23	0	0	0	0	0	118	54	172	9	133	0	142	337	0
9:30 - 9:45	31	0	3	34	0	0	0	0	0	112	46	158	12	128	0	140	332	0
9:45 - 10:00	17	0	4	21	0	0	0	0	0	126	38	164	10	130	0	140	325	0
10:00 - 10:15	29	0	6	35	0	0	0	0	0	106	21	127	12	96	0	108	270	0
10:15 - 10:30	19	0	4	23	0	0	0	0	0	115	32	147	13	111	0	124	294	1
10:30 - 10:45	35	0	3	38	0	0	0	0	0	96	21	117	11	82	0	93	248	0
10:45 - 11:00	22	0	6	28	0	0	0	0	0	125	25	150	11	97	0	108	286	0
11:00 - 11:15	40	0	10	50	0	0	0	0	0	143	28	171	10	110	0	120	341	0
11:15 - 11:30	33	0	7	40	0	0	0	0	0	131	25	156	14	115	0	129	325	0
11:30 - 11:45	46	0	17	63	0	0	0	0	0	164	35	199	12	149	0	161	423	0
11:45 - 12:00	53	0	18	71	0	0	0	0	0	158	37	195	15	176	0	191	457	0
12:00 - 12:15	71	0	27	98	0	0	0	0	0	188	23	211	18	210	0	228	537	1
12:15 - 12:30	47	0	17	64	0	0	0	0	0	223	39	262	15	206	0	221	547	0
12:30 - 12:45	41	0	10	51	0	0	0	0	0	184	35	219	24	214	0	238	508	0
12:45 - 13:00	48	0	12	60	0	0	0	0	0	211	53	264	19	191	0	210	534	0
13:00 - 13:15	60	0	23	83	0	0	0	0	0	166	47	213	29	225	0	254	550	0
13:15 - 13:30	46	0	20	66	0	0	0	0	0	218	55	273	18	168	0	186	525	0
13:30 - 13:45	42	0	10	52	0	0	0	0	0	194	51	245	21	219	0	240	537	0
13:45 - 14:00	42	0	8	50	0	0	0	0	0	207	64	271	20	187	0	207	528	0
14:00 - 14:15	40	0	14	54	0	0	0	0	0	165	32	197	27	156	0	183	434	1
14:15 - 14:30	32	0	7	39	0	0	0	0	0	142	35	177	12	129	0	141	357	0
14:30 - 14:45	28	0	5	33	0	0	0	0	0	130	23	153	8	110	0	118	304	0
14:45 - 15:00	52	0	8	60	0	0	0	0	0	154	18	172	13	154	0	167	399	0
15:00 - 15:15	53	0	7	60	0	0	0	0	0	169	15	184	10	149	0	159	403	0
15:15 - 15:30	51	0	7	58	0	0	0	0	0	172	17	189	3	108	0	111	358	0
15:30 - 15:45	45	0	7	52	0	0	0	0	0	172	26	198	6	164	0	170	420	0
15:45 - 16:00	48	0	12	60	0	0	0	0	0	208	38	246	6	158	0	164	470	0
16:00 - 16:15	73	0	17	90	0	0	0	0	0	214	23	237	11	193	0	204	531	0
16:15 - 16:30	68	0	3	71	0	0	0	0	0	194	19	213	6	139	0	145	429	0
16:30 - 16:45	111	0	18	129	0	0	0	0	0	214	38	252	2	192	0	194	575	2
16:45 - 17:00	89	0	10	99	0	0	0	0	0	326	31	357	13	168	0	181	637	0
17:00 - 17:15	131	0	16	147	0	0	0	0	0	321	32	353	9	302	0	311	811	1
17:15 - 17:30	90	0	10	100	0	0	0	0	0	341	61	402	7	237	0	244	746	0
17:30 - 17:45	87	0	9	96	0	0	0	0	0	265	51	316	8	137	0	145	557	0
17:45 - 18:00	60	0	10	70	0	0	0	0	0	288	29	317	6	164	0	170	557	0
18:00 - 18:15	58	0	5	63	0	0	0	0	0	329	34	363	8	149	0	157	583	0
18:15 - 18:30	31	0	2	33	0	0	0	0	0	251	32	283	8	122	0	130	446	1
18:30 - 18:45	21	0	6	27	0	0	0	0	0	227	15	242	8	105	0	113	382	0
18:45 - 19:00	20	0	5	25	0	0	0	0	0	207	16	223	6	92	0	98	346	1
TOTAL	2210	0	433	2643	0	0	0	0	0	8836	2006	10842	570	7967	0	8537	22022	8
Trucks	8	0	2	10	0	0	0	0	0	61	13	74	2	56	0	58	142	0.6%
School Buses	2	0	5	7	0	0	0	0	0	17	1	18	2	6	0	8	33	0.1%

TOTAL AND PEAK HOUR VOLUME DIAGRAMS

Bush River Rd AT Berryhill Dr Date: 11/30/2016

12.0 HOUR TOTAL VOLUME
FROM 7:00 TO 15:00

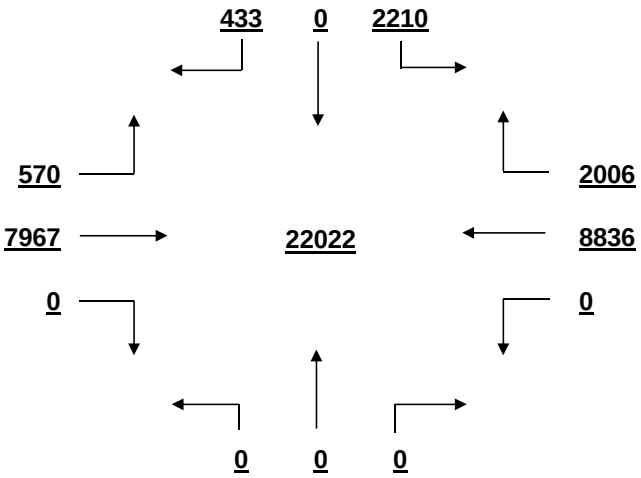

OVERALL PEAK HOUR VOLUME
FROM 16:30 TO 17:30

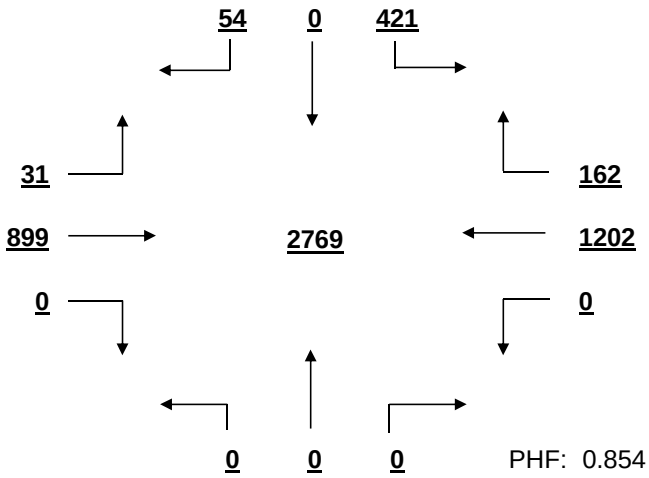

PHF: 0.854

AM PEAK HOUR VOLUME (0:00-10:45)
FROM 7:15 TO 8:15

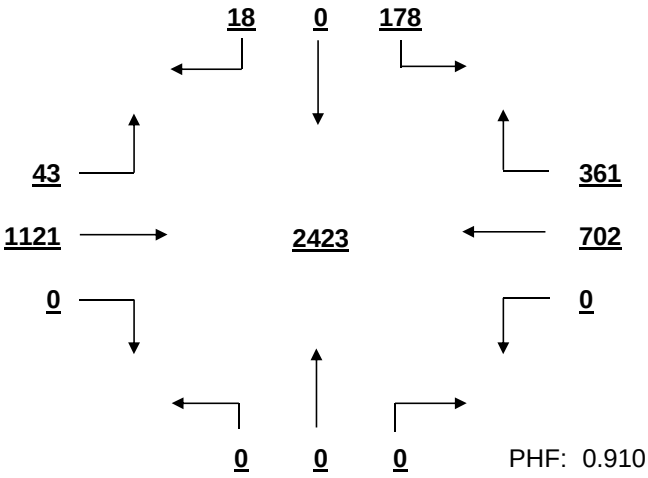

PHF: 0.910

PM PEAK HOUR VOLUME (14:15-23:45)
FROM 16:30 TO 17:30

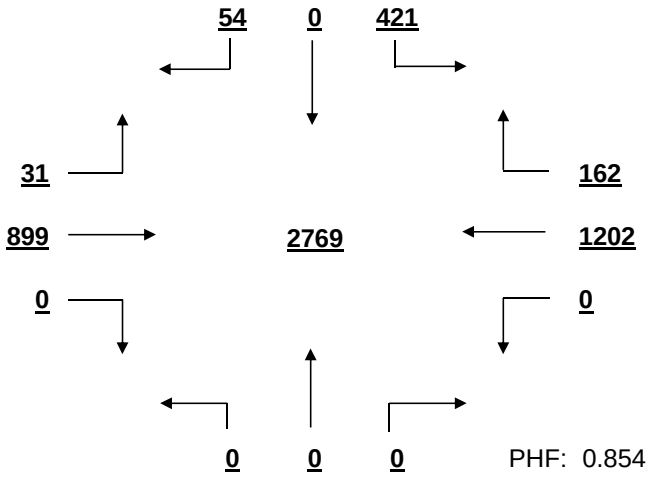

PHF: 0.854

MID-DAY PEAK HOUR VOLUME (11:00-14:00)
FROM 12:45 TO 13:45

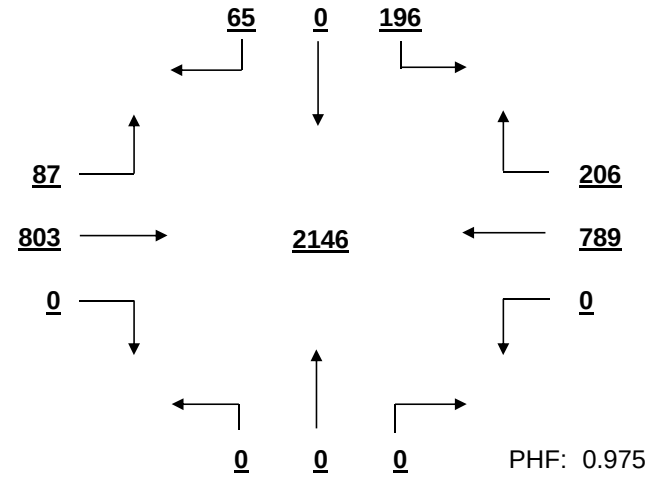

PHF: 0.975

OTHER HOUR VOLUME
FROM 7:00 TO 8:00

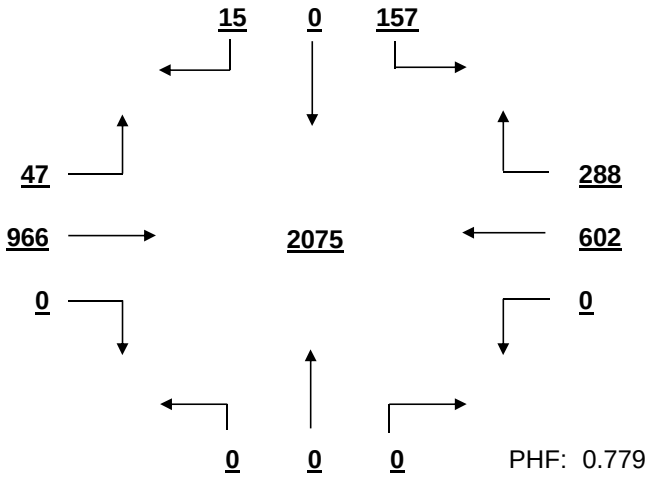

PHF: 0.779

SIGNAL WARRANT ANALYSIS

Bush River Rd AT Berryhill Dr Date: 11/30/2016

Minor Street Volume, percent of total = 12.0%
Percent of Left Turns from Minor Street = 83.6%
Percent of Right Turns from Minor Street = 16.4%
Percent of Minor Street Right Turns to Remove from Warrant Analysis = 0%
WARRANT BASIS = **100%**

Warrant No. 1 - Vehicular Volume is met

Condition A - Minimum Vehicular Volume is met

Average Major Street % of Warrant				Average Minor Street % of Warrant			
1614.9	/	600	= 269%	220.3	/	150	= 147%

Hourly percent of warrant

	7:00 - 8:00	8:00 - 9:00	9:00 - 10:00	10:00 - 11:00	11:00 - 12:00	12:00 - 13:00	13:00 - 14:00	14:00 - 15:00	15:00 - 16:00	16:00 - 17:00	17:00 - 18:00	18:00 - 19:00
Major St.	317%	299%	211%	162%	220%	309%	315%	218%	237%	297%	376%	268%
Minor St.	115%	88%	67%	83%	149%	182%	167%	124%	153%	259%	275%	99%

Condition B - Interruption to Continuous Traffic is met

Average Major Street % of Warrant				Average Minor Street % of Warrant			
1614.9	/	900	= 179%	220.3	/	75	= 294%

Hourly percent of warrant

	7:00 - 8:00	8:00 - 9:00	9:00 - 10:00	10:00 - 11:00	11:00 - 12:00	12:00 - 13:00	13:00 - 14:00	14:00 - 15:00	15:00 - 16:00	16:00 - 17:00	17:00 - 18:00	18:00 - 19:00
Major St.	211%	199%	140%	108%	147%	206%	210%	145%	158%	198%	251%	179%
Minor St.	229%	176%	135%	165%	299%	364%	335%	248%	307%	519%	551%	197%

80% Combination of Conditions A & B is met

Warrant No. 2 - Four Hour Vehicular Volume is met

Hourly percent of warrant

	7:00 - 8:00	8:00 - 9:00	9:00 - 10:00	10:00 - 11:00	11:00 - 12:00	12:00 - 13:00	13:00 - 14:00	14:00 - 15:00	15:00 - 16:00	16:00 - 17:00	17:00 - 18:00	18:00 - 19:00
Minor St.	215%	165%	106%	83%	249%	341%	314%	204%	288%	486%	516%	185%

Warrant No. 3 - Peak Hour is met

Percent of warrant			Percent of warrant		
Overall Peak Hour: 16:30 - 17:30			Higher Volume Side Street Peak Hour: 16:30 - 17:30		
Minor St.	475%		Minor St.	475%	

Warrant No. 4 - Pedestrian Volume. Pedestrian volume shown are minumum volumes assuming heavy major street traffic. If these volumes are met, warrant 4 requires further engineering analysis

Minimum 4 hour ped. volume crossing major street	Minimum peak hour ped. volume crossing major street
107	133

Number of pedestrians crossing major street

	7:00 - 8:00	8:00 - 9:00	9:00 - 10:00	10:00 - 11:00	11:00 - 12:00	12:00 - 13:00	13:00 - 14:00	14:00 - 15:00	15:00 - 16:00	16:00 - 17:00	17:00 - 18:00	18:00 - 19:00
Major St.	0	0	0	0	0	0	0	1	0	0	0	0

Warrant No. 7 - Crash Experience (Requires 3 criteria analysis by engineering)

Total Number: 0 From: 1/1/2005 to 1/1/2008
Accident Rate: 0.00 per million entering vehicles

Types of Accidents	No.	/	Avg.		No.	/	Avg.
Right Angle	0	/	0.0	Rear End	0	/	0.0
Lost Control	0	/	0.0	Side Swipe	0	/	0.0
Left Turn	0	/	0.0	Other	0	/	0.0

SOUTH CAROLINA DEPARTMENT OF TRANSPORTATION
DISTRICT 1
TRAFFIC ENGINEERING

County: Richland City: Columbia Date: 11/29/2016

Major Rt: Bush River Rd * Not on State System Minor Rt: Rockland Rd Clear

Day of Week: Tuesday Weather: Rain Office: Short Counts JMS

Type of Control: Stop Sign Speed Limit (major st) 40

Direction of Minor Street: N-S Intersection ADT - 21150 (Calc)

Number of Lanes (major st)* 2 Number of Lanes (minor st)* 1

* Each Direction

INTERSECTION VOLUME SUMMARY

	From N Rockland Rd				From S Rockland Rd				From E Bush River Rd				From W Bush River Rd				Total	Total
	LT	STR	RT	TOT	LT	STR	RT	TOT	LT	STR	RT	TOT	LT	STR	RT	TOT	Vol	Peds
7:00 - 7:15	2	0	6	8	0	0	1	1	2	79	3	84	10	215	1	226	319	1
7:15 - 7:30	3	0	6	9	0	0	1	1	0	96	2	98	8	321	0	329	437	0
7:30 - 7:45	3	0	14	17	1	0	0	1	2	120	3	125	7	343	1	351	494	5
7:45 - 8:00	2	0	13	15	0	0	1	1	2	117	6	125	5	355	0	360	501	0
8:00 - 8:15	3	0	13	16	0	0	1	1	1	125	3	129	1	361	1	363	509	0
8:15 - 8:30	2	0	0	2	0	0	1	1	2	117	0	119	8	361	4	373	495	0
8:30 - 8:45	5	0	7	12	1	0	2	3	3	115	5	123	8	248	1	257	395	1
8:45 - 9:00	1	0	9	10	1	0	1	2	4	99	0	103	8	181	8	197	312	0
9:00 - 9:15	3	0	8	11	1	0	0	1	6	95	3	104	10	143	11	164	280	1
9:15 - 9:30	0	0	3	3	3	0	1	4	5	94	5	104	3	111	9	123	234	1
9:30 - 9:45	3	0	5	8	6	0	2	8	9	71	5	85	6	113	15	134	235	1
9:45 - 10:00	2	0	5	7	6	0	4	10	6	85	6	97	7	116	13	136	250	2
10:00 - 10:15	3	0	4	7	0	0	0	0	10	82	2	94	1	101	13	115	216	0
10:15 - 10:30	0	0	1	1	7	0	7	14	7	76	1	84	3	104	17	124	223	0
10:30 - 10:45	1	0	2	3	10	1	8	19	13	77	3	93	3	87	24	114	229	0
10:45 - 11:00	2	0	5	7	11	0	6	17	18	94	3	115	3	107	19	129	268	0
11:00 - 11:15	0	0	7	7	10	0	17	27	12	113	1	126	6	99	26	131	291	0
11:15 - 11:30	3	0	2	5	14	1	12	27	11	103	2	116	2	115	21	138	286	0
11:30 - 11:45	2	0	10	12	12	1	12	25	16	125	2	143	2	127	18	147	327	0
11:45 - 12:00	2	0	7	9	11	0	14	25	11	129	0	140	4	141	20	165	339	2
12:00 - 12:15	2	0	9	11	18	0	16	34	15	133	4	152	3	180	20	203	400	0
12:15 - 12:30	2	0	6	8	22	0	12	34	9	175	4	188	10	170	24	204	434	0
12:30 - 12:45	3	0	5	8	25	0	12	37	16	181	5	202	1	158	23	182	429	0
12:45 - 13:00	1	0	7	8	17	0	13	30	8	164	1	173	5	150	25	180	391	0
13:00 - 13:15	2	0	5	7	16	0	12	28	11	155	2	168	3	144	26	173	376	1
13:15 - 13:30	2	0	6	8	18	0	16	34	16	158	3	177	2	142	29	173	392	1
13:30 - 13:45	3	0	8	11	17	0	13	30	15	170	6	191	7	138	21	166	398	0
13:45 - 14:00	3	1	7	11	24	0	17	41	14	166	4	184	5	131	14	150	386	1
14:00 - 14:15	3	0	3	6	21	0	15	36	7	128	3	138	6	124	23	153	333	2
14:15 - 14:30	0	1	1	2	19	0	8	27	14	147	6	167	1	119	0	120	316	0
14:30 - 14:45	7	0	4	11	19	1	20	40	9	145	6	160	4	112	15	131	342	0
14:45 - 15:00	5	0	2	7	17	0	11	28	8	129	3	140	5	123	13	141	316	0
15:00 - 15:15	5	0	12	17	21	0	9	30	9	154	11	174	7	139	13	159	380	0
15:15 - 15:30	6	0	6	12	18	0	14	32	10	152	2	164	8	121	9	138	346	0
15:30 - 15:45	3	0	8	11	14	1	16	31	5	137	2	144	6	113	4	123	309	0
15:45 - 16:00	3	1	10	14	11	0	5	16	3	145	11	159	3	107	15	125	314	3
16:00 - 16:15	8	0	10	18	10	0	9	19	7	203	4	214	8	125	9	142	393	0
16:15 - 16:30	2	0	4	6	8	0	11	19	7	252	9	268	9	140	2	151	444	0
16:30 - 16:45	2	0	16	18	7	1	8	16	5	274	8	287	14	148	6	168	489	0
16:45 - 17:00	0	0	6	6	5	1	8	14	6	325	4	335	12	138	7	157	512	0
17:00 - 17:15	3	0	15	18	5	0	12	17	4	319	7	330	9	181	9	199	564	0
17:15 - 17:30	1	0	13	14	1	0	9	10	5	289	2	296	5	150	9	164	484	0
17:30 - 17:45	3	0	10	13	2	0	9	11	1	348	7	356	1	164	7	172	552	1
17:45 - 18:00	5	0	9	14	8	0	8	16	9	317	9	335	8	133	9	150	515	0
18:00 - 18:15	2	0	7	9	8	0	11	19	2	249	8	259	5	131	10	146	433	0
18:15 - 18:30	2	0	7	9	7	0	10	17	3	237	10	250	13	98	6	117	393	0
18:30 - 18:45	5	0	6	11	7	0	4	11	2	195	9	206	5	70	9	84	312	0
18:45 - 19:00	2	0	4	6	8	0	6	14	4	154	14	172	6	80	3	89	281	0
TOTAL	127	3	333	463	467	7	405	879	364	7613	219	8196	276	7478	582	8336	17874	23
Trucks	1	0	8	9	0	0	0	0	0	134	1	135	8	134	1	143	287	1.6%
School Buses	0	0	0	0	1	0	0	1	0	24	0	24	0	11	1	12	37	0.2%

TOTAL AND PEAK HOUR VOLUME DIAGRAMS

Bush River Rd AT Rockland Rd Date: 11/29/2016

12.0 HOUR TOTAL VOLUME
FROM 7:00 TO 15:00

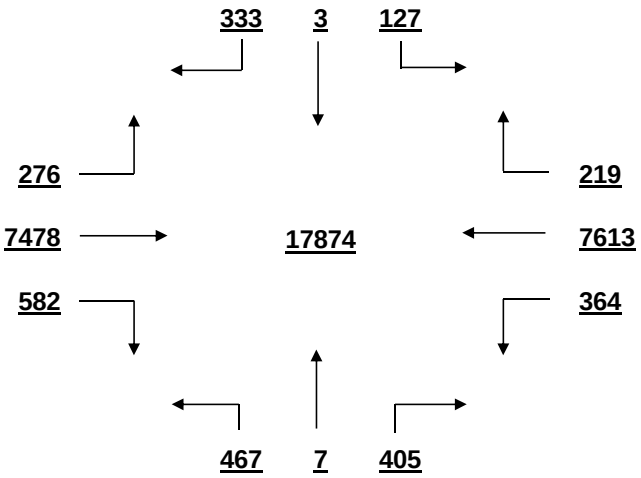

OVERALL PEAK HOUR VOLUME
FROM 17:00 TO 18:00

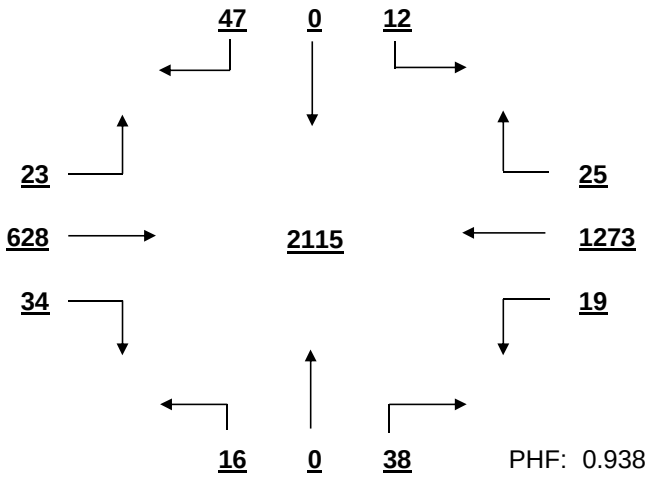

PHF: 0.938

AM PEAK HOUR VOLUME (0:00-10:45)
FROM 7:30 TO 8:30

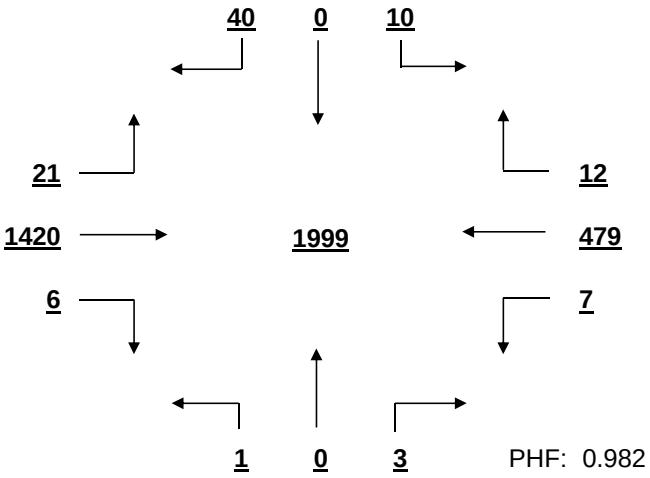

PHF: 0.982

PM PEAK HOUR VOLUME (14:15-23:45)
FROM 17:00 TO 18:00

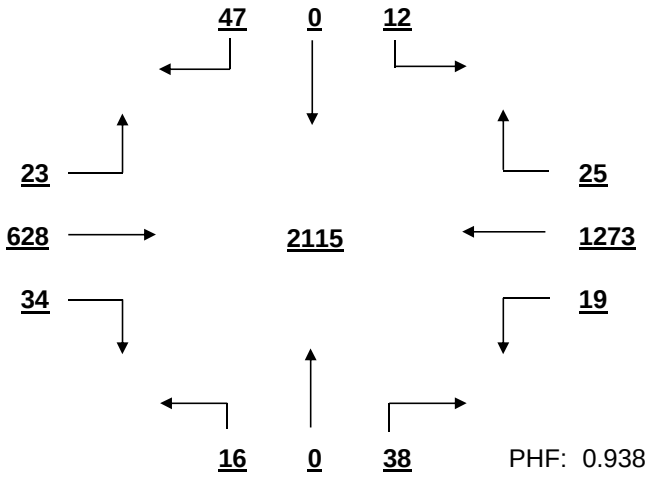

PHF: 0.938

MID-DAY PEAK HOUR VOLUME (11:00-14:00)
FROM 12:00 TO 13:00

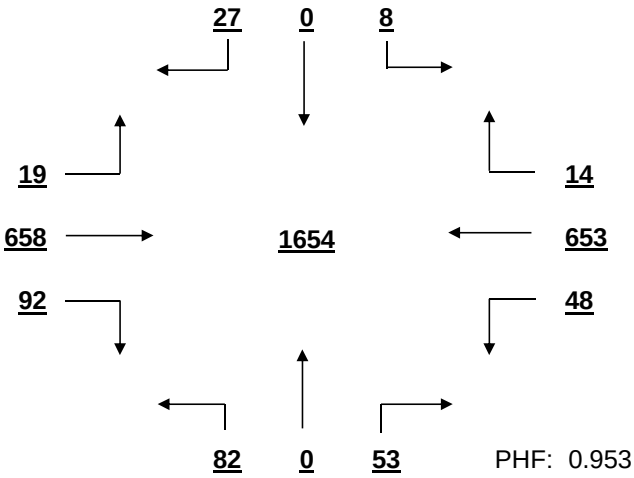

PHF: 0.953

OTHER HOUR VOLUME
FROM 7:00 TO 8:00

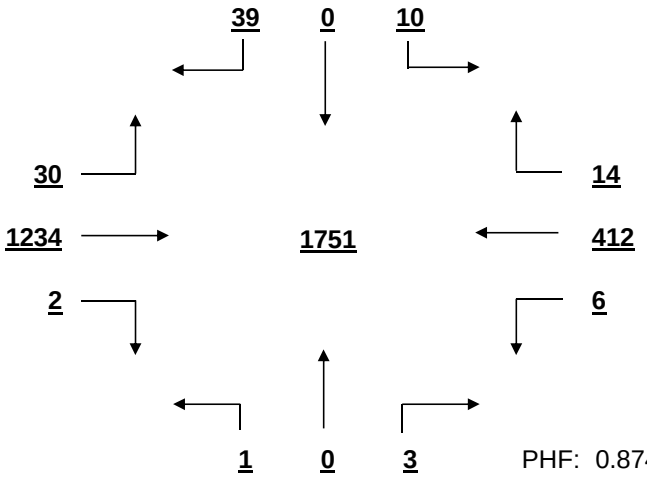

PHF: 0.874

SIGNAL WARRANT ANALYSIS

Bush River Rd AT Rockland Rd Date: 11/29/2016

Minor Street Volume, percent of total = 7.5%
Percent of Left Turns from Minor Street = 44.3%
Percent of Right Turns from Minor Street = 55.0%
Percent of Minor Street Right Turns to Remove from Warrant Analysis = 0%
WARRANT BASIS = **100%**

Warrant No. 1 - Vehicular Volume is not met

Condition A - Minimum Vehicular Volume is not met

Average Major Street % of Warrant				Average Minor Street % of Warrant			
1377.7	/	600 =	230%	73.3	/	150 =	49%

Hourly percent of warrant

	7:00 - 8:00	8:00 - 9:00	9:00 - 10:00	10:00 - 11:00	11:00 - 12:00	12:00 - 13:00	13:00 - 14:00	14:00 - 15:00	15:00 - 16:00	16:00 - 17:00	17:00 - 18:00	18:00 - 19:00
Major St.	283%	277%	158%	145%	184%	247%	230%	192%	198%	287%	334%	221%
Minor St.	33%	27%	19%	33%	69%	90%	89%	87%	73%	45%	39%	41%

Condition B - Interruption to Continuous Traffic is not met

Average Major Street % of Warrant				Average Minor Street % of Warrant			
1377.7	/	900 =	153%	73.3	/	75 =	98%

Hourly percent of warrant

	7:00 - 8:00	8:00 - 9:00	9:00 - 10:00	10:00 - 11:00	11:00 - 12:00	12:00 - 13:00	13:00 - 14:00	14:00 - 15:00	15:00 - 16:00	16:00 - 17:00	17:00 - 18:00	18:00 - 19:00
Major St.	189%	185%	105%	96%	123%	165%	154%	128%	132%	191%	222%	147%
Minor St.	65%	53%	39%	67%	139%	180%	177%	175%	145%	91%	79%	81%

80% Combination of Conditions A & B is not met

Warrant No. 2 - Four Hour Vehicular Volume is met

Hourly percent of warrant

	7:00 - 8:00	8:00 - 9:00	9:00 - 10:00	10:00 - 11:00	11:00 - 12:00	12:00 - 13:00	13:00 - 14:00	14:00 - 15:00	15:00 - 16:00	16:00 - 17:00	17:00 - 18:00	18:00 - 19:00
Minor St.	61%	50%	18%	28%	87%	169%	166%	117%	103%	85%	74%	68%

Warrant No. 3 - Peak Hour is not met

	Percent of warrant		Percent of warrant
Overall Peak Hour:	17:00 - 18:00	Higher Volume Side Street Peak Hour:	13:45 - 14:45
Minor St.	59%	Minor St.	67%

Warrant No. 4 - Pedestrian Volume. Pedestrian volume shown are minumum volumes assuming heavy major street traffic. If these volumes are met, warrant 4 requires further engineering analysis

Minimum 4 hour ped. volume crossing major street: 107

Minimum peak hour ped. volume crossing major street: 133

Number of pedestrians crossing major street

	7:00 - 8:00	8:00 - 9:00	9:00 - 10:00	10:00 - 11:00	11:00 - 12:00	12:00 - 13:00	13:00 - 14:00	14:00 - 15:00	15:00 - 16:00	16:00 - 17:00	17:00 - 18:00	18:00 - 19:00
Major St.	3	1	5	0	0	0	3	1	3	0	1	0

Warrant No. 7 - Crash Experience (Requires 3 criteria analysis by engineering)

Total Number: 0 From: 1/1/2005 to 1/1/2008

Accident Rate: 0.00 per million entering vehicles

Types of Accidents	No.	/	Avg.		No.	/	Avg.
Right Angle	0	/	0.0	Rear End	0	/	0.0
Lost Control	0	/	0.0	Side Swipe	0	/	0.0
Left Turn	0	/	0.0	Other	0	/	0.0

SOUTH CAROLINA DEPARTMENT OF TRANSPORTATION
DISTRICT 1
TRAFFIC ENGINEERING

County: Richland City: Columbia Date: 11/30/2016

Major Rt: Bush River Rd * Not on State System Minor Rt: Independence Ave-Fuddruckers Clear

Day of Week: Wednesday Weather: Rain Office: Short Counts JMS

Type of Control: Signal Speed Limit (major st) 40

Direction of Minor Street: N-S Intersection ADT - 21420 (Calc)

Number of Lanes (major st)* 2 Number of Lanes (minor st)* 1

* Each Direction

INTERSECTION VOLUME SUMMARY

	From N Independence Ave-F				From S Independence Ave-F				From E Bush River Rd				From W Bush River Rd				Total	Total
	LT	STR	RT	TOT	LT	STR	RT	TOT	LT	STR	RT	TOT	LT	STR	RT	TOT	Vol	Peds
7:00 - 7:15	0	0	1	1	5	0	1	6	4	58	0	62	0	213	8	221	290	1
7:15 - 7:30	0	0	0	0	2	0	3	5	1	99	0	100	0	299	0	299	404	0
7:30 - 7:45	2	0	0	2	1	0	0	1	1	161	2	164	0	345	10	355	522	1
7:45 - 8:00	0	0	0	0	4	0	5	9	2	146	0	148	0	354	9	363	520	0
8:00 - 8:15	1	0	0	1	1	0	6	7	3	135	1	139	0	359	4	363	510	1
8:15 - 8:30	0	0	0	0	5	0	4	9	1	142	0	143	0	337	0	337	489	0
8:30 - 8:45	0	0	0	0	2	0	2	4	2	130	0	132	0	287	2	289	425	3
8:45 - 9:00	0	0	0	0	4	0	1	5	3	106	1	110	0	196	3	199	314	1
9:00 - 9:15	0	0	0	0	5	0	2	7	4	90	2	96	1	174	2	177	280	0
9:15 - 9:30	1	0	0	1	2	0	3	5	6	100	0	106	0	130	5	135	247	0
9:30 - 9:45	0	0	0	0	0	0	3	3	2	97	0	99	0	124	7	131	233	1
9:45 - 10:00	0	0	0	0	4	0	4	8	0	80	0	80	0	131	3	134	222	3
10:00 - 10:15	0	0	0	0	0	0	0	0	3	87	1	91	0	98	4	102	193	0
10:15 - 10:30	1	0	1	2	2	0	1	3	2	112	1	115	0	119	0	119	239	1
10:30 - 10:45	0	0	0	0	1	0	1	2	1	97	1	99	0	108	1	109	210	1
10:45 - 11:00	0	0	0	0	4	0	1	5	2	104	3	109	0	119	4	123	237	1
11:00 - 11:15	0	0	0	0	4	0	2	6	3	143	0	146	1	117	5	123	275	1
11:15 - 11:30	1	0	0	1	5	0	6	11	2	133	4	139	0	131	0	131	282	1
11:30 - 11:45	1	0	0	1	6	0	2	8	3	155	4	162	0	128	4	132	303	0
11:45 - 12:00	0	0	0	0	6	0	2	8	1	123	1	125	0	147	3	150	283	1
12:00 - 12:15	2	0	1	3	5	0	2	7	4	158	5	167	1	210	6	217	394	0
12:15 - 12:30	4	0	1	5	2	0	5	7	5	189	5	199	2	189	7	198	409	0
12:30 - 12:45	1	0	0	1	5	0	2	7	2	170	3	175	0	170	8	178	361	0
12:45 - 13:00	4	0	1	5	7	0	3	10	2	181	3	186	2	188	4	194	395	1
13:00 - 13:15	1	0	0	1	3	0	3	6	1	164	7	172	3	202	2	207	386	1
13:15 - 13:30	1	0	1	2	3	0	6	9	5	175	3	183	0	170	5	175	369	4
13:30 - 13:45	2	0	1	3	1	0	2	3	3	155	2	160	1	171	4	176	342	2
13:45 - 14:00	3	0	3	6	1	0	1	2	11	174	4	189	0	174	6	180	377	1
14:00 - 14:15	0	0	1	1	3	0	1	4	1	158	3	162	0	128	7	135	302	0
14:15 - 14:30	0	0	2	2	1	0	6	7	2	181	0	183	1	125	0	126	318	3
14:30 - 14:45	1	0	0	1	4	0	2	6	1	152	1	154	0	152	5	157	318	0
14:45 - 15:00	1	0	0	1	5	0	2	7	2	154	1	157	0	138	6	144	309	0
15:00 - 15:15	0	0	0	0	4	0	2	6	0	148	1	149	0	121	3	124	279	0
15:15 - 15:30	1	0	0	1	4	0	1	5	3	157	1	161	0	149	5	154	321	0
15:30 - 15:45	0	0	0	0	9	0	2	11	2	161	1	164	0	139	8	147	322	1
15:45 - 16:00	1	0	0	1	2	0	3	5	5	164	3	172	0	128	5	133	311	0
16:00 - 16:15	1	0	0	1	13	0	7	20	2	197	0	199	0	146	5	151	371	1
16:15 - 16:30	0	0	1	1	6	0	3	9	4	238	3	245	2	137	9	148	403	0
16:30 - 16:45	2	0	0	2	4	0	7	11	10	267	0	277	0	171	7	178	468	1
16:45 - 17:00	2	0	0	2	5	0	7	12	7	294	2	303	1	165	2	168	485	1
17:00 - 17:15	3	0	0	3	12	1	9	22	8	321	4	333	0	214	2	216	574	1
17:15 - 17:30	0	1	0	1	5	0	6	11	2	326	0	328	0	201	2	203	543	5
17:30 - 17:45	0	0	3	3	11	0	6	17	8	333	2	343	2	166	1	169	532	0
17:45 - 18:00	1	0	0	1	9	0	3	12	5	309	2	316	0	157	7	164	493	2
18:00 - 18:15	2	0	0	2	4	1	3	8	3	285	3	291	1	149	6	156	457	6
18:15 - 18:30	0	0	0	0	3	0	3	6	3	256	2	261	0	138	1	139	406	0
18:30 - 18:45	4	0	0	4	3	0	1	4	3	203	0	206	0	117	4	121	335	0
18:45 - 19:00	1	0	0	1	0	0	0	0	1	183	1	185	0	114	1	115	301	0
TOTAL	45	1	17	63	197	2	147	346	151	8151	83	8385	18	8345	202	8565	17359	47
Trucks	0	0	0	0	19	0	28	47	54	72	0	126	0	56	51	107	280	1.6%
School Buses	0	0	0	0	0	0	0	0	2	24	0	26	0	11	0	11	37	0.2%

TOTAL AND PEAK HOUR VOLUME DIAGRAMS

Bush River Rd AT Independence Ave-Fuddruckers Date: 11/30/2016

12.0 HOUR TOTAL VOLUME
FROM 7:00 TO 15:00

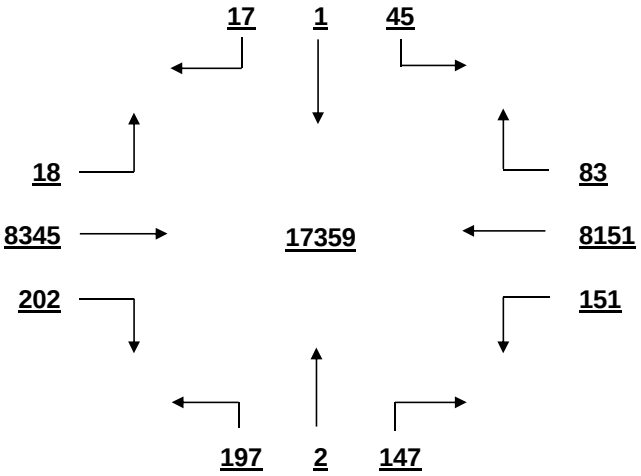

OVERALL PEAK HOUR VOLUME
FROM 17:00 TO 18:00

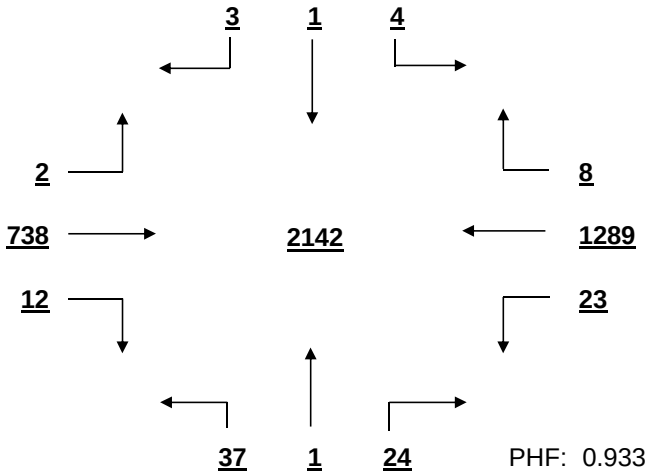

PHF: 0.933

AM PEAK HOUR VOLUME (0:00-10:45)
FROM 7:30 TO 8:30

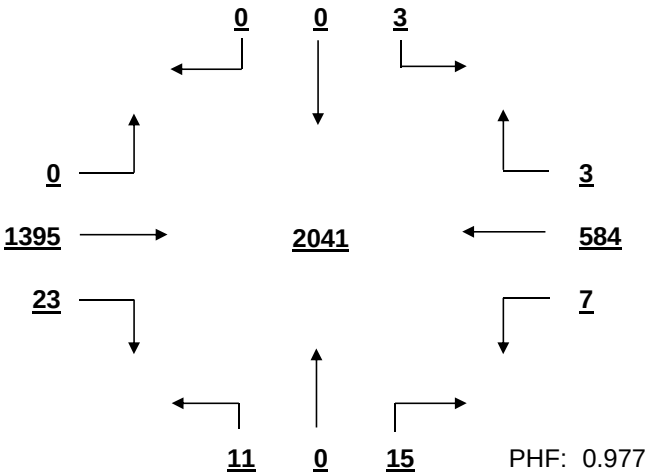

PHF: 0.977

PM PEAK HOUR VOLUME (14:15-23:45)
FROM 17:00 TO 18:00

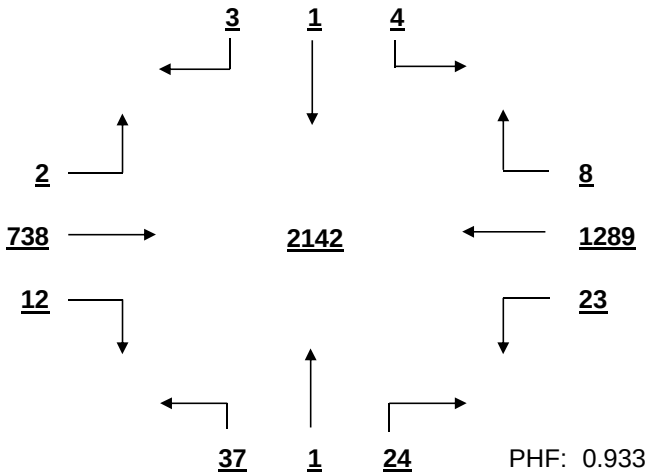

PHF: 0.933

MID-DAY PEAK HOUR VOLUME (11:00-14:00)
FROM 12:00 TO 13:00

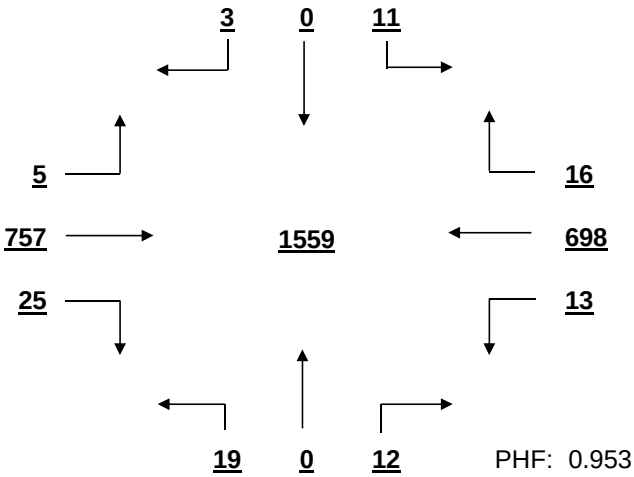

PHF: 0.953

OTHER HOUR VOLUME
FROM 7:00 TO 8:00

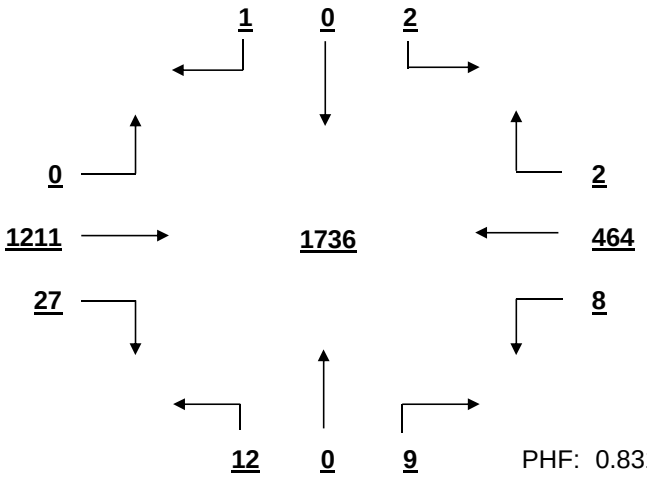

PHF: 0.831

SIGNAL WARRANT ANALYSIS

Bush River Rd AT Independence Ave-Fuddruckers Date: 11/30/2016

Minor Street Volume, percent of total = 2.4%
Percent of Left Turns from Minor Street = 59.2%
Percent of Right Turns from Minor Street = 40.1%
Percent of Minor Street Right Turns to Remove from Warrant Analysis = 0%
WARRANT BASIS = **100%**

Warrant No. 1 - Vehicular Volume is not met

Condition A - Minimum Vehicular Volume is not met

Average Major Street % of Warrant				Average Minor Street % of Warrant			
1412.5	/	600	= 235%	28.8	/	150	= 19%

Hourly percent of warrant

	7:00 - 8:00	8:00 - 9:00	9:00 - 10:00	10:00 - 11:00	11:00 - 12:00	12:00 - 13:00	13:00 - 14:00	14:00 - 15:00	15:00 - 16:00	16:00 - 17:00	17:00 - 18:00	18:00 - 19:00
Major St.	285%	285%	160%	145%	185%	252%	240%	203%	201%	278%	345%	246%
Minor St.	14%	17%	15%	7%	22%	21%	13%	16%	18%	35%	41%	12%

Condition B - Interruption to Continuous Traffic is not met

Average Major Street % of Warrant				Average Minor Street % of Warrant			
1412.5	/	900	= 157%	28.8	/	75	= 38%

Hourly percent of warrant

	7:00 - 8:00	8:00 - 9:00	9:00 - 10:00	10:00 - 11:00	11:00 - 12:00	12:00 - 13:00	13:00 - 14:00	14:00 - 15:00	15:00 - 16:00	16:00 - 17:00	17:00 - 18:00	18:00 - 19:00
Major St.	190%	190%	106%	96%	123%	168%	160%	135%	134%	185%	230%	164%
Minor St.	28%	33%	31%	13%	44%	41%	27%	32%	36%	69%	83%	24%

80% Combination of Conditions A & B is not met

Warrant No. 2 - Four Hour Vehicular Volume is not met

Hourly percent of warrant

	7:00 - 8:00	8:00 - 9:00	9:00 - 10:00	10:00 - 11:00	11:00 - 12:00	12:00 - 13:00	13:00 - 14:00	14:00 - 15:00	15:00 - 16:00	16:00 - 17:00	17:00 - 18:00	18:00 - 19:00
Minor St.	26%	31%	15%	6%	28%	39%	25%	24%	26%	65%	78%	23%

Warrant No. 3 - Peak Hour is not met

Percent of warrant			Percent of warrant	
Overall Peak Hour:	17:00 - 18:00	Higher Volume Side Street Peak Hour:	16:45 - 17:45	
Minor St.	62%	Minor St.	62%	

Warrant No. 4 - Pedestrian Volume. Pedestrian volume shown are minumum volumes assuming heavy major street traffic. If these volumes are met, warrant 4 requires further engineering analysis

Minimum 4 hour ped. volume crossing major street: 107

Minimum peak hour ped. volume crossing major street: 133

Number of pedestrians crossing major street

	7:00 - 8:00	8:00 - 9:00	9:00 - 10:00	10:00 - 11:00	11:00 - 12:00	12:00 - 13:00	13:00 - 14:00	14:00 - 15:00	15:00 - 16:00	16:00 - 17:00	17:00 - 18:00	18:00 - 19:00
Major St.	2	5	4	3	3	1	8	3	1	3	4	6

Warrant No. 7 - Crash Experience (Requires 3 criteria analysis by engineering)

Total Number: 0 From: 1/1/2005 to 1/1/2008

Accident Rate: 0.00 per million entering vehicles

Types of Accidents	No.	/	Avg.		No.	/	Avg.
Right Angle	0	/	0.0	Rear End	0	/	0.0
Lost Control	0	/	0.0	Side Swipe	0	/	0.0
Left Turn	0	/	0.0	Other	0	/	0.0

SOUTH CAROLINA DEPARTMENT OF TRANSPORTATION
DISTRICT 1
TRAFFIC ENGINEERING

County: Richland City: Columbia Date: 11/29/2016

Major Rt: Bush River Rd * Not on State System Minor Rt: Zimalcrest-Walmart Clear

Day of Week: Tuesday Weather: Rain Office: Short Counts JMS

Type of Control: Signal Speed Limit (major st) 40

Direction of Minor Street: N-S Intersection ADT - 23410 (Calc)

Number of Lanes (major st)* 2 Number of Lanes (minor st)* 1 * Each Direction

INTERSECTION VOLUME SUMMARY

	From N Zimalcrest-Walmart				From S Zimalcrest-Walmart				From E Bush River Rd				From W Bush River Rd				Total	Total
	LT	STR	RT	TOT	LT	STR	RT	TOT	LT	STR	RT	TOT	LT	STR	RT	TOT	Vol	Peds
7:00 - 7:15	3	0	0	3	2	1	31	34	26	69	4	99	0	181	10	191	327	0
7:15 - 7:30	11	1	0	12	6	0	23	29	18	88	3	109	1	293	0	294	444	2
7:30 - 7:45	6	0	1	7	8	0	26	34	38	112	2	152	1	329	8	338	531	0
7:45 - 8:00	12	1	0	13	9	0	40	49	30	113	7	150	1	290	18	309	521	2
8:00 - 8:15	5	1	0	6	6	1	28	35	25	117	7	149	1	330	15	346	536	1
8:15 - 8:30	4	0	0	4	8	0	31	39	35	105	1	141	1	327	17	345	529	1
8:30 - 8:45	3	0	0	3	7	0	33	40	35	101	3	139	2	262	10	274	456	1
8:45 - 9:00	3	1	1	5	9	0	29	38	26	84	5	115	0	141	8	149	307	1
9:00 - 9:15	1	0	0	1	6	0	25	31	38	110	4	152	1	140	9	150	334	2
9:15 - 9:30	6	0	1	7	6	0	29	35	33	88	6	127	0	100	9	109	278	1
9:30 - 9:45	3	0	0	3	6	0	30	36	24	83	0	107	0	95	12	107	253	0
9:45 - 10:00	5	1	3	9	7	0	32	39	33	79	5	117	0	84	9	93	258	1
10:00 - 10:15	6	1	0	7	0	3	0	3	42	76	2	120	1	97	13	111	241	0
10:15 - 10:30	6	0	0	6	9	1	33	43	44	76	5	125	0	84	11	95	269	4
10:30 - 10:45	3	0	0	3	13	1	37	51	48	84	4	136	0	91	16	107	297	3
10:45 - 11:00	3	0	1	4	8	0	37	45	45	99	8	152	0	84	11	95	296	1
11:00 - 11:15	5	0	2	7	11	1	37	49	35	99	1	135	0	93	16	109	300	0
11:15 - 11:30	7	1	0	8	11	1	49	61	44	92	4	140	0	106	20	126	335	1
11:30 - 11:45	3	0	0	3	20	0	34	54	42	129	4	175	0	129	12	141	373	2
11:45 - 12:00	5	0	0	5	14	0	47	61	71	128	5	204	1	128	19	148	418	0
12:00 - 12:15	3	0	1	4	14	0	43	57	63	149	7	219	0	154	24	178	458	0
12:15 - 12:30	5	1	2	8	34	0	58	92	75	137	11	223	1	143	26	170	493	0
12:30 - 12:45	4	1	4	9	17	2	57	76	57	163	5	225	0	149	14	163	473	3
12:45 - 13:00	2	1	3	6	20	1	64	85	55	135	4	194	0	128	27	155	440	0
13:00 - 13:15	5	0	0	5	20	0	54	74	66	173	4	243	0	165	16	181	503	0
13:15 - 13:30	6	0	0	6	35	0	55	90	60	128	4	192	0	136	18	154	442	0
13:30 - 13:45	3	1	0	4	15	1	52	68	71	163	5	239	1	131	12	144	455	1
13:45 - 14:00	5	1	2	8	22	1	58	81	33	141	3	177	2	124	15	141	407	1
14:00 - 14:15	4	1	1	6	8	0	42	50	56	126	5	187	2	114	22	138	381	0
14:15 - 14:30	7	1	0	8	18	0	44	62	37	131	9	177	2	96	0	98	345	1
14:30 - 14:45	6	0	1	7	18	0	38	56	53	139	10	202	0	124	10	134	399	1
14:45 - 15:00	3	0	0	3	19	0	52	71	38	103	6	147	2	108	14	124	345	4
15:00 - 15:15	7	2	2	11	20	0	43	63	51	136	9	196	2	124	18	144	414	1
15:15 - 15:30	6	0	0	6	16	0	40	56	45	143	9	197	0	118	23	141	400	0
15:30 - 15:45	5	0	1	6	19	2	39	60	57	117	5	179	1	117	18	136	381	0
15:45 - 16:00	4	0	1	5	16	1	41	58	39	131	7	177	0	92	15	107	347	2
16:00 - 16:15	3	0	0	3	16	2	49	67	48	178	10	236	0	109	13	122	428	0
16:15 - 16:30	6	0	0	6	21	1	48	70	55	209	6	270	0	120	16	136	482	0
16:30 - 16:45	8	1	5	14	19	0	51	70	55	230	3	288	1	143	19	163	535	1
16:45 - 17:00	4	0	3	7	34	1	41	76	48	275	5	328	0	103	16	119	530	0
17:00 - 17:15	4	0	1	5	23	0	45	68	44	275	2	321	1	170	18	189	583	0
17:15 - 17:30	5	0	1	6	18	1	46	65	48	317	8	373	1	130	21	152	596	0
17:30 - 17:45	5	1	0	6	27	0	44	71	68	313	6	387	1	137	20	158	622	3
17:45 - 18:00	3	1	1	5	20	4	56	80	46	261	13	320	0	117	18	135	540	0
18:00 - 18:15	5	1	1	7	24	2	53	79	38	243	5	286	3	106	12	121	493	0
18:15 - 18:30	7	0	2	9	24	1	50	75	45	231	9	285	3	96	12	111	480	1
18:30 - 18:45	2	1	2	5	17	3	35	55	61	192	6	259	1	59	10	70	389	0
18:45 - 19:00	2	1	2	5	18	2	39	59	52	132	3	187	0	74	9	83	334	1
TOTAL	229	22	45	296	738	34	1968	2740	2196	7003	259	9458	34	6771	699	7504	19998	43
Trucks	2	0	3	5	9	0	30	39	18	138	7	163	2	109	7	118	325	1.6%
School Buses	0	0	0	0	0	0	0	0	0	16	0	16	0	4	0	4	20	0.1%

TOTAL AND PEAK HOUR VOLUME DIAGRAMS

Bush River Rd AT Zimalcrest-Walmart Date: 11/29/2016

12.0 HOUR TOTAL VOLUME
FROM 7:00 TO 15:00

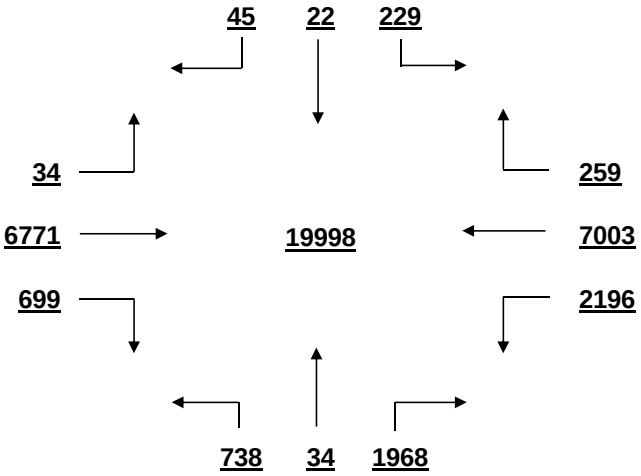

OVERALL PEAK HOUR VOLUME
FROM 17:00 TO 18:00

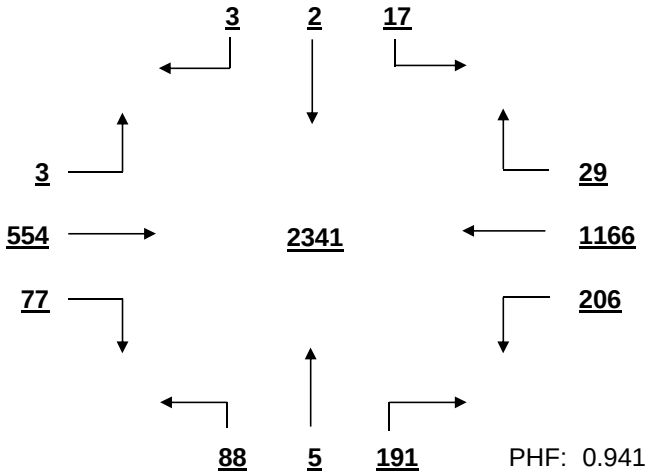

PHF: 0.941

AM PEAK HOUR VOLUME (0:00-10:45)
FROM 7:30 TO 8:30

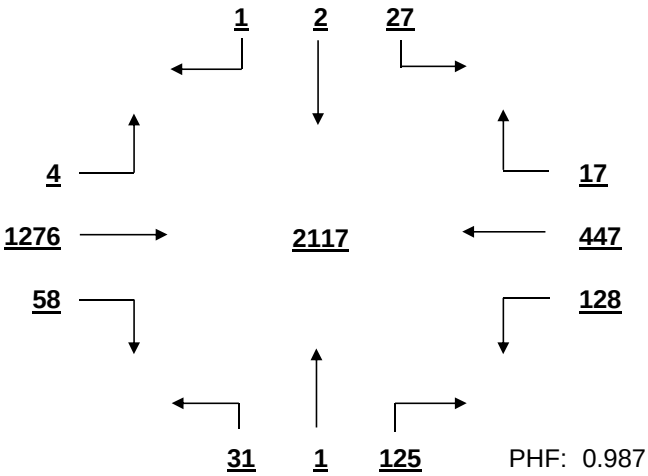

PHF: 0.987

PM PEAK HOUR VOLUME (14:15-23:45)
FROM 17:00 TO 18:00

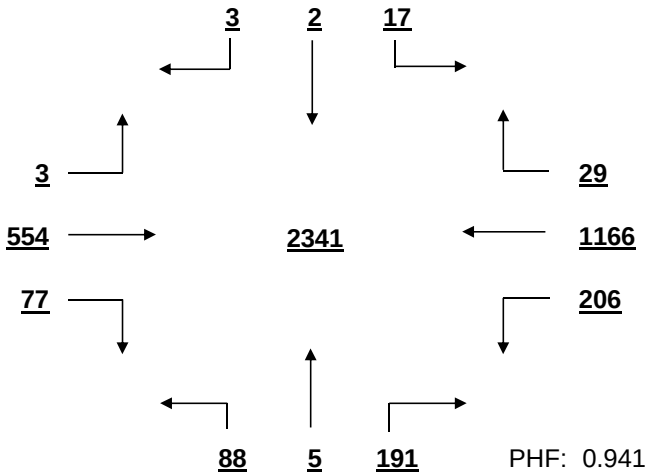

PHF: 0.941

MID-DAY PEAK HOUR VOLUME (11:00-14:00)
FROM 12:15 TO 13:15

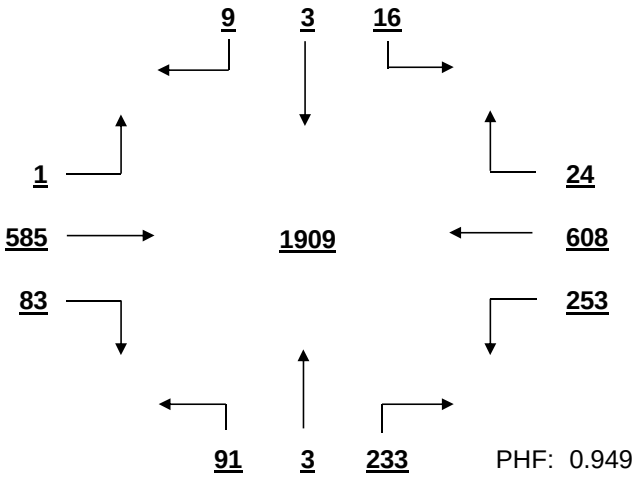

PHF: 0.949

OTHER HOUR VOLUME
FROM 7:00 TO 8:00

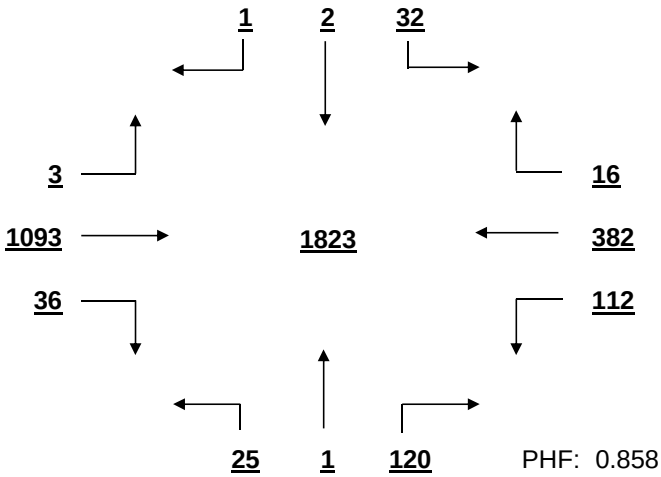

PHF: 0.858

SIGNAL WARRANT ANALYSIS

Bush River Rd AT Zimalcrest-Walmart Date: 11/29/2016

Minor Street Volume, percent of total = 15.2%
Percent of Left Turns from Minor Street = 31.9%
Percent of Right Turns from Minor Street = 66.3%
Percent of Minor Street Right Turns to Remove from Warrant Analysis = 0%
WARRANT BASIS = **100%**

Warrant No. 1 - Vehicular Volume is met

Condition A - Minimum Vehicular Volume is met

Average Major Street % of Warrant				Average Minor Street % of Warrant			
1413.5	/	600	= 236%	228.3	/	150	= 152%

Hourly percent of warrant

	7:00 - 8:00	8:00 - 9:00	9:00 - 10:00	10:00 - 11:00	11:00 - 12:00	12:00 - 13:00	13:00 - 14:00	14:00 - 15:00	15:00 - 16:00	16:00 - 17:00	17:00 - 18:00	18:00 - 19:00
Major St.	274%	276%	160%	157%	196%	255%	245%	201%	213%	277%	339%	234%
Minor St.	97%	101%	94%	95%	150%	207%	209%	159%	158%	189%	189%	179%

Condition B - Interruption to Continuous Traffic is met

Average Major Street % of Warrant				Average Minor Street % of Warrant			
1413.5	/	900	= 157%	228.3	/	75	= 304%

Hourly percent of warrant

	7:00 - 8:00	8:00 - 9:00	9:00 - 10:00	10:00 - 11:00	11:00 - 12:00	12:00 - 13:00	13:00 - 14:00	14:00 - 15:00	15:00 - 16:00	16:00 - 17:00	17:00 - 18:00	18:00 - 19:00
Major St.	182%	184%	107%	105%	131%	170%	163%	134%	142%	185%	226%	156%
Minor St.	195%	203%	188%	189%	300%	413%	417%	319%	316%	377%	379%	357%

80% Combination of Conditions A & B is met

Warrant No. 2 - Four Hour Vehicular Volume is met

Hourly percent of warrant

	7:00 - 8:00	8:00 - 9:00	9:00 - 10:00	10:00 - 11:00	11:00 - 12:00	12:00 - 13:00	13:00 - 14:00	14:00 - 15:00	15:00 - 16:00	16:00 - 17:00	17:00 - 18:00	18:00 - 19:00
Minor St.	183%	190%	92%	89%	210%	388%	391%	233%	252%	354%	355%	335%

Warrant No. 3 - Peak Hour is met

	Percent of warrant		Percent of warrant
Overall Peak Hour:	17:00 - 18:00	Higher Volume Side Street Peak Hour:	12:15 - 13:15
Minor St.	284%	Minor St.	256%

Warrant No. 4 - Pedestrian Volume. Pedestrian volume shown are minumum volumes assuming heavy major street traffic. If these volumes are met, warrant 4 requires further engineering analysis

Minimum 4 hour ped. volume crossing major street: 107

Minimum peak hour ped. volume crossing major street: 133

Number of pedestrians crossing major street

	7:00 - 8:00	8:00 - 9:00	9:00 - 10:00	10:00 - 11:00	11:00 - 12:00	12:00 - 13:00	13:00 - 14:00	14:00 - 15:00	15:00 - 16:00	16:00 - 17:00	17:00 - 18:00	18:00 - 19:00
Major St.	2	4	2	4	1	3	1	5	2	0	2	2

Warrant No. 7 - Crash Experience (Requires 3 criteria analysis by engineering)

Total Number: 0 From: 1/1/2005 to 1/1/2008

Accident Rate: 0.00 per million entering vehicles

Types of Accidents	No.	/	Avg.		No.	/	Avg.
Right Angle	0	/	0.0	Rear End	0	/	0.0
Lost Control	0	/	0.0	Side Swipe	0	/	0.0
Left Turn	0	/	0.0	Other	0	/	0.0

SOUTH CAROLINA DEPARTMENT OF TRANSPORTATION
DISTRICT 1
TRAFFIC ENGINEERING

County: Richland City: Columbia Date: 12/1/2016

Major Rt: Morning Hill Dr * Not on State System Minor Rt: Burnette Dr Clear

Day of Week: Thursday Weather: Clear Office: Short Counts JMS

Type of Control: Stop Sign Speed Limit (major st) 35

Direction of Minor Street: E-W Intersection ADT - 10850 (Calc)

Number of Lanes (major st)* 1 Number of Lanes (minor st)* 1

* Each Direction

INTERSECTION VOLUME SUMMARY

	From N Morning Hill Dr				From S Morning Hill Dr				From E Burnette Dr				From W Burnette Dr				Total	Total
	LT	STR	RT	TOT	LT	STR	RT	TOT	LT	STR	RT	TOT	LT	STR	RT	TOT	Vol	Peds
7:00 - 7:15	0	7	3	10	46	3	0	49	0	0	0	0	0	0	46	46	105	1
7:15 - 7:30	0	11	6	17	53	2	0	55	0	0	0	0	4	0	0	4	76	0
7:30 - 7:45	0	14	5	19	55	5	0	60	0	0	0	0	6	0	123	129	208	0
7:45 - 8:00	0	17	4	21	84	5	0	89	0	0	0	0	2	0	124	126	236	0
8:00 - 8:15	0	17	4	21	88	4	0	92	0	0	0	0	1	0	107	108	221	0
8:15 - 8:30	0	11	0	11	85	7	0	92	0	0	0	0	3	0	115	118	221	1
8:30 - 8:45	0	5	6	11	65	2	0	67	0	0	0	0	4	0	98	102	180	0
8:45 - 9:00	0	8	9	17	52	3	0	55	0	0	0	0	2	0	66	68	140	0
9:00 - 9:15	0	4	4	8	44	1	0	45	0	0	0	0	1	0	47	48	101	0
9:15 - 9:30	0	6	3	9	41	4	0	45	0	0	0	0	2	0	33	35	89	0
9:30 - 9:45	0	7	4	11	50	4	0	54	0	0	0	0	0	0	40	40	105	0
9:45 - 10:00	0	3	2	5	42	5	0	47	0	0	0	0	0	0	43	43	95	0
10:00 - 10:15	0	8	1	9	0	4	0	4	0	0	0	0	5	0	28	33	46	0
10:15 - 10:30	0	9	3	12	38	5	0	43	0	0	0	0	2	0	43	45	100	0
10:30 - 10:45	0	6	4	10	37	7	0	44	0	0	0	0	2	0	34	36	90	0
10:45 - 11:00	0	1	5	6	34	2	0	36	0	0	0	0	3	0	44	47	89	0
11:00 - 11:15	0	7	2	9	35	6	0	41	0	0	0	0	3	0	39	42	92	0
11:15 - 11:30	0	3	0	3	47	4	0	51	0	0	0	0	1	0	45	46	100	0
11:30 - 11:45	0	7	2	9	45	5	0	50	0	0	0	0	4	0	57	61	120	1
11:45 - 12:00	0	7	3	10	59	8	0	67	0	0	0	0	4	0	63	67	144	0
12:00 - 12:15	0	5	3	8	67	11	0	78	0	0	0	0	4	0	73	77	163	0
12:15 - 12:30	0	2	2	4	62	8	0	70	0	0	0	0	4	0	71	75	149	0
12:30 - 12:45	0	5	5	10	61	7	0	68	0	0	0	0	6	0	81	87	165	0
12:45 - 13:00	0	8	7	15	73	6	0	79	0	0	0	0	2	0	70	72	166	0
13:00 - 13:15	0	7	9	16	67	7	0	74	0	0	0	0	2	0	56	58	148	0
13:15 - 13:30	0	5	6	11	62	5	0	67	0	0	0	0	3	0	58	61	139	0
13:30 - 13:45	0	5	6	11	61	9	0	70	0	0	0	0	0	0	66	66	147	1
13:45 - 14:00	0	6	3	9	60	6	0	66	0	0	0	0	3	0	47	50	125	1
14:00 - 14:15	0	4	6	10	54	4	0	58	0	0	0	0	4	0	62	66	134	0
14:15 - 14:30	0	6	5	11	76	10	0	86	0	0	0	0	3	0	0	3	100	1
14:30 - 14:45	0	9	5	14	60	7	0	67	0	0	0	0	6	0	46	52	133	1
14:45 - 15:00	0	8	7	15	54	9	0	63	0	0	0	0	3	0	71	74	152	0
15:00 - 15:15	0	5	6	11	63	7	0	70	0	0	0	0	2	0	62	64	145	1
15:15 - 15:30	0	0	0	0	73	9	0	82	0	0	0	0	6	0	58	64	146	1
15:30 - 15:45	0	4	4	8	84	5	0	89	0	0	0	0	4	0	57	61	158	0
15:45 - 16:00	0	6	7	13	87	5	0	92	0	0	0	0	5	0	56	61	166	0
16:00 - 16:15	0	7	7	14	75	9	0	84	0	0	0	0	3	0	77	80	178	0
16:15 - 16:30	0	9	8	17	99	6	0	105	0	0	0	0	4	0	65	69	191	0
16:30 - 16:45	0	13	18	31	137	6	0	143	0	0	0	0	1	0	99	100	274	0
16:45 - 17:00	0	7	13	20	139	6	0	145	0	0	0	0	4	0	70	74	239	1
17:00 - 17:15	0	4	12	16	130	9	0	139	0	0	0	0	0	0	100	100	255	0
17:15 - 17:30	0	27	34	61	144	7	0	151	0	0	0	0	4	0	47	51	263	0
17:30 - 17:45	0	28	36	64	157	9	0	166	0	0	0	0	3	0	83	86	316	0
17:45 - 18:00	0	7	27	34	154	4	0	158	0	0	0	0	2	0	57	59	251	0
18:00 - 18:15	0	11	23	34	123	4	0	127	0	0	0	0	4	0	50	54	215	0
18:15 - 18:30	0	0	10	10	110	6	0	116	0	0	0	0	1	0	45	46	172	1
18:30 - 18:45	0	5	9	14	90	14	0	104	0	0	0	0	4	0	41	45	163	0
18:45 - 19:00	0	7	4	11	72	9	0	81	0	0	0	0	3	0	34	37	129	0
TOTAL	0	368	352	720	3494	290	0	3784	0	0	0	0	139	0	2897	3036	7540	11
Trucks	0	2	1	3	16	1	0	17	0	0	0	0	2	0	14	16	36	0.5%
School Buses	0	3	0	3	14	0	0	14	0	0	0	0	0	0	23	23	40	0.5%

TOTAL AND PEAK HOUR VOLUME DIAGRAMS

Morning Hill Dr AT Burnette Dr Date: 12/1/2016

12.0 HOUR TOTAL VOLUME
FROM 7:00 TO 15:00

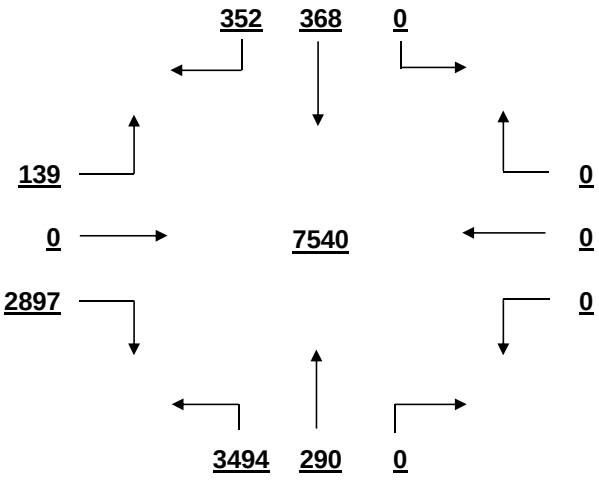

OVERALL PEAK HOUR VOLUME
FROM 17:00 TO 18:00

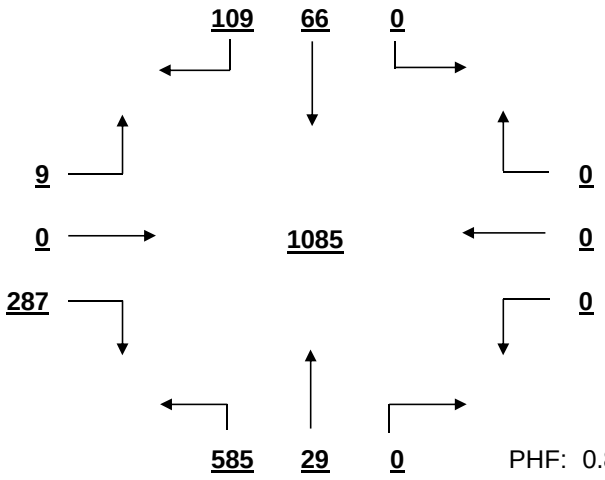

PHF: 0.858

AM PEAK HOUR VOLUME (0:00-10:45)
FROM 7:30 TO 8:30

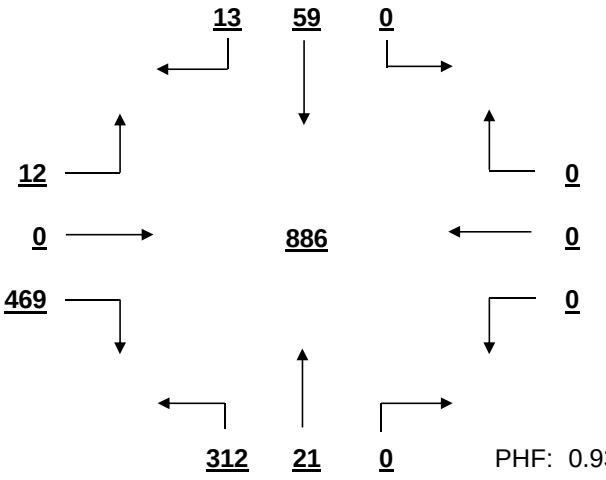

PHF: 0.939

PM PEAK HOUR VOLUME (14:15-23:45)
FROM 17:00 TO 18:00

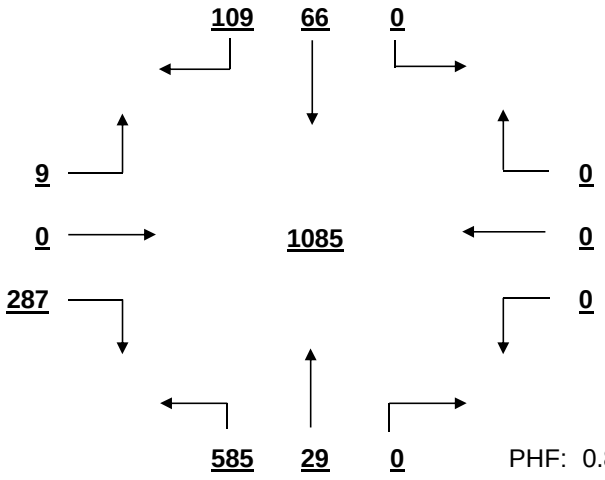

PHF: 0.858

MID-DAY PEAK HOUR VOLUME (11:00-14:00)
FROM 12:00 TO 13:00

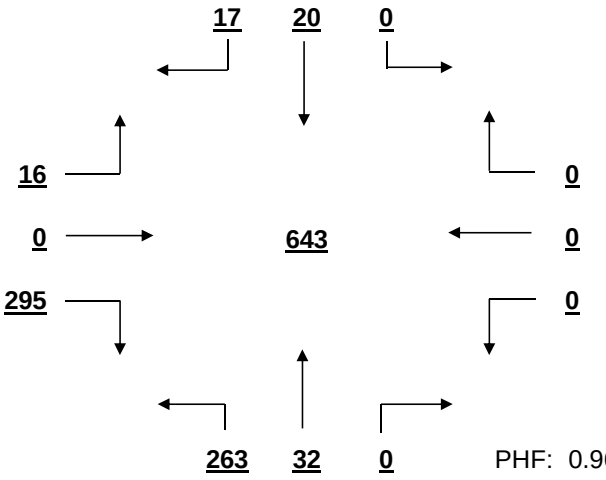

PHF: 0.968

OTHER HOUR VOLUME
FROM 7:00 TO 8:00

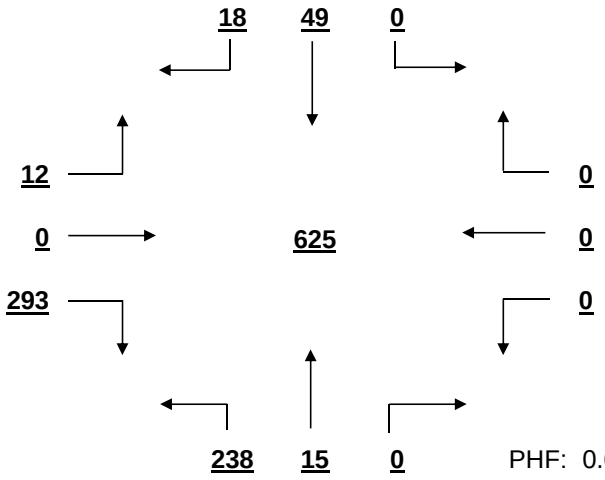

PHF: 0.662

SIGNAL WARRANT ANALYSIS

Morning Hill Dr AT Burnette Dr Date: 12/1/2016

Minor Street Volume, percent of total = 40.3%
Percent of Left Turns from Minor Street = 4.6%
Percent of Right Turns from Minor Street = 95.4%
Percent of Minor Street Right Turns to Remove from Warrant Analysis = 0%
WARRANT BASIS = **100%**

Warrant No. 1 - Vehicular Volume is not met

Condition A - Minimum Vehicular Volume is not met

Average Major Street % of Warrant				Average Minor Street % of Warrant			
375.3	/ 500	=	75%	253.0	/ 150	=	169%

Hourly percent of warrant

	7:00 - 8:00	8:00 - 9:00	9:00 - 10:00	10:00 - 11:00	11:00 - 12:00	12:00 - 13:00	13:00 - 14:00	14:00 - 15:00	15:00 - 16:00	16:00 - 17:00	17:00 - 18:00	18:00 - 19:00
Major St.	64%	73%	45%	33%	48%	66%	65%	65%	73%	112%	158%	99%
Minor St.	203%	264%	111%	107%	144%	207%	157%	130%	167%	215%	197%	121%

Condition B - Interruption to Continuous Traffic is not met

Average Major Street % of Warrant				Average Minor Street % of Warrant			
375.3	/ 750	=	50%	253.0	/ 75	=	337%

Hourly percent of warrant

	7:00 - 8:00	8:00 - 9:00	9:00 - 10:00	10:00 - 11:00	11:00 - 12:00	12:00 - 13:00	13:00 - 14:00	14:00 - 15:00	15:00 - 16:00	16:00 - 17:00	17:00 - 18:00	18:00 - 19:00
Major St.	43%	49%	30%	22%	32%	44%	43%	43%	49%	75%	105%	66%
Minor St.	407%	528%	221%	215%	288%	415%	313%	260%	333%	431%	395%	243%

80% Combination of Conditions A & B is not met

Warrant No. 2 - Four Hour Vehicular Volume is not met

Hourly percent of warrant

	7:00 - 8:00	8:00 - 9:00	9:00 - 10:00	10:00 - 11:00	11:00 - 12:00	12:00 - 13:00	13:00 - 14:00	14:00 - 15:00	15:00 - 16:00	16:00 - 17:00	17:00 - 18:00	18:00 - 19:00
Minor St.	88%	122%	41%	37%	55%	91%	68%	56%	77%	137%	194%	69%

Warrant No. 3 - Peak Hour is met

	Percent of warrant		Percent of warrant
Overall Peak Hour:	17:00 - 18:00	Higher Volume Side Street Peak Hour:	7:30 - 8:30
Minor St.	105%	Minor St.	100%

Warrant No. 4 - Pedestrian Volume. Pedestrian volume shown are minumum volumes assuming heavy major street traffic. If these volumes are met, warrant 4 requires further engineering analysis

Minimum 4 hour ped. volume crossing major street: 107

Minimum peak hour ped. volume crossing major street: 133

Number of pedestrians crossing major street

	7:00 - 8:00	8:00 - 9:00	9:00 - 10:00	10:00 - 11:00	11:00 - 12:00	12:00 - 13:00	13:00 - 14:00	14:00 - 15:00	15:00 - 16:00	16:00 - 17:00	17:00 - 18:00	18:00 - 19:00
Major St.	1	1	0	0	0	0	1	2	1	0	0	1

Warrant No. 7 - Crash Experience (Requires 3 criteria analysis by engineering)

Total Number: 0 From: 1/1/2005 to 1/1/2008
Accident Rate: 0.00 per million entering vehicles

Types of Accidents	No.	/	Avg.		No.	/	Avg.
Right Angle	0	/	0.0	Rear End	0	/	0.0
Lost Control	0	/	0.0	Side Swipe	0	/	0.0
Left Turn	0	/	0.0	Other	0	/	0.0

SOUTH CAROLINA DEPARTMENT OF TRANSPORTATION
DISTRICT 1
TRAFFIC ENGINEERING

County: Richland City: Columbia Date: 11/29/2016

Major Rt: Bush River Rd * Not on State System Minor Rt: Arrowwood Rd Clear

Day of Week: Tuesday Weather: Rain Office: Short Counts JMS

Type of Control: Signal Speed Limit (major st) 40

Direction of Minor Street: N-S Intersection ADT - 29680 (Calc)

Number of Lanes (major st)* 2 Number of Lanes (minor st)* 2

* Each Direction

INTERSECTION VOLUME SUMMARY

	From N Arrowwood Rd				From S Arrowwood Rd				From E Bush River Rd				From W Bush River Rd				Total	Total
	LT	STR	RT	TOT	LT	STR	RT	TOT	LT	STR	RT	TOT	LT	STR	RT	TOT	Vol	Peds
7:00 - 7:15	6	2	34	42	10	0	26	36	0	73	1	74	26	199	22	247	399	0
7:15 - 7:30	7	8	36	51	32	1	49	82	0	92	7	99	43	310	0	353	585	0
7:30 - 7:45	12	5	44	61	37	0	66	103	1	99	12	112	63	340	31	434	710	1
7:45 - 8:00	17	2	33	52	20	0	42	62	1	105	12	118	60	0	44	104	336	0
8:00 - 8:15	12	9	34	55	15	0	34	49	1	98	12	111	51	332	36	419	634	0
8:15 - 8:30	9	5	0	14	15	0	38	53	3	125	11	139	70	354	33	457	663	0
8:30 - 8:45	6	6	36	48	10	0	16	26	1	103	10	114	50	270	26	346	534	0
8:45 - 9:00	14	6	42	62	17	0	21	38	3	87	18	108	47	227	18	292	500	0
9:00 - 9:15	10	3	34	47	8	5	1	14	3	85	12	100	37	179	11	227	388	0
9:15 - 9:30	10	5	36	51	9	1	2	12	1	78	10	89	42	129	13	184	336	0
9:30 - 9:45	13	4	32	49	8	3	4	15	0	95	10	105	36	126	11	173	342	0
9:45 - 10:00	11	4	34	49	9	4	4	17	2	84	10	96	41	141	16	198	360	0
10:00 - 10:15	9	3	35	47	0	5	0	5	6	97	7	110	45	138	8	191	353	0
10:15 - 10:30	19	1	33	53	5	6	6	17	3	99	11	113	27	118	10	155	338	0
10:30 - 10:45	11	2	36	49	12	2	1	15	5	133	7	145	51	132	5	188	397	0
10:45 - 11:00	11	3	44	58	11	3	1	15	8	105	9	122	47	131	9	187	382	0
11:00 - 11:15	15	3	40	58	12	7	10	29	5	108	10	123	35	140	12	187	397	0
11:15 - 11:30	15	3	56	74	17	2	11	30	4	111	9	124	40	146	9	195	423	2
11:30 - 11:45	7	4	46	57	17	6	7	30	5	164	16	185	39	172	10	221	493	0
11:45 - 12:00	16	6	55	77	19	13	10	42	9	140	17	166	52	187	19	258	543	1
12:00 - 12:15	22	13	78	113	16	14	15	45	12	208	14	234	64	187	16	267	659	2
12:15 - 12:30	21	14	63	98	28	20	15	63	13	181	16	210	66	0	17	83	454	0
12:30 - 12:45	14	9	54	77	23	9	15	47	8	175	13	196	63	193	14	270	590	2
12:45 - 13:00	18	8	76	102	24	15	13	52	12	187	19	218	63	192	12	267	639	2
13:00 - 13:15	11	7	66	84	12	6	13	31	10	194	19	223	56	175	11	242	580	1
13:15 - 13:30	23	7	71	101	24	7	13	44	12	165	10	187	43	208	16	267	599	1
13:30 - 13:45	16	8	61	85	32	5	13	50	10	166	13	189	47	175	11	233	557	0
13:45 - 14:00	24	14	53	91	23	10	11	44	4	153	16	173	45	173	10	228	536	0
14:00 - 14:15	12	7	57	76	17	3	10	30	2	153	10	165	42	149	10	201	472	0
14:15 - 14:30	21	3	62	86	14	8	6	28	8	153	8	169	41	164	0	205	488	0
14:30 - 14:45	7	5	48	60	21	6	12	39	8	185	8	201	39	151	9	199	499	0
14:45 - 15:00	21	7	57	85	15	4	10	29	6	132	10	148	48	153	10	211	473	0
15:00 - 15:15	6	3	47	56	20	5	5	30	11	187	10	208	38	154	8	200	494	1
15:15 - 15:30	11	0	57	68	15	6	3	24	6	148	11	165	39	173	11	223	480	0
15:30 - 15:45	10	4	59	73	14	5	4	23	1	192	8	201	49	156	9	214	511	1
15:45 - 16:00	11	2	45	58	15	9	5	29	5	156	9	170	59	172	11	242	499	0
16:00 - 16:15	10	3	48	61	27	2	2	31	2	230	12	244	48	186	11	245	581	0
16:15 - 16:30	7	4	59	70	28	7	4	39	13	221	13	247	48	192	8	248	604	1
16:30 - 16:45	10	12	73	95	42	10	14	66	11	275	10	296	74	188	15	277	734	0
16:45 - 17:00	7	6	43	56	40	11	14	65	5	289	10	304	66	161	13	240	665	0
17:00 - 17:15	12	7	82	101	34	21	4	59	3	300	11	314	58	187	11	256	730	0
17:15 - 17:30	12	5	75	92	55	33	3	91	4	326	8	338	57	203	11	271	792	0
17:30 - 17:45	11	5	70	86	52	19	12	83	4	364	13	381	51	174	6	231	781	0
17:45 - 18:00	10	3	57	70	38	9	5	52	7	217	10	234	56	160	6	222	578	0
18:00 - 18:15	8	3	50	61	34	6	4	44	3	269	2	274	49	156	13	218	597	0
18:15 - 18:30	5	0	46	51	20	9	7	36	9	222	8	239	57	143	6	206	532	0
18:30 - 18:45	7	2	52	61	19	5	10	34	1	191	5	197	64	109	4	177	469	0
18:45 - 19:00	6	5	48	59	18	5	7	30	3	185	7	195	42	123	6	171	455	0
TOTAL	583	250	2397	3230	1003	327	598	1928	254	7905	514	8673	2374	8328	628	11330	25161	15
Trucks	8	2	28	38	12	2	9	23	4	86	12	102	15	89	9	113	276	1.1%
School Buses	24	1	1	26	4	1	2	7	0	17	13	30	1	22	0	23	86	0.3%

TOTAL AND PEAK HOUR VOLUME DIAGRAMS

Bush River Rd AT Arrowwood Rd Date: 11/29/2016

12.0 HOUR TOTAL VOLUME
FROM 7:00 TO 15:00

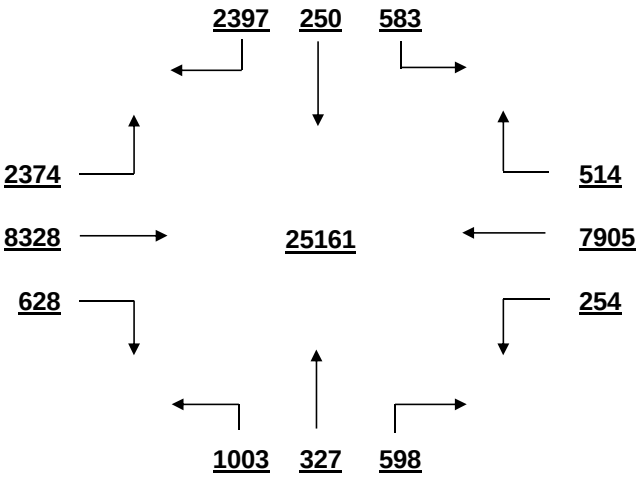

OVERALL PEAK HOUR VOLUME
FROM 16:45 TO 17:45

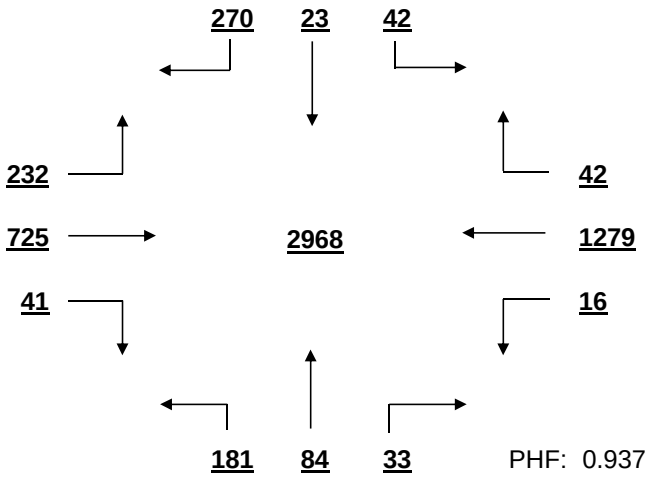

PHF: 0.937

AM PEAK HOUR VOLUME (0:00-10:45)
FROM 7:30 TO 8:30

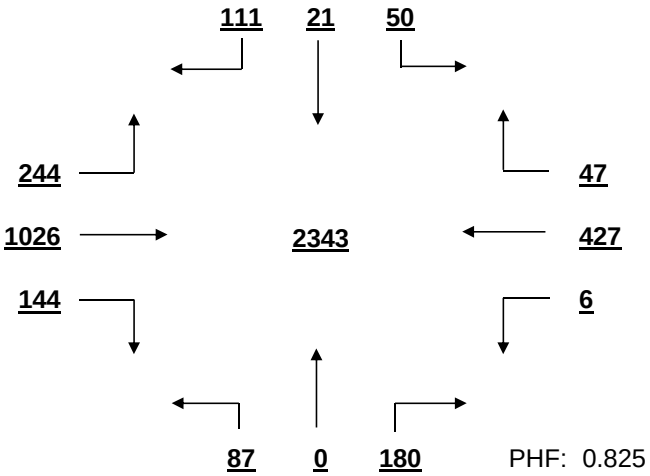

PHF: 0.825

PM PEAK HOUR VOLUME (14:15-23:45)
FROM 16:45 TO 17:45

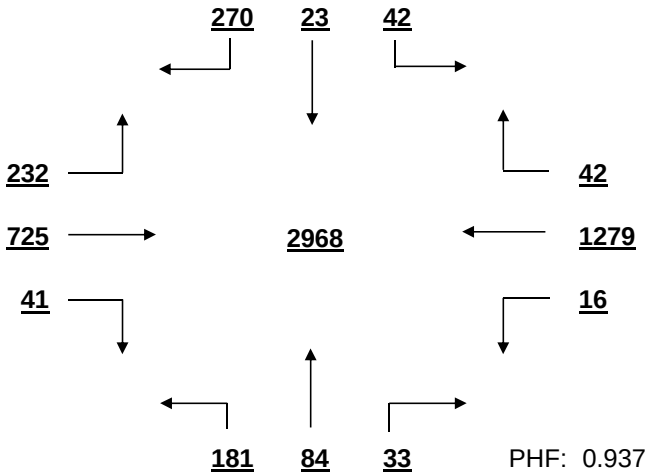

PHF: 0.937

MID-DAY PEAK HOUR VOLUME (11:00-14:00)
FROM 12:30 TO 13:30

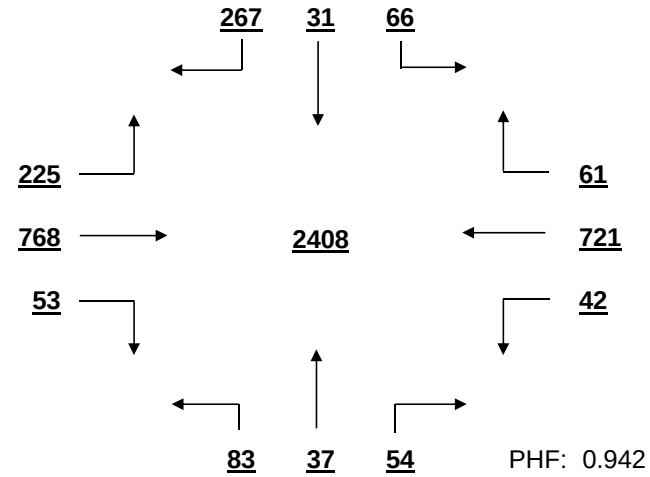

PHF: 0.942

OTHER HOUR VOLUME
FROM 7:00 TO 8:00

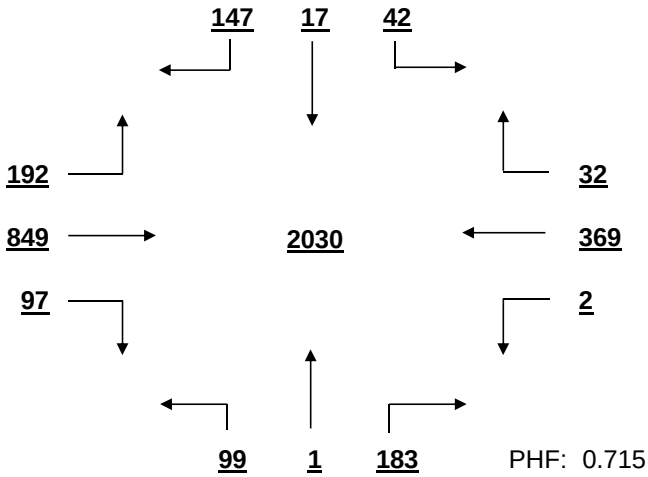

PHF: 0.715

SIGNAL WARRANT ANALYSIS

Bush River Rd AT Arrowwood Rd Date: 11/29/2016

Minor Street Volume, percent of total = 20.5%
Percent of Left Turns from Minor Street = 30.7%
Percent of Right Turns from Minor Street = 58.1%
Percent of Minor Street Right Turns to Remove from Warrant Analysis = 0%
WARRANT BASIS = **100%**

Warrant No. 1 - Vehicular Volume is met

Condition A - Minimum Vehicular Volume is met

Average Major Street % of Warrant				Average Minor Street % of Warrant			
1666.9	/ 600	=	278%	269.2	/ 200	=	135%

Hourly percent of warrant

	7:00 - 8:00	8:00 - 9:00	9:00 - 10:00	10:00 - 11:00	11:00 - 12:00	12:00 - 13:00	13:00 - 14:00	14:00 - 15:00	15:00 - 16:00	16:00 - 17:00	17:00 - 18:00	18:00 - 19:00
Major St.	257%	331%	195%	202%	243%	291%	290%	250%	271%	350%	375%	280%
Minor St.	142%	90%	98%	104%	133%	195%	181%	154%	128%	141%	175%	116%

Condition B - Interruption to Continuous Traffic is met

Average Major Street % of Warrant				Average Minor Street % of Warrant			
1666.9	/ 900	=	185%	269.2	/ 100	=	269%

Hourly percent of warrant

	7:00 - 8:00	8:00 - 9:00	9:00 - 10:00	10:00 - 11:00	11:00 - 12:00	12:00 - 13:00	13:00 - 14:00	14:00 - 15:00	15:00 - 16:00	16:00 - 17:00	17:00 - 18:00	18:00 - 19:00
Major St.	171%	221%	130%	135%	162%	194%	194%	167%	180%	233%	250%	186%
Minor St.	283%	179%	196%	207%	266%	390%	361%	307%	255%	282%	349%	232%

80% Combination of Conditions A & B is met

Warrant No. 2 - Four Hour Vehicular Volume is met

Hourly percent of warrant

	7:00 - 8:00	8:00 - 9:00	9:00 - 10:00	10:00 - 11:00	11:00 - 12:00	12:00 - 13:00	13:00 - 14:00	14:00 - 15:00	15:00 - 16:00	16:00 - 17:00	17:00 - 18:00	18:00 - 19:00
Minor St.	246%	156%	139%	158%	231%	339%	314%	267%	222%	245%	303%	202%

Warrant No. 3 - Peak Hour is met

	Percent of warrant		Percent of warrant
Overall Peak Hour:	16:45 - 17:45	Higher Volume Side Street Peak Hour:	12:00 - 13:00
Minor St.	223%	Minor St.	260%

Warrant No. 4 - Pedestrian Volume. Pedestrian volume shown are minumum volumes assuming heavy major street traffic. If these volumes are met, warrant 4 requires further engineering analysis

Minimum 4 hour ped. volume crossing major street	Minimum peak hour ped. volume crossing major street
107	133

Number of pedestrians crossing major street

	7:00 - 8:00	8:00 - 9:00	9:00 - 10:00	10:00 - 11:00	11:00 - 12:00	12:00 - 13:00	13:00 - 14:00	14:00 - 15:00	15:00 - 16:00	16:00 - 17:00	17:00 - 18:00	18:00 - 19:00
Major St.	0	0	0	0	0	1	0	0	0	0	0	0

Warrant No. 7 - Crash Experience (Requires 3 criteria analysis by engineering)

Total Number: 0 From: 1/1/2005 to 1/1/2008
Accident Rate: 0.00 per million entering vehicles

Types of Accidents	No.	/	Avg.		No.	/	Avg.
Right Angle	0	/	0.0	Rear End	0	/	0.0
Lost Control	0	/	0.0	Side Swipe	0	/	0.0
Left Turn	0	/	0.0	Other	0	/	0.0

SOUTH CAROLINA DEPARTMENT OF TRANSPORTATION
DISTRICT 1
TRAFFIC ENGINEERING

County: Richland City: Columbia Date: 11/29/2016

Major Rt: Bush River Rd * Not on State System Minor Rt: Colonial Life Blvd-Mall Clear

Day of Week: Tuesday Weather: Rain Office: Short Counts JMS

Type of Control: Signal Speed Limit (major st) 40

Direction of Minor Street: N-S Intersection ADT - 24450 (Calc)

Number of Lanes (major st)* 2 Number of Lanes (minor st)* 2

* Each Direction

INTERSECTION VOLUME SUMMARY

	From N Colonial Life Blvd				From S Colonial Life Blvd				From E Bush River Rd				From W Bush River Rd				Total	Total
	LT	STR	RT	TOT	LT	STR	RT	TOT	LT	STR	RT	TOT	LT	STR	RT	TOT	Vol	Peds
7:00 - 7:15	2	5	1	8	21	2	4	27	16	61	0	77	1	114	86	201	313	0
7:15 - 7:30	1	4	0	5	24	2	8	34	20	79	0	99	3	162	0	165	303	0
7:30 - 7:45	2	7	0	9	24	3	8	35	9	91	1	101	2	174	161	337	482	0
7:45 - 8:00	0	7	5	12	23	5	8	36	16	108	2	126	3	0	184	187	361	0
8:00 - 8:15	1	8	4	13	40	8	10	58	16	78	5	99	3	149	169	321	491	0
8:15 - 8:30	2	3	0	5	35	6	6	47	16	95	3	114	6	191	168	365	531	0
8:30 - 8:45	2	6	1	9	32	5	16	53	19	91	5	115	3	143	123	269	446	0
8:45 - 9:00	0	0	2	2	31	2	14	47	24	76	0	100	10	115	116	241	390	1
9:00 - 9:15	3	1	2	6	35	3	10	48	11	64	2	77	5	98	76	179	310	1
9:15 - 9:30	3	2	3	8	21	3	9	33	8	69	5	82	10	95	37	142	265	0
9:30 - 9:45	3	3	4	10	24	5	10	39	10	80	1	91	6	67	37	110	250	0
9:45 - 10:00	0	3	4	7	28	3	11	42	12	72	0	84	7	103	48	158	291	0
10:00 - 10:15	2	3	6	11	0	3	0	3	2	79	1	82	16	108	33	157	253	0
10:15 - 10:30	3	3	8	14	34	4	19	57	7	84	3	94	11	96	41	148	313	1
10:30 - 10:45	2	6	12	20	43	5	12	60	11	85	0	96	12	80	44	136	312	0
10:45 - 11:00	3	2	8	13	34	7	15	56	10	77	4	91	19	88	44	151	311	0
11:00 - 11:15	6	4	9	19	33	9	18	60	8	87	2	97	18	94	45	157	333	0
11:15 - 11:30	3	4	12	19	39	6	24	69	9	88	3	100	15	116	45	176	364	0
11:30 - 11:45	3	8	6	17	74	13	32	119	15	104	4	123	18	116	50	184	443	0
11:45 - 12:00	4	3	14	21	66	8	27	101	16	100	2	118	23	131	62	216	456	2
12:00 - 12:15	4	3	13	20	92	12	39	143	8	123	1	132	21	151	55	227	522	2
12:15 - 12:30	2	9	10	21	57	10	26	93	27	143	6	176	34	0	57	91	381	0
12:30 - 12:45	7	8	21	36	67	17	26	110	32	111	4	147	17	130	70	217	510	1
12:45 - 13:00	7	10	18	35	71	12	30	113	21	137	5	163	21	133	65	219	530	1
13:00 - 13:15	7	5	15	27	79	12	35	126	21	125	4	150	13	141	51	205	508	0
13:15 - 13:30	3	7	14	24	59	10	37	106	14	125	2	141	23	155	71	249	520	0
13:30 - 13:45	8	4	16	28	54	11	26	91	20	110	5	135	20	124	49	193	447	2
13:45 - 14:00	9	10	36	55	50	8	22	80	22	118	8	148	14	143	51	208	491	1
14:00 - 14:15	10	8	14	32	49	10	19	78	23	97	4	124	9	116	40	165	399	0
14:15 - 14:30	6	10	17	33	38	13	13	64	19	119	2	140	12	131	0	143	380	0
14:30 - 14:45	6	5	16	27	61	6	32	99	9	121	5	135	17	111	34	162	423	0
14:45 - 15:00	5	6	11	22	45	10	19	74	9	106	4	119	12	138	36	186	401	0
15:00 - 15:15	3	5	8	16	57	10	23	90	16	124	4	144	12	123	29	164	414	0
15:15 - 15:30	6	0	11	17	59	9	20	88	8	107	4	119	12	121	51	184	408	0
15:30 - 15:45	3	5	15	23	67	7	22	96	13	98	1	112	8	127	28	163	394	0
15:45 - 16:00	3	7	14	24	80	11	25	116	10	83	0	93	11	143	36	190	423	0
16:00 - 16:15	5	2	15	22	120	10	21	151	6	141	2	149	13	139	47	199	521	0
16:15 - 16:30	9	7	6	22	104	8	23	135	10	129	6	145	18	137	52	207	509	0
16:30 - 16:45	4	8	13	25	154	19	33	206	6	132	5	143	14	143	57	214	588	0
16:45 - 17:00	6	2	9	17	183	29	37	249	8	130	4	142	14	136	31	181	589	0
17:00 - 17:15	9	13	13	35	191	29	36	256	9	108	5	122	14	135	63	212	625	0
17:15 - 17:30	5	12	15	32	168	31	28	227	7	127	7	141	17	150	53	220	620	0
17:30 - 17:45	5	11	11	27	123	28	18	169	7	170	11	188	20	142	65	227	611	0
17:45 - 18:00	8	7	13	28	79	17	17	113	9	156	10	175	8	122	45	175	491	0
18:00 - 18:15	7	2	13	22	82	14	32	128	11	160	8	179	13	130	32	175	504	0
18:15 - 18:30	3	0	7	10	64	7	19	90	2	157	5	164	13	128	25	166	430	0
18:30 - 18:45	2	2	13	17	69	4	14	87	5	101	6	112	6	99	24	129	345	0
18:45 - 19:00	0	2	16	18	87	14	16	117	3	87	6	96	12	93	30	135	366	0
TOTAL	197	252	494	943	3070	480	969	4519	610	5113	177	5900	609	5781	2816	9206	20568	12
Trucks	1	2	9	12	20	2	5	27	3	65	0	68	7	51	34	92	199	1.0%
School Buses	0	0	0	0	1	0	1	2	1	34	0	35	0	44	1	45	82	0.4%

TOTAL AND PEAK HOUR VOLUME DIAGRAMS

Bush River Rd AT Colonial Life Blvd-Mall Date: 11/29/2016

12.0 HOUR TOTAL VOLUME
FROM 7:00 TO 15:00

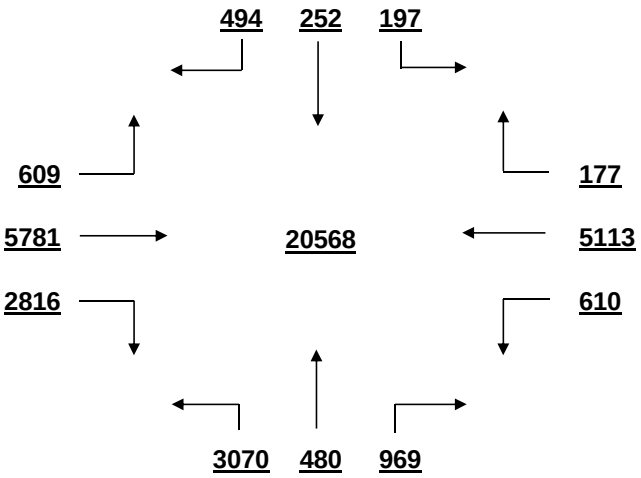

OVERALL PEAK HOUR VOLUME
FROM 16:45 TO 17:45

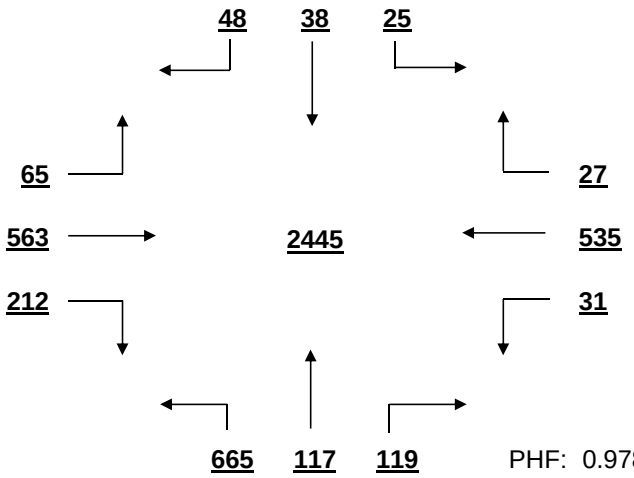

PHF: 0.978

AM PEAK HOUR VOLUME (0:00-10:45)
FROM 7:30 TO 8:30

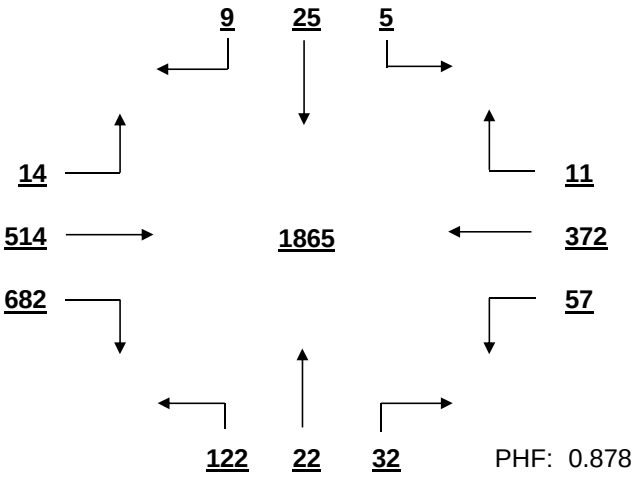

PHF: 0.878

PM PEAK HOUR VOLUME (14:15-23:45)
FROM 16:45 TO 17:45

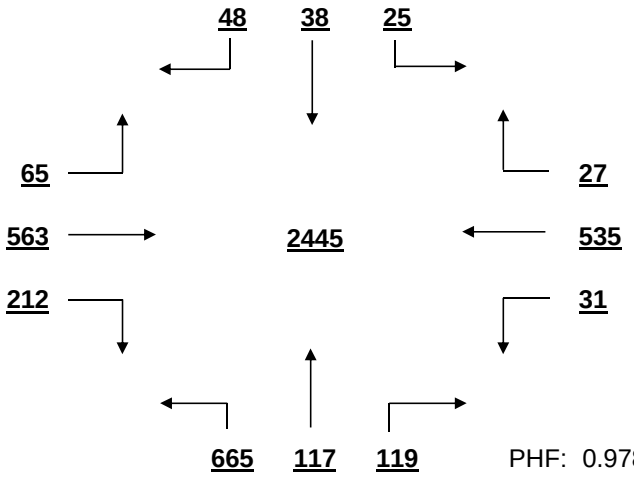

PHF: 0.978

MID-DAY PEAK HOUR VOLUME (11:00-14:00)
FROM 12:30 TO 13:30

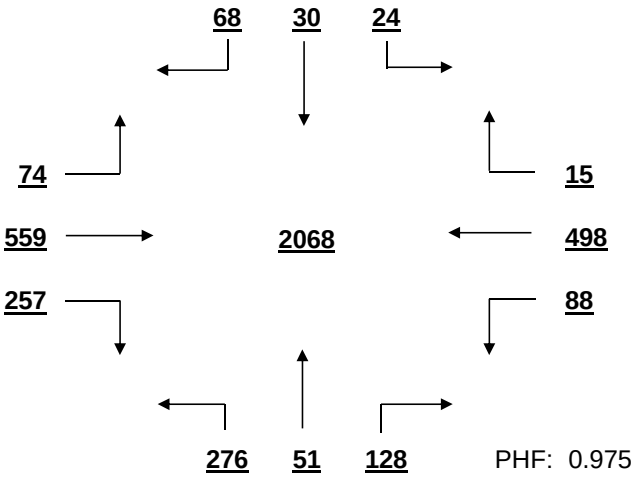

PHF: 0.975

OTHER HOUR VOLUME
FROM 7:00 TO 8:00

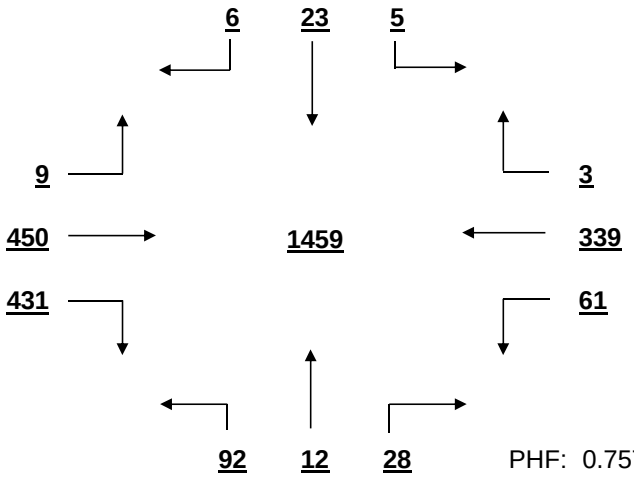

PHF: 0.757

SIGNAL WARRANT ANALYSIS

Bush River Rd AT Colonial Life Blvd-Mall Date: 11/29/2016

Minor Street Volume, percent of total = 26.6%
Percent of Left Turns from Minor Street = 59.8%
Percent of Right Turns from Minor Street = 26.8%
Percent of Minor Street Right Turns to Remove from Warrant Analysis = 0%
WARRANT BASIS = **100%**

Warrant No. 1 - Vehicular Volume is met

Condition A - Minimum Vehicular Volume is met

Average Major Street % of Warrant				Average Minor Street % of Warrant			
1258.8	/ 600	=	210%	376.6	/ 200	=	188%

Hourly percent of warrant

	7:00 - 8:00	8:00 - 9:00	9:00 - 10:00	10:00 - 11:00	11:00 - 12:00	12:00 - 13:00	13:00 - 14:00	14:00 - 15:00	15:00 - 16:00	16:00 - 17:00	17:00 - 18:00	18:00 - 19:00
Major St.	216%	271%	154%	159%	195%	229%	238%	196%	195%	230%	243%	193%
Minor St.	66%	103%	81%	88%	175%	230%	202%	158%	195%	371%	383%	211%

Condition B - Interruption to Continuous Traffic is met

Average Major Street % of Warrant				Average Minor Street % of Warrant			
1258.8	/ 900	=	140%	376.6	/ 100	=	377%

Hourly percent of warrant

	7:00 - 8:00	8:00 - 9:00	9:00 - 10:00	10:00 - 11:00	11:00 - 12:00	12:00 - 13:00	13:00 - 14:00	14:00 - 15:00	15:00 - 16:00	16:00 - 17:00	17:00 - 18:00	18:00 - 19:00
Major St.	144%	180%	103%	106%	130%	152%	159%	130%	130%	153%	162%	128%
Minor St.	132%	205%	162%	176%	349%	459%	403%	315%	390%	741%	765%	422%

80% Combination of Conditions A & B is met

Warrant No. 2 - Four Hour Vehicular Volume is met

Hourly percent of warrant

	7:00 - 8:00	8:00 - 9:00	9:00 - 10:00	10:00 - 11:00	11:00 - 12:00	12:00 - 13:00	13:00 - 14:00	14:00 - 15:00	15:00 - 16:00	16:00 - 17:00	17:00 - 18:00	18:00 - 19:00
Minor St.	116%	178%	72%	83%	248%	399%	350%	225%	276%	644%	665%	291%

Warrant No. 3 - Peak Hour is met

Percent of warrant			Percent of warrant	
Overall Peak Hour:	16:45 - 17:45	Higher Volume Side Street Peak Hour:	16:30 - 17:30	
Minor St.	435%	Minor St.	416%	

Warrant No. 4 - Pedestrian Volume. Pedestrian volume shown are minumum volumes assuming heavy major street traffic. If these volumes are met, warrant 4 requires further engineering analysis

Minimum 4 hour ped. volume crossing major street: 107

Minimum peak hour ped. volume crossing major street: 133

Number of pedestrians crossing major street

	7:00 - 8:00	8:00 - 9:00	9:00 - 10:00	10:00 - 11:00	11:00 - 12:00	12:00 - 13:00	13:00 - 14:00	14:00 - 15:00	15:00 - 16:00	16:00 - 17:00	17:00 - 18:00	18:00 - 19:00
Major St.	0	0	0	1	0	2	1	0	0	0	0	0

Warrant No. 7 - Crash Experience (Requires 3 criteria analysis by engineering)

Total Number: 0 From: 1/1/2005 to 1/1/2008

Accident Rate: 0.00 per million entering vehicles

Types of Accidents	No.	/	Avg.		No.	/	Avg.
Right Angle	0	/	0.0	Rear End	0	/	0.0
Lost Control	0	/	0.0	Side Swipe	0	/	0.0
Left Turn	0	/	0.0	Other	0	/	0.0

SOUTH CAROLINA DEPARTMENT OF TRANSPORTATION
DISTRICT 1
TRAFFIC ENGINEERING

County: Richland City: Columbia Date: 11/29/2016

Major Rt: Broad River Rd * Not on State System Minor Rt: Bush River Rd Clear

Day of Week: Tuesday Weather: Rain Office: Short Counts JMS

Type of Control: Signal Speed Limit (major st) 40

Direction of Minor Street: E-W Intersection ADT - 28070 (Calc)

Number of Lanes (major st)* 2 Number of Lanes (minor st)* 2

* Each Direction

INTERSECTION VOLUME SUMMARY

	From N Broad River Rd				From S Broad River Rd				From E Bush River Rd				From W Bush River Rd				Total	Total
	LT	STR	RT	TOT	LT	STR	RT	TOT	LT	STR	RT	TOT	LT	STR	RT	TOT	Vol	Peds
7:00 - 7:15	0	185	54	239	42	106	0	148	0	0	0	0	30	0	79	109	496	0
7:15 - 7:30	0	256	72	328	48	118	0	166	0	0	0	0	41	0	0	41	535	1
7:30 - 7:45	0	298	68	366	49	142	0	191	0	0	0	0	46	0	131	177	734	0
7:45 - 8:00	0	256	61	317	69	161	0	230	0	0	0	0	50	0	121	171	718	0
8:00 - 8:15	0	285	59	344	59	140	0	199	0	0	0	0	30	0	96	126	669	0
8:15 - 8:30	0	262	0	262	68	154	0	222	0	0	0	0	40	0	121	161	645	0
8:30 - 8:45	0	263	64	327	59	138	0	197	0	0	0	0	36	0	88	124	648	1
8:45 - 9:00	0	237	54	291	47	123	0	170	0	0	0	0	46	0	60	106	567	0
9:00 - 9:15	0	175	35	210	50	113	0	163	0	0	0	0	33	0	72	105	478	0
9:15 - 9:30	0	168	23	191	51	118	0	169	0	0	0	0	30	0	58	88	448	1
9:30 - 9:45	0	172	40	212	51	126	0	177	0	0	0	0	37	0	64	101	490	0
9:45 - 10:00	0	138	43	181	47	137	0	184	0	0	0	0	32	0	55	87	452	2
10:00 - 10:15	0	174	25	199	0	121	0	121	0	0	0	0	39	0	70	109	429	0
10:15 - 10:30	0	140	31	171	56	140	0	196	0	0	0	0	29	0	56	85	452	0
10:30 - 10:45	0	155	37	192	59	138	0	197	0	0	0	0	30	0	62	92	481	0
10:45 - 11:00	0	143	22	165	55	138	0	193	0	0	0	0	52	0	55	107	465	0
11:00 - 11:15	0	141	33	174	63	138	0	201	0	0	0	0	40	0	68	108	483	0
11:15 - 11:30	0	141	42	183	82	133	0	215	0	0	0	0	53	0	74	127	525	0
11:30 - 11:45	0	130	43	173	81	140	0	221	0	0	0	0	48	0	79	127	521	1
11:45 - 12:00	0	167	53	220	70	159	0	229	0	0	0	0	50	0	80	130	579	0
12:00 - 12:15	0	144	52	196	71	159	0	230	0	0	0	0	74	0	94	168	594	0
12:15 - 12:30	0	197	71	268	85	184	0	269	0	0	0	0	44	0	101	145	682	0
12:30 - 12:45	0	180	49	229	88	168	0	256	0	0	0	0	62	0	101	163	648	0
12:45 - 13:00	0	166	49	215	80	182	0	262	0	0	0	0	48	0	108	156	633	0
13:00 - 13:15	0	183	48	231	86	154	0	240	0	0	0	0	58	0	117	175	646	3
13:15 - 13:30	0	164	42	206	72	169	0	241	0	0	0	0	57	0	100	157	604	0
13:30 - 13:45	0	169	45	214	68	162	0	230	0	0	0	0	53	0	95	148	592	0
13:45 - 14:00	0	154	38	192	72	174	0	246	0	0	0	0	51	0	107	158	596	1
14:00 - 14:15	0	162	46	208	68	170	0	238	0	0	0	0	51	0	98	149	595	0
14:15 - 14:30	0	166	51	217	76	144	0	220	0	0	0	0	49	0	0	49	486	0
14:30 - 14:45	0	158	39	197	67	167	0	234	0	0	0	0	49	0	78	127	558	0
14:45 - 15:00	0	176	24	200	79	153	0	232	0	0	0	0	62	0	98	160	592	0
15:00 - 15:15	0	125	46	171	76	170	0	246	0	0	0	0	57	0	96	153	570	2
15:15 - 15:30	0	0	46	46	68	169	0	237	0	0	0	0	44	0	89	133	416	0
15:30 - 15:45	0	147	27	174	59	179	0	238	0	0	0	0	60	0	103	163	575	0
15:45 - 16:00	0	147	40	187	68	203	0	271	0	0	0	0	71	0	84	155	613	0
16:00 - 16:15	0	160	42	202	80	210	0	290	0	0	0	0	82	0	95	177	669	0
16:15 - 16:30	0	135	41	176	85	209	0	294	0	0	0	0	68	0	101	169	639	0
16:30 - 16:45	0	170	42	212	94	246	0	340	0	0	0	0	88	0	95	183	735	0
16:45 - 17:00	0	169	25	194	92	214	0	306	0	0	0	0	87	0	96	183	683	1
17:00 - 17:15	0	165	36	201	73	270	0	343	0	0	0	0	53	0	110	163	707	0
17:15 - 17:30	0	140	36	176	99	206	0	305	0	0	0	0	85	0	92	177	658	0
17:30 - 17:45	0	138	27	165	105	225	0	330	0	0	0	0	65	0	99	164	659	0
17:45 - 18:00	0	154	47	201	113	297	0	410	0	0	0	0	67	0	81	148	759	0
18:00 - 18:15	0	116	37	153	130	279	0	409	0	0	0	0	70	0	99	169	731	0
18:15 - 18:30	0	0	39	39	94	235	0	329	0	0	0	0	62	0	103	165	533	0
18:30 - 18:45	0	174	36	210	78	232	0	310	0	0	0	0	31	0	75	106	626	1
18:45 - 19:00	0	142	21	163	73	225	0	298	0	0	0	0	46	0	84	130	591	0
TOTAL	0	7987	2001	9988	3405	8238	0	11643	0	0	0	0	2486	0	4088	6574	28205	14
Trucks	0	147	21	168	52	118	0	170	0	0	0	0	23	0	60	83	421	1.5%
School Buses	0	22	21	43	25	37	0	62	0	0	0	0	17	0	26	43	148	0.5%

TOTAL AND PEAK HOUR VOLUME DIAGRAMS

Broad River Rd AT Bush River Rd Date: 11/29/2016

12.0 HOUR TOTAL VOLUME
FROM 7:00 TO 15:00

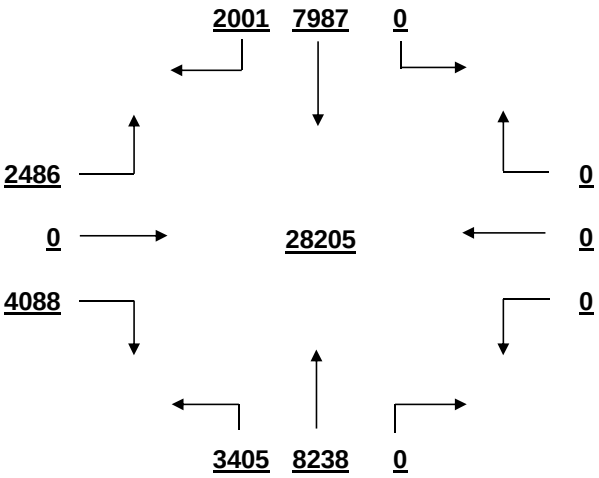

OVERALL PEAK HOUR VOLUME
FROM 17:15 TO 18:15

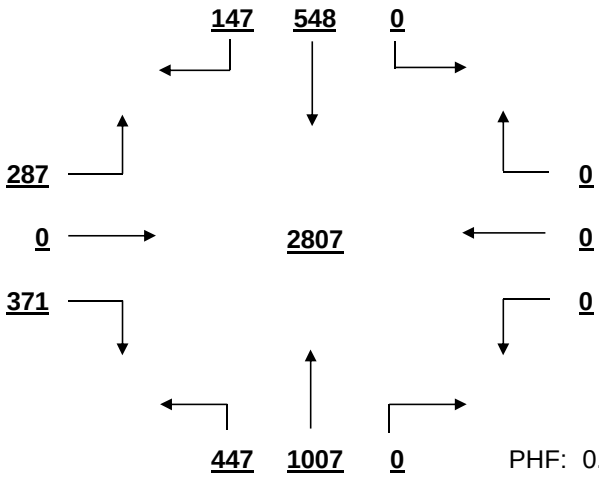

PHF: 0.925

AM PEAK HOUR VOLUME (0:00-10:45)
FROM 7:30 TO 8:30

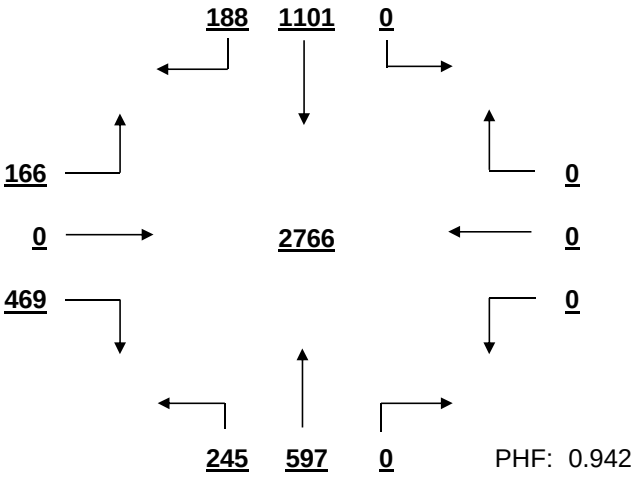

PHF: 0.942

PM PEAK HOUR VOLUME (14:15-23:45)
FROM 17:15 TO 18:15

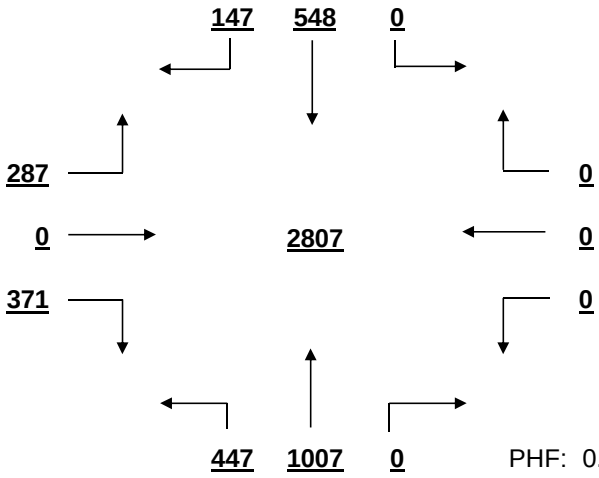

PHF: 0.925

MID-DAY PEAK HOUR VOLUME (11:00-14:00)
FROM 12:15 TO 13:15

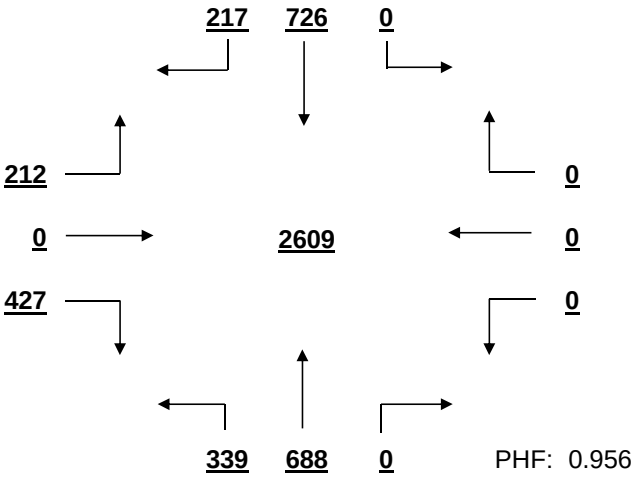

PHF: 0.956

OTHER HOUR VOLUME
FROM 7:00 TO 8:00

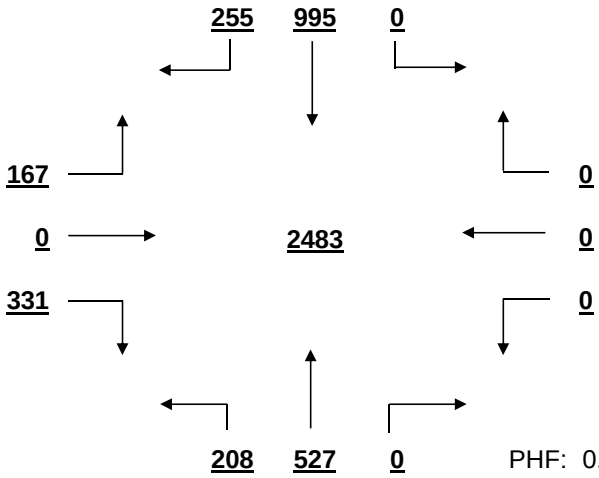

PHF: 0.846

SIGNAL WARRANT ANALYSIS

Broad River Rd AT Bush River Rd Date: 11/29/2016

Minor Street Volume, percent of total = 23.3%
Percent of Left Turns from Minor Street = 37.8%
Percent of Right Turns from Minor Street = 62.2%
Percent of Minor Street Right Turns to Remove from Warrant Analysis = 0%
WARRANT BASIS = **100%**

Warrant No. 1 - Vehicular Volume is met

Condition A - Minimum Vehicular Volume is met

Average Major Street % of Warrant				Average Minor Street % of Warrant			
1802.6	/ 600	=	300%	547.8	/ 200	=	274%

Hourly percent of warrant

	7:00 - 8:00	8:00 - 9:00	9:00 - 10:00	10:00 - 11:00	11:00 - 12:00	12:00 - 13:00	13:00 - 14:00	14:00 - 15:00	15:00 - 16:00	16:00 - 17:00	17:00 - 18:00	18:00 - 19:00
Major St.	331%	335%	248%	239%	269%	321%	300%	291%	262%	336%	355%	319%
Minor St.	249%	259%	191%	197%	246%	316%	319%	243%	302%	356%	326%	285%

Condition B - Interruption to Continuous Traffic is met

Average Major Street % of Warrant				Average Minor Street % of Warrant			
1802.6	/ 900	=	200%	547.8	/ 100	=	548%

Hourly percent of warrant

	7:00 - 8:00	8:00 - 9:00	9:00 - 10:00	10:00 - 11:00	11:00 - 12:00	12:00 - 13:00	13:00 - 14:00	14:00 - 15:00	15:00 - 16:00	16:00 - 17:00	17:00 - 18:00	18:00 - 19:00
Major St.	221%	224%	165%	159%	180%	214%	200%	194%	174%	224%	237%	212%
Minor St.	498%	517%	381%	393%	492%	632%	638%	485%	604%	712%	652%	570%

80% Combination of Conditions A & B is met

Warrant No. 2 - Four Hour Vehicular Volume is met

Hourly percent of warrant

	7:00 - 8:00	8:00 - 9:00	9:00 - 10:00	10:00 - 11:00	11:00 - 12:00	12:00 - 13:00	13:00 - 14:00	14:00 - 15:00	15:00 - 16:00	16:00 - 17:00	17:00 - 18:00	18:00 - 19:00
Minor St.	433%	450%	331%	342%	428%	550%	555%	422%	525%	619%	567%	496%

Warrant No. 3 - Peak Hour is met

	Percent of warrant		Percent of warrant
Overall Peak Hour:	17:15 - 18:15	Higher Volume Side Street Peak Hour:	16:00 - 17:00
Minor St.	439%	Minor St.	475%

Warrant No. 4 - Pedestrian Volume. Pedestrian volume shown are minumum volumes assuming heavy major street traffic. If these volumes are met, warrant 4 requires further engineering analysis

Minimum 4 hour ped. volume crossing major street: 107

Minimum peak hour ped. volume crossing major street: 133

Number of pedestrians crossing major street

	7:00 - 8:00	8:00 - 9:00	9:00 - 10:00	10:00 - 11:00	11:00 - 12:00	12:00 - 13:00	13:00 - 14:00	14:00 - 15:00	15:00 - 16:00	16:00 - 17:00	17:00 - 18:00	18:00 - 19:00
Major St.	0	0	0	0	0	0	1	0	1	0	0	0

Warrant No. 7 - Crash Experience (Requires 3 criteria analysis by engineering)

Total Number: 0 From: 1/1/2005 to 1/1/2008
Accident Rate: 0.00 per million entering vehicles

Types of Accidents	No.	/	Avg.		No.	/	Avg.
Right Angle	0	/	0.0	Rear End	0	/	0.0
Lost Control	0	/	0.0	Side Swipe	0	/	0.0
Left Turn	0	/	0.0	Other	0	/	0.0

SOUTH CAROLINA DEPARTMENT OF TRANSPORTATION
DISTRICT 1
TRAFFIC ENGINEERING

County: Richland City: Columbia Date: 11/29/2016

Major Rt: Broad River Rd * Not on State System Minor Rt: Arrowwood Dr-Means Ave Clear

Day of Week: Tuesday Weather: Rain Office: Short Counts JMS

Type of Control: Signal Speed Limit (major st) 40

Direction of Minor Street: E-W Intersection ADT - 23110 (Calc)

Number of Lanes (major st)* 2 Number of Lanes (minor st)* 1

* Each Direction

INTERSECTION VOLUME SUMMARY

	From N Broad River Rd				From S Broad River Rd				From E Arrowwood Dr-Means				From W Arrowwood Dr-Means				Total	Total
	LT	STR	RT	TOT	LT	STR	RT	TOT	LT	STR	RT	TOT	LT	STR	RT	TOT	Vol	Peds
7:00 - 7:15	1	225	10	236	15	106	0	121	0	0	3	3	10	0	10	20	380	0
7:15 - 7:30	0	321	10	331	21	128	1	150	1	1	0	2	9	0	0	9	492	1
7:30 - 7:45	0	390	7	397	17	150	0	167	0	0	2	2	10	0	19	29	595	0
7:45 - 8:00	4	352	8	364	23	172	0	195	1	0	1	2	5	0	15	20	581	0
8:00 - 8:15	3	325	6	334	20	154	0	174	2	0	0	2	5	0	18	23	533	0
8:15 - 8:30	1	366	0	367	6	194	0	200	2	0	2	4	6	0	7	13	584	0
8:30 - 8:45	0	329	0	329	5	173	1	179	2	1	0	3	7	0	9	16	527	1
8:45 - 9:00	1	266	2	269	15	149	0	164	3	0	1	4	2	0	5	7	444	1
9:00 - 9:15	0	244	1	245	4	129	0	133	1	1	0	2	2	1	6	9	389	1
9:15 - 9:30	0	214	2	216	3	137	0	140	1	1	0	2	1	0	1	2	360	0
9:30 - 9:45	4	197	3	204	1	155	0	156	4	0	2	6	4	0	2	6	372	2
9:45 - 10:00	0	178	4	182	0	165	0	165	0	0	0	0	0	2	4	6	353	0
10:00 - 10:15	0	214	3	217	0	151	0	151	0	0	0	0	3	0	6	9	377	1
10:15 - 10:30	0	190	2	192	4	180	0	184	2	0	2	4	2	0	6	8	388	0
10:30 - 10:45	0	198	1	199	2	178	1	181	0	0	0	0	3	0	2	5	385	0
10:45 - 11:00	0	179	2	181	2	166	4	172	1	0	0	1	0	0	6	6	360	2
11:00 - 11:15	0	178	2	180	2	178	0	180	1	0	1	2	3	0	7	10	372	1
11:15 - 11:30	0	201	6	207	4	199	0	203	1	0	0	1	4	0	6	10	421	0
11:30 - 11:45	1	196	2	199	5	201	0	206	1	0	0	1	1	0	5	6	412	2
11:45 - 12:00	1	208	3	212	3	198	0	201	1	1	1	3	3	0	5	8	424	2
12:00 - 12:15	0	215	0	215	4	225	0	229	0	0	3	3	7	0	10	17	464	2
12:15 - 12:30	0	255	6	261	1	232	0	233	1	0	0	1	3	0	8	11	506	0
12:30 - 12:45	1	253	3	257	2	230	0	232	0	0	4	4	11	1	12	24	517	0
12:45 - 13:00	0	255	5	260	2	217	0	219	1	0	0	1	8	0	10	18	498	2
13:00 - 13:15	2	247	7	256	4	213	0	217	1	0	0	1	2	0	4	6	480	2
13:15 - 13:30	2	246	3	251	4	227	0	231	2	0	2	4	4	0	9	13	499	0
13:30 - 13:45	0	246	8	254	5	196	1	202	0	0	1	1	4	0	5	9	466	1
13:45 - 14:00	1	239	2	242	5	221	2	228	1	0	2	3	1	0	7	8	481	2
14:00 - 14:15	0	211	3	214	9	222	0	231	3	0	1	4	2	0	10	12	461	1
14:15 - 14:30	0	246	4	250	7	202	0	209	2	0	1	3	3	1	0	4	466	0
14:30 - 14:45	1	210	3	214	9	198	0	207	0	0	0	0	8	1	19	28	449	0
14:45 - 15:00	2	249	4	255	5	206	0	211	1	0	0	1	9	0	16	25	492	3
15:00 - 15:15	0	210	2	212	4	202	1	207	1	0	1	2	9	0	7	16	437	2
15:15 - 15:30	1	0	1	2	5	201	1	207	1	0	0	1	6	0	8	14	224	0
15:30 - 15:45	1	213	3	217	7	230	1	238	1	0	0	1	6	0	11	17	473	1
15:45 - 16:00	0	227	3	230	12	224	0	236	0	1	0	1	6	0	13	19	486	0
16:00 - 16:15	1	215	4	220	8	250	2	260	0	0	4	4	8	0	21	29	513	0
16:15 - 16:30	0	204	8	212	9	253	0	262	1	0	2	3	16	0	17	33	510	0
16:30 - 16:45	0	208	5	213	4	277	0	281	4	0	1	5	10	0	26	36	535	0
16:45 - 17:00	2	242	5	249	9	282	0	291	1	0	3	4	4	1	14	19	563	1
17:00 - 17:15	1	241	2	244	10	319	4	333	4	0	1	5	13	0	19	32	614	0
17:15 - 17:30	2	219	3	224	21	269	2	292	4	0	4	8	5	0	18	23	547	0
17:30 - 17:45	0	202	6	208	27	307	0	334	3	1	3	7	6	1	24	31	580	0
17:45 - 18:00	0	206	6	212	20	312	1	333	4	2	1	7	3	0	15	18	570	0
18:00 - 18:15	0	193	7	200	24	334	3	361	5	0	3	8	5	0	15	20	589	1
18:15 - 18:30	0	0	2	2	6	296	0	302	1	0	0	1	5	1	20	26	331	0
18:30 - 18:45	0	203	1	204	8	255	1	264	1	0	0	1	3	0	7	10	479	0
18:45 - 19:00	1	197	0	198	5	266	1	272	1	0	0	1	2	0	3	5	476	0
TOTAL	34	10823	180	11037	388	10129	27	10544	68	9	52	129	249	9	487	745	22455	32
Trucks	0	151	6	157	4	137	0	141	0	0	0	0	4	0	7	11	309	1.4%
School Buses	0	38	2	40	10	43	0	53	0	0	0	0	18	3	12	33	126	0.6%

TOTAL AND PEAK HOUR VOLUME DIAGRAMS

Broad River Rd AT Arrowwood Dr-Means Ave Date: 11/29/2016

12.0 HOUR TOTAL VOLUME
FROM 7:00 TO 15:00

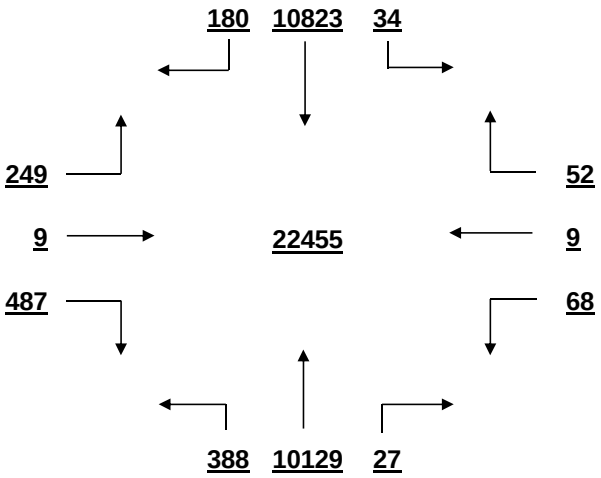

OVERALL PEAK HOUR VOLUME
FROM 17:00 TO 18:00

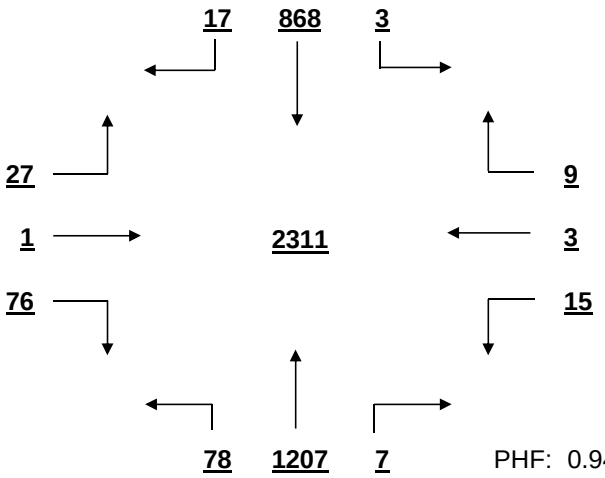

PHF: 0.941

AM PEAK HOUR VOLUME (0:00-10:45)
FROM 7:30 TO 8:30

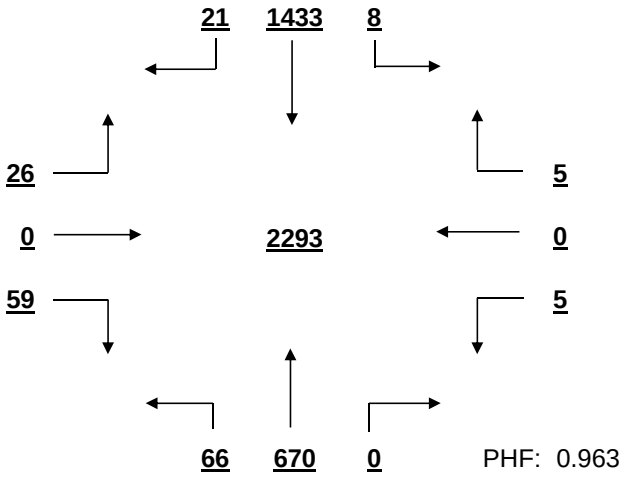

PHF: 0.963

PM PEAK HOUR VOLUME (14:15-23:45)
FROM 17:00 TO 18:00

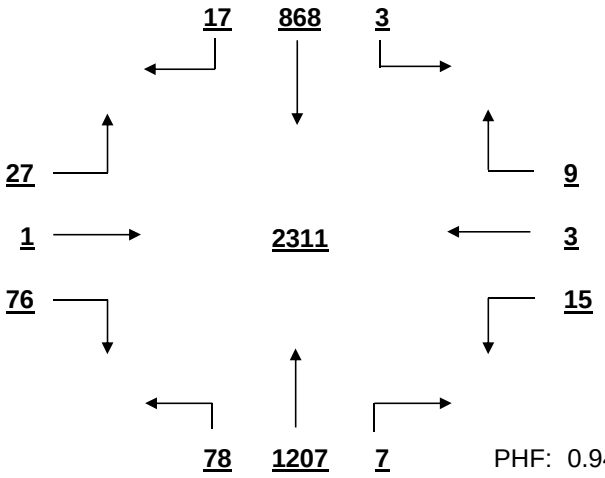

PHF: 0.941

MID-DAY PEAK HOUR VOLUME (11:00-14:00)
FROM 12:15 TO 13:15

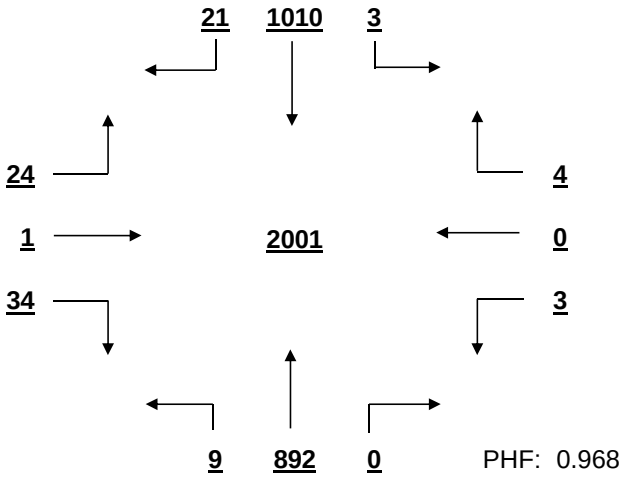

PHF: 0.968

OTHER HOUR VOLUME
FROM 7:00 TO 8:00

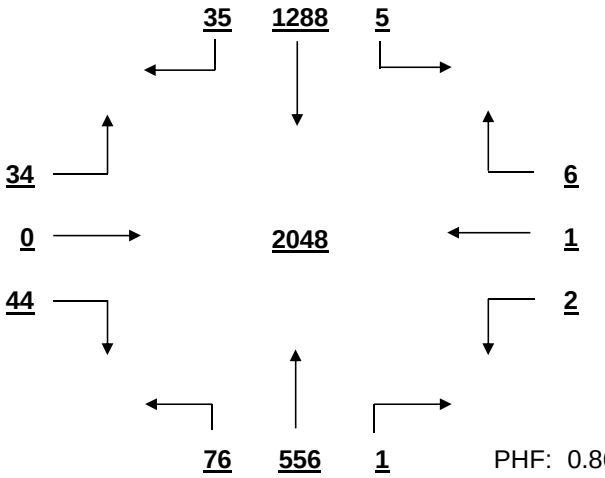

PHF: 0.861

SIGNAL WARRANT ANALYSIS

Broad River Rd AT Arrowwood Dr-Means Ave Date: 11/29/2016

Minor Street Volume, percent of total = 3.9%
Percent of Left Turns from Minor Street = 36.3%
Percent of Right Turns from Minor Street = 61.7%
Percent of Minor Street Right Turns to Remove from Warrant Analysis = 0%
WARRANT BASIS = **100%**

Warrant No. 1 - Vehicular Volume is not met

Condition A - Minimum Vehicular Volume is not met

Average Major Street % of Warrant				Average Minor Street % of Warrant			
1798.4	/ 600	=	300%	62.1	/ 150	=	41%

Hourly percent of warrant

	7:00 - 8:00	8:00 - 9:00	9:00 - 10:00	10:00 - 11:00	11:00 - 12:00	12:00 - 13:00	13:00 - 14:00	14:00 - 15:00	15:00 - 16:00	16:00 - 17:00	17:00 - 18:00	18:00 - 19:00
Major St.	327%	336%	240%	246%	265%	318%	314%	299%	258%	331%	363%	301%
Minor St.	52%	39%	15%	19%	23%	47%	24%	46%	44%	78%	69%	41%

Condition B - Interruption to Continuous Traffic is not met

Average Major Street % of Warrant				Average Minor Street % of Warrant			
1798.4	/ 900	=	200%	62.1	/ 75	=	83%

Hourly percent of warrant

	7:00 - 8:00	8:00 - 9:00	9:00 - 10:00	10:00 - 11:00	11:00 - 12:00	12:00 - 13:00	13:00 - 14:00	14:00 - 15:00	15:00 - 16:00	16:00 - 17:00	17:00 - 18:00	18:00 - 19:00
Major St.	218%	224%	160%	164%	176%	212%	209%	199%	172%	221%	242%	200%
Minor St.	104%	79%	31%	37%	45%	93%	48%	92%	88%	156%	139%	81%

80% Combination of Conditions A & B is not met

Warrant No. 2 - Four Hour Vehicular Volume is not met

Hourly percent of warrant

	7:00 - 8:00	8:00 - 9:00	9:00 - 10:00	10:00 - 11:00	11:00 - 12:00	12:00 - 13:00	13:00 - 14:00	14:00 - 15:00	15:00 - 16:00	16:00 - 17:00	17:00 - 18:00	18:00 - 19:00
Minor St.	98%	74%	29%	35%	43%	88%	45%	86%	83%	146%	130%	76%

Warrant No. 3 - Peak Hour is met

Percent of warrant			Percent of warrant		
Overall Peak Hour:	17:00 - 18:00		Higher Volume Side Street Peak Hour:	16:15 - 17:15	
Minor St.	104%		Minor St.	120%	

Warrant No. 4 - Pedestrian Volume. Pedestrian volume shown are minumum volumes assuming heavy major street traffic. If these volumes are met, warrant 4 requires further engineering analysis

Minimum 4 hour ped. volume crossing major street	Minimum peak hour ped. volume crossing major street
107	133

Number of pedestrians crossing major street

	7:00 - 8:00	8:00 - 9:00	9:00 - 10:00	10:00 - 11:00	11:00 - 12:00	12:00 - 13:00	13:00 - 14:00	14:00 - 15:00	15:00 - 16:00	16:00 - 17:00	17:00 - 18:00	18:00 - 19:00
Major St.	0	0	1	1	0	0	2	1	0	0	0	0

Warrant No. 7 - Crash Experience (Requires 3 criteria analysis by engineering)

Total Number: 0 From: 1/1/2005 to 1/1/2008
Accident Rate: 0.00 per million entering vehicles

Types of Accidents	No.	/	Avg.		No.	/	Avg.
Right Angle	0	/	0.0	Rear End	0	/	0.0
Lost Control	0	/	0.0	Side Swipe	0	/	0.0
Left Turn	0	/	0.0	Other	0	/	0.0

SOUTH CAROLINA DEPARTMENT OF TRANSPORTATION
DISTRICT 1
TRAFFIC ENGINEERING

County: Richland City: Columbia Date: 11/29/2016

Major Rt: Broad River Rd * Not on State System Minor Rt: Greystone Blvd-Gas Station Clear

Day of Week: Tuesday Weather: Rain Office: Short Counts JMS

Type of Control: Signal Speed Limit (major st) 40

Direction of Minor Street: N-S Intersection ADT - 32150 (Calc)

Number of Lanes (major st)* 2 Number of Lanes (minor st)* 2

* Each Direction

INTERSECTION VOLUME SUMMARY

	From N Greystone Blvd-Gas				From S Greystone Blvd-Gas				From E Broad River Rd				From W Broad River Rd				Total	Total
	LT	STR	RT	TOT	LT	STR	RT	TOT	LT	STR	RT	TOT	LT	STR	RT	TOT	Vol	Peds
7:00 - 7:15	2	0	5	7	24	0	30	54	66	86	8	160	4	173	80	257	478	1
7:15 - 7:30	1	0	11	12	34	1	52	87	101	125	4	230	6	218	0	224	553	0
7:30 - 7:45	1	0	8	9	27	3	52	82	101	129	9	239	4	261	151	416	746	2
7:45 - 8:00	0	1	8	9	40	2	54	96	123	174	7	304	4	0	137	141	550	0
8:00 - 8:15	2	0	7	9	33	2	43	78	103	146	4	253	5	243	135	383	723	0
8:15 - 8:30	2	0	0	2	42	2	36	80	100	173	4	277	2	231	142	375	734	1
8:30 - 8:45	1	0	4	5	32	2	40	74	85	134	4	223	0	200	129	329	631	2
8:45 - 9:00	3	2	2	7	42	0	32	74	81	127	7	215	0	192	119	311	607	1
9:00 - 9:15	0	1	5	6	32	0	40	72	52	99	5	156	3	149	91	243	477	0
9:15 - 9:30	3	1	4	8	42	0	38	80	69	105	3	177	1	118	77	196	461	2
9:30 - 9:45	4	0	7	11	51	1	46	98	57	107	5	169	2	121	85	208	486	1
9:45 - 10:00	1	0	7	8	51	3	29	83	47	124	5	176	2	105	78	185	452	1
10:00 - 10:15	1	1	6	8	0	1	0	1	49	108	3	160	2	146	68	216	385	0
10:15 - 10:30	2	1	6	9	54	2	37	93	41	134	5	180	4	121	63	188	470	0
10:30 - 10:45	2	2	10	14	54	3	36	93	48	125	8	181	5	125	75	205	493	1
10:45 - 11:00	1	1	7	9	35	1	38	74	45	116	4	165	1	125	79	205	453	0
11:00 - 11:15	0	2	7	9	49	1	33	83	37	127	1	165	2	131	57	190	447	0
11:15 - 11:30	4	1	7	12	47	0	37	84	23	137	0	160	1	125	75	201	457	0
11:30 - 11:45	1	0	4	5	80	0	40	120	37	133	0	170	4	119	58	181	476	0
11:45 - 12:00	3	2	4	9	51	3	40	94	50	133	0	183	0	128	88	216	502	0
12:00 - 12:15	3	1	9	13	98	3	59	160	39	108	0	147	6	136	79	221	541	0
12:15 - 12:30	1	1	9	11	74	0	26	100	49	153	0	202	1	0	91	92	405	0
12:30 - 12:45	1	0	14	15	70	4	48	122	60	146	0	206	2	155	128	285	628	1
12:45 - 13:00	1	1	6	8	84	3	40	127	61	146	0	207	1	166	89	256	598	3
13:00 - 13:15	3	2	8	13	85	5	56	146	43	146	6	195	3	172	93	268	622	0
13:15 - 13:30	2	0	9	11	67	2	43	112	48	145	7	200	3	159	85	247	570	0
13:30 - 13:45	1	1	13	15	53	2	51	106	43	142	11	196	4	174	90	268	585	1
13:45 - 14:00	2	1	9	12	78	3	51	132	56	150	7	213	2	147	85	234	591	0
14:00 - 14:15	2	0	12	14	63	2	59	124	39	140	7	186	2	161	67	230	554	3
14:15 - 14:30	3	0	6	9	52	2	58	112	50	158	6	214	1	178	0	179	514	0
14:30 - 14:45	2	1	6	9	62	3	54	119	60	150	7	217	2	155	67	224	569	0
14:45 - 15:00	1	0	10	11	65	0	55	120	44	148	8	200	3	177	80	260	591	0
15:00 - 15:15	1	1	9	11	74	3	50	127	45	151	5	201	4	146	61	211	550	1
15:15 - 15:30	3	0	11	14	53	4	51	108	55	153	7	215	4	172	73	249	586	0
15:30 - 15:45	1	0	5	6	67	2	49	118	55	173	3	231	2	151	76	229	584	0
15:45 - 16:00	3	1	4	8	45	0	73	118	53	190	3	246	5	151	63	219	591	1
16:00 - 16:15	2	0	7	9	77	2	98	177	48	199	5	252	2	187	55	244	682	0
16:15 - 16:30	2	3	7	12	66	4	72	142	55	211	3	269	2	145	72	219	642	0
16:30 - 16:45	0	0	4	4	86	2	87	175	57	201	6	264	2	199	50	251	694	0
16:45 - 17:00	2	1	8	11	82	1	88	171	43	235	4	282	2	190	73	265	729	0
17:00 - 17:15	0	1	7	8	135	0	93	228	59	243	11	313	0	197	83	280	829	0
17:15 - 17:30	1	1	13	15	115	4	74	193	55	266	10	331	2	163	74	239	778	0
17:30 - 17:45	0	0	11	11	80	0	98	178	47	330	4	381	0	175	67	242	812	0
17:45 - 18:00	0	0	14	14	62	1	61	124	63	341	4	408	1	173	76	250	796	0
18:00 - 18:15	1	0	11	12	75	1	66	142	70	285	6	361	5	167	71	243	758	0
18:15 - 18:30	2	0	15	17	84	1	65	150	56	231	2	289	5	161	47	213	669	0
18:30 - 18:45	1	1	18	20	54	4	52	110	51	251	2	304	4	181	51	236	670	0
18:45 - 19:00	1	0	11	12	94	4	37	135	39	193	0	232	2	140	49	191	570	1
TOTAL	76	32	385	493	2920	89	2467	5476	2758	7927	220	10905	124	7509	3782	11415	28289	23
Trucks	0	0	1	1	44	1	47	92	30	75	0	105	0	76	50	126	324	1.1%
School Buses	0	0	0	0	24	0	7	31	3	16	0	19	0	26	27	53	103	0.4%

TOTAL AND PEAK HOUR VOLUME DIAGRAMS

Broad River Rd AT Greystone Blvd-Gas Station Date: 11/29/2016

12.0 HOUR TOTAL VOLUME
FROM 7:00 TO 15:00

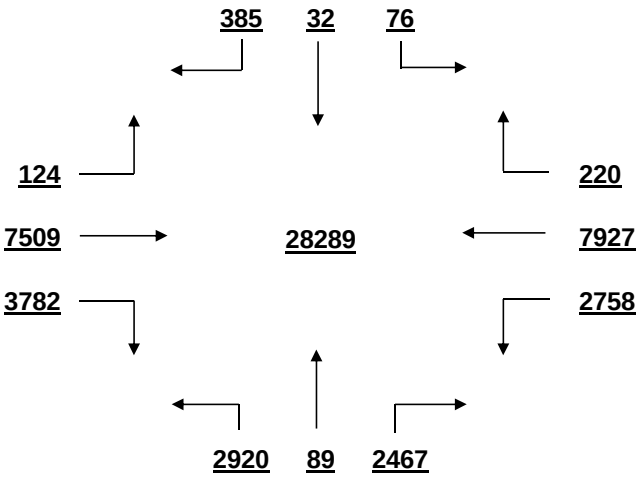

OVERALL PEAK HOUR VOLUME
FROM 17:00 TO 18:00

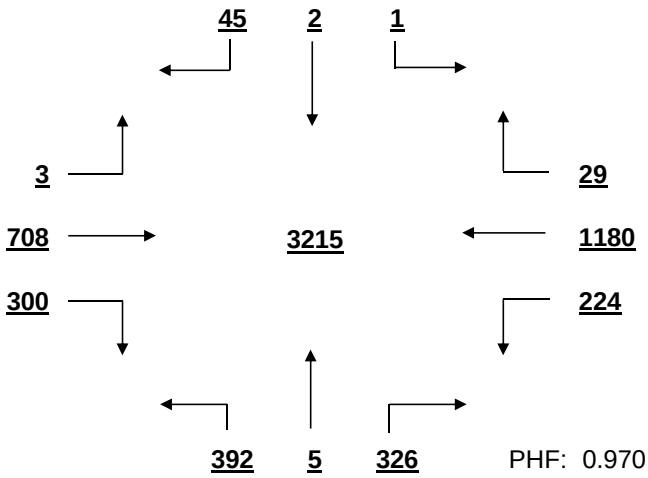

PHF: 0.970

AM PEAK HOUR VOLUME (0:00-10:45)
FROM 7:30 TO 8:30

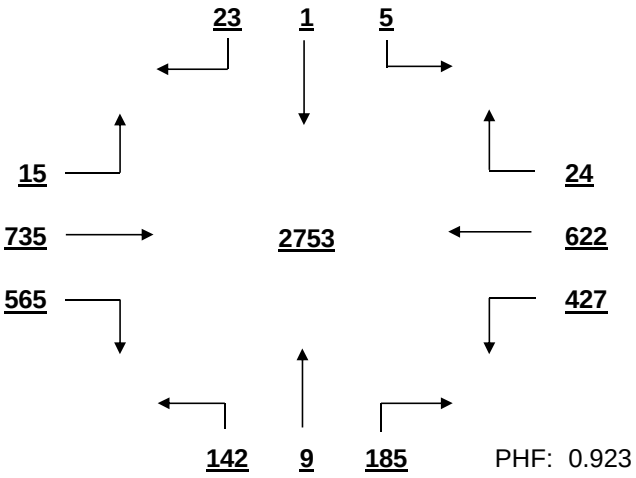

PHF: 0.923

PM PEAK HOUR VOLUME (14:15-23:45)
FROM 17:00 TO 18:00

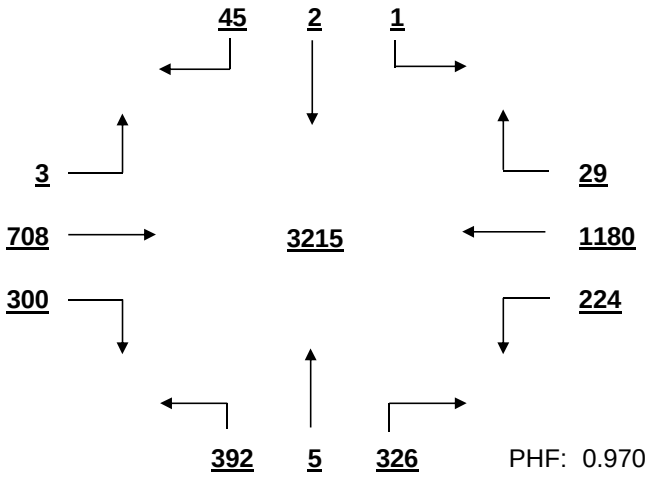

PHF: 0.970

MID-DAY PEAK HOUR VOLUME (11:00-14:00)
FROM 12:30 TO 13:30

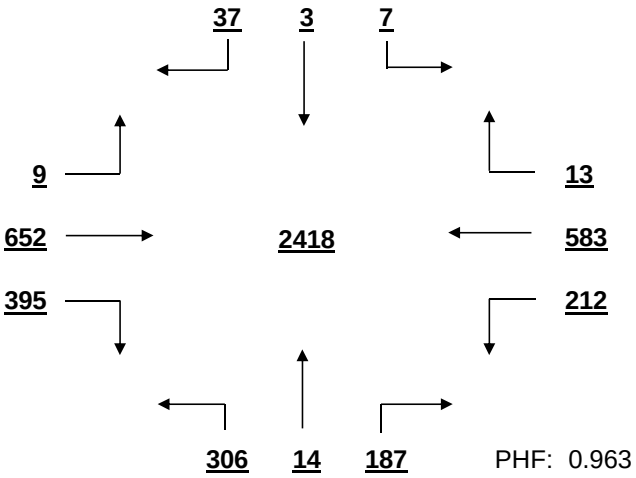

PHF: 0.963

OTHER HOUR VOLUME
FROM 7:00 TO 8:00

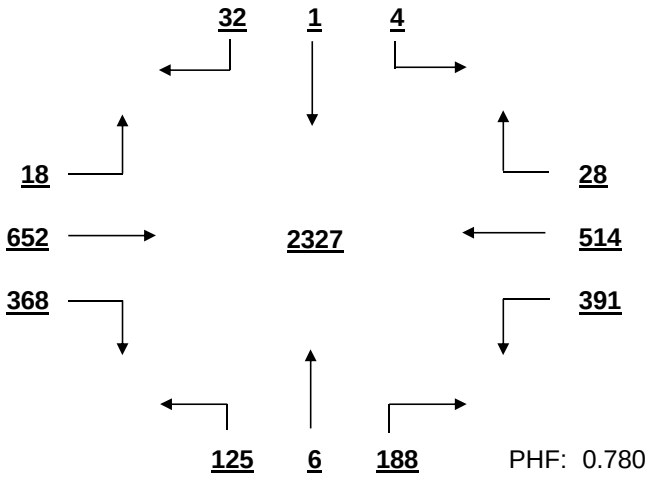

PHF: 0.780

SIGNAL WARRANT ANALYSIS

Broad River Rd AT Greystone Blvd-Gas Station Date: 11/29/2016

Minor Street Volume, percent of total = 21.1%
Percent of Left Turns from Minor Street = 50.2%
Percent of Right Turns from Minor Street = 47.8%
Percent of Minor Street Right Turns to Remove from Warrant Analysis = 0%
WARRANT BASIS = **100%**

Warrant No. 1 - Vehicular Volume is met

Condition A - Minimum Vehicular Volume is met

Average Major Street % of Warrant				Average Minor Street % of Warrant			
1860.0	/ 600	=	310%	456.3	/ 200	=	228%

Hourly percent of warrant

	7:00 - 8:00	8:00 - 9:00	9:00 - 10:00	10:00 - 11:00	11:00 - 12:00	12:00 - 13:00	13:00 - 14:00	14:00 - 15:00	15:00 - 16:00	16:00 - 17:00	17:00 - 18:00	18:00 - 19:00
Major St.	329%	394%	252%	250%	244%	269%	304%	285%	300%	341%	407%	345%
Minor St.	160%	153%	167%	131%	191%	255%	248%	238%	236%	333%	362%	269%

Condition B - Interruption to Continuous Traffic is met

Average Major Street % of Warrant				Average Minor Street % of Warrant			
1860.0	/ 900	=	207%	456.3	/ 100	=	456%

Hourly percent of warrant

	7:00 - 8:00	8:00 - 9:00	9:00 - 10:00	10:00 - 11:00	11:00 - 12:00	12:00 - 13:00	13:00 - 14:00	14:00 - 15:00	15:00 - 16:00	16:00 - 17:00	17:00 - 18:00	18:00 - 19:00
Major St.	219%	263%	168%	167%	163%	180%	202%	190%	200%	227%	272%	230%
Minor St.	319%	306%	333%	261%	381%	509%	496%	475%	471%	665%	723%	537%

80% Combination of Conditions A & B is met

Warrant No. 2 - Four Hour Vehicular Volume is met

Hourly percent of warrant

	7:00 - 8:00	8:00 - 9:00	9:00 - 10:00	10:00 - 11:00	11:00 - 12:00	12:00 - 13:00	13:00 - 14:00	14:00 - 15:00	15:00 - 16:00	16:00 - 17:00	17:00 - 18:00	18:00 - 19:00
Minor St.	277%	266%	290%	227%	331%	443%	431%	413%	410%	578%	629%	467%

Warrant No. 3 - Peak Hour is met

	Percent of warrant		Percent of warrant
Overall Peak Hour:	17:00 - 18:00	Higher Volume Side Street Peak Hour:	16:45 - 17:45
Minor St.	482%	Minor St.	513%

Warrant No. 4 - Pedestrian Volume. Pedestrian volume shown are minumum volumes assuming heavy major street traffic. If these volumes are met, warrant 4 requires further engineering analysis

Minimum 4 hour ped. volume crossing major street: 107

Minimum peak hour ped. volume crossing major street: 133

Number of pedestrians crossing major street

	7:00 - 8:00	8:00 - 9:00	9:00 - 10:00	10:00 - 11:00	11:00 - 12:00	12:00 - 13:00	13:00 - 14:00	14:00 - 15:00	15:00 - 16:00	16:00 - 17:00	17:00 - 18:00	18:00 - 19:00
Major St.	2	2	3	0	0	0	1	1	1	0	0	0

Warrant No. 7 - Crash Experience (Requires 3 criteria analysis by engineering)

Total Number: 0 From: 1/1/2005 to 1/1/2008
Accident Rate: 0.00 per million entering vehicles

Types of Accidents	No.	/	Avg.		No.	/	Avg.
Right Angle	0	/	0.0	Rear End	0	/	0.0
Lost Control	0	/	0.0	Side Swipe	0	/	0.0
Left Turn	0	/	0.0	Other	0	/	0.0

SOUTH CAROLINA DEPARTMENT OF TRANSPORTATION
DISTRICT 1
TRAFFIC ENGINEERING

County: Richland City: Columbia Date: 12/1/2016

Major Rt: Sunset Blvd * Not on State System Minor Rt: W. Hospital Dr-Sunset Ct

Day of Week: Thursday Weather: Clear Office: Short Counts JMS

Type of Control: Signal Speed Limit (major st) 40

Direction of Minor Street: N-S Intersection ADT - 40670 (Calc)

Number of Lanes (major st)* 2 Number of Lanes (minor st)* 1

* Each Direction

INTERSECTION VOLUME SUMMARY

	From N W. Hospital Dr-Sun				From S W. Hospital Dr-Sun				From E Sunset Blvd				From W Sunset Blvd				Total	Total
	LT	STR	RT	TOT	LT	STR	RT	TOT	LT	STR	RT	TOT	LT	STR	RT	TOT	Vol	Peds
7:00 - 7:15	26	1	16	43	2	3	0	5	9	164	85	258	71	348	9	428	734	1
7:15 - 7:30	63	3	21	87	3	4	5	12	20	209	97	326	112	389	0	501	926	0
7:30 - 7:45	49	1	42	92	2	5	6	13	20	249	70	339	87	460	9	556	1000	0
7:45 - 8:00	45	3	22	70	1	6	6	13	17	266	103	386	83	0	23	106	575	0
8:00 - 8:15	59	3	21	83	2	5	4	11	16	258	70	344	74	363	9	446	884	0
8:15 - 8:30	35	1	0	36	1	4	7	12	18	242	71	331	96	424	16	536	915	1
8:30 - 8:45	45	0	28	73	2	4	4	10	17	242	68	327	67	369	7	443	853	0
8:45 - 9:00	49	0	29	78	2	6	7	15	14	223	52	289	38	309	4	351	733	2
9:00 - 9:15	46	2	28	76	6	3	7	16	7	206	40	253	37	272	4	313	658	2
9:15 - 9:30	47	7	27	81	4	5	13	22	11	230	51	292	41	321	6	368	763	0
9:30 - 9:45	33	7	32	72	7	6	7	20	9	240	29	278	38	301	10	349	719	0
9:45 - 10:00	44	1	24	69	7	0	7	14	11	216	38	265	30	278	2	310	658	0
10:00 - 10:15	53	1	27	81	0	4	0	4	10	225	29	264	34	253	6	293	642	0
10:15 - 10:30	68	0	32	100	3	1	14	18	9	228	45	282	34	305	7	346	746	0
10:30 - 10:45	61	0	22	83	7	1	9	17	12	294	47	353	33	291	2	326	779	0
10:45 - 11:00	54	3	37	94	2	3	8	13	10	225	29	264	28	278	4	310	681	0
11:00 - 11:15	59	3	26	88	5	4	8	17	16	271	43	330	32	264	3	299	734	2
11:15 - 11:30	68	3	34	105	7	0	10	17	12	240	38	290	27	261	3	291	703	1
11:30 - 11:45	66	4	42	112	8	1	17	26	15	296	41	352	25	298	5	328	818	0
11:45 - 12:00	69	7	40	116	6	3	11	20	14	255	53	322	31	311	4	346	804	2
12:00 - 12:15	74	4	44	122	11	3	13	27	21	286	43	350	25	309	2	336	835	1
12:15 - 12:30	69	4	51	124	20	6	17	43	16	299	49	364	38	0	10	48	579	3
12:30 - 12:45	59	2	43	104	11	3	14	28	13	309	53	375	30	311	4	345	852	0
12:45 - 13:00	43	3	34	80	13	2	21	36	16	300	56	372	44	295	6	345	833	3
13:00 - 13:15	58	4	33	95	13	2	11	26	19	319	46	384	35	274	1	310	815	0
13:15 - 13:30	43	4	23	70	7	4	23	34	16	316	57	389	35	283	4	322	815	0
13:30 - 13:45	48	7	37	92	12	6	5	23	9	297	53	359	36	277	12	325	799	0
13:45 - 14:00	55	2	25	82	7	3	9	19	18	319	44	381	30	266	4	300	782	1
14:00 - 14:15	54	1	37	92	5	5	20	30	12	338	51	401	29	261	1	291	814	0
14:15 - 14:30	37	1	37	75	3	4	14	21	12	306	44	362	49	273	0	322	780	1
14:30 - 14:45	63	0	31	94	9	1	7	17	15	317	44	376	20	281	3	304	791	1
14:45 - 15:00	93	4	79	176	6	4	11	21	7	332	54	393	29	287	2	318	908	0
15:00 - 15:15	53	0	61	114	10	6	11	27	7	339	43	389	24	302	3	329	859	1
15:15 - 15:30	88	0	64	152	8	3	15	26	14	316	44	374	22	246	2	270	822	0
15:30 - 15:45	108	7	76	191	16	7	21	44	14	368	31	413	16	272	5	293	941	0
15:45 - 16:00	80	2	69	151	11	5	15	31	17	362	57	436	31	271	5	307	925	0
16:00 - 16:15	97	4	97	198	7	4	14	25	12	368	41	421	17	257	3	277	921	0
16:15 - 16:30	85	0	81	166	13	6	23	42	10	414	46	470	12	278	4	294	972	1
16:30 - 16:45	106	1	115	222	15	4	18	37	7	402	29	438	29	303	0	332	1029	0
16:45 - 17:00	97	3	84	184	12	6	13	31	8	433	49	490	12	285	2	299	1004	3
17:00 - 17:15	118	1	98	217	15	5	13	33	11	368	36	415	26	350	1	377	1042	1
17:15 - 17:30	96	2	56	154	16	5	18	39	13	379	46	438	29	331	1	361	992	0
17:30 - 17:45	108	0	66	174	3	4	11	18	3	348	36	387	26	314	0	340	919	0
17:45 - 18:00	56	1	45	102	15	4	9	28	10	344	49	403	23	317	1	341	874	1
18:00 - 18:15	56	3	38	97	10	2	9	21	3	352	32	387	19	272	1	292	797	2
18:15 - 18:30	43	0	24	67	9	1	3	13	9	324	31	364	19	245	1	265	709	0
18:30 - 18:45	37	1	29	67	7	0	3	10	5	277	38	320	35	196	0	231	628	0
18:45 - 19:00	23	0	20	43	5	0	6	11	8	218	34	260	20	151	0	171	485	0
TOTAL	2986	111	2047	5144	366	173	517	1056	592	14129	2335	17056	1778	13602	211	15591	38847	30
Trucks	53	4	17	74	2	1	6	9	4	486	48	538	15	505	3	523	1144	2.9%
School Buses	3	0	3	6	0	0	0	0	0	9	5	14	1	15	0	16	36	0.1%

TOTAL AND PEAK HOUR VOLUME DIAGRAMS

Sunset Blvd AT W. Hospital Dr-Sunset Ct Date: 12/1/2016

12.0 HOUR TOTAL VOLUME
FROM 7:00 TO 15:00

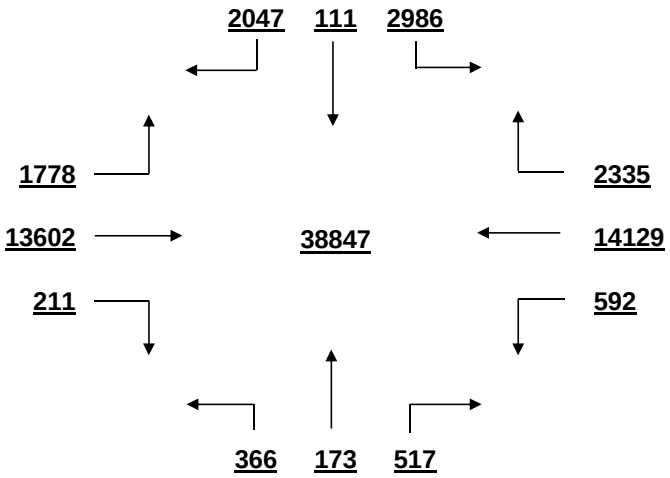

OVERALL PEAK HOUR VOLUME
FROM 16:30 TO 17:30

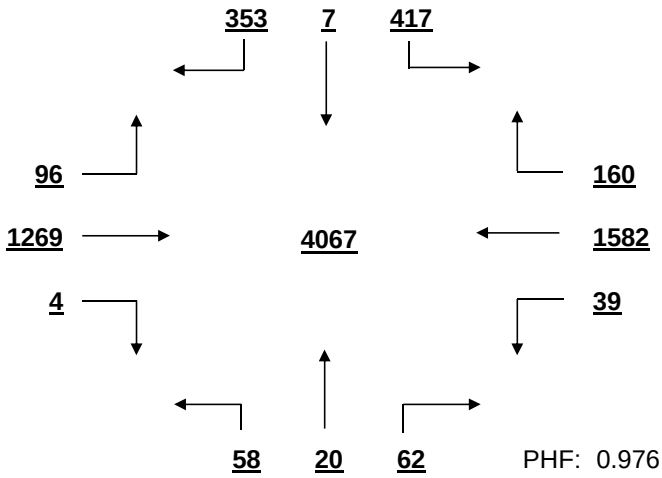

PHF: 0.976

AM PEAK HOUR VOLUME (0:00-10:45)
FROM 7:15 TO 8:15

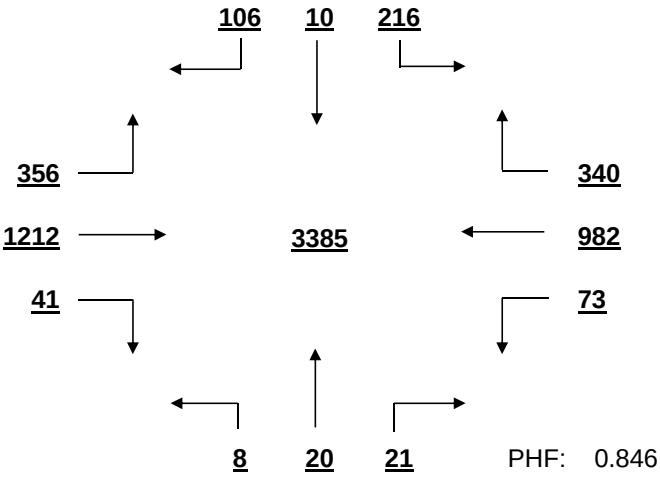

PHF: 0.846

PM PEAK HOUR VOLUME (14:15-23:45)
FROM 16:30 TO 17:30

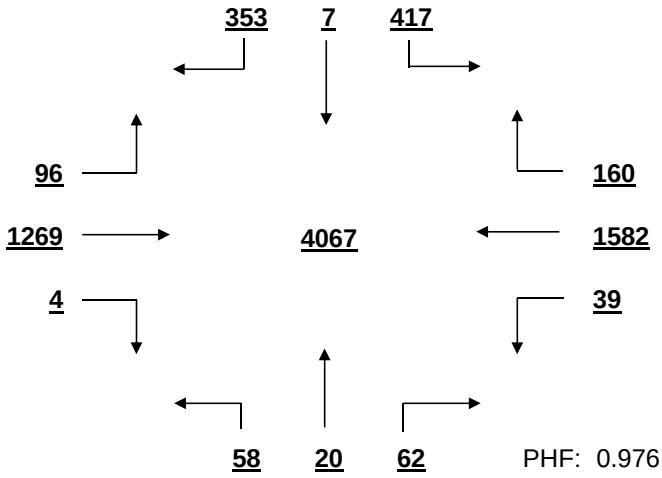

PHF: 0.976

MID-DAY PEAK HOUR VOLUME (11:00-14:00)
FROM 12:30 TO 13:30

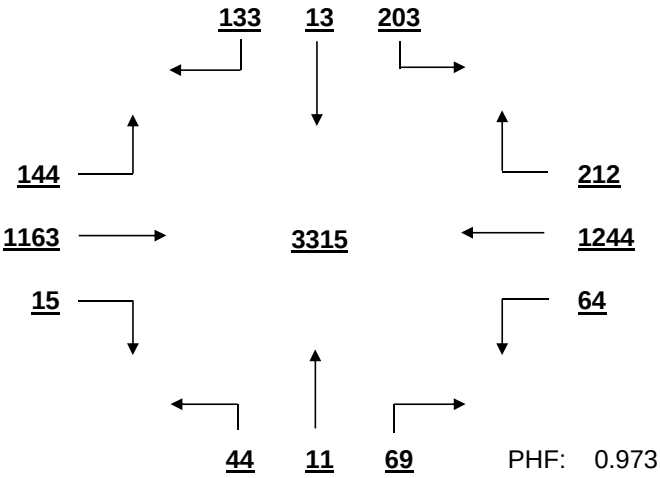

PHF: 0.973

OTHER HOUR VOLUME
FROM 7:00 TO 8:00

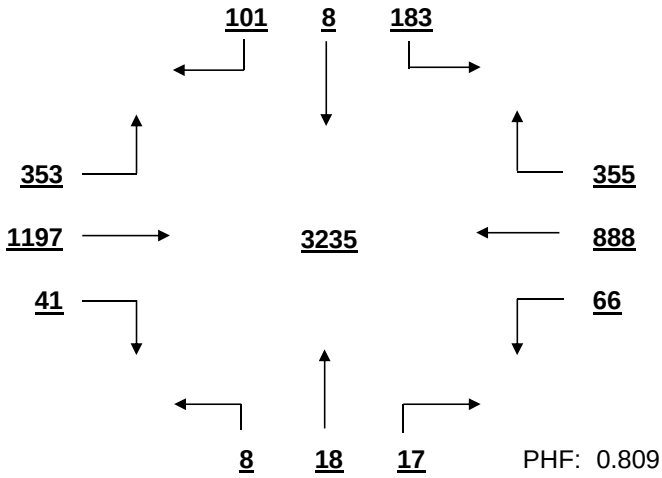

PHF: 0.809

SIGNAL WARRANT ANALYSIS

Sunset Blvd AT W. Hospital Dr-Sunset Ct Date: 12/1/2016

Minor Street Volume, percent of total = 16.0%
Percent of Left Turns from Minor Street = 54.1%
Percent of Right Turns from Minor Street = 41.4%
Percent of Minor Street Right Turns to Remove from Warrant Analysis = 0%
WARRANT BASIS = **100%**

Warrant No. 1 - Vehicular Volume is met

Condition A - Minimum Vehicular Volume is met

Average Major Street % of Warrant				Average Minor Street % of Warrant			
2720.6	/	600 =	453%	428.7	/	150 =	286%

Hourly percent of warrant

	7:00 - 8:00	8:00 - 9:00	9:00 - 10:00	10:00 - 11:00	11:00 - 12:00	12:00 - 13:00	13:00 - 14:00	14:00 - 15:00	15:00 - 16:00	16:00 - 17:00	17:00 - 18:00	18:00 - 19:00
Major St.	483%	511%	405%	406%	426%	423%	462%	461%	469%	504%	510%	382%
Minor St.	195%	180%	199%	239%	281%	287%	226%	291%	405%	513%	431%	183%

Condition B - Interruption to Continuous Traffic is met

Average Major Street % of Warrant				Average Minor Street % of Warrant			
2720.6	/	900 =	302%	428.7	/	75 =	572%

Hourly percent of warrant

	7:00 - 8:00	8:00 - 9:00	9:00 - 10:00	10:00 - 11:00	11:00 - 12:00	12:00 - 13:00	13:00 - 14:00	14:00 - 15:00	15:00 - 16:00	16:00 - 17:00	17:00 - 18:00	18:00 - 19:00
Major St.	322%	341%	270%	271%	284%	282%	308%	307%	312%	336%	340%	254%
Minor St.	389%	360%	397%	477%	561%	573%	452%	583%	811%	1027%	863%	365%

80% Combination of Conditions A & B is met

Warrant No. 2 - Four Hour Vehicular Volume is met

Hourly percent of warrant

	7:00 - 8:00	8:00 - 9:00	9:00 - 10:00	10:00 - 11:00	11:00 - 12:00	12:00 - 13:00	13:00 - 14:00	14:00 - 15:00	15:00 - 16:00	16:00 - 17:00	17:00 - 18:00	18:00 - 19:00
Minor St.	365%	338%	373%	448%	526%	538%	424%	546%	760%	963%	809%	343%

Warrant No. 3 - Peak Hour is met

Percent of warrant			Percent of warrant		
Overall Peak Hour:	16:30 - 17:30		Higher Volume Side Street Peak Hour:	16:15 - 17:15	
Minor St.	777%		Minor St.	789%	

Warrant No. 4 - Pedestrian Volume. Pedestrian volume shown are minumum volumes assuming heavy major street traffic. If these volumes are met, warrant 4 requires further engineering analysis

Minimum 4 hour ped. volume crossing major street	Minimum peak hour ped. volume crossing major street
107	133

Number of pedestrians crossing major street

	7:00 - 8:00	8:00 - 9:00	9:00 - 10:00	10:00 - 11:00	11:00 - 12:00	12:00 - 13:00	13:00 - 14:00	14:00 - 15:00	15:00 - 16:00	16:00 - 17:00	17:00 - 18:00	18:00 - 19:00
Major St.	0	2	1	0	2	4	0	0	0	0	0	1

Warrant No. 7 - Crash Experience (Requires 3 criteria analysis by engineering)

Total Number: 0 From: 1/1/2005 to 1/1/2008
Accident Rate: 0.00 per million entering vehicles

Types of Accidents	No.	/	Avg.		No.	/	Avg.
Right Angle	0	/	0.0	Rear End	0	/	0.0
Lost Control	0	/	0.0	Side Swipe	0	/	0.0
Left Turn	0	/	0.0	Other	0	/	0.0

SOUTH CAROLINA DEPARTMENT OF TRANSPORTATION
DISTRICT 1
TRAFFIC ENGINEERING

County: Richland City: Columbia Date: 12/1/2016

Major Rt: Sunset Blvd * Not on State System Minor Rt: E. Hospital Dr-Harbor Dr Clear

Day of Week: Thursday Weather: Clear Office: Short Counts JMS

Type of Control: Signal Speed Limit (major st) 40

Direction of Minor Street: N-S Intersection ADT - 40930 (Calc)

Number of Lanes (major st)* 2 Number of Lanes (minor st)* 1

* Each Direction

INTERSECTION VOLUME SUMMARY

	From N E. Hospital Dr-Har				From S E. Hospital Dr-Har				From E Sunset Blvd				From W Sunset Blvd				Total	Total
	LT	STR	RT	TOT	LT	STR	RT	TOT	LT	STR	RT	TOT	LT	STR	RT	TOT	Vol	Peds
7:00 - 7:15	23	0	9	32	6	12	26	44	19	229	89	337	21	329	10	360	773	0
7:15 - 7:30	37	2	8	47	17	9	39	65	15	317	84	416	25	414	18	457	985	0
7:30 - 7:45	52	3	10	65	8	9	44	61	26	341	86	453	28	423	21	472	1051	0
7:45 - 8:00	39	2	6	47	13	9	57	79	26	347	89	462	17	430	19	466	1054	0
8:00 - 8:15	43	4	18	65	17	6	53	76	29	301	74	404	40	352	13	405	950	1
8:15 - 8:30	31	2	0	33	11	7	55	73	28	343	79	450	37	438	7	482	1038	0
8:30 - 8:45	31	3	18	52	12	6	29	47	23	279	98	400	30	339	17	386	885	0
8:45 - 9:00	38	1	17	56	5	5	27	37	23	273	70	366	31	333	18	382	841	0
9:00 - 9:15	44	4	13	61	13	4	17	34	29	234	65	328	23	287	16	326	749	0
9:15 - 9:30	41	4	21	66	10	3	30	43	20	247	67	334	34	304	18	356	799	0
9:30 - 9:45	30	7	16	53	16	4	27	47	15	247	71	333	35	290	12	337	770	0
9:45 - 10:00	56	6	31	93	18	2	32	52	23	247	72	342	19	292	16	327	814	0
10:00 - 10:15	51	2	28	81	0	5	0	5	17	223	55	295	25	283	15	323	704	4
10:15 - 10:30	54	1	13	68	13	6	21	40	18	260	74	352	31	298	17	346	806	2
10:30 - 10:45	48	2	30	80	16	11	44	71	21	277	50	348	26	286	21	333	832	0
10:45 - 11:00	48	8	27	83	10	3	17	30	20	259	71	350	36	304	18	358	821	3
11:00 - 11:15	54	4	34	92	13	5	26	44	18	291	55	364	19	318	16	353	853	2
11:15 - 11:30	40	7	26	73	14	3	20	37	18	256	63	337	13	303	15	331	778	2
11:30 - 11:45	71	2	44	117	17	5	24	46	27	278	42	347	21	340	17	378	888	1
11:45 - 12:00	78	1	40	119	12	8	25	45	23	254	58	335	13	344	17	374	873	2
12:00 - 12:15	76	1	31	108	18	3	27	48	20	297	48	365	20	353	16	389	910	0
12:15 - 12:30	61	6	22	89	23	7	28	58	14	309	68	391	27	347	22	396	934	7
12:30 - 12:45	65	2	28	95	16	4	22	42	28	330	64	422	18	346	14	378	937	0
12:45 - 13:00	47	4	21	72	14	5	23	42	35	342	69	446	29	295	19	343	903	0
13:00 - 13:15	36	4	25	65	13	5	28	46	23	342	73	438	34	297	23	354	903	0
13:15 - 13:30	44	4	37	85	14	6	16	36	22	330	75	427	31	315	10	356	904	0
13:30 - 13:45	68	2	33	103	12	9	29	50	12	330	57	399	26	288	16	330	882	0
13:45 - 14:00	50	1	27	78	16	8	24	48	30	348	75	453	21	283	16	320	899	6
14:00 - 14:15	61	4	34	99	16	5	34	55	20	356	72	448	16	332	14	362	964	0
14:15 - 14:30	68	4	34	106	6	3	30	39	27	321	52	400	26	269	23	318	863	1
14:30 - 14:45	69	3	40	112	17	5	27	49	19	331	53	403	20	308	15	343	907	0
14:45 - 15:00	75	3	28	106	22	2	30	54	17	329	55	401	26	321	14	361	922	0
15:00 - 15:15	81	6	28	115	11	1	35	47	34	336	53	423	10	340	12	362	947	1
15:15 - 15:30	84	0	27	111	13	3	25	41	36	321	65	422	16	324	9	349	923	0
15:30 - 15:45	81	2	28	111	18	3	33	54	28	357	48	433	9	358	19	386	984	0
15:45 - 16:00	75	5	35	115	23	4	28	55	26	345	38	409	17	339	18	374	953	0
16:00 - 16:15	72	14	31	117	14	4	36	54	17	342	41	400	9	335	12	356	927	1
16:15 - 16:30	74	9	38	121	16	2	28	46	23	379	43	445	18	348	14	380	992	0
16:30 - 16:45	81	3	33	117	9	1	28	38	25	347	39	411	12	368	15	395	961	0
16:45 - 17:00	70	8	33	111	8	3	41	52	33	402	38	473	10	380	19	409	1045	0
17:00 - 17:15	86	4	21	111	18	2	23	43	25	350	36	411	8	405	25	438	1003	0
17:15 - 17:30	72	9	20	101	16	3	23	42	43	379	30	452	11	426	22	459	1054	0
17:30 - 17:45	63	6	20	89	12	2	24	38	43	362	39	444	7	393	17	417	988	0
17:45 - 18:00	31	2	9	42	10	4	19	33	31	358	42	431	10	346	19	375	881	0
18:00 - 18:15	43	8	15	66	14	5	20	39	30	303	57	390	7	301	17	325	820	0
18:15 - 18:30	43	0	18	61	14	6	30	50	33	326	36	395	12	274	15	301	807	1
18:30 - 18:45	44	1	14	59	12	2	16	30	23	292	56	371	14	218	9	241	701	2
18:45 - 19:00	33	0	17	50	9	5	20	34	14	239	41	294	8	172	4	184	562	0
TOTAL	2662	180	1156	3998	645	234	1360	2239	1169	14906	2875	18950	996	15788	769	17553	42740	36
Trucks	19	4	19	42	19	2	55	76	47	493	16	556	14	500	21	535	1209	2.8%
School Buses	2	0	0	2	2	0	15	17	9	24	1	34	0	27	3	30	83	0.2%

TOTAL AND PEAK HOUR VOLUME DIAGRAMS

Sunset Blvd AT E. Hospital Dr-Harbor Dr Date: 12/1/2016

12.0 HOUR TOTAL VOLUME
FROM 7:00 TO 15:00

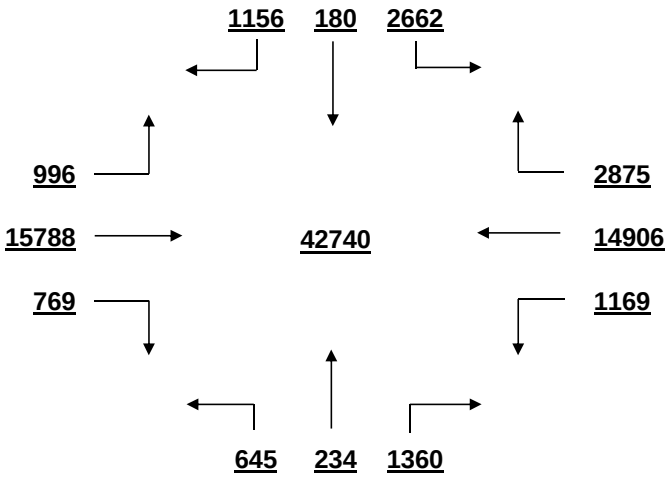

OVERALL PEAK HOUR VOLUME
FROM 7:30 TO 8:30

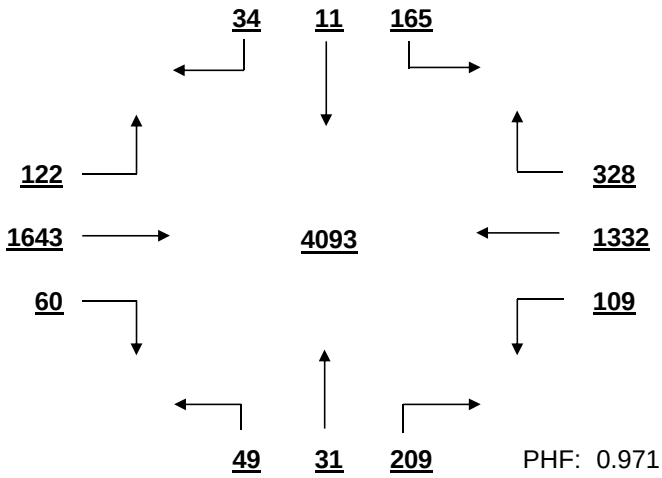

PHF: 0.971

AM PEAK HOUR VOLUME (0:00-10:45)
FROM 7:30 TO 8:30

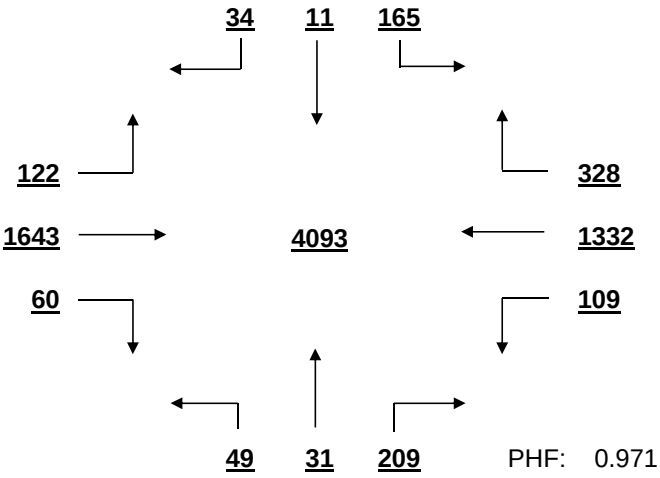

PHF: 0.971

PM PEAK HOUR VOLUME (14:15-23:45)
FROM 16:45 TO 17:45

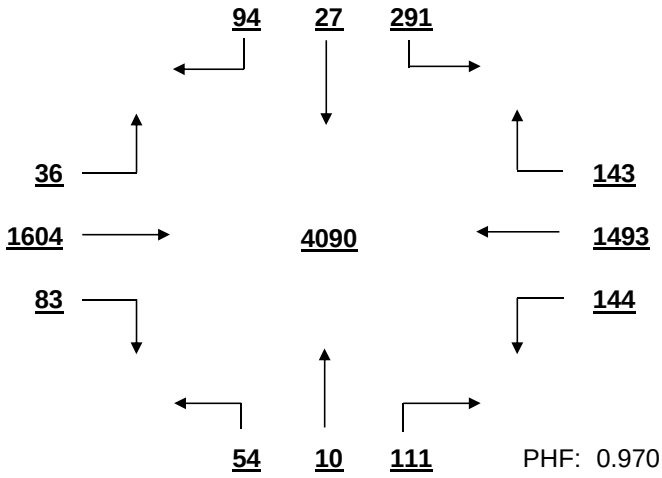

PHF: 0.970

MID-DAY PEAK HOUR VOLUME (11:00-14:00)
FROM 12:00 TO 13:00

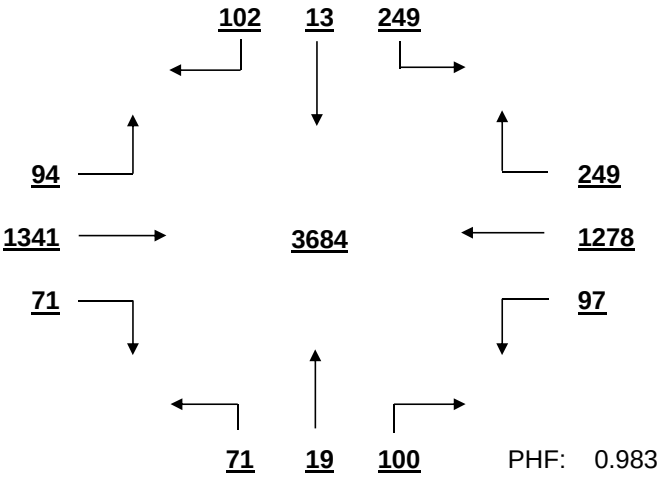

PHF: 0.983

OTHER HOUR VOLUME
FROM 7:00 TO 8:00

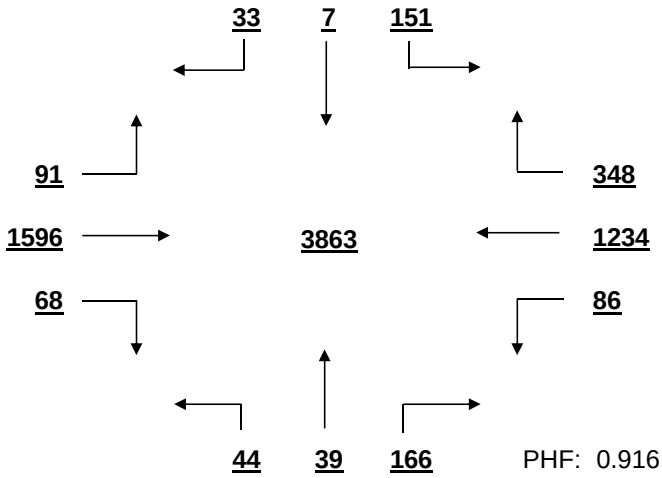

PHF: 0.916

SIGNAL WARRANT ANALYSIS

Sunset Blvd AT E. Hospital Dr-Harbor Dr Date: 12/1/2016

Minor Street Volume, percent of total = 14.6%
Percent of Left Turns from Minor Street = 53.0%
Percent of Right Turns from Minor Street = 40.3%
Percent of Minor Street Right Turns to Remove from Warrant Analysis = 0%
WARRANT BASIS = **100%**

Warrant No. 1 - Vehicular Volume is met

Condition A - Minimum Vehicular Volume is met

Average Major Street % of Warrant				Average Minor Street % of Warrant			
3041.9	/ 600	=	507%	333.2	/ 150	=	222%

Hourly percent of warrant

	7:00 - 8:00	8:00 - 9:00	9:00 - 10:00	10:00 - 11:00	11:00 - 12:00	12:00 - 13:00	13:00 - 14:00	14:00 - 15:00	15:00 - 16:00	16:00 - 17:00	17:00 - 18:00	18:00 - 19:00
Major St.	571%	546%	447%	451%	470%	522%	513%	506%	526%	545%	571%	417%
Minor St.	166%	155%	182%	208%	267%	243%	221%	282%	301%	311%	229%	157%

Condition B - Interruption to Continuous Traffic is met

Average Major Street % of Warrant				Average Minor Street % of Warrant			
3041.9	/ 900	=	338%	333.2	/ 75	=	444%

Hourly percent of warrant

	7:00 - 8:00	8:00 - 9:00	9:00 - 10:00	10:00 - 11:00	11:00 - 12:00	12:00 - 13:00	13:00 - 14:00	14:00 - 15:00	15:00 - 16:00	16:00 - 17:00	17:00 - 18:00	18:00 - 19:00
Major St.	380%	364%	298%	301%	313%	348%	342%	337%	351%	363%	381%	278%
Minor St.	332%	311%	364%	416%	535%	485%	441%	564%	603%	621%	457%	315%

80% Combination of Conditions A & B is met

Warrant No. 2 - Four Hour Vehicular Volume is met

Hourly percent of warrant

	7:00 - 8:00	8:00 - 9:00	9:00 - 10:00	10:00 - 11:00	11:00 - 12:00	12:00 - 13:00	13:00 - 14:00	14:00 - 15:00	15:00 - 16:00	16:00 - 17:00	17:00 - 18:00	18:00 - 19:00
Minor St.	311%	291%	341%	390%	501%	455%	414%	529%	565%	583%	429%	295%

Warrant No. 3 - Peak Hour is met

	Percent of warrant		Percent of warrant
Overall Peak Hour:	7:30 - 8:30	Higher Volume Side Street Peak Hour:	15:45 - 16:45
Minor St.	289%	Minor St.	470%

Warrant No. 4 - Pedestrian Volume. Pedestrian volume shown are minumum volumes assuming heavy major street traffic. If these volumes are met, warrant 4 requires further engineering analysis

Minimum 4 hour ped. volume crossing major street: 107

Minimum peak hour ped. volume crossing major street: 133

Number of pedestrians crossing major street

	7:00 - 8:00	8:00 - 9:00	9:00 - 10:00	10:00 - 11:00	11:00 - 12:00	12:00 - 13:00	13:00 - 14:00	14:00 - 15:00	15:00 - 16:00	16:00 - 17:00	17:00 - 18:00	18:00 - 19:00
Major St.	0	0	0	5	4	4	3	0	0	0	0	1

Warrant No. 7 - Crash Experience (Requires 3 criteria analysis by engineering)

Total Number: 0 From: 1/1/2005 to 1/1/2008

Accident Rate: 0.00 per million entering vehicles

Types of Accidents	No.	/	Avg.		No.	/	Avg.
Right Angle	0	/	0.0	Rear End	0	/	0.0
Lost Control	0	/	0.0	Side Swipe	0	/	0.0
Left Turn	0	/	0.0	Other	0	/	0.0

SOUTH CAROLINA DEPARTMENT OF TRANSPORTATION
DISTRICT 1
TRAFFIC ENGINEERING

County: Richland City: Columbia Date: 12/1/2016

Major Rt: Sunset Blvd * Not on State System Minor Rt: McSwain Dr-Chris Dr Clear

Day of Week: Thursday Weather: Clear Office: Short Counts JMS

Type of Control: Signal Speed Limit (major st) 40

Direction of Minor Street: N-S Intersection ADT - 34870 (Calc)

Number of Lanes (major st)* 2 Number of Lanes (minor st)* 1

* Each Direction

INTERSECTION VOLUME SUMMARY

	From N McSwain Dr-Chris D				From S McSwain Dr-Chris D				From E Sunset Blvd				From W Sunset Blvd				Total	Total
	LT	STR	RT	TOT	LT	STR	RT	TOT	LT	STR	RT	TOT	LT	STR	RT	TOT	Vol	Peds
7:00 - 7:15	12	7	23	42	42	2	13	57	15	146	3	164	13	280	24	317	580	2
7:15 - 7:30	6	7	21	34	30	3	12	45	13	220	2	235	18	350	0	368	682	0
7:30 - 7:45	13	2	28	43	48	4	21	73	20	250	7	277	14	416	42	472	865	1
7:45 - 8:00	9	3	22	34	45	6	19	70	14	264	6	284	31	0	49	80	468	0
8:00 - 8:15	7	4	14	25	41	8	16	65	17	218	4	239	33	371	35	439	768	1
8:15 - 8:30	7	6	0	13	53	3	13	69	8	246	8	262	28	372	52	452	796	0
8:30 - 8:45	5	1	32	38	39	3	17	59	5	210	6	221	37	320	44	401	719	3
8:45 - 9:00	5	0	26	31	46	4	15	65	13	168	9	190	22	297	48	367	653	1
9:00 - 9:15	5	3	19	27	41	2	11	54	9	176	4	189	25	239	39	303	573	2
9:15 - 9:30	5	3	18	26	49	6	18	73	15	183	4	202	14	250	36	300	601	0
9:30 - 9:45	9	5	15	29	43	2	14	59	11	234	5	250	10	244	36	290	628	0
9:45 - 10:00	2	2	10	14	48	2	12	62	13	188	5	206	18	269	29	316	598	3
10:00 - 10:15	4	6	12	22	0	5	0	5	14	192	8	214	16	214	30	260	501	0
10:15 - 10:30	8	3	14	25	45	1	11	57	12	211	10	233	22	258	44	324	639	0
10:30 - 10:45	12	5	20	37	66	8	16	90	17	229	8	254	20	241	27	288	669	1
10:45 - 11:00	12	3	19	34	40	4	20	64	9	212	7	228	12	255	33	300	626	2
11:00 - 11:15	14	5	44	63	30	3	23	56	10	213	3	226	14	258	34	306	651	1
11:15 - 11:30	8	4	22	34	29	1	24	54	14	272	6	292	18	299	36	353	733	1
11:30 - 11:45	7	6	15	28	42	4	20	66	6	269	5	280	19	313	36	368	742	0
11:45 - 12:00	14	3	21	38	47	4	19	70	14	239	2	255	20	312	40	372	735	1
12:00 - 12:15	8	3	19	30	45	4	21	70	14	296	6	316	26	358	38	422	838	3
12:15 - 12:30	9	2	17	28	37	6	15	58	13	292	7	312	20	0	28	48	446	0
12:30 - 12:45	14	6	15	35	56	1	31	88	18	348	5	371	25	359	30	414	908	2
12:45 - 13:00	7	7	20	34	58	6	38	102	18	345	6	369	19	295	41	355	860	7
13:00 - 13:15	6	4	16	26	49	4	25	78	32	313	5	350	24	288	42	354	808	1
13:15 - 13:30	6	3	17	26	47	5	19	71	20	337	11	368	25	281	41	347	812	2
13:30 - 13:45	3	9	18	30	44	1	13	58	22	322	15	359	24	252	35	311	758	3
13:45 - 14:00	8	2	19	29	49	6	14	69	16	320	13	349	27	253	32	312	759	0
14:00 - 14:15	6	2	22	30	44	6	17	67	17	298	6	321	19	297	39	355	773	0
14:15 - 14:30	6	2	19	27	38	2	13	53	18	305	5	328	27	263	0	290	698	1
14:30 - 14:45	3	4	16	23	37	5	17	59	16	300	3	319	21	249	41	311	712	0
14:45 - 15:00	7	7	18	32	46	3	30	79	22	339	4	365	20	287	31	338	814	3
15:00 - 15:15	9	5	33	47	40	4	9	53	12	322	9	343	20	287	35	342	785	0
15:15 - 15:30	11	0	15	26	39	5	23	67	18	305	7	330	23	300	29	352	775	0
15:30 - 15:45	11	3	20	34	36	5	14	55	12	340	8	360	24	320	33	377	826	1
15:45 - 16:00	6	3	21	30	38	9	20	67	16	322	8	346	18	332	27	377	820	1
16:00 - 16:15	9	4	35	48	43	2	16	61	13	363	5	381	25	267	34	326	816	1
16:15 - 16:30	12	4	31	47	31	4	15	50	13	354	3	370	16	312	26	354	821	3
16:30 - 16:45	2	3	22	27	55	4	32	91	16	356	10	382	17	291	31	339	839	0
16:45 - 17:00	7	6	29	42	35	1	18	54	18	366	9	393	20	330	32	382	871	0
17:00 - 17:15	12	8	38	58	60	4	23	87	15	368	7	390	31	308	23	362	897	2
17:15 - 17:30	13	5	21	39	35	5	24	64	20	360	8	388	24	333	32	389	880	6
17:30 - 17:45	8	3	19	30	36	0	26	62	17	333	5	355	10	307	28	345	792	1
17:45 - 18:00	4	8	18	30	29	1	20	50	15	302	7	324	17	321	21	359	763	1
18:00 - 18:15	3	2	17	22	45	3	20	68	11	310	8	329	18	290	25	333	752	0
18:15 - 18:30	6	0	11	17	18	3	19	40	16	295	4	315	17	273	13	303	675	3
18:30 - 18:45	3	3	13	19	29	6	11	46	15	263	3	281	12	221	16	249	595	6
18:45 - 19:00	7	0	8	15	21	0	16	37	12	230	7	249	15	198	17	230	531	11
TOTAL	370	186	962	1518	1964	180	873	3017	714	13344	306	14364	988	13430	1534	15952	34851	77
Trucks	3	1	14	18	105	1	23	129	11	278	5	294	9	252	125	386	827	2.4%
School Buses	0	1	1	2	0	1	1	2	0	22	2	24	0	25	3	28	56	0.2%

TOTAL AND PEAK HOUR VOLUME DIAGRAMS

Sunset Blvd AT McSwain Dr-Chris Dr Date: 12/1/2016

12.0 HOUR TOTAL VOLUME
FROM 7:00 TO 15:00

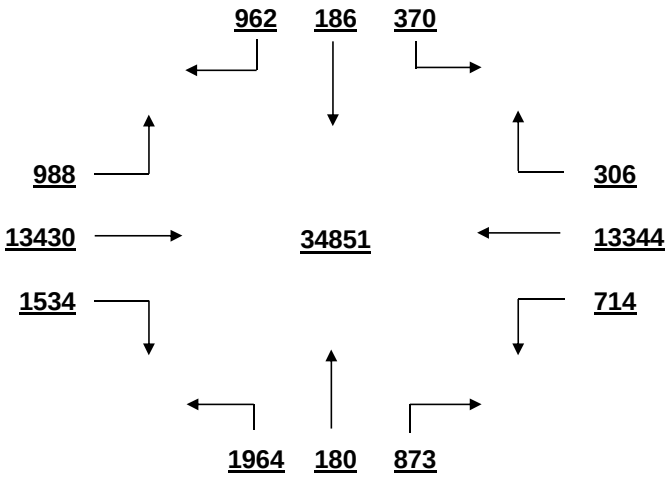

OVERALL PEAK HOUR VOLUME
FROM 16:30 TO 17:30

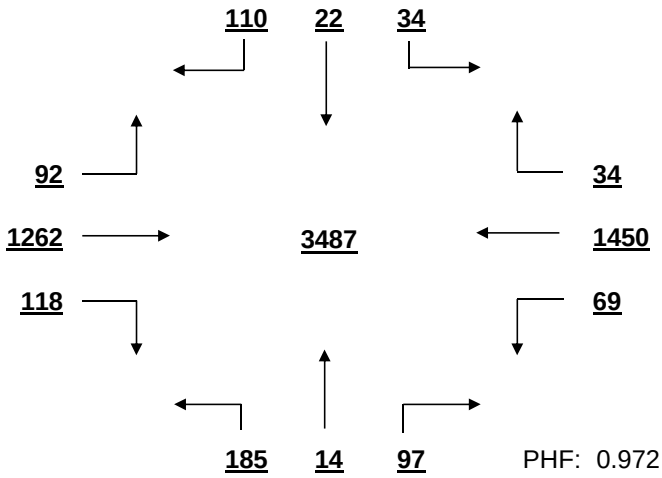

PHF: 0.972

AM PEAK HOUR VOLUME (0:00-10:45)
FROM 8:00 TO 9:00

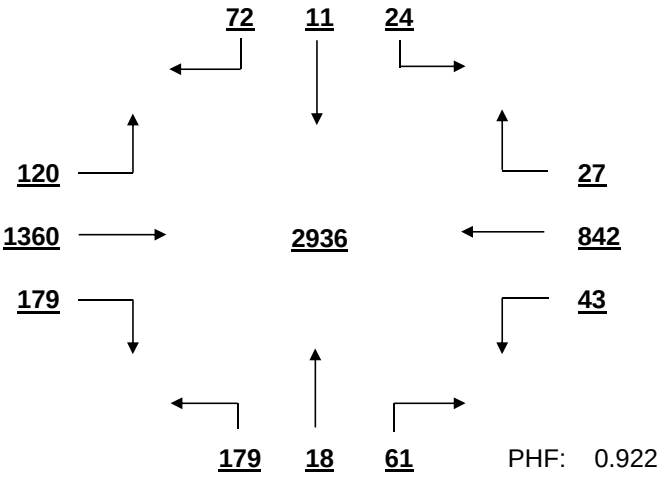

PHF: 0.922

PM PEAK HOUR VOLUME (14:15-23:45)
FROM 16:30 TO 17:30

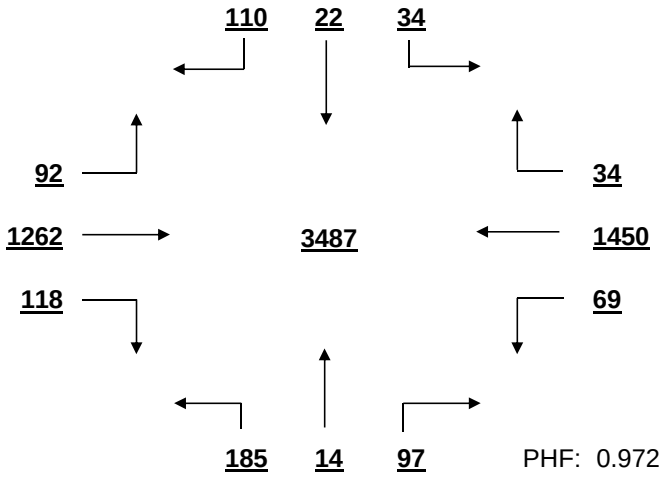

PHF: 0.972

MID-DAY PEAK HOUR VOLUME (11:00-14:00)
FROM 12:30 TO 13:30

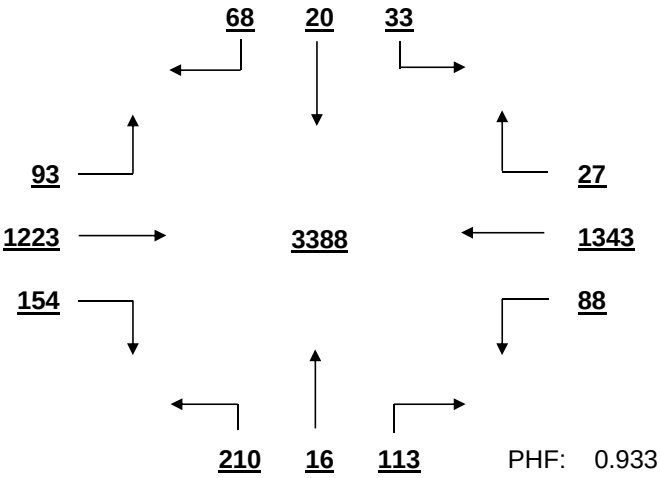

PHF: 0.933

OTHER HOUR VOLUME
FROM 7:00 TO 8:00

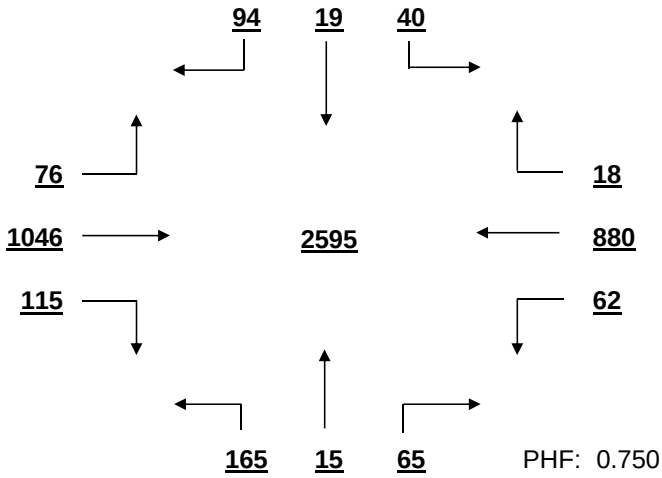

PHF: 0.750

SIGNAL WARRANT ANALYSIS

Sunset Blvd AT McSwain Dr-Chris Dr Date: 12/1/2016

Minor Street Volume, percent of total = 13.0%
Percent of Left Turns from Minor Street = 51.5%
Percent of Right Turns from Minor Street = 40.5%
Percent of Minor Street Right Turns to Remove from Warrant Analysis = 0%
WARRANT BASIS = **100%**

Warrant No. 1 - Vehicular Volume is met

Condition A - Minimum Vehicular Volume is met

Average Major Street % of Warrant				Average Minor Street % of Warrant			
2526.3	/ 600	=	421%	251.4	/ 150	=	168%

Hourly percent of warrant

	7:00 - 8:00	8:00 - 9:00	9:00 - 10:00	10:00 - 11:00	11:00 - 12:00	12:00 - 13:00	13:00 - 14:00	14:00 - 15:00	15:00 - 16:00	16:00 - 17:00	17:00 - 18:00	18:00 - 19:00
Major St.	366%	429%	343%	350%	409%	435%	458%	438%	471%	488%	485%	382%
Minor St.	163%	172%	165%	144%	164%	212%	184%	172%	161%	171%	175%	127%

Condition B - Interruption to Continuous Traffic is met

Average Major Street % of Warrant				Average Minor Street % of Warrant			
2526.3	/ 900	=	281%	251.4	/ 75	=	335%

Hourly percent of warrant

	7:00 - 8:00	8:00 - 9:00	9:00 - 10:00	10:00 - 11:00	11:00 - 12:00	12:00 - 13:00	13:00 - 14:00	14:00 - 15:00	15:00 - 16:00	16:00 - 17:00	17:00 - 18:00	18:00 - 19:00
Major St.	244%	286%	228%	233%	272%	290%	306%	292%	314%	325%	324%	254%
Minor St.	327%	344%	331%	288%	328%	424%	368%	344%	323%	341%	351%	255%

80% Combination of Conditions A & B is met

Warrant No. 2 - Four Hour Vehicular Volume is met

Hourly percent of warrant

	7:00 - 8:00	8:00 - 9:00	9:00 - 10:00	10:00 - 11:00	11:00 - 12:00	12:00 - 13:00	13:00 - 14:00	14:00 - 15:00	15:00 - 16:00	16:00 - 17:00	17:00 - 18:00	18:00 - 19:00
Minor St.	306%	323%	310%	270%	308%	398%	345%	323%	303%	320%	329%	239%

Warrant No. 3 - Peak Hour is met

Percent of warrant			Percent of warrant		
Overall Peak Hour:	16:30 - 17:30		Higher Volume Side Street Peak Hour:	12:30 - 13:30	
Minor St.	296%		Minor St.	339%	

Warrant No. 4 - Pedestrian Volume. Pedestrian volume shown are minumum volumes assuming heavy major street traffic. If these volumes are met, warrant 4 requires further engineering analysis

Minimum 4 hour ped. volume crossing major street	Minimum peak hour ped. volume crossing major street
107	133

Number of pedestrians crossing major street

	7:00 - 8:00	8:00 - 9:00	9:00 - 10:00	10:00 - 11:00	11:00 - 12:00	12:00 - 13:00	13:00 - 14:00	14:00 - 15:00	15:00 - 16:00	16:00 - 17:00	17:00 - 18:00	18:00 - 19:00
Major St.	1	3	3	1	0	4	2	1	0	0	5	6

Warrant No. 7 - Crash Experience (Requires 3 criteria analysis by engineering)

Total Number: 0 From: 1/1/2005 to 1/1/2008
Accident Rate: 0.00 per million entering vehicles

Types of Accidents	No.	/	Avg.		No.	/	Avg.
Right Angle	0	/	0.0	Rear End	0	/	0.0
Lost Control	0	/	0.0	Side Swipe	0	/	0.0
Left Turn	0	/	0.0	Other	0	/	0.0

SOUTH CAROLINA DEPARTMENT OF TRANSPORTATION
DISTRICT 1
TRAFFIC ENGINEERING

County: Richland City: Columbia Date: 12/1/2016

Major Rt: Sunset Blvd * Not on State System Minor Rt: Whippoorwill Dr-Kleckley Dr Clear

Day of Week: Thursday Weather: Clear Office: Short Counts JMS

Type of Control: Signal Speed Limit (major st) 40

Direction of Minor Street: N-S Intersection ADT - 30760 (Calc)

Number of Lanes (major st)* 2 Number of Lanes (minor st)* 1

* Each Direction

INTERSECTION VOLUME SUMMARY

	From N Whippoorwill Dr-Kl				From S Whippoorwill Dr-Kl				From E Sunset Blvd				From W Sunset Blvd				Total	Total
	LT	STR	RT	TOT	LT	STR	RT	TOT	LT	STR	RT	TOT	LT	STR	RT	TOT	Vol	Peds
7:00 - 7:15	5	0	23	28	0	0	0	0	0	140	0	140	11	285	0	296	464	1
7:15 - 7:30	6	0	25	31	0	0	1	1	1	191	4	196	4	342	0	346	574	2
7:30 - 7:45	13	0	28	41	1	0	0	1	1	232	6	239	11	405	0	416	697	0
7:45 - 8:00	9	0	23	32	0	0	0	0	1	283	6	290	10	0	2	12	334	0
8:00 - 8:15	4	0	24	28	3	0	1	4	1	223	3	227	12	390	1	403	662	0
8:15 - 8:30	11	0	0	11	5	0	1	6	1	224	6	231	5	366	2	373	621	0
8:30 - 8:45	10	0	6	16	1	0	1	2	2	227	5	234	13	301	1	315	567	0
8:45 - 9:00	7	0	13	20	1	0	4	5	2	168	6	176	15	300	1	316	517	2
9:00 - 9:15	8	0	14	22	5	0	2	7	2	182	2	186	9	228	2	239	454	0
9:15 - 9:30	13	0	17	30	5	0	2	7	1	187	4	192	16	242	2	260	489	0
9:30 - 9:45	3	1	22	26	9	0	3	12	2	205	6	213	9	268	0	277	528	0
9:45 - 10:00	10	2	22	34	3	0	1	4	3	180	8	191	11	258	1	270	499	3
10:00 - 10:15	12	1	19	32	0	1	0	1	7	176	8	191	14	206	2	222	446	0
10:15 - 10:30	5	1	20	26	6	0	2	8	1	189	7	197	13	257	1	271	502	0
10:30 - 10:45	10	0	26	36	4	0	3	7	1	224	3	228	20	239	0	259	530	2
10:45 - 11:00	7	1	15	23	5	0	3	8	9	202	4	215	22	268	3	293	539	3
11:00 - 11:15	12	2	15	29	9	0	12	21	1	226	6	233	14	271	2	287	570	0
11:15 - 11:30	9	0	20	29	7	1	10	18	3	260	12	275	22	278	0	300	622	0
11:30 - 11:45	10	2	23	35	10	1	4	15	4	238	9	251	21	311	1	333	634	2
11:45 - 12:00	6	3	31	40	3	1	1	5	0	208	10	218	25	302	1	328	591	0
12:00 - 12:15	12	1	27	40	6	4	5	15	3	261	10	274	38	329	1	368	697	2
12:15 - 12:30	17	0	30	47	2	1	4	7	4	293	7	304	27	0	3	30	388	0
12:30 - 12:45	21	0	27	48	5	2	8	15	3	333	10	346	36	359	2	397	806	0
12:45 - 13:00	21	1	37	59	9	2	6	17	5	313	15	333	25	291	0	316	725	0
13:00 - 13:15	18	0	31	49	8	2	3	13	3	315	11	329	28	287	0	315	706	0
13:15 - 13:30	14	0	29	43	6	1	7	14	4	306	10	320	25	269	2	296	673	1
13:30 - 13:45	25	3	44	72	9	1	8	18	2	313	15	330	21	236	3	260	680	0
13:45 - 14:00	14	5	28	47	7	2	5	14	6	309	19	334	15	236	2	253	648	0
14:00 - 14:15	21	0	37	58	7	1	8	16	5	294	10	309	20	280	3	303	686	2
14:15 - 14:30	7	0	16	23	6	4	3	13	4	277	19	300	25	245	0	270	606	2
14:30 - 14:45	16	0	26	42	2	0	7	9	3	290	8	301	21	232	0	253	605	0
14:45 - 15:00	10	1	44	55	5	2	10	17	6	280	9	295	22	283	0	305	672	2
15:00 - 15:15	10	0	19	29	5	1	3	9	2	342	13	357	28	267	0	295	690	2
15:15 - 15:30	12	0	19	31	7	4	6	17	2	288	14	304	26	299	2	327	679	1
15:30 - 15:45	10	0	25	35	3	0	7	10	7	339	14	360	15	308	1	324	729	2
15:45 - 16:00	9	1	31	41	7	1	5	13	5	294	12	311	29	322	0	351	716	1
16:00 - 16:15	18	1	23	42	6	4	8	18	7	358	12	377	21	259	2	282	719	0
16:15 - 16:30	13	0	24	37	5	1	7	13	4	321	9	334	33	290	0	323	707	1
16:30 - 16:45	8	0	27	35	5	0	5	10	8	342	9	359	28	288	1	317	721	4
16:45 - 17:00	18	1	28	47	12	3	10	25	5	352	12	369	32	317	1	350	791	0
17:00 - 17:15	13	1	18	32	6	1	12	19	7	355	12	374	24	328	1	353	778	3
17:15 - 17:30	15	1	17	33	11	2	7	20	3	364	12	379	25	319	2	346	778	0
17:30 - 17:45	12	2	19	33	7	3	4	14	5	326	15	346	36	300	0	336	729	1
17:45 - 18:00	16	2	26	44	3	3	4	10	4	286	11	301	22	314	3	339	694	2
18:00 - 18:15	10	2	13	25	9	4	8	21	8	302	15	325	26	295	0	321	692	4
18:15 - 18:30	11	0	22	33	7	2	7	16	4	289	5	298	25	253	0	278	625	1
18:30 - 18:45	9	3	18	30	11	0	3	14	5	257	12	274	16	229	2	247	565	1
18:45 - 19:00	4	1	12	17	2	1	2	5	2	218	15	235	19	185	1	205	462	3
TOTAL	554	39	1103	1696	255	56	223	534	169	12782	450	13401	985	13137	54	14176	29807	50
Trucks	3	0	16	19	0	0	3	3	1	270	7	278	12	259	1	272	572	1.9%
School Buses	0	0	2	2	0	0	0	0	0	60	1	61	2	51	0	53	116	0.4%

TOTAL AND PEAK HOUR VOLUME DIAGRAMS

Sunset Blvd AT Whippoorwill Dr-Kleckley Dr Date: 12/1/2016

12.0 HOUR TOTAL VOLUME
FROM 7:00 TO 15:00

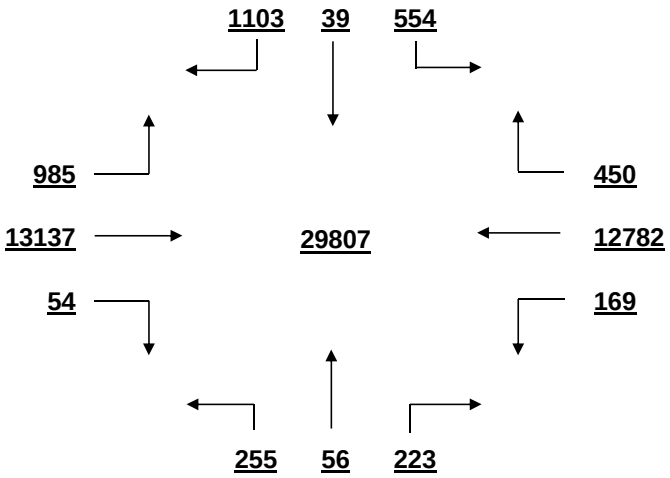

OVERALL PEAK HOUR VOLUME
FROM 16:45 TO 17:45

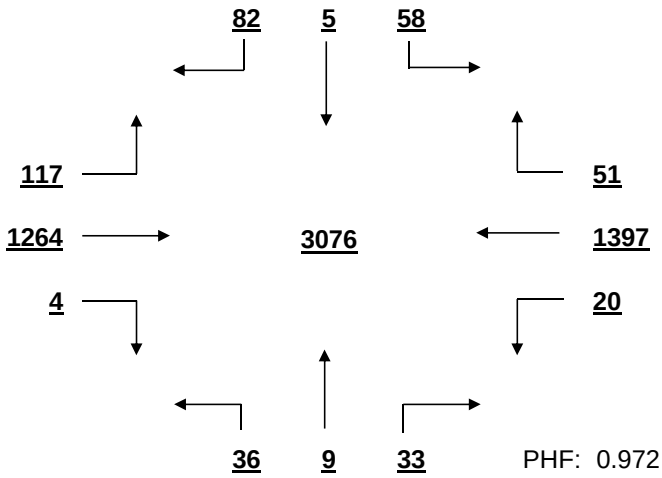

PHF: 0.972

AM PEAK HOUR VOLUME (0:00-10:45)
FROM 8:00 TO 9:00

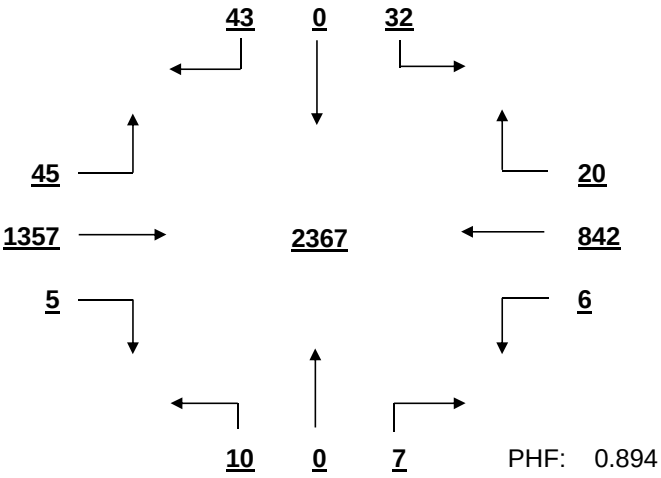

PHF: 0.894

PM PEAK HOUR VOLUME (14:15-23:45)
FROM 16:45 TO 17:45

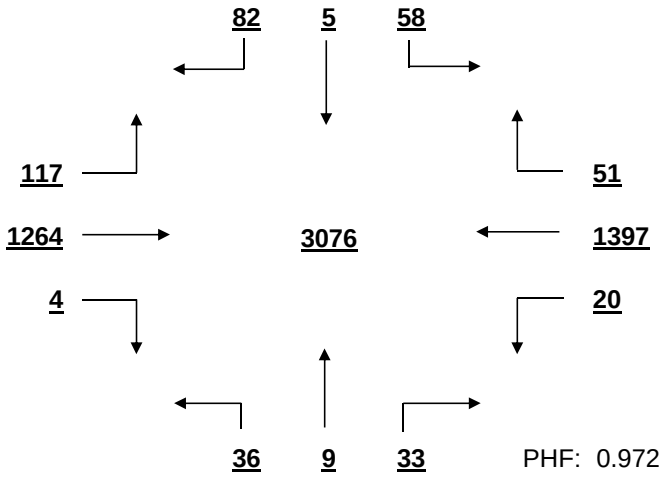

PHF: 0.972

MID-DAY PEAK HOUR VOLUME (11:00-14:00)
FROM 12:30 TO 13:30

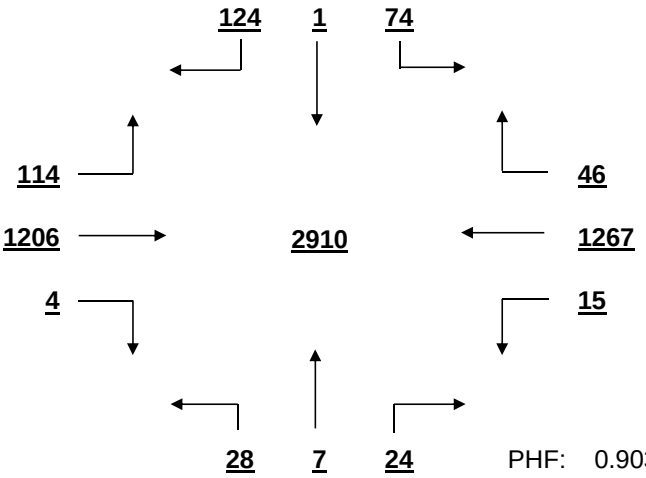

PHF: 0.903

OTHER HOUR VOLUME
FROM 7:00 TO 8:00

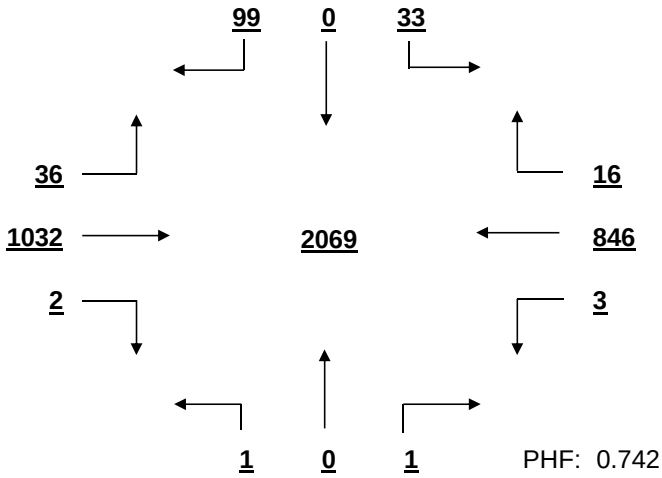

PHF: 0.742

SIGNAL WARRANT ANALYSIS

Sunset Blvd AT Whippoorwill Dr-Kleckley Dr Date: 12/1/2016

Minor Street Volume, percent of total = 7.5%
Percent of Left Turns from Minor Street = 36.3%
Percent of Right Turns from Minor Street = 59.5%
Percent of Minor Street Right Turns to Remove from Warrant Analysis = 0%
WARRANT BASIS = **100%**

Warrant No. 1 - Vehicular Volume is met

Condition A - Minimum Vehicular Volume is not met

Average Major Street % of Warrant				Average Minor Street % of Warrant			
2298.1	/ 600	=	383%	141.3	/ 150	=	94%

Hourly percent of warrant

	7:00 - 8:00	8:00 - 9:00	9:00 - 10:00	10:00 - 11:00	11:00 - 12:00	12:00 - 13:00	13:00 - 14:00	14:00 - 15:00	15:00 - 16:00	16:00 - 17:00	17:00 - 18:00	18:00 - 19:00
Major St.	323%	379%	305%	313%	371%	395%	406%	389%	438%	452%	462%	364%
Minor St.	88%	50%	75%	78%	89%	129%	141%	119%	91%	107%	95%	70%

Condition B - Interruption to Continuous Traffic is met

Average Major Street % of Warrant				Average Minor Street % of Warrant			
2298.1	/ 900	=	255%	141.3	/ 75	=	188%

Hourly percent of warrant

	7:00 - 8:00	8:00 - 9:00	9:00 - 10:00	10:00 - 11:00	11:00 - 12:00	12:00 - 13:00	13:00 - 14:00	14:00 - 15:00	15:00 - 16:00	16:00 - 17:00	17:00 - 18:00	18:00 - 19:00
Major St.	215%	253%	203%	208%	247%	263%	271%	260%	292%	301%	308%	243%
Minor St.	176%	100%	149%	156%	177%	259%	281%	237%	181%	215%	189%	140%

80% Combination of Conditions A & B is met

Warrant No. 2 - Four Hour Vehicular Volume is met

Hourly percent of warrant

	7:00 - 8:00	8:00 - 9:00	9:00 - 10:00	10:00 - 11:00	11:00 - 12:00	12:00 - 13:00	13:00 - 14:00	14:00 - 15:00	15:00 - 16:00	16:00 - 17:00	17:00 - 18:00	18:00 - 19:00
Minor St.	165%	94%	140%	146%	166%	243%	264%	223%	170%	201%	178%	131%

Warrant No. 3 - Peak Hour is met

	Percent of warrant		Percent of warrant
Overall Peak Hour:	16:45 - 17:45	Higher Volume Side Street Peak Hour:	12:45 - 13:45
Minor St.	145%	Minor St.	223%

Warrant No. 4 - Pedestrian Volume. Pedestrian volume shown are minumum volumes assuming heavy major street traffic. If these volumes are met, warrant 4 requires further engineering analysis

Minimum 4 hour ped. volume crossing major street: 107

Minimum peak hour ped. volume crossing major street: 133

Number of pedestrians crossing major street

	7:00 - 8:00	8:00 - 9:00	9:00 - 10:00	10:00 - 11:00	11:00 - 12:00	12:00 - 13:00	13:00 - 14:00	14:00 - 15:00	15:00 - 16:00	16:00 - 17:00	17:00 - 18:00	18:00 - 19:00
Major St.	0	1	0	1	0	1	0	1	0	1	0	1

Warrant No. 7 - Crash Experience (Requires 3 criteria analysis by engineering)

Total Number: 0 From: 1/1/2005 to 1/1/2008

Accident Rate: 0.00 per million entering vehicles

Types of Accidents	No.	/	Avg.		No.	/	Avg.
Right Angle	0	/	0.0	Rear End	0	/	0.0
Lost Control	0	/	0.0	Side Swipe	0	/	0.0
Left Turn	0	/	0.0	Other	0	/	0.0

SOUTH CAROLINA DEPARTMENT OF TRANSPORTATION
DISTRICT 1
TRAFFIC ENGINEERING

County: Richland City: Columbia Date: 12/1/2016

Major Rt: Broad River Rd * Not on State System Minor Rt: Marley Dr-Menlo (Briarsgate) Dr

Day of Week: Thursday Weather: Clear Office: Short Counts JMS

Type of Control: Signal Speed Limit (major st) 40

Direction of Minor Street: E-W Intersection ADT - 34950 (Calc)

Number of Lanes (major st)* 2 Number of Lanes (minor st)* 1

* Each Direction

INTERSECTION VOLUME SUMMARY

	From N Broad River Rd				From S Broad River Rd				From E Marley Dr-Menlo (B				From W Marley Dr-Menlo (B				Total	Total
	LT	STR	RT	TOT	LT	STR	RT	TOT	LT	STR	RT	TOT	LT	STR	RT	TOT	Vol	Peds
7:00 - 7:15	6	344	8	358	5	246	4	255	7	0	8	15	12	0	11	23	651	4
7:15 - 7:30	4	454	10	468	9	299	4	312	10	0	7	17	22	1	0	23	820	0
7:30 - 7:45	11	352	5	368	14	312	4	330	13	0	6	19	14	2	31	47	764	0
7:45 - 8:00	11	328	4	343	21	359	2	382	16	0	10	26	21	0	24	45	796	3
8:00 - 8:15	9	348	12	369	11	254	4	269	13	0	7	20	12	1	19	32	690	4
8:15 - 8:30	8	371	0	379	8	296	9	313	15	0	5	20	13	1	10	24	736	1
8:30 - 8:45	9	359	10	378	9	244	7	260	8	3	4	15	15	4	27	46	699	2
8:45 - 9:00	12	328	12	352	14	263	8	285	10	0	11	21	12	1	21	34	692	3
9:00 - 9:15	11	245	6	262	8	224	5	237	10	0	6	16	14	0	16	30	545	3
9:15 - 9:30	15	234	13	262	6	248	4	258	7	0	6	13	13	1	18	32	565	0
9:30 - 9:45	15	223	13	251	5	218	2	225	8	1	8	17	14	1	10	25	518	6
9:45 - 10:00	18	240	6	264	4	245	3	252	5	0	6	11	15	2	7	24	551	4
10:00 - 10:15	9	230	7	246	0	237	0	237	10	1	10	21	13	0	7	20	524	2
10:15 - 10:30	14	229	14	257	9	244	4	257	8	1	10	19	21	1	15	37	570	3
10:30 - 10:45	10	243	17	270	4	236	6	246	8	0	5	13	17	1	13	31	560	2
10:45 - 11:00	13	245	18	276	8	258	10	276	11	1	10	22	16	3	8	27	601	0
11:00 - 11:15	7	268	10	285	5	243	6	254	13	0	7	20	16	2	6	24	583	3
11:15 - 11:30	7	224	6	237	6	246	2	254	9	2	6	17	27	4	11	42	550	1
11:30 - 11:45	8	291	9	308	13	240	9	262	7	3	11	21	27	1	18	46	637	1
11:45 - 12:00	10	278	7	295	6	273	5	284	10	1	5	16	13	0	13	26	621	2
12:00 - 12:15	7	269	14	290	9	277	12	298	21	2	6	29	20	0	14	34	651	2
12:15 - 12:30	18	308	9	335	13	301	4	318	9	0	8	17	21	0	13	34	704	1
12:30 - 12:45	9	266	19	294	10	282	8	300	17	0	8	25	13	3	15	31	650	3
12:45 - 13:00	8	275	15	298	6	307	9	322	10	1	10	21	19	1	22	42	683	0
13:00 - 13:15	8	258	15	281	8	283	9	300	14	2	10	26	16	4	15	35	642	0
13:15 - 13:30	9	300	13	322	15	338	6	359	12	1	10	23	24	1	21	46	750	3
13:30 - 13:45	15	307	17	339	12	346	5	363	10	1	8	19	21	1	11	33	754	3
13:45 - 14:00	11	304	5	320	8	300	7	315	13	1	11	25	20	0	11	31	691	3
14:00 - 14:15	2	324	20	346	14	314	7	335	8	0	6	14	14	0	11	25	720	7
14:15 - 14:30	14	295	13	322	6	312	13	331	13	0	7	20	20	1	0	21	694	2
14:30 - 14:45	8	322	17	347	14	344	13	371	16	0	14	30	21	0	14	35	783	0
14:45 - 15:00	19	284	20	323	15	361	10	386	19	2	10	31	22	2	18	42	782	6
15:00 - 15:15	8	315	11	334	8	322	8	338	15	0	15	30	16	0	9	25	727	5
15:15 - 15:30	17	0	14	31	10	315	15	340	14	4	18	36	14	1	23	38	445	5
15:30 - 15:45	11	326	12	349	19	341	7	367	40	0	16	56	16	3	16	35	807	1
15:45 - 16:00	11	283	11	305	8	379	12	399	22	2	11	35	11	2	14	27	766	2
16:00 - 16:15	11	334	14	359	12	399	12	423	19	1	13	33	22	0	8	30	845	1
16:15 - 16:30	8	320	9	337	18	436	15	469	19	1	8	28	20	0	13	33	867	1
16:30 - 16:45	8	319	15	342	13	446	12	471	44	1	10	55	17	1	16	34	902	3
16:45 - 17:00	12	301	15	328	11	424	16	451	22	0	9	31	16	0	14	30	840	3
17:00 - 17:15	7	285	5	297	12	492	14	518	26	1	8	35	17	0	13	30	880	6
17:15 - 17:30	12	322	15	349	14	435	16	465	15	0	7	22	22	0	15	37	873	4
17:30 - 17:45	10	276	4	290	12	499	8	519	27	1	14	42	20	1	12	33	884	2
17:45 - 18:00	12	291	12	315	13	461	12	486	12	0	12	24	17	1	9	27	852	1
18:00 - 18:15	10	283	5	298	18	446	12	476	27	0	18	45	20	1	14	35	854	1
18:15 - 18:30	9	0	14	23	14	504	10	528	12	2	7	21	13	0	11	24	596	0
18:30 - 18:45	13	243	10	266	10	385	8	403	28	0	21	49	9	1	11	21	739	7
18:45 - 19:00	9	228	7	244	4	172	4	180	15	0	7	22	11	3	7	21	467	1
TOTAL	503	13472	537	14512	491	15406	382	16279	717	36	450	1203	819	53	655	1527	33521	117
Trucks	5	198	7	210	13	172	3	188	7	3	2	12	12	0	14	26	436	1.3%
School Buses	2	86	4	92	2	68	3	73	1	0	5	6	2	4	3	9	180	0.5%

TOTAL AND PEAK HOUR VOLUME DIAGRAMS

Broad River Rd AT Marley Dr-Menlo (Briarsgate) Dr Date: 12/1/2016

12.0 HOUR TOTAL VOLUME
FROM 7:00 TO 15:00

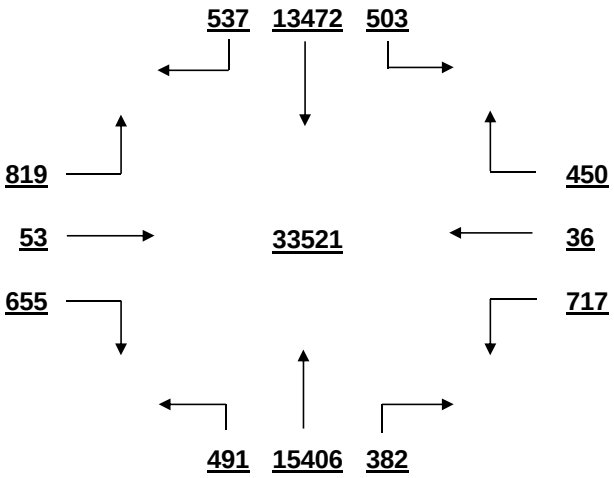

OVERALL PEAK HOUR VOLUME
FROM 16:30 TO 17:30

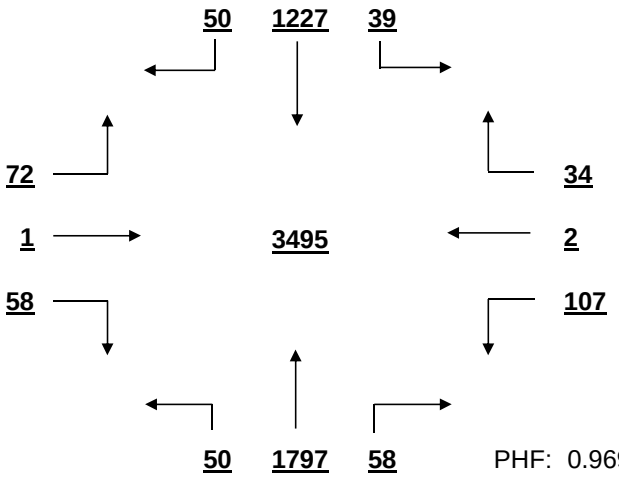

PHF: 0.969

AM PEAK HOUR VOLUME (0:00-10:45)
FROM 7:15 TO 8:15

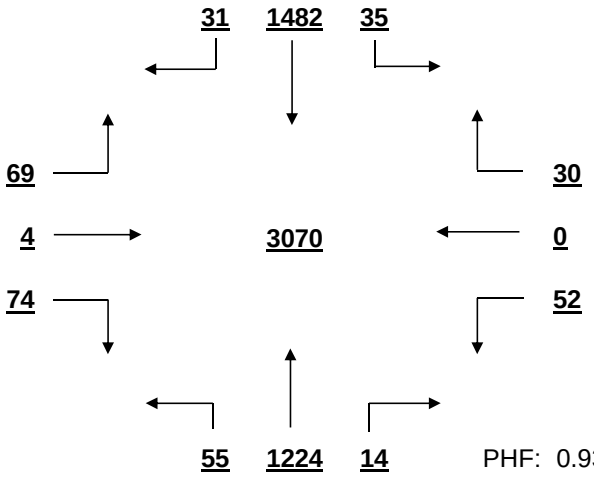

PHF: 0.936

PM PEAK HOUR VOLUME (14:15-23:45)
FROM 16:30 TO 17:30

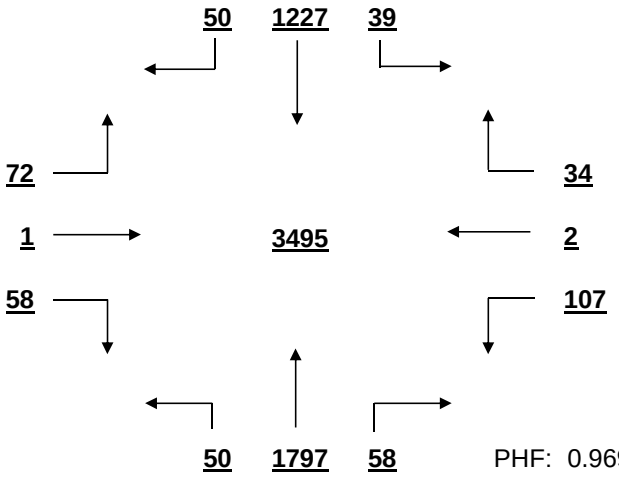

PHF: 0.969

MID-DAY PEAK HOUR VOLUME (11:00-14:00)
FROM 13:00 TO 14:00

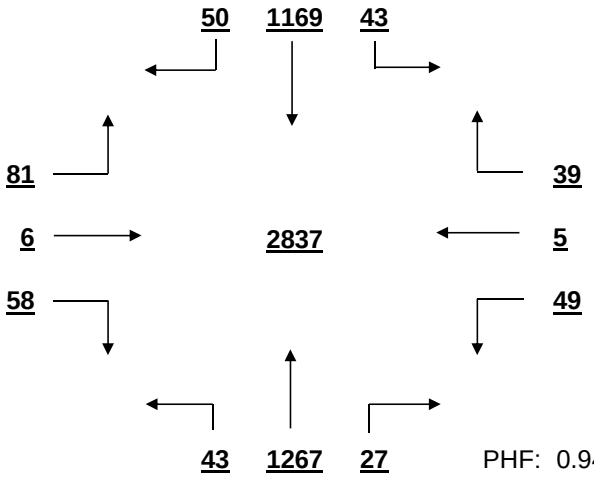

PHF: 0.941

OTHER HOUR VOLUME
FROM 7:00 TO 8:00

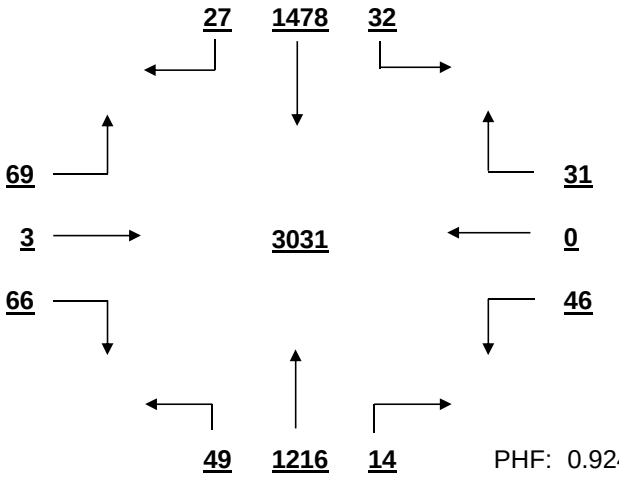

PHF: 0.924

SIGNAL WARRANT ANALYSIS

Broad River Rd AT Marley Dr-Menlo (Briarsgate) Dr Date: 12/1/2016

Minor Street Volume, percent of total = 8.1%
Percent of Left Turns from Minor Street = 56.3%
Percent of Right Turns from Minor Street = 40.5%
Percent of Minor Street Right Turns to Remove from Warrant Analysis = 0%
WARRANT BASIS = **100%**

Warrant No. 1 - Vehicular Volume is met

Condition A - Minimum Vehicular Volume is not met

Average Major Street % of Warrant				Average Minor Street % of Warrant			
2565.9	/	600 =	428%	127.3	/	150 =	85%

Hourly percent of warrant

	7:00 - 8:00	8:00 - 9:00	9:00 - 10:00	10:00 - 11:00	11:00 - 12:00	12:00 - 13:00	13:00 - 14:00	14:00 - 15:00	15:00 - 16:00	16:00 - 17:00	17:00 - 18:00	18:00 - 19:00
Major St.	469%	434%	335%	344%	363%	409%	433%	460%	411%	530%	540%	403%
Minor St.	92%	91%	74%	77%	92%	94%	97%	82%	105%	98%	85%	91%

Condition B - Interruption to Continuous Traffic is met

Average Major Street % of Warrant				Average Minor Street % of Warrant			
2565.9	/	900 =	285%	127.3	/	75 =	170%

Hourly percent of warrant

	7:00 - 8:00	8:00 - 9:00	9:00 - 10:00	10:00 - 11:00	11:00 - 12:00	12:00 - 13:00	13:00 - 14:00	14:00 - 15:00	15:00 - 16:00	16:00 - 17:00	17:00 - 18:00	18:00 - 19:00
Major St.	313%	289%	223%	229%	242%	273%	289%	307%	274%	353%	360%	269%
Minor St.	184%	181%	148%	153%	184%	188%	193%	164%	209%	196%	169%	183%

80% Combination of Conditions A & B is met

Warrant No. 2 - Four Hour Vehicular Volume is met

Hourly percent of warrant

	7:00 - 8:00	8:00 - 9:00	9:00 - 10:00	10:00 - 11:00	11:00 - 12:00	12:00 - 13:00	13:00 - 14:00	14:00 - 15:00	15:00 - 16:00	16:00 - 17:00	17:00 - 18:00	18:00 - 19:00
Minor St.	173%	170%	139%	144%	173%	176%	181%	154%	196%	184%	159%	171%

Warrant No. 3 - Peak Hour is met

	Percent of warrant		Percent of warrant
Overall Peak Hour:	16:30 - 17:30	Higher Volume Side Street Peak Hour:	15:15 - 16:15
Minor St.	143%	Minor St.	160%

Warrant No. 4 - Pedestrian Volume. Pedestrian volume shown are minumum volumes assuming heavy major street traffic. If these volumes are met, warrant 4 requires further engineering analysis

Minimum 4 hour ped. volume crossing major street: 107

Minimum peak hour ped. volume crossing major street: 133

Number of pedestrians crossing major street

	7:00 - 8:00	8:00 - 9:00	9:00 - 10:00	10:00 - 11:00	11:00 - 12:00	12:00 - 13:00	13:00 - 14:00	14:00 - 15:00	15:00 - 16:00	16:00 - 17:00	17:00 - 18:00	18:00 - 19:00
Major St.	1	1	2	1	0	1	3	2	2	0	3	0

Warrant No. 7 - Crash Experience (Requires 3 criteria analysis by engineering)

Total Number: 0 From: 1/1/2005 to 1/1/2008

Accident Rate: 0.00 per million entering vehicles

Types of Accidents	No.	/	Avg.		No.	/	Avg.
Right Angle	0	/	0.0	Rear End	0	/	0.0
Lost Control	0	/	0.0	Side Swipe	0	/	0.0
Left Turn	0	/	0.0	Other	0	/	0.0

SOUTH CAROLINA DEPARTMENT OF TRANSPORTATION
DISTRICT 1
TRAFFIC ENGINEERING

County: Richland City: Columbia Date: 12/2/2016

Major Rt: I-20 EB On-Ramp Minor Rt: Garner Ln

Clear

Day of Week: Friday Weather: Clear Office: Short Counts JMS

Type of Control: Stop Sign Speed Limit (major st) NPSL

Direction of Minor Street: E-W Intersection ADT - 11070 (Calc)

Number of Lanes (major st)* 1 Number of Lanes (minor st)* 1

* Each Direction

INTERSECTION VOLUME SUMMARY

	From N I-20 EB On-Ramp				From S I-20 EB On-Ramp				From E Garner Ln				From W Garner Ln				Total	Total
	LT	STR	RT	TOT	LT	STR	RT	TOT	LT	STR	RT	TOT	LT	STR	RT	TOT	Vol	Peds
7:00 - 7:15	0	0	0	0	0	175	7	182	4	0	1	5	0	0	0	0	187	1
7:15 - 7:30	0	0	0	0	0	237	5	242	7	0	5	12	0	0	0	0	254	1
7:30 - 7:45	0	0	0	0	0	249	22	271	6	0	3	9	0	0	0	0	280	0
7:45 - 8:00	0	0	0	0	0	169	43	212	8	0	11	19	0	0	0	0	231	1
8:00 - 8:15	0	0	0	0	0	163	23	186	4	0	2	6	0	0	0	0	192	0
8:15 - 8:30	0	0	0	0	0	140	18	158	6	0	5	11	0	0	0	0	169	1
8:30 - 8:45	0	0	0	0	0	194	16	210	3	0	5	8	0	0	0	0	218	0
8:45 - 9:00	0	0	0	0	0	149	9	158	4	0	0	4	0	0	0	0	162	0
9:00 - 9:15	0	0	0	0	0	154	16	170	3	0	2	5	0	0	0	0	175	1
9:15 - 9:30	0	0	0	0	0	159	14	173	7	0	7	14	0	0	0	0	187	0
9:30 - 9:45	0	0	0	0	0	138	12	150	10	0	3	13	0	0	0	0	163	1
9:45 - 10:00	0	0	0	0	0	133	13	146	8	0	1	9	0	0	0	0	155	1
10:00 - 10:15	0	0	0	0	0	126	0	126	16	0	2	18	0	0	0	0	144	2
10:15 - 10:30	0	0	0	0	0	127	15	142	13	0	2	15	0	0	0	0	157	0
10:30 - 10:45	0	0	0	0	0	133	20	153	9	0	2	11	0	0	0	0	164	1
10:45 - 11:00	0	0	0	0	0	153	17	170	12	0	4	16	0	0	0	0	186	0
11:00 - 11:15	0	0	0	0	0	151	21	172	9	0	5	14	0	0	0	0	186	0
11:15 - 11:30	0	0	0	0	0	169	16	185	10	0	2	12	0	0	0	0	197	1
11:30 - 11:45	0	0	0	0	0	177	9	186	10	0	4	14	0	0	0	0	200	0
11:45 - 12:00	0	0	0	0	0	165	21	186	15	0	9	24	0	0	0	0	210	0
12:00 - 12:15	0	0	0	0	0	203	7	210	27	0	1	28	0	0	0	0	238	1
12:15 - 12:30	0	0	0	0	0	168	21	189	9	0	3	12	0	0	0	0	201	0
12:30 - 12:45	0	0	0	0	0	170	15	185	12	0	7	19	0	0	0	0	204	0
12:45 - 13:00	0	0	0	0	0	192	14	206	8	0	10	18	0	0	0	0	224	0
13:00 - 13:15	0	0	0	0	0	164	15	179	20	0	7	27	0	0	0	0	206	0
13:15 - 13:30	0	0	0	0	0	166	15	181	12	0	6	18	0	0	0	0	199	0
13:30 - 13:45	0	0	0	0	0	181	17	198	15	0	6	21	0	0	0	0	219	1
13:45 - 14:00	0	0	0	0	0	199	24	223	16	0	2	18	0	0	0	0	241	1
14:00 - 14:15	0	0	0	0	0	200	16	216	12	0	1	13	0	0	0	0	229	2
14:15 - 14:30	0	0	0	0	0	209	15	224	12	0	2	14	0	0	0	0	238	0
14:30 - 14:45	0	0	0	0	0	196	11	207	9	0	7	16	0	0	0	0	223	0
14:45 - 15:00	0	0	0	0	0	200	16	216	9	0	6	15	0	0	0	0	231	0
15:00 - 15:15	0	0	0	0	0	209	10	219	17	0	2	19	0	0	0	0	238	0
15:15 - 15:30	0	0	0	0	0	243	13	256	7	0	5	12	0	0	0	0	268	0
15:30 - 15:45	0	0	0	0	0	213	12	225	11	0	4	15	0	0	0	0	240	5
15:45 - 16:00	0	0	0	0	0	241	9	250	12	0	4	16	0	0	0	0	266	3
16:00 - 16:15	0	0	0	0	0	239	12	251	9	0	5	14	0	0	0	0	265	0
16:15 - 16:30	0	0	0	0	0	238	8	246	4	0	8	12	0	0	0	0	258	1
16:30 - 16:45	0	0	0	0	0	238	10	248	7	0	4	11	0	0	0	0	259	0
16:45 - 17:00	0	0	0	0	0	230	13	243	10	0	5	15	0	0	0	0	258	2
17:00 - 17:15	0	0	0	0	0	267	13	280	31	0	19	50	0	0	0	0	330	0
17:15 - 17:30	0	0	0	0	0	233	12	245	7	0	8	15	0	0	0	0	260	0
17:30 - 17:45	0	0	0	0	0	192	15	207	11	0	12	23	0	0	0	0	230	0
17:45 - 18:00	0	0	0	0	0	216	10	226	12	0	4	16	0	0	0	0	242	0
18:00 - 18:15	0	0	0	0	0	164	12	176	16	0	9	25	0	0	0	0	201	0
18:15 - 18:30	0	0	0	0	0	194	8	202	8	0	5	13	0	0	0	0	215	5
18:30 - 18:45	0	0	0	0	0	216	9	225	15	0	5	20	0	0	0	0	245	2
18:45 - 19:00	0	0	0	0	0	171	9	180	13	0	2	15	0	0	0	0	195	0
TOTAL	0	0	0	0	0	9013	678	9691	515	0	234	749	0	0	0	0	10440	34
Trucks	0	0	0	0	0	103	6	109	5	0	2	7	0	0	0	0	116	1.1%
School Buses	0	0	0	0	0	56	0	56	1	0	0	1	0	0	0	0	57	0.5%

TOTAL AND PEAK HOUR VOLUME DIAGRAMS

I-20 EB On-Ramp AT Garner Ln Date: 12/2/2016

12.0 HOUR TOTAL VOLUME
FROM 7:00 TO 15:00

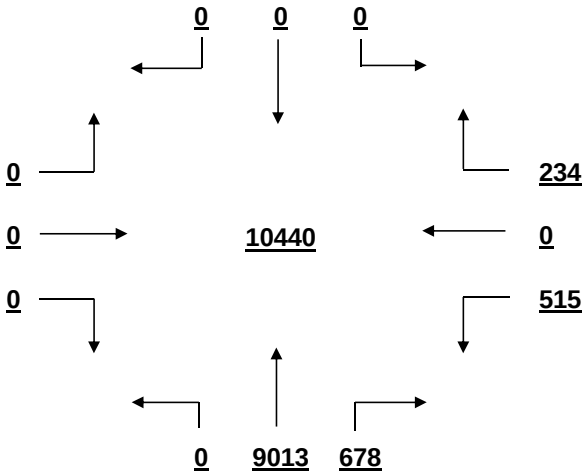

OVERALL PEAK HOUR VOLUME
FROM 16:30 TO 17:30

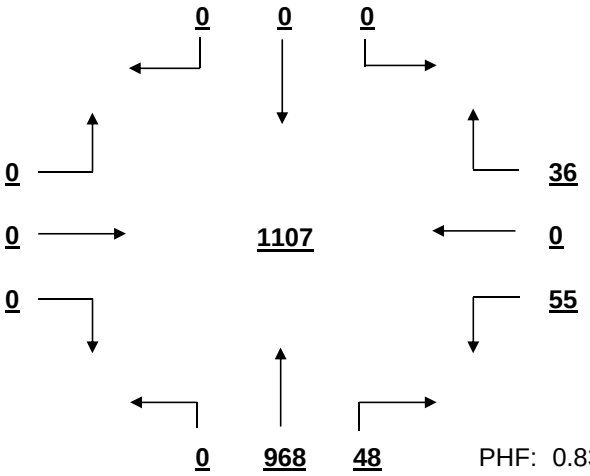

PHF: 0.839

AM PEAK HOUR VOLUME (0:00-10:45)
FROM 7:15 TO 8:15

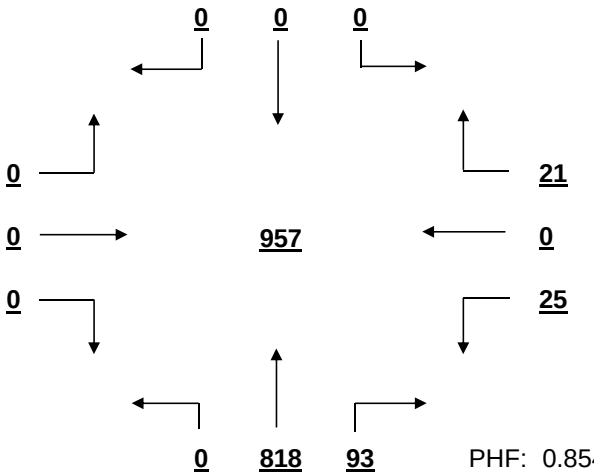

PHF: 0.854

PM PEAK HOUR VOLUME (14:15-23:45)
FROM 16:30 TO 17:30

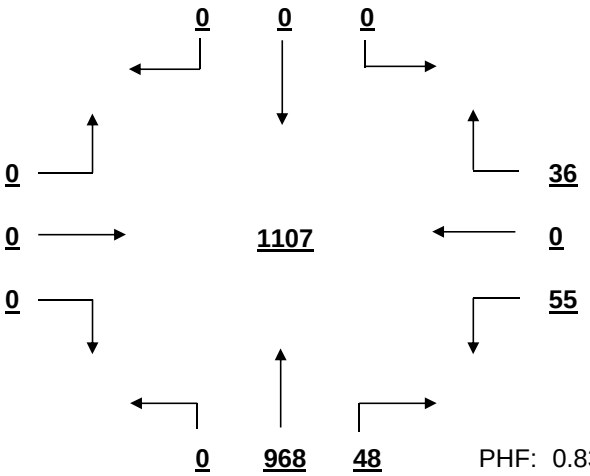

PHF: 0.839

MID-DAY PEAK HOUR VOLUME (11:00-14:00)
FROM 12:00 TO 13:00

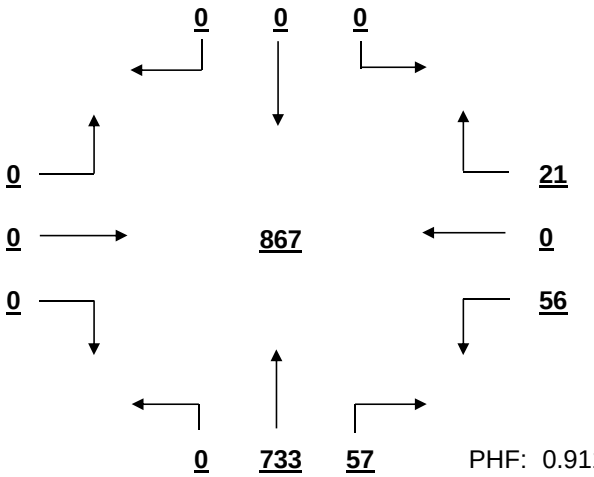

PHF: 0.911

OTHER HOUR VOLUME
FROM 7:00 TO 8:00

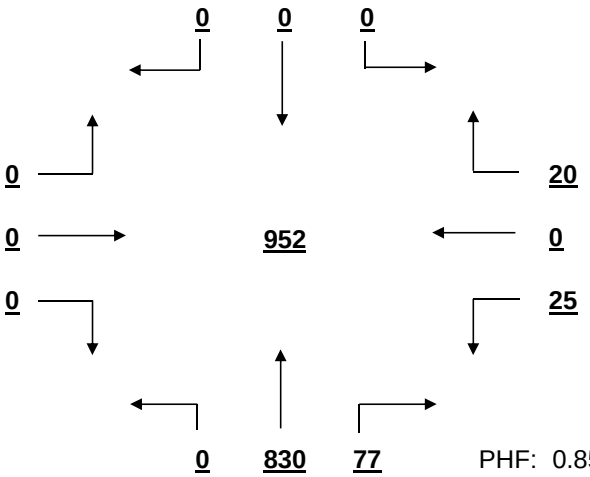

PHF: 0.850

SIGNAL WARRANT ANALYSIS

I-20 EB On-Ramp AT Garner Ln Date: 12/2/2016

Minor Street Volume, percent of total = 7.2%
Percent of Left Turns from Minor Street = 68.8%
Percent of Right Turns from Minor Street = 31.2%
Percent of Minor Street Right Turns to Remove from Warrant Analysis = 0%
WARRANT BASIS = **70%**

Warrant No. 1 - Vehicular Volume is met

Condition A - Minimum Vehicular Volume is not met

Average Major Street % of Warrant				Average Minor Street % of Warrant			
807.6	/ 350	=	231%	62.4	/ 105	=	59%

Hourly percent of warrant

	7:00 - 8:00	8:00 - 9:00	9:00 - 10:00	10:00 - 11:00	11:00 - 12:00	12:00 - 13:00	13:00 - 14:00	14:00 - 15:00	15:00 - 16:00	16:00 - 17:00	17:00 - 18:00	18:00 - 19:00
Major St.	259%	203%	183%	169%	208%	226%	223%	247%	271%	282%	274%	224%
Minor St.	43%	28%	39%	57%	61%	73%	80%	55%	59%	50%	99%	70%

Condition B - Interruption to Continuous Traffic is met

Average Major Street % of Warrant				Average Minor Street % of Warrant			
807.6	/ 525	=	154%	62.4	/ 53	=	119%

Hourly percent of warrant

	7:00 - 8:00	8:00 - 9:00	9:00 - 10:00	10:00 - 11:00	11:00 - 12:00	12:00 - 13:00	13:00 - 14:00	14:00 - 15:00	15:00 - 16:00	16:00 - 17:00	17:00 - 18:00	18:00 - 19:00
Major St.	173%	136%	122%	113%	139%	150%	149%	164%	181%	188%	182%	149%
Minor St.	86%	55%	78%	114%	122%	147%	160%	110%	118%	99%	198%	139%

80% Combination of Conditions A & B is not applicable

Warrant No. 2 - Four Hour Vehicular Volume is met

Hourly percent of warrant

	7:00 - 8:00	8:00 - 9:00	9:00 - 10:00	10:00 - 11:00	11:00 - 12:00	12:00 - 13:00	13:00 - 14:00	14:00 - 15:00	15:00 - 16:00	16:00 - 17:00	17:00 - 18:00	18:00 - 19:00
Minor St.	75%	43%	49%	62%	101%	147%	156%	97%	103%	87%	173%	137%

Warrant No. 3 - Peak Hour is met

Percent of warrant			Percent of warrant		
Overall Peak Hour:	16:30 - 17:30		Higher Volume Side Street Peak Hour:	17:00 - 18:00	
Minor St.	119%		Minor St.	125%	

Warrant No. 4 - Pedestrian Volume. Pedestrian volume shown are minumum volumes assuming heavy major street traffic. If these volumes are met, warrant 4 requires further engineering analysis

Minimum 4 hour ped. volume crossing major street	Minimum peak hour ped. volume crossing major street
75	93

Number of pedestrians crossing major street

	7:00 - 8:00	8:00 - 9:00	9:00 - 10:00	10:00 - 11:00	11:00 - 12:00	12:00 - 13:00	13:00 - 14:00	14:00 - 15:00	15:00 - 16:00	16:00 - 17:00	17:00 - 18:00	18:00 - 19:00
Major St.	3	1	3	3	1	1	2	2	8	3	0	7

Warrant No. 7 - Crash Experience (Requires 3 criteria analysis by engineering)

Total Number: 0 From: 1/1/2005 to 1/1/2008
Accident Rate: 0.00 per million entering vehicles

Types of Accidents	No.	/	Avg.		No.	/	Avg.
Right Angle	0	/	0.0	Rear End	0	/	0.0
Lost Control	0	/	0.0	Side Swipe	0	/	0.0
Left Turn	0	/	0.0	Other	0	/	0.0

SOUTH CAROLINA DEPARTMENT OF TRANSPORTATION
DISTRICT 1
TRAFFIC ENGINEERING

County: Richland City: Columbia Date: 12/1/2016

Major Rt: Broad River Rd * Not on State System Minor Rt: Longcreek Dr Clear

Day of Week: Thursday Weather: Clear Office: Short Counts JMS

Type of Control: Signal Speed Limit (major st) 40

Direction of Minor Street: E-W Intersection ADT - 30830 (Calc)

Number of Lanes (major st)* 2 Number of Lanes (minor st)* 1

* Each Direction

INTERSECTION VOLUME SUMMARY

	From N Broad River Rd				From S Broad River Rd				From E Longcreek Dr				From W Longcreek Dr				Total	Total
	LT	STR	RT	TOT	LT	STR	RT	TOT	LT	STR	RT	TOT	LT	STR	RT	TOT	Vol	Peds
7:00 - 7:15	7	258	1	266	0	153	10	163	32	0	37	69	0	0	0	0	498	1
7:15 - 7:30	22	357	3	382	0	175	26	201	42	0	36	78	0	0	0	0	661	0
7:30 - 7:45	31	331	0	362	0	221	26	247	33	0	56	89	0	0	0	0	698	0
7:45 - 8:00	21	355	0	376	0	215	18	233	34	0	56	90	0	0	0	0	699	0
8:00 - 8:15	18	364	1	383	0	171	14	185	39	0	31	70	0	0	0	0	638	0
8:15 - 8:30	21	354	0	375	1	188	17	206	26	0	27	53	0	0	0	0	634	3
8:30 - 8:45	12	395	2	409	0	192	18	210	27	0	29	56	0	0	0	0	675	3
8:45 - 9:00	23	339	2	364	0	190	21	211	31	0	25	56	0	0	0	0	631	1
9:00 - 9:15	21	260	1	282	1	185	8	194	17	0	32	49	0	0	0	0	525	0
9:15 - 9:30	14	232	1	247	0	182	14	196	29	0	26	55	0	0	0	0	498	3
9:30 - 9:45	15	224	1	240	0	176	14	190	15	0	22	37	0	0	0	0	467	1
9:45 - 10:00	19	244	2	265	0	182	11	193	20	1	33	54	0	0	0	0	512	0
10:00 - 10:15	24	226	1	251	0	207	0	207	25	0	25	50	0	0	0	0	508	1
10:15 - 10:30	27	238	0	265	1	176	14	191	17	0	35	52	0	0	0	0	508	2
10:30 - 10:45	23	223	1	247	0	206	16	222	15	0	16	31	0	0	0	0	500	0
10:45 - 11:00	21	238	6	265	1	212	16	229	21	1	33	55	0	0	0	0	549	3
11:00 - 11:15	23	242	4	269	2	222	21	245	30	0	21	51	0	0	0	0	565	1
11:15 - 11:30	26	211	1	238	2	207	18	227	24	0	32	56	0	0	0	0	521	1
11:30 - 11:45	21	271	1	293	4	228	29	261	24	0	25	49	0	0	0	0	603	0
11:45 - 12:00	22	246	16	284	5	248	26	279	21	0	18	39	0	0	0	0	602	0
12:00 - 12:15	33	280	3	316	8	259	34	301	38	0	33	71	0	0	0	0	688	0
12:15 - 12:30	32	262	11	305	8	286	27	321	32	0	31	63	0	0	0	0	689	2
12:30 - 12:45	31	287	9	327	4	281	26	311	31	0	31	62	0	0	0	0	700	0
12:45 - 13:00	21	246	7	274	2	254	17	273	41	0	26	67	0	0	0	0	614	4
13:00 - 13:15	38	286	8	332	8	276	34	318	35	0	36	71	0	0	0	0	721	2
13:15 - 13:30	32	271	4	307	6	286	39	331	27	0	26	53	0	0	0	0	691	2
13:30 - 13:45	38	273	6	317	4	319	27	350	34	0	30	64	0	0	0	0	731	0
13:45 - 14:00	36	238	5	279	4	295	30	329	30	0	31	61	0	0	0	0	669	2
14:00 - 14:15	33	274	8	315	8	274	32	314	35	0	40	75	0	0	0	0	704	2
14:15 - 14:30	39	255	3	297	2	306	36	344	26	0	47	73	0	0	0	0	714	1
14:30 - 14:45	24	249	4	277	0	271	25	296	20	0	42	62	0	0	0	0	635	0
14:45 - 15:00	44	277	5	326	1	294	32	327	35	0	29	64	0	0	0	0	717	2
15:00 - 15:15	50	266	3	319	0	288	35	323	36	0	30	66	0	0	0	0	708	1
15:15 - 15:30	32	0	3	35	4	293	29	326	31	1	49	81	0	0	0	0	442	3
15:30 - 15:45	43	290	4	337	2	277	43	322	28	0	26	54	0	0	0	0	713	0
15:45 - 16:00	42	259	7	308	2	281	36	319	29	0	45	74	0	0	0	0	701	0
16:00 - 16:15	36	262	4	302	3	328	21	352	22	1	32	55	0	0	0	0	709	2
16:15 - 16:30	56	286	7	349	5	308	37	350	28	0	27	55	0	0	0	0	754	0
16:30 - 16:45	37	256	0	293	1	371	36	408	31	0	46	77	0	0	0	0	778	1
16:45 - 17:00	47	233	2	282	1	388	22	411	22	0	26	48	0	0	0	0	741	2
17:00 - 17:15	41	219	1	261	1	398	33	432	37	0	36	73	0	0	0	0	766	0
17:15 - 17:30	37	259	0	296	1	394	36	431	43	0	28	71	0	0	0	0	798	1
17:30 - 17:45	52	235	5	292	2	349	39	390	37	0	38	75	0	0	0	0	757	2
17:45 - 18:00	60	205	2	267	2	291	54	347	48	0	54	102	0	0	0	0	716	3
18:00 - 18:15	40	247	3	290	2	320	32	354	27	0	29	56	0	0	0	0	700	1
18:15 - 18:30	59	0	7	66	1	303	35	339	39	0	41	80	0	0	0	0	485	3
18:30 - 18:45	53	225	6	284	1	284	36	321	39	0	31	70	0	0	0	0	675	0
18:45 - 19:00	51	175	5	231	1	236	46	283	20	0	37	57	0	0	0	0	571	0
TOTAL	1548	12223	176	13947	101	12446	1266	13813	1423	4	1592	3019	0	0	0	0	30779	56
Trucks	22	137	2	161	0	118	11	129	10	0	16	26	0	0	0	0	316	1.0%
School Buses	6	75	0	81	0	72	9	81	4	0	9	13	0	0	0	0	175	0.6%

TOTAL AND PEAK HOUR VOLUME DIAGRAMS

Broad River Rd AT Longcreek Dr Date: 12/1/2016

12.0 HOUR TOTAL VOLUME
FROM 7:00 TO 15:00

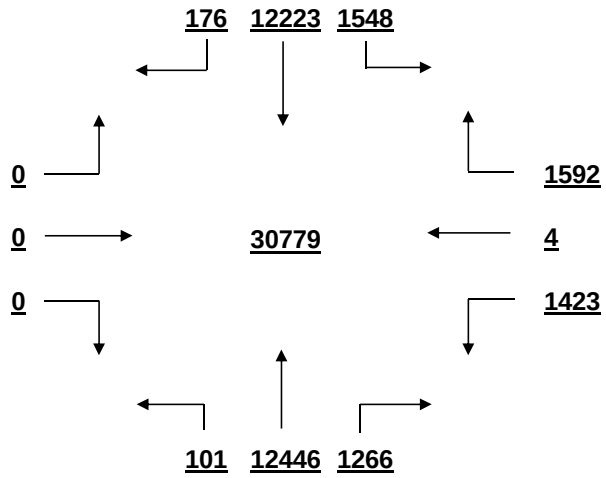

OVERALL PEAK HOUR VOLUME
FROM 16:30 TO 17:30

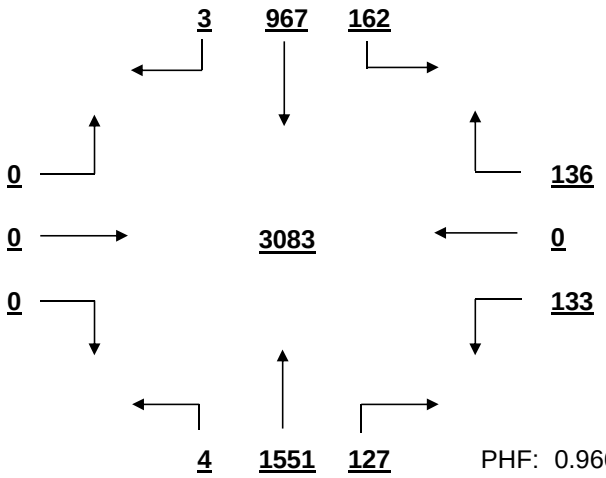

PHF: 0.966

AM PEAK HOUR VOLUME (0:00-10:45)
FROM 7:15 TO 8:15

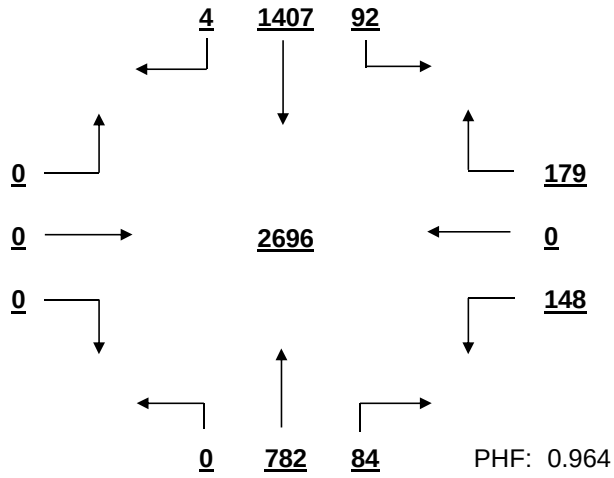

PHF: 0.964

PM PEAK HOUR VOLUME (14:15-23:45)
FROM 16:30 TO 17:30

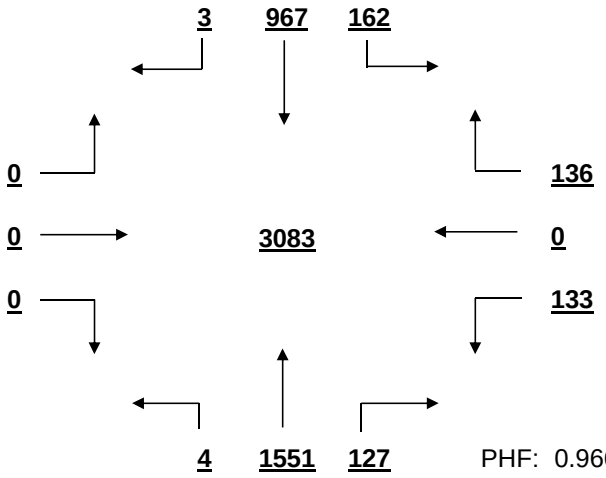

PHF: 0.966

MID-DAY PEAK HOUR VOLUME (11:00-14:00)
FROM 13:00 TO 14:00

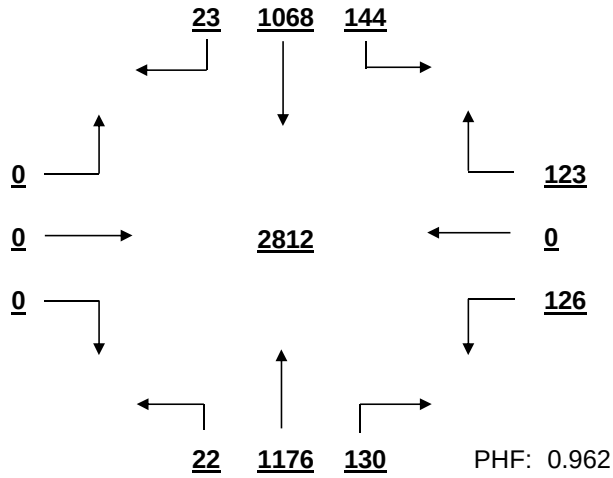

PHF: 0.962

OTHER HOUR VOLUME
FROM 7:00 TO 8:00

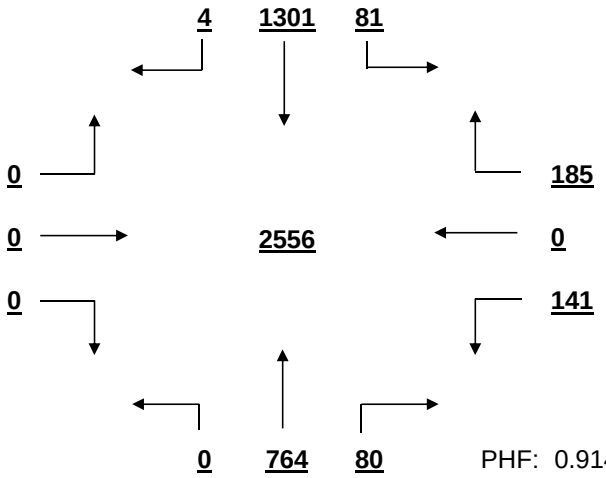

PHF: 0.914

SIGNAL WARRANT ANALYSIS

Broad River Rd AT Longcreek Dr Date: 12/1/2016

Minor Street Volume, percent of total = 9.8%
Percent of Left Turns from Minor Street = 47.1%
Percent of Right Turns from Minor Street = 52.7%
Percent of Minor Street Right Turns to Remove from Warrant Analysis = 0%
WARRANT BASIS = **100%**

Warrant No. 1 - Vehicular Volume is met

Condition A - Minimum Vehicular Volume is met

Average Major Street % of Warrant				Average Minor Street % of Warrant			
2313.3	/ 600	=	386%	251.6	/ 150	=	168%

Hourly percent of warrant

	7:00 - 8:00	8:00 - 9:00	9:00 - 10:00	10:00 - 11:00	11:00 - 12:00	12:00 - 13:00	13:00 - 14:00	14:00 - 15:00	15:00 - 16:00	16:00 - 17:00	17:00 - 18:00	18:00 - 19:00
Major St.	372%	391%	301%	313%	349%	405%	427%	416%	382%	458%	453%	361%
Minor St.	217%	157%	130%	125%	130%	175%	166%	183%	183%	157%	214%	175%

Condition B - Interruption to Continuous Traffic is met

Average Major Street % of Warrant				Average Minor Street % of Warrant			
2313.3	/ 900	=	257%	251.6	/ 75	=	335%

Hourly percent of warrant

	7:00 - 8:00	8:00 - 9:00	9:00 - 10:00	10:00 - 11:00	11:00 - 12:00	12:00 - 13:00	13:00 - 14:00	14:00 - 15:00	15:00 - 16:00	16:00 - 17:00	17:00 - 18:00	18:00 - 19:00
Major St.	248%	260%	201%	209%	233%	270%	285%	277%	254%	305%	302%	241%
Minor St.	435%	313%	260%	251%	260%	351%	332%	365%	367%	313%	428%	351%

80% Combination of Conditions A & B is met

Warrant No. 2 - Four Hour Vehicular Volume is met

Hourly percent of warrant

	7:00 - 8:00	8:00 - 9:00	9:00 - 10:00	10:00 - 11:00	11:00 - 12:00	12:00 - 13:00	13:00 - 14:00	14:00 - 15:00	15:00 - 16:00	16:00 - 17:00	17:00 - 18:00	18:00 - 19:00
Minor St.	408%	294%	244%	235%	244%	329%	311%	343%	344%	294%	401%	329%

Warrant No. 3 - Peak Hour is met

Percent of warrant			Percent of warrant	
Overall Peak Hour:	16:30 - 17:30	Higher Volume Side Street Peak Hour:	7:15 - 8:15	
Minor St.	269%	Minor St.	327%	

Warrant No. 4 - Pedestrian Volume. Pedestrian volume shown are minumum volumes assuming heavy major street traffic. If these volumes are met, warrant 4 requires further engineering analysis

Minimum 4 hour ped. volume crossing major street: 107

Minimum peak hour ped. volume crossing major street: 133

Number of pedestrians crossing major street

	7:00 - 8:00	8:00 - 9:00	9:00 - 10:00	10:00 - 11:00	11:00 - 12:00	12:00 - 13:00	13:00 - 14:00	14:00 - 15:00	15:00 - 16:00	16:00 - 17:00	17:00 - 18:00	18:00 - 19:00
Major St.	1	4	1	2	0	4	4	3	2	1	3	3

Warrant No. 7 - Crash Experience (Requires 3 criteria analysis by engineering)

Total Number: 0 From: 1/1/2005 to 1/1/2008

Accident Rate: 0.00 per million entering vehicles

Types of Accidents	No.	/	Avg.		No.	/	Avg.
Right Angle	0	/	0.0	Rear End	0	/	0.0
Lost Control	0	/	0.0	Side Swipe	0	/	0.0
Left Turn	0	/	0.0	Other	0	/	0.0

SOUTH CAROLINA DEPARTMENT OF TRANSPORTATION
DISTRICT 1
TRAFFIC ENGINEERING

County: Richland City: Columbia Date: 11/28/2016

Major Rt: Broad River Rd * Not on State System Minor Rt: Dutch Square Blvd * Not on State System

Day of Week: Monday Weather: Clear Office: Short Counts JMS

Type of Control: Signal Speed Limit (major st) 40

Direction of Minor Street: E-W Intersection ADT - 25260 (Calc)

Number of Lanes (major st)* 2 Number of Lanes (minor st)* 1

* Each Direction

INTERSECTION VOLUME SUMMARY

	From N Broad River Rd				From S Broad River Rd				From E Dutch Square Blvd				From W Dutch Square Blvd				Total	Total
	LT	STR	RT	TOT	LT	STR	RT	TOT	LT	STR	RT	TOT	LT	STR	RT	TOT	Vol	Peds
7:00 - 7:15	0	178	28	206	1	99	0	100	0	0	0	0	33	0	2	35	341	1
7:15 - 7:30	0	311	38	349	3	139	0	142	0	0	0	0	40	0	3	43	534	0
7:30 - 7:45	0	168	23	191	5	105	0	110	0	0	0	0	42	0	7	49	350	0
7:45 - 8:00	0	256	39	295	4	146	0	150	0	0	0	0	44	0	16	60	505	0
8:00 - 8:15	0	246	31	277	4	134	0	138	0	0	0	0	38	0	5	43	458	0
8:15 - 8:30	0	267	35	302	0	102	0	102	0	0	0	0	32	0	7	39	443	0
8:30 - 8:45	0	322	41	363	11	148	0	159	0	0	0	0	40	0	13	53	575	0
8:45 - 9:00	0	309	50	359	15	158	0	173	0	0	0	0	42	0	8	50	582	0
9:00 - 9:15	0	218	54	272	7	157	0	164	0	0	0	0	20	0	11	31	467	0
9:15 - 9:30	0	197	57	254	8	121	0	129	0	0	0	0	48	0	19	67	450	0
9:30 - 9:45	0	188	53	241	11	117	0	128	0	0	0	0	60	0	22	82	451	0
9:45 - 10:00	0	195	57	252	18	143	0	161	0	0	0	0	36	0	14	50	463	0
10:00 - 10:15	0	189	41	230	15	157	0	172	0	0	0	0	50	0	14	64	466	0
10:15 - 10:30	0	163	48	211	13	123	0	136	0	0	0	0	35	0	12	47	394	0
10:30 - 10:45	0	171	51	222	17	136	0	153	0	0	0	0	52	0	25	77	452	0
10:45 - 11:00	0	191	59	250	10	138	0	148	0	0	0	0	42	0	18	60	458	0
11:00 - 11:15	0	162	54	216	7	127	0	134	0	0	0	0	54	0	17	71	421	0
11:15 - 11:30	0	161	62	223	13	164	0	177	0	0	0	0	61	0	26	87	487	0
11:30 - 11:45	0	200	67	267	12	187	0	199	0	0	0	0	49	0	17	66	532	0
11:45 - 12:00	0	201	47	248	6	182	0	188	0	0	0	0	80	0	15	95	531	0
12:00 - 12:15	0	194	64	258	16	209	0	225	0	0	0	0	64	0	24	88	571	0
12:15 - 12:30	0	181	60	241	14	157	0	171	0	0	0	0	102	0	22	124	536	1
12:30 - 12:45	0	238	72	310	13	195	0	208	0	0	0	0	74	0	40	114	632	0
12:45 - 13:00	0	202	66	268	12	156	0	168	0	0	0	0	77	0	16	93	529	0
13:00 - 13:15	0	211	71	282	9	147	0	156	0	0	0	0	81	0	11	92	530	0
13:15 - 13:30	0	202	66	268	9	183	0	192	0	0	0	0	79	0	8	87	547	0
13:30 - 13:45	0	145	35	180	5	109	0	114	0	0	0	0	59	0	4	63	357	2
13:45 - 14:00	0	181	53	234	12	181	0	193	0	0	0	0	84	0	13	97	524	2
14:00 - 14:15	0	206	56	262	18	170	0	188	0	0	0	0	82	0	11	93	543	0
14:15 - 14:30	0	185	71	256	6	199	0	205	0	0	0	0	73	0	17	90	551	2
14:30 - 14:45	0	200	55	255	9	208	0	217	0	0	0	0	43	0	17	60	532	0
14:45 - 15:00	0	132	37	169	5	88	0	93	0	0	0	0	54	0	7	61	323	0
15:00 - 15:15	0	208	64	272	10	186	0	196	0	0	0	0	65	0	12	77	545	0
15:15 - 15:30	0	252	76	328	17	235	0	252	0	0	0	0	68	0	15	83	663	1
15:30 - 15:45	0	242	55	297	7	197	0	204	0	0	0	0	61	0	13	74	575	0
15:45 - 16:00	0	163	50	213	12	175	0	187	0	0	0	0	58	0	11	69	469	0
16:00 - 16:15	0	175	45	220	14	182	0	196	0	0	0	0	79	0	8	87	503	0
16:15 - 16:30	0	228	57	285	16	223	0	239	0	0	0	0	63	0	14	77	601	0
16:30 - 16:45	0	204	55	259	12	251	0	263	0	0	0	0	94	0	15	109	631	0
16:45 - 17:00	0	165	47	212	15	263	0	278	0	0	0	0	87	0	11	98	588	0
17:00 - 17:15	0	178	50	228	8	285	0	293	0	0	0	0	120	0	21	141	662	1
17:15 - 17:30	0	200	51	251	17	254	0	271	0	0	0	0	105	0	18	123	645	0
17:30 - 17:45	0	200	51	251	20	255	0	275	0	0	0	0	75	0	15	90	616	0
17:45 - 18:00	0	153	43	196	14	213	0	227	0	0	0	0	84	0	8	92	515	0
18:00 - 18:15	0	155	38	193	12	245	0	257	0	0	0	0	54	0	9	63	513	0
18:15 - 18:30	0	147	30	177	10	159	0	169	0	0	0	0	47	0	6	53	399	0
18:30 - 18:45	0	147	42	189	8	155	0	163	0	0	0	0	66	0	11	77	429	1
18:45 - 19:00	0	128	37	165	9	144	0	153	0	0	0	0	58	0	12	70	388	0
TOTAL	0	9515	2432	11947	509	8207	0	8716	0	0	0	0	2954	0	660	3614	24277	11
Trucks	0	34	9	43	2	31	0	33	0	0	0	0	7	0	3	10	86	0.4%
School Buses	0	38	25	63	0	43	0	43	0	0	0	0	19	0	6	25	131	0.5%

TOTAL AND PEAK HOUR VOLUME DIAGRAMS

Broad River Rd AT Dutch Square Blvd Date: 11/28/2016

12.0 HOUR TOTAL VOLUME
FROM 7:00 TO 15:00

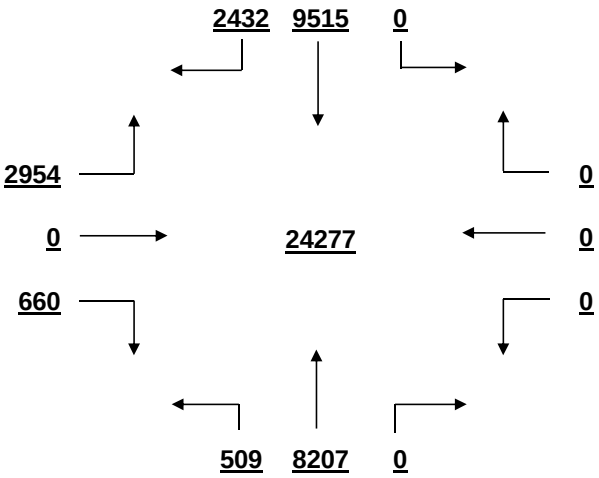

OVERALL PEAK HOUR VOLUME
FROM 16:30 TO 17:30

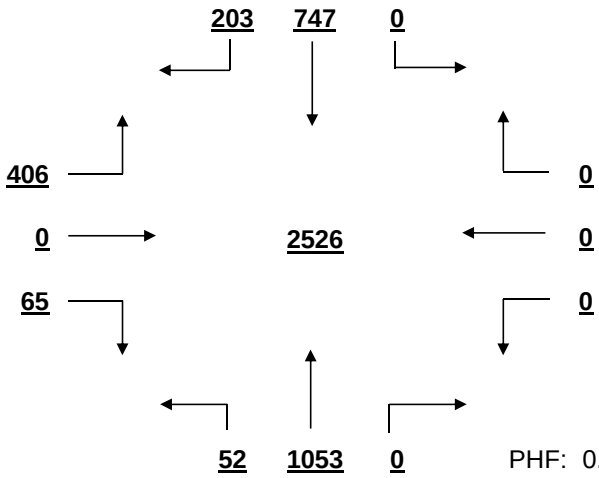

PHF: 0.954

AM PEAK HOUR VOLUME (0:00-10:45)
FROM 8:30 TO 9:30

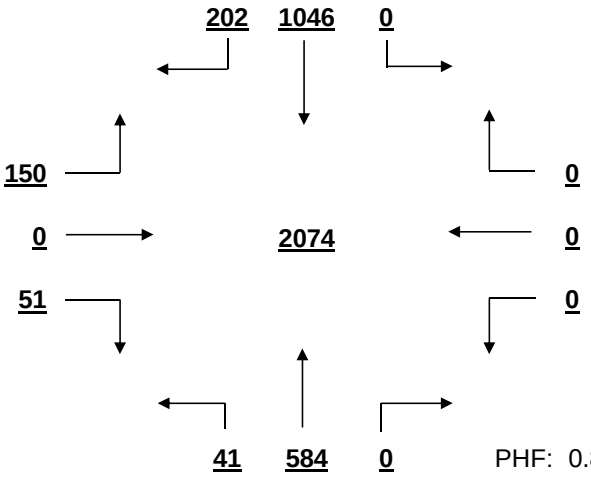

PHF: 0.891

PM PEAK HOUR VOLUME (14:15-23:45)
FROM 16:30 TO 17:30

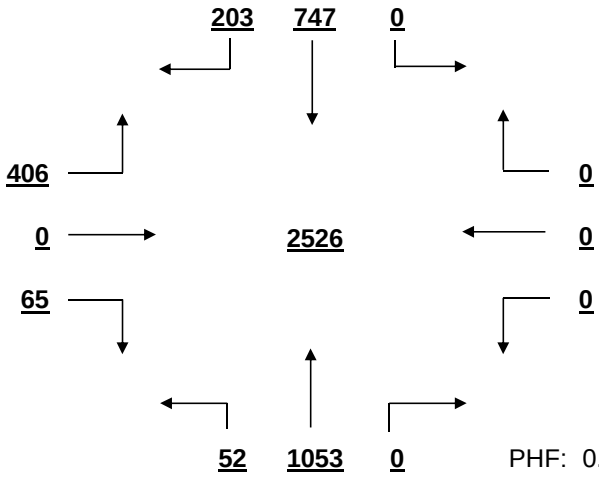

PHF: 0.954

MID-DAY PEAK HOUR VOLUME (11:00-14:00)
FROM 11:45 TO 12:45

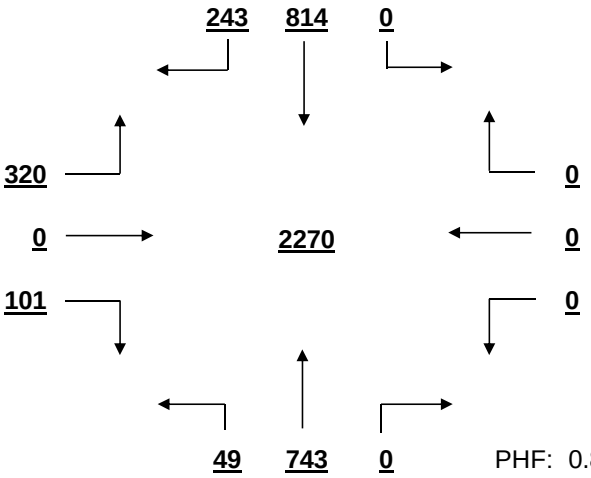

PHF: 0.898

OTHER HOUR VOLUME
FROM 7:00 TO 8:00

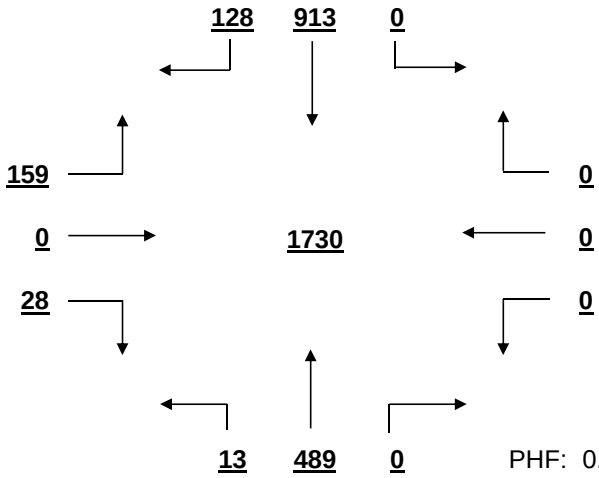

PHF: 0.810

SIGNAL WARRANT ANALYSIS

Broad River Rd AT Dutch Square Blvd Date: 11/28/2016

Minor Street Volume, percent of total = 14.9%
Percent of Left Turns from Minor Street = 81.7%
Percent of Right Turns from Minor Street = 18.3%
Percent of Minor Street Right Turns to Remove from Warrant Analysis = 0%
WARRANT BASIS = **100%**

Warrant No. 1 - Vehicular Volume is met

Condition A - Minimum Vehicular Volume is met

Average Major Street % of Warrant				Average Minor Street % of Warrant			
1721.9	/ 600	=	287%	301.2	/ 150	=	201%

Hourly percent of warrant

	7:00 - 8:00	8:00 - 9:00	9:00 - 10:00	10:00 - 11:00	11:00 - 12:00	12:00 - 13:00	13:00 - 14:00	14:00 - 15:00	15:00 - 16:00	16:00 - 17:00	17:00 - 18:00	18:00 - 19:00
Major St.	257%	312%	267%	254%	275%	308%	270%	274%	325%	325%	332%	244%
Minor St.	125%	123%	153%	165%	213%	279%	226%	203%	202%	247%	297%	175%

Condition B - Interruption to Continuous Traffic is met

Average Major Street % of Warrant				Average Minor Street % of Warrant			
1721.9	/ 900	=	191%	301.2	/ 75	=	402%

Hourly percent of warrant

	7:00 - 8:00	8:00 - 9:00	9:00 - 10:00	10:00 - 11:00	11:00 - 12:00	12:00 - 13:00	13:00 - 14:00	14:00 - 15:00	15:00 - 16:00	16:00 - 17:00	17:00 - 18:00	18:00 - 19:00
Major St.	171%	208%	178%	169%	184%	205%	180%	183%	217%	217%	221%	163%
Minor St.	249%	247%	307%	331%	425%	559%	452%	405%	404%	495%	595%	351%

80% Combination of Conditions A & B is met

Warrant No. 2 - Four Hour Vehicular Volume is met

Hourly percent of warrant

	7:00 - 8:00	8:00 - 9:00	9:00 - 10:00	10:00 - 11:00	11:00 - 12:00	12:00 - 13:00	13:00 - 14:00	14:00 - 15:00	15:00 - 16:00	16:00 - 17:00	17:00 - 18:00	18:00 - 19:00
Minor St.	234%	231%	288%	310%	399%	524%	424%	380%	379%	464%	558%	329%

Warrant No. 3 - Peak Hour is met

	Percent of warrant		Percent of warrant
Overall Peak Hour:	16:30 - 17:30	Higher Volume Side Street Peak Hour:	16:30 - 17:30
Minor St.	471%	Minor St.	471%

Warrant No. 4 - Pedestrian Volume. Pedestrian volume shown are minumum volumes assuming heavy major street traffic. If these volumes are met, warrant 4 requires further engineering analysis

Minimum 4 hour ped. volume crossing major street: 107

Minimum peak hour ped. volume crossing major street: 133

Number of pedestrians crossing major street

	7:00 - 8:00	8:00 - 9:00	9:00 - 10:00	10:00 - 11:00	11:00 - 12:00	12:00 - 13:00	13:00 - 14:00	14:00 - 15:00	15:00 - 16:00	16:00 - 17:00	17:00 - 18:00	18:00 - 19:00
Major St.	0	0	0	0	0	0	0	0	0	0	0	0

Warrant No. 7 - Crash Experience (Requires 3 criteria analysis by engineering)

Total Number: 0 From: 1/1/2005 to 1/1/2008

Accident Rate: 0.00 per million entering vehicles

Types of Accidents	No.	/	Avg.		No.	/	Avg.
Right Angle	0	/	0.0	Rear End	0	/	0.0
Lost Control	0	/	0.0	Side Swipe	0	/	0.0
Left Turn	0	/	0.0	Other	0	/	0.0

SOUTH CAROLINA DEPARTMENT OF TRANSPORTATION
DISTRICT 1
TRAFFIC ENGINEERING

County: Richland City: Columbia Date: 12/2/2016

Major Rt: Broad River Rd * Not on State System Minor Rt: Omarest Dr-Private Dr Clear

Day of Week: Friday Weather: Clear Office: Short Counts JMS

Type of Control: Signal Speed Limit (major st) 40

Direction of Minor Street: E-W Intersection ADT - 24170 (Calc)

Number of Lanes (major st)* 2 Number of Lanes (minor st)* 1 * Each Direction

INTERSECTION VOLUME SUMMARY

	From N Broad River Rd				From S Broad River Rd				From E Omarest Dr-Private				From W Omarest Dr-Private				Total	Total
	LT	STR	RT	TOT	LT	STR	RT	TOT	LT	STR	RT	TOT	LT	STR	RT	TOT	Vol	Peds
7:00 - 7:15	5	262	0	267	0	140	5	145	23	0	8	31	0	0	0	0	443	1
7:15 - 7:30	5	321	0	326	1	156	10	167	24	0	8	32	0	0	0	0	525	0
7:30 - 7:45	5	309	3	317	0	198	14	212	17	0	5	22	0	0	2	2	553	1
7:45 - 8:00	9	259	2	270	2	183	8	193	26	0	10	36	0	0	3	3	502	2
8:00 - 8:15	8	246	0	254	1	149	9	159	14	0	10	24	0	0	1	1	438	3
8:15 - 8:30	4	261	0	265	2	154	8	164	16	0	5	21	0	0	1	1	451	0
8:30 - 8:45	7	245	0	252	3	170	7	180	7	0	7	14	1	0	1	2	448	4
8:45 - 9:00	6	204	0	210	5	170	7	182	23	0	8	31	1	0	2	3	426	3
9:00 - 9:15	9	222	1	232	2	162	8	172	10	0	8	18	0	1	3	4	426	2
9:15 - 9:30	5	194	1	200	4	165	7	176	19	0	10	29	0	0	5	5	410	4
9:30 - 9:45	4	224	1	229	3	192	8	203	10	0	5	15	1	0	7	8	455	3
9:45 - 10:00	4	197	2	203	7	187	13	207	8	0	8	16	1	0	5	6	432	4
10:00 - 10:15	4	208	2	214	0	183	0	183	10	0	6	16	0	0	6	6	419	6
10:15 - 10:30	8	197	1	206	7	173	10	190	9	0	7	16	0	0	7	7	419	7
10:30 - 10:45	12	215	1	228	3	187	8	198	11	0	5	16	0	0	1	1	443	5
10:45 - 11:00	7	188	3	198	3	203	10	216	12	1	6	19	1	0	0	1	434	2
11:00 - 11:15	7	212	0	219	0	204	9	213	8	0	10	18	0	0	2	2	452	0
11:15 - 11:30	4	196	2	202	8	216	12	236	13	0	7	20	1	0	3	4	462	3
11:30 - 11:45	6	207	0	213	2	257	14	273	15	0	7	22	0	0	4	4	512	2
11:45 - 12:00	3	231	2	236	7	221	14	242	15	1	4	20	0	0	3	3	501	0
12:00 - 12:15	6	213	2	221	3	270	14	287	12	1	5	18	0	0	3	3	529	5
12:15 - 12:30	5	257	2	264	5	269	11	285	17	2	5	24	0	0	6	6	579	8
12:30 - 12:45	7	254	2	263	7	247	8	262	14	0	7	21	0	0	5	5	551	0
12:45 - 13:00	4	222	3	229	6	273	13	292	4	1	3	8	0	1	3	4	533	2
13:00 - 13:15	8	271	0	279	4	267	10	281	11	1	12	24	0	1	10	11	595	2
13:15 - 13:30	8	265	2	275	6	221	17	244	10	0	9	19	0	1	5	6	544	3
13:30 - 13:45	12	259	0	271	2	286	10	298	14	0	12	26	1	0	11	12	607	2
13:45 - 14:00	9	239	1	249	3	276	17	296	17	0	12	29	0	0	6	6	580	4
14:00 - 14:15	7	244	0	251	4	278	18	300	11	1	8	20	0	0	7	7	578	2
14:15 - 14:30	10	265	1	276	3	232	8	243	14	0	8	22	0	0	0	0	541	4
14:30 - 14:45	10	230	3	243	2	262	15	279	12	1	7	20	0	0	4	4	546	2
14:45 - 15:00	11	249	2	262	6	275	17	298	8	0	10	18	0	0	6	6	584	2
15:00 - 15:15	11	220	0	231	4	259	18	281	21	4	10	35	1	1	3	5	552	5
15:15 - 15:30	9	0	0	9	4	280	25	309	16	0	7	23	0	0	4	4	345	1
15:30 - 15:45	16	210	3	229	3	281	19	303	7	1	6	14	0	0	9	9	555	6
15:45 - 16:00	10	206	0	216	6	289	24	319	18	2	7	27	1	0	5	6	568	5
16:00 - 16:15	10	219	0	229	1	299	23	323	12	0	4	16	2	1	9	12	580	12
16:15 - 16:30	7	223	1	231	2	321	24	347	13	0	7	20	0	0	5	5	603	13
16:30 - 16:45	8	187	1	196	8	315	20	343	16	3	2	21	0	0	6	6	566	11
16:45 - 17:00	14	213	1	228	5	334	36	375	11	2	8	21	0	1	9	10	634	6
17:00 - 17:15	14	210	4	228	9	316	27	352	17	1	9	27	0	2	5	7	614	10
17:15 - 17:30	10	194	2	206	13	295	23	331	16	2	5	23	1	0	5	6	566	0
17:30 - 17:45	13	184	0	197	5	275	21	301	12	0	13	25	0	0	5	5	528	4
17:45 - 18:00	11	186	3	200	9	300	38	347	16	0	9	25	0	1	6	7	579	0
18:00 - 18:15	8	183	0	191	7	290	39	336	19	1	13	33	0	1	4	5	565	2
18:15 - 18:30	5	0	1	6	4	252	17	273	15	0	8	23	0	0	3	3	305	0
18:30 - 18:45	13	173	1	187	6	229	14	249	18	2	9	29	0	1	6	7	472	0
18:45 - 19:00	11	203	1	215	0	187	12	199	13	0	4	17	0	0	3	3	434	1
TOTAL	389	10377	57	10823	197	11348	719	12264	674	27	363	1064	12	12	209	233	24384	164
Trucks	3	103	1	107	3	122	1	126	5	1	8	14	0	1	3	4	251	1.0%
School Buses	2	53	1	56	2	61	4	67	3	0	0	3	0	1	0	1	127	0.5%

TOTAL AND PEAK HOUR VOLUME DIAGRAMS

Broad River Rd AT Omarest Dr-Private Dr Date: 12/2/2016

12.0 HOUR TOTAL VOLUME
FROM 7:00 TO 15:00

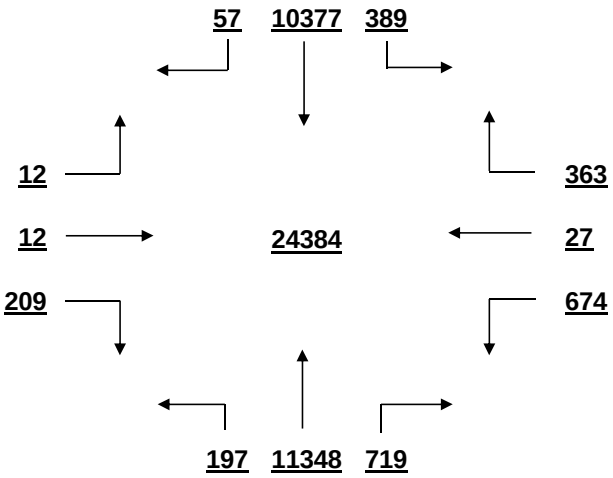

OVERALL PEAK HOUR VOLUME
FROM 16:15 TO 17:15

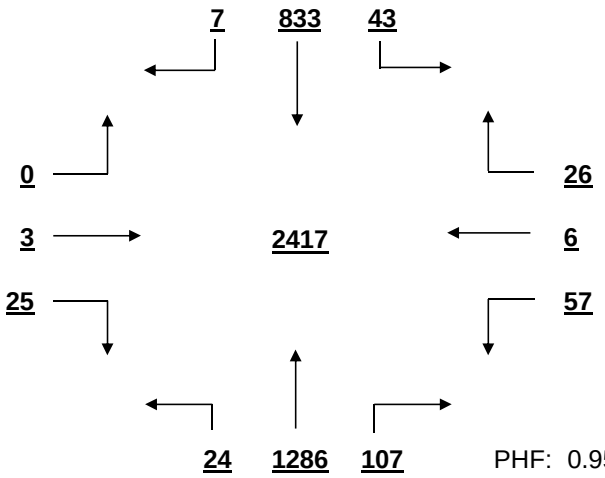

PHF: 0.953

AM PEAK HOUR VOLUME (0:00-10:45)
FROM 7:00 TO 8:00

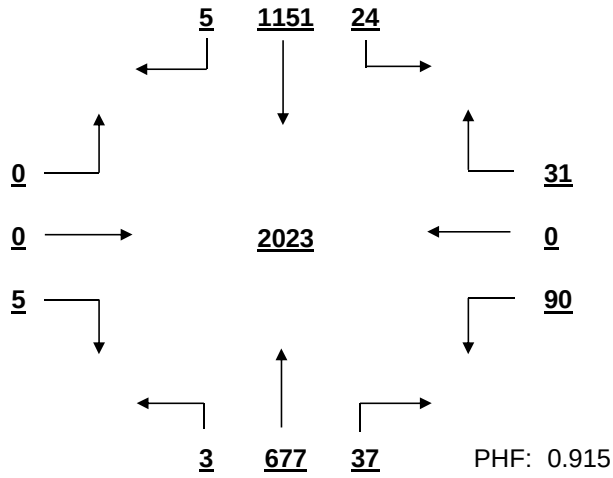

PHF: 0.915

PM PEAK HOUR VOLUME (14:15-23:45)
FROM 16:15 TO 17:15

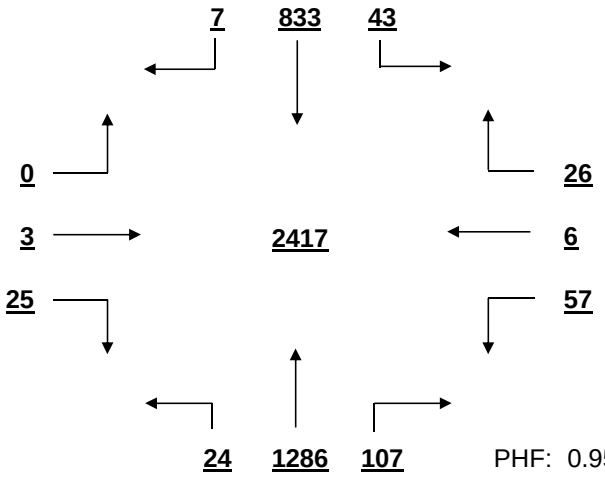

PHF: 0.953

MID-DAY PEAK HOUR VOLUME (11:00-14:00)
FROM 13:00 TO 14:00

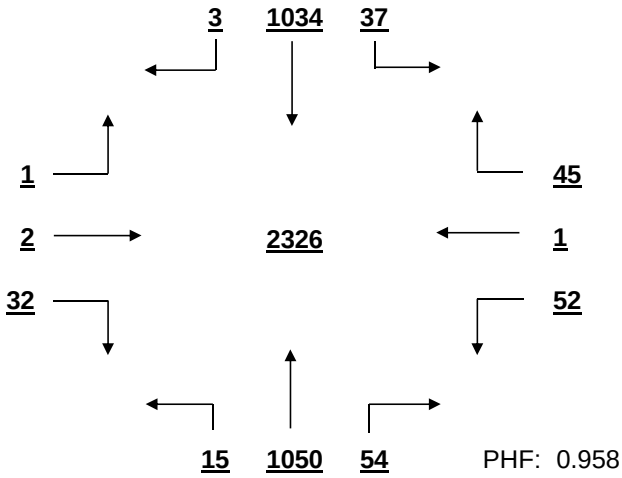

PHF: 0.958

OTHER HOUR VOLUME
FROM 7:00 TO 8:00

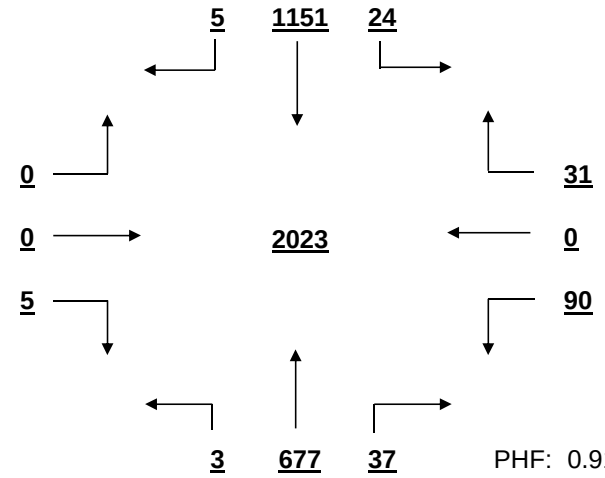

PHF: 0.915

SIGNAL WARRANT ANALYSIS

Broad River Rd AT Omarest Dr-Private Dr Date: 12/2/2016

Minor Street Volume, percent of total = 5.3%
Percent of Left Turns from Minor Street = 52.9%
Percent of Right Turns from Minor Street = 44.1%
Percent of Minor Street Right Turns to Remove from Warrant Analysis = 0%
WARRANT BASIS = **100%**

Warrant No. 1 - Vehicular Volume is met

Condition A - Minimum Vehicular Volume is not met

Average Major Street % of Warrant				Average Minor Street % of Warrant			
1923.9	/ 600	=	321%	88.7	/ 150	=	59%

Hourly percent of warrant

	7:00 - 8:00	8:00 - 9:00	9:00 - 10:00	10:00 - 11:00	11:00 - 12:00	12:00 - 13:00	13:00 - 14:00	14:00 - 15:00	15:00 - 16:00	16:00 - 17:00	17:00 - 18:00	18:00 - 19:00
Major St.	316%	278%	270%	272%	306%	351%	366%	359%	316%	379%	360%	276%
Minor St.	81%	60%	52%	45%	53%	47%	65%	53%	66%	52%	67%	68%

Condition B - Interruption to Continuous Traffic is met

Average Major Street % of Warrant				Average Minor Street % of Warrant			
1923.9	/ 900	=	214%	88.7	/ 75	=	118%

Hourly percent of warrant

	7:00 - 8:00	8:00 - 9:00	9:00 - 10:00	10:00 - 11:00	11:00 - 12:00	12:00 - 13:00	13:00 - 14:00	14:00 - 15:00	15:00 - 16:00	16:00 - 17:00	17:00 - 18:00	18:00 - 19:00
Major St.	211%	185%	180%	181%	204%	234%	244%	239%	211%	252%	240%	184%
Minor St.	161%	120%	104%	89%	107%	95%	131%	107%	132%	104%	133%	136%

80% Combination of Conditions A & B is not met

Warrant No. 2 - Four Hour Vehicular Volume is met

Hourly percent of warrant

	7:00 - 8:00	8:00 - 9:00	9:00 - 10:00	10:00 - 11:00	11:00 - 12:00	12:00 - 13:00	13:00 - 14:00	14:00 - 15:00	15:00 - 16:00	16:00 - 17:00	17:00 - 18:00	18:00 - 19:00
Minor St.	151%	113%	98%	84%	100%	89%	123%	100%	124%	98%	125%	128%

Warrant No. 3 - Peak Hour is met

	Percent of warrant		Percent of warrant
Overall Peak Hour:	16:15 - 17:15	Higher Volume Side Street Peak Hour:	7:00 - 8:00
Minor St.	89%	Minor St.	121%

Warrant No. 4 - Pedestrian Volume. Pedestrian volume shown are minumum volumes assuming heavy major street traffic. If these volumes are met, warrant 4 requires further engineering analysis

Minimum 4 hour ped. volume crossing major street: 107

Minimum peak hour ped. volume crossing major street: 133

Number of pedestrians crossing major street

	7:00 - 8:00	8:00 - 9:00	9:00 - 10:00	10:00 - 11:00	11:00 - 12:00	12:00 - 13:00	13:00 - 14:00	14:00 - 15:00	15:00 - 16:00	16:00 - 17:00	17:00 - 18:00	18:00 - 19:00
Major St.	1	1	2	2	0	3	0	3	4	16	3	1

Warrant No. 7 - Crash Experience (Requires 3 criteria analysis by engineering)

Total Number: 0 From: 1/1/2005 to 1/1/2008

Accident Rate: 0.00 per million entering vehicles

Types of Accidents	No.	/	Avg.		No.	/	Avg.
Right Angle	0	/	0.0	Rear End	0	/	0.0
Lost Control	0	/	0.0	Side Swipe	0	/	0.0
Left Turn	0	/	0.0	Other	0	/	0.0

Appendix B—2040 Peak Hour Volumes

TransModeler 2040 No-Build
Peak Hour Volumes

Carolina Crossroads
2040 No-Build Interchange Volumes

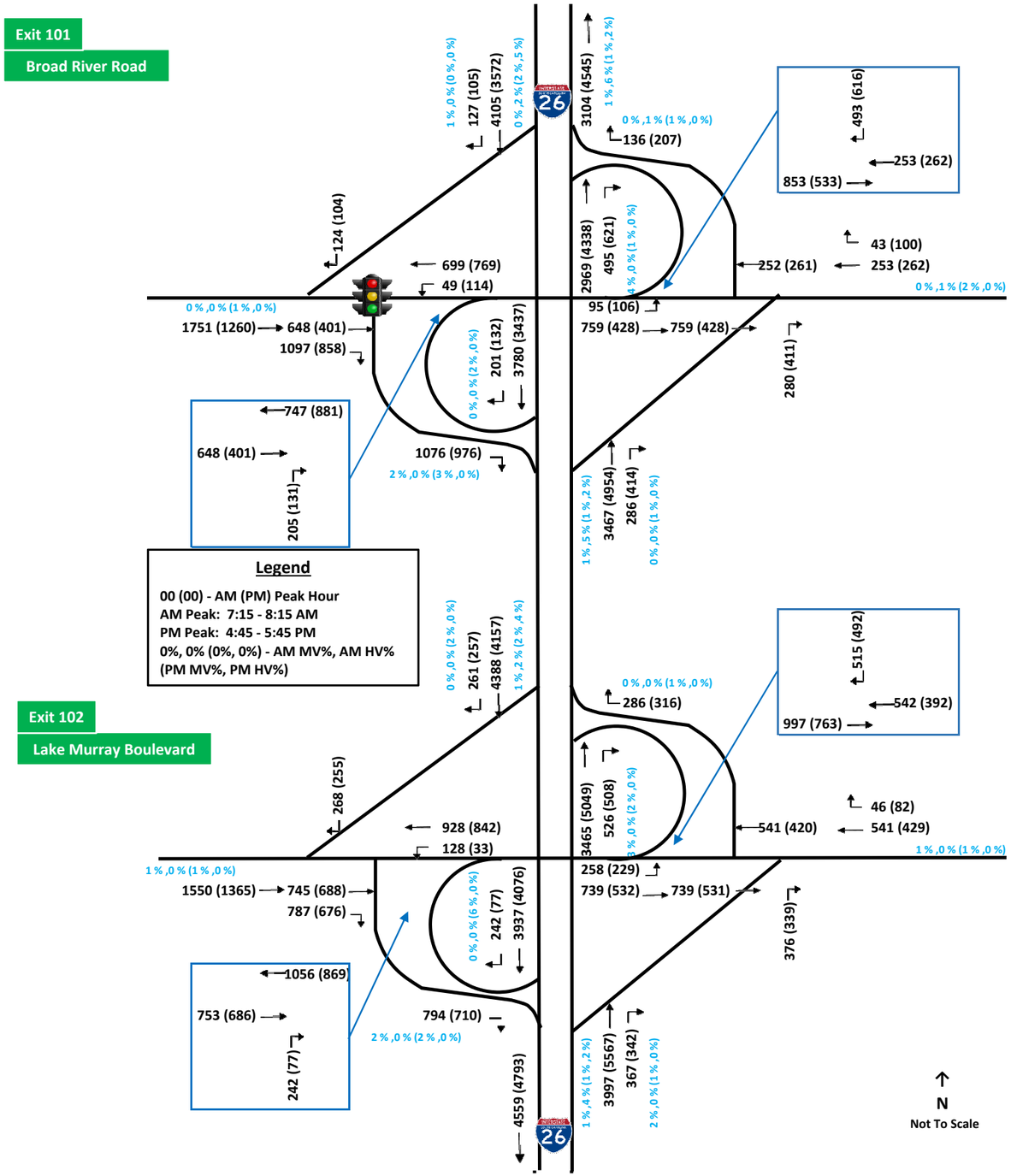

Carolina Crossroads
2040 No-Build Interchange Volumes

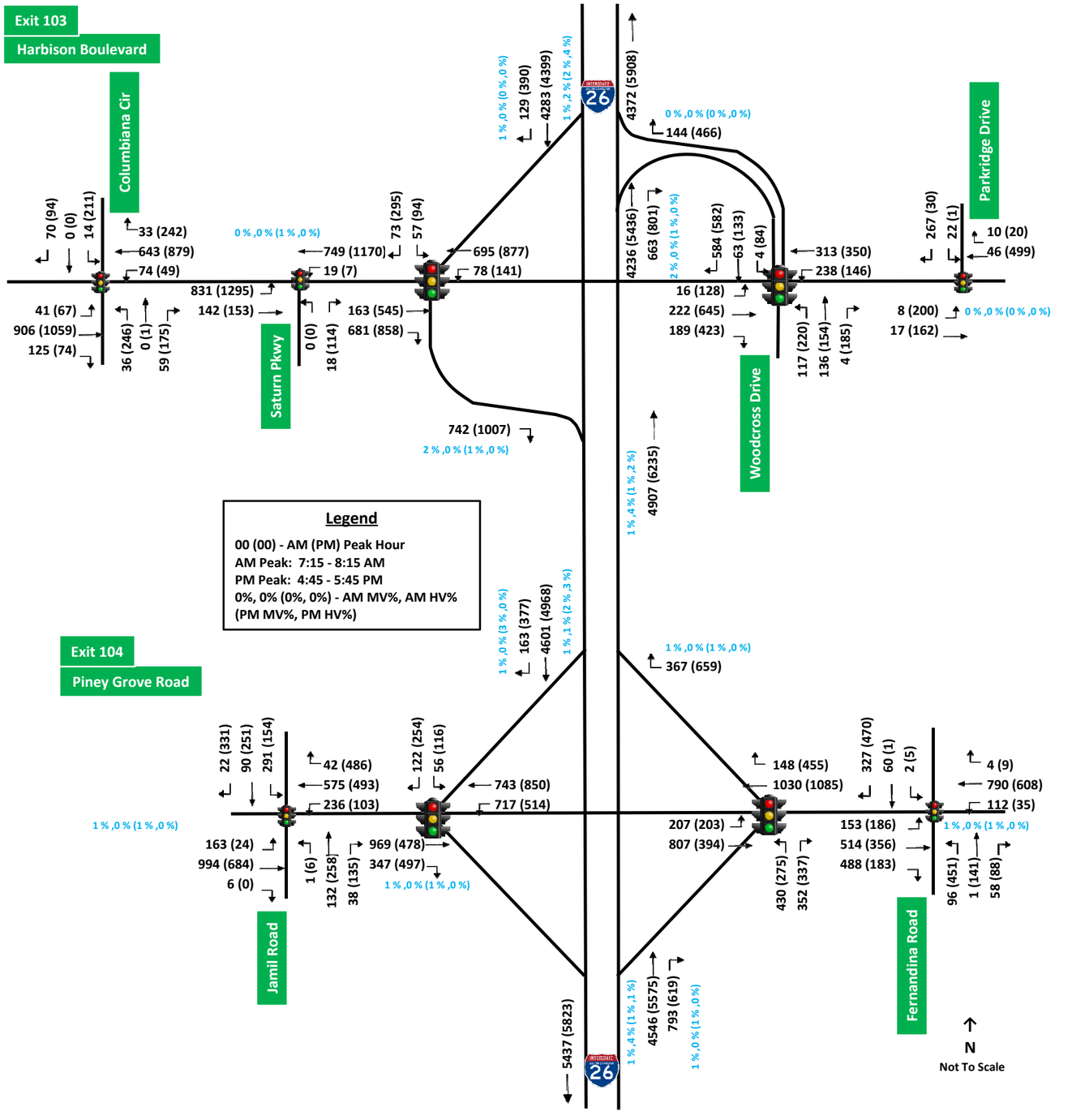

Carolina Crossroads
2040 No-Build Interchange Volumes

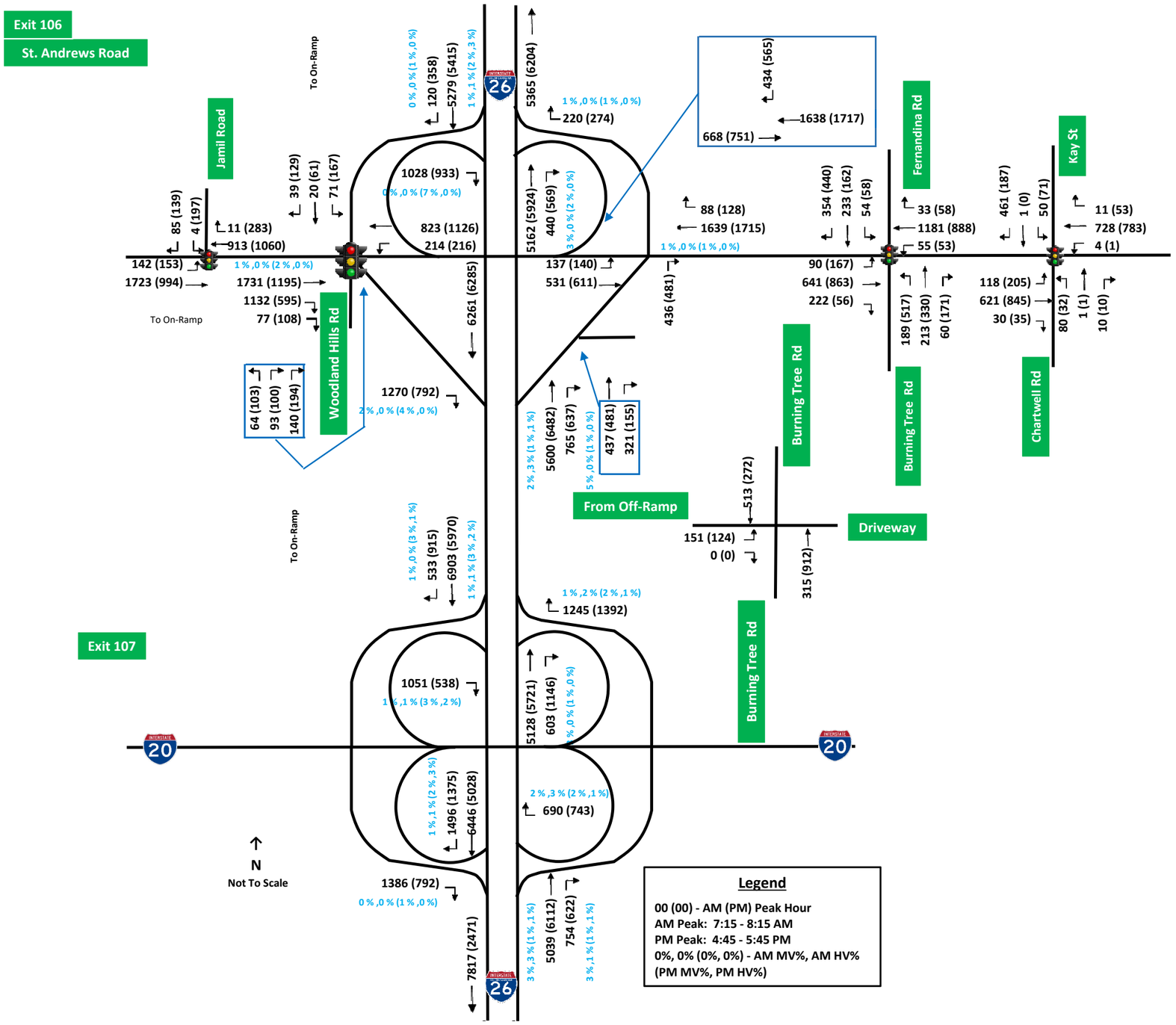

Carolina Crossroads
2040 No-Build Interchange Volumes

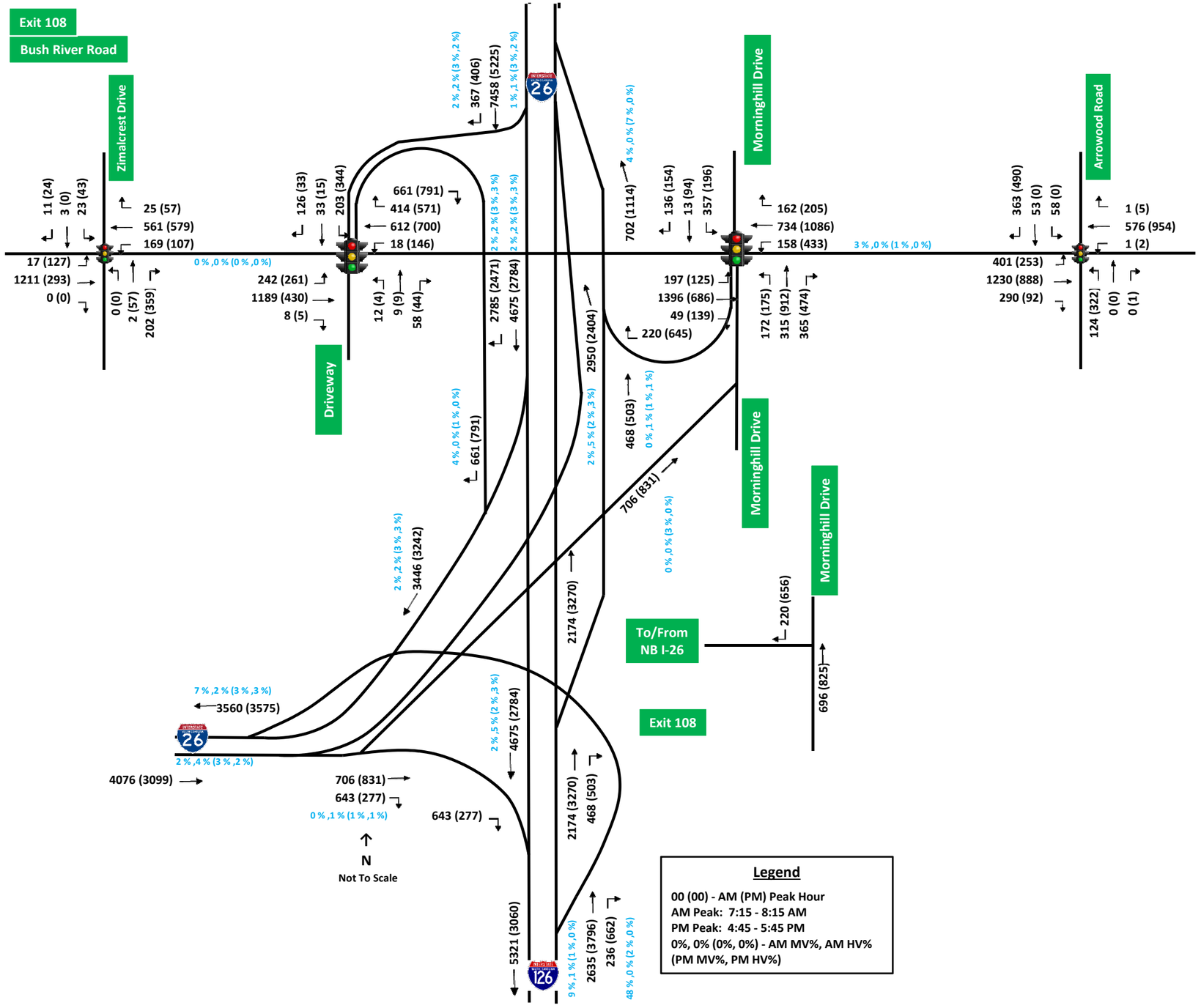

Carolina Crossroads
2040 No-Build Interchange Volumes

Exit 110
Sunset Boulevard

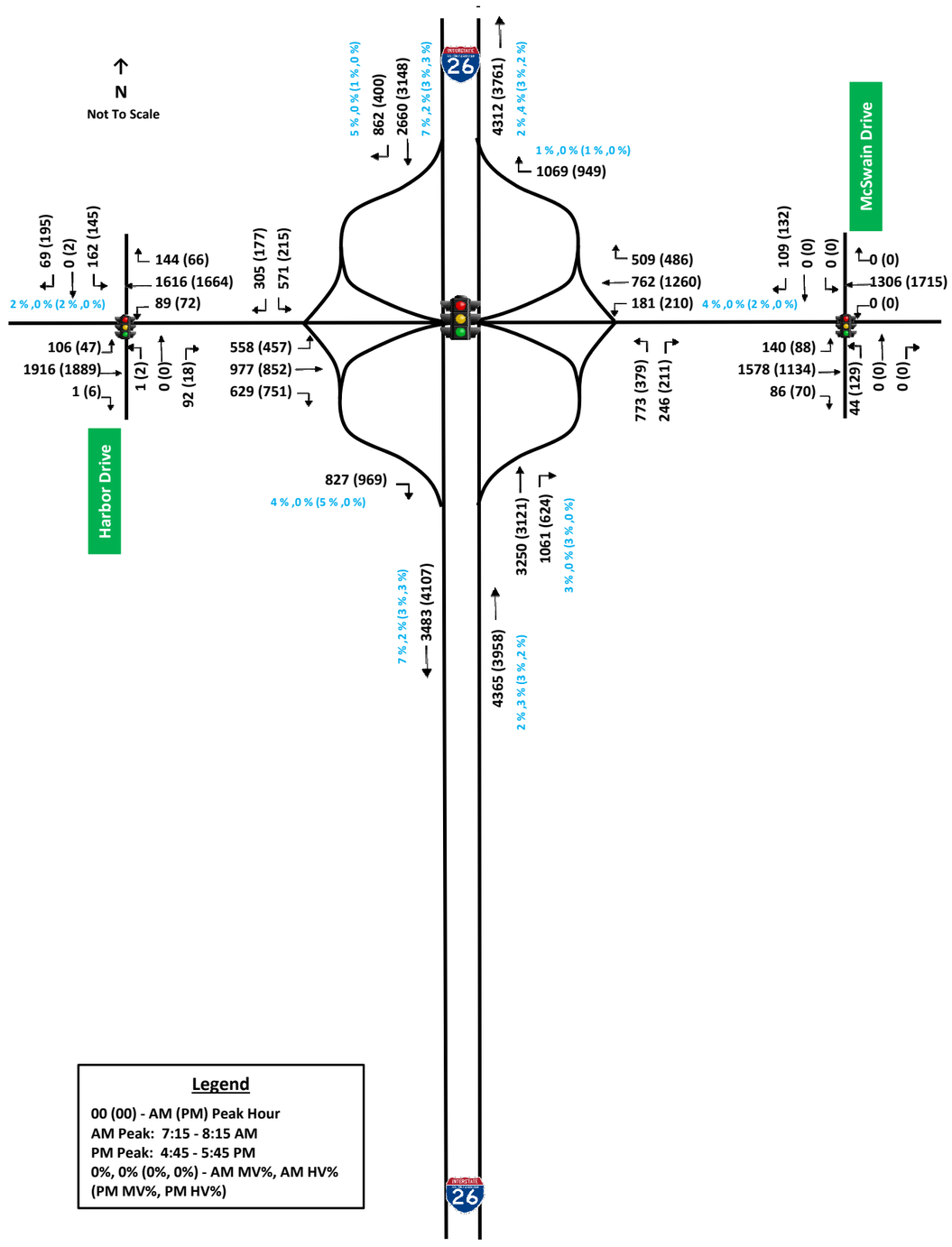

Legend

00 (00) - AM (PM) Peak Hour
AM Peak: 7:15 - 8:15 AM
PM Peak: 4:45 - 5:45 PM
0%, 0% (0%, 0%) - AM MV%, AM HV%
(PM MV%, PM HV%)

Carolina Crossroads
2040 No-Build Interchange Volumes

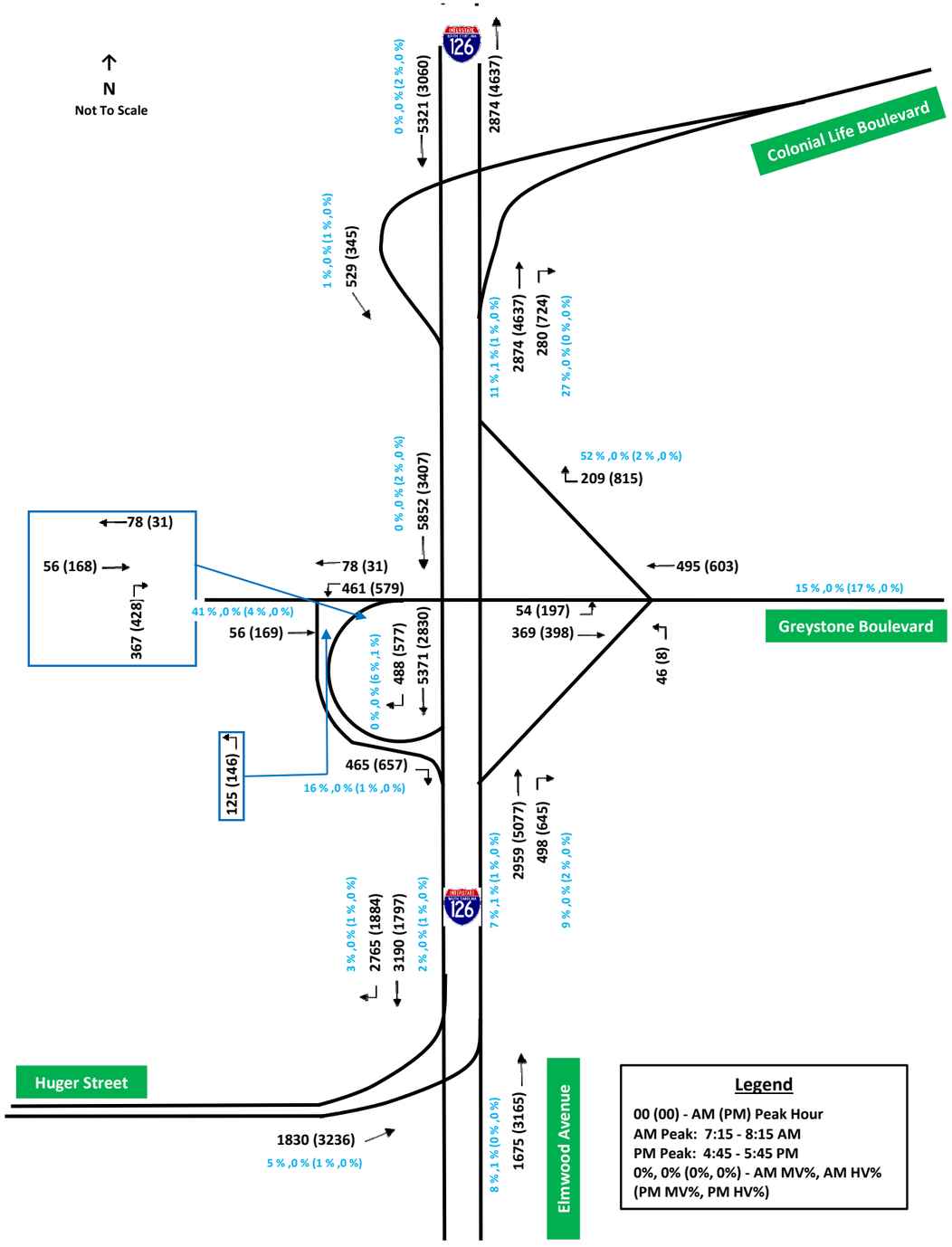

Carolina Crossroads
2040 No-Build Interchange Volumes

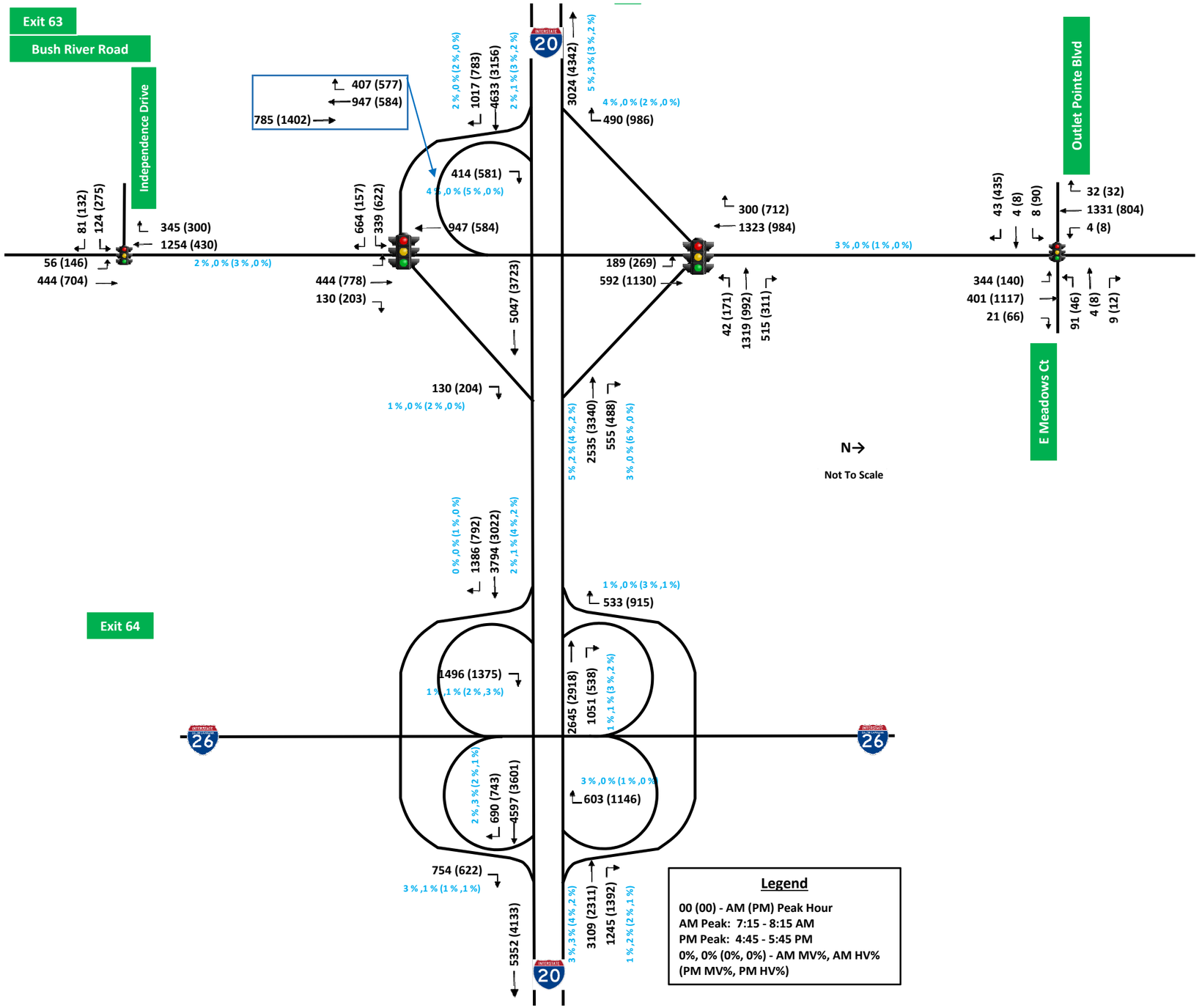

Carolina Crossroads
2040 No-Build Interchange Volumes

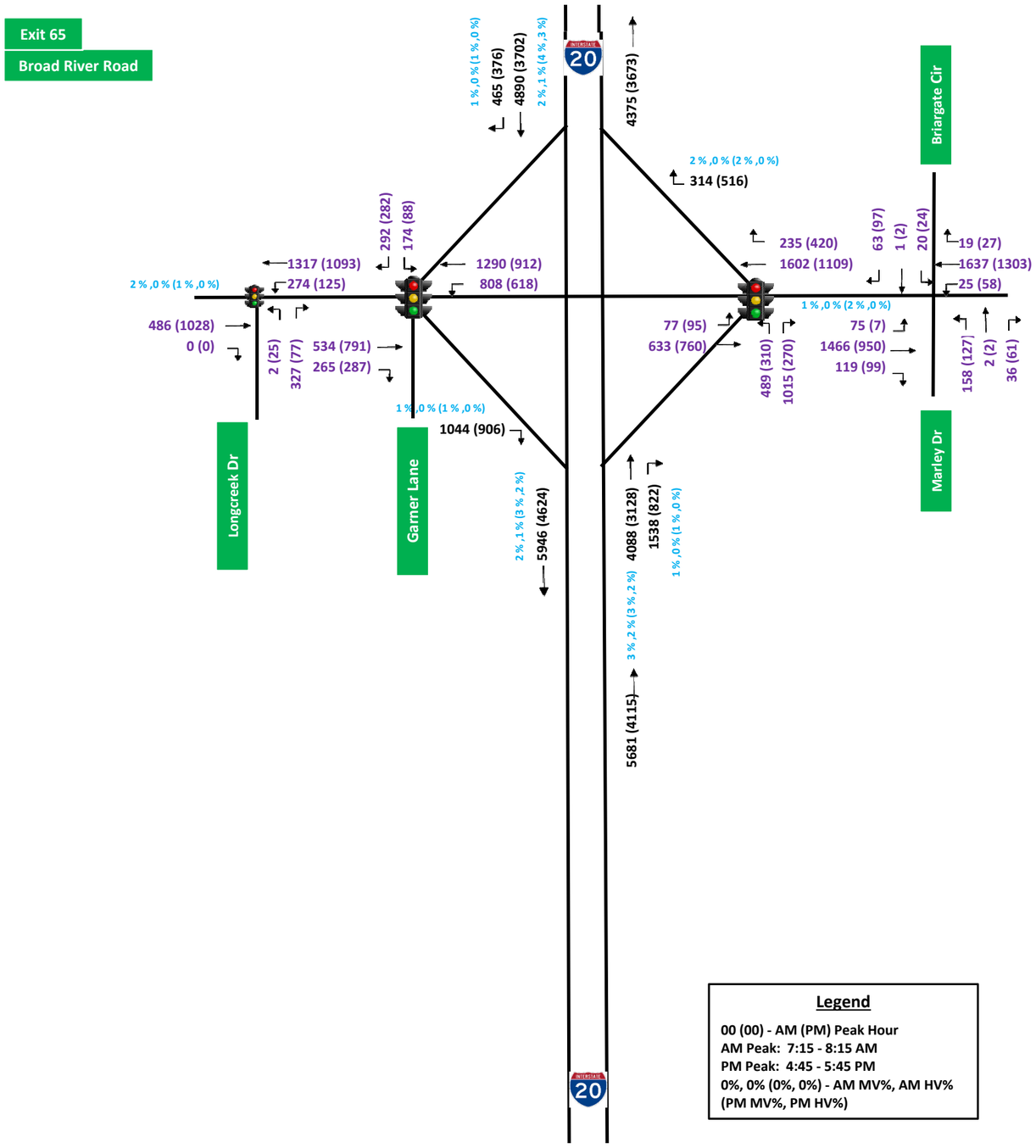

Legend

00 (00) - AM (PM) Peak Hour
AM Peak: 7:15 - 8:15 AM
PM Peak: 4:45 - 5:45 PM
0%, 0% (0%, 0%) - AM MV%, AM HV%
(PM MV%, PM HV%)

TransModeler 2040 Build RRPA
Peak Hour Volumes

Carolina Crossroads
2040 RRPA Interchange Volumes

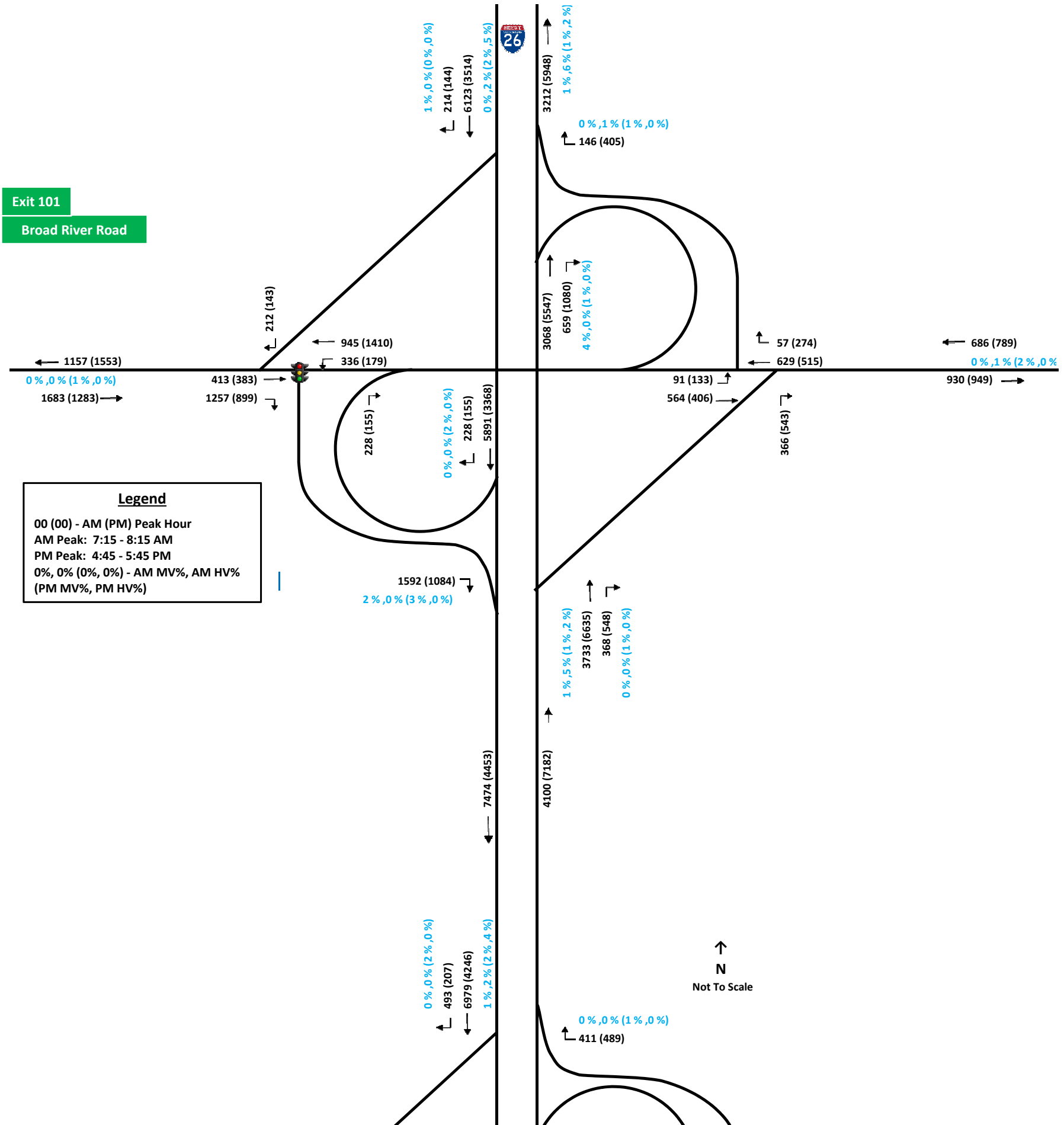

Carolina Crossroads
2040 RRPA Interchange Volumes

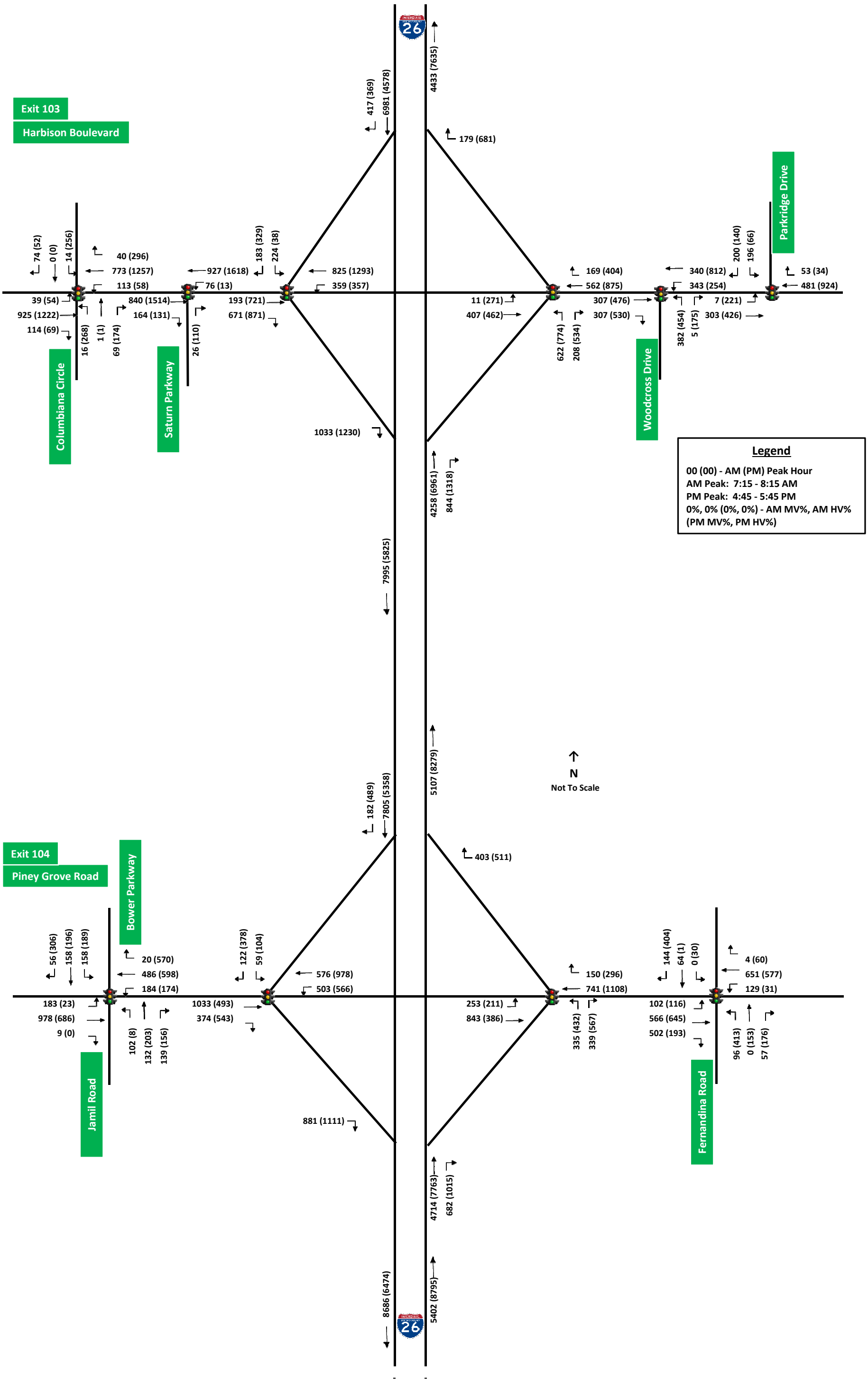

Carolina Crossroads
2040 RRPA Interchange Volumes

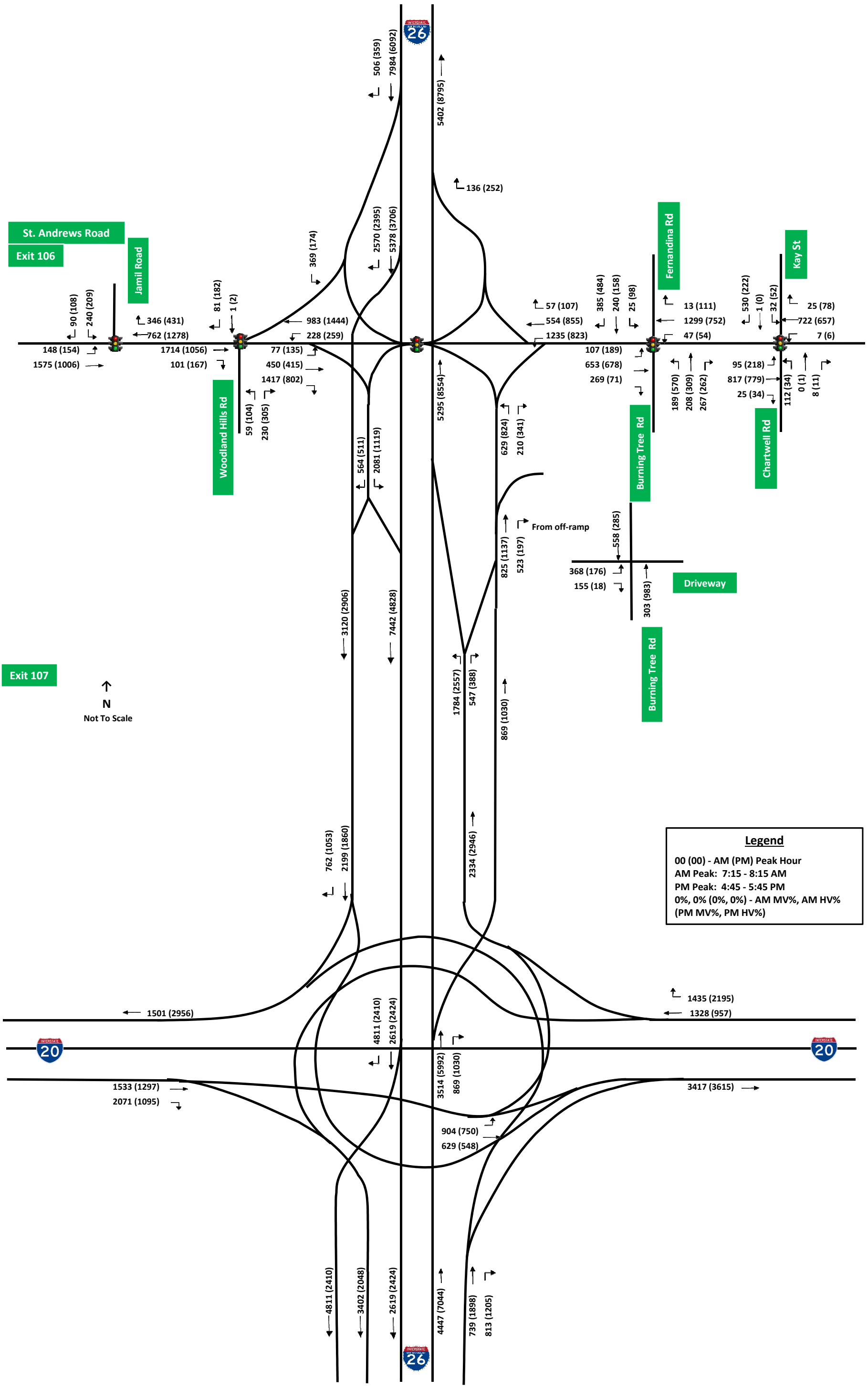

Carolina Crossroads
2040 RRPA Interchange Volumes

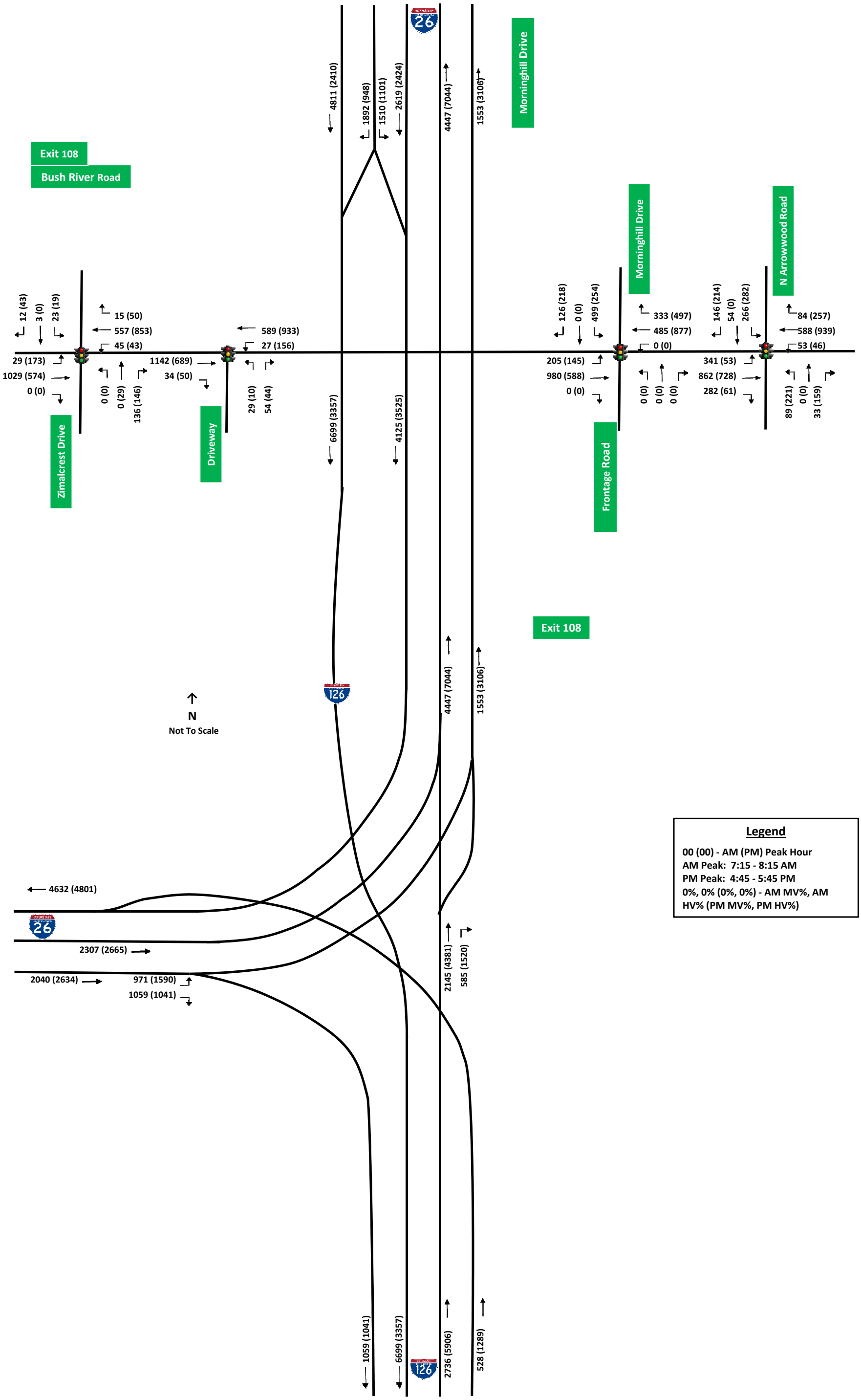

Legend

00 (00) - AM (PM) Peak Hour
AM Peak: 7:15 - 8:15 AM
PM Peak: 4:45 - 5:45 PM
0%, 0% (0%, 0%) - AM MV%, AM HV% (PM MV%, PM HV%)

Carolina Crossroads
2040 RRPA Interchange Volumes

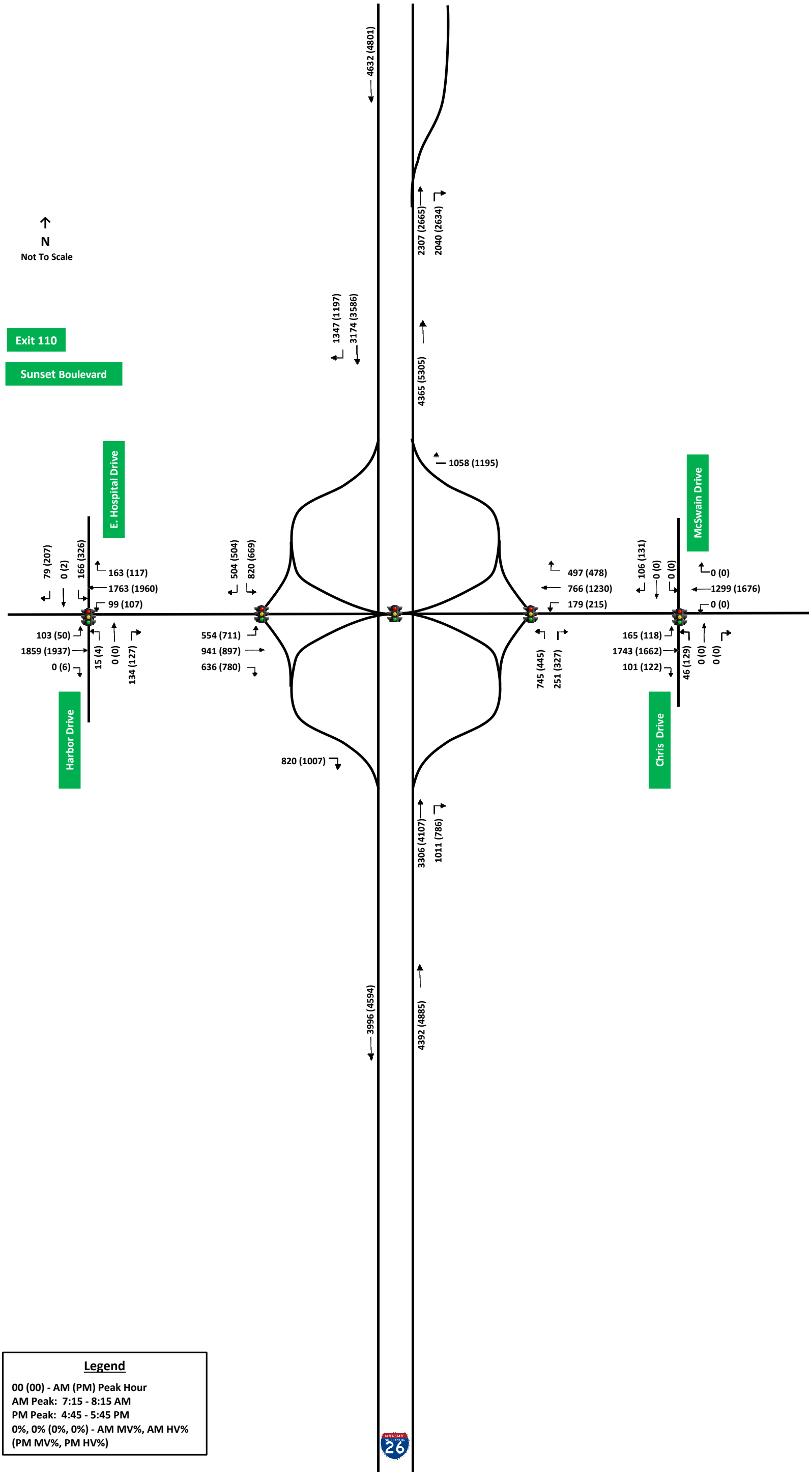

Legend

00 (00) - AM (PM) Peak Hour
AM Peak: 7:15 - 8:15 AM
PM Peak: 4:45 - 5:45 PM
0%, 0% (0%, 0%) - AM MV%, AM HV% (PM MV%, PM HV%)

Carolina Crossroads
2040 RRPA Interchange Volumes

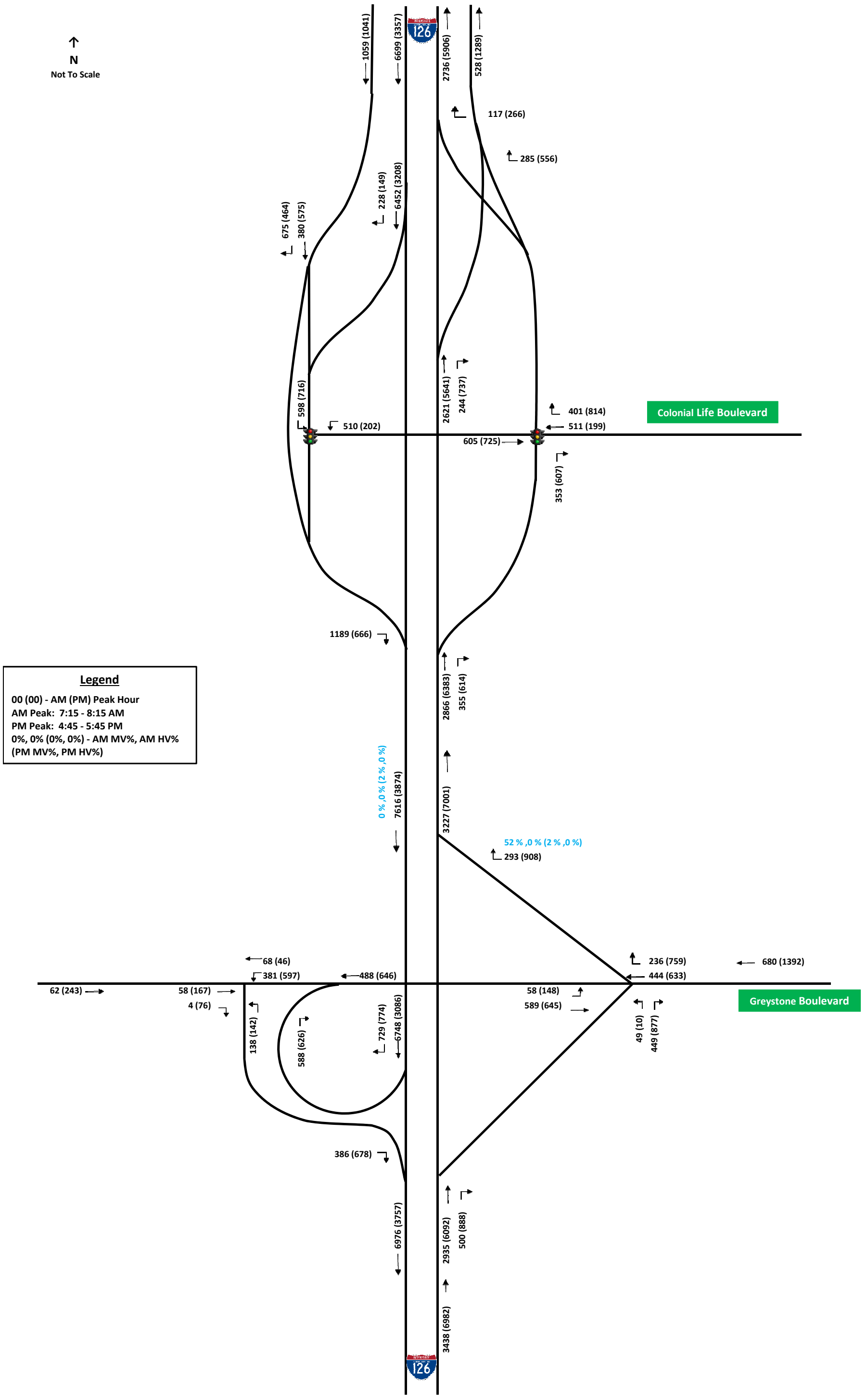

Carolina Crossroads
2040 RRPA Interchange Volumes

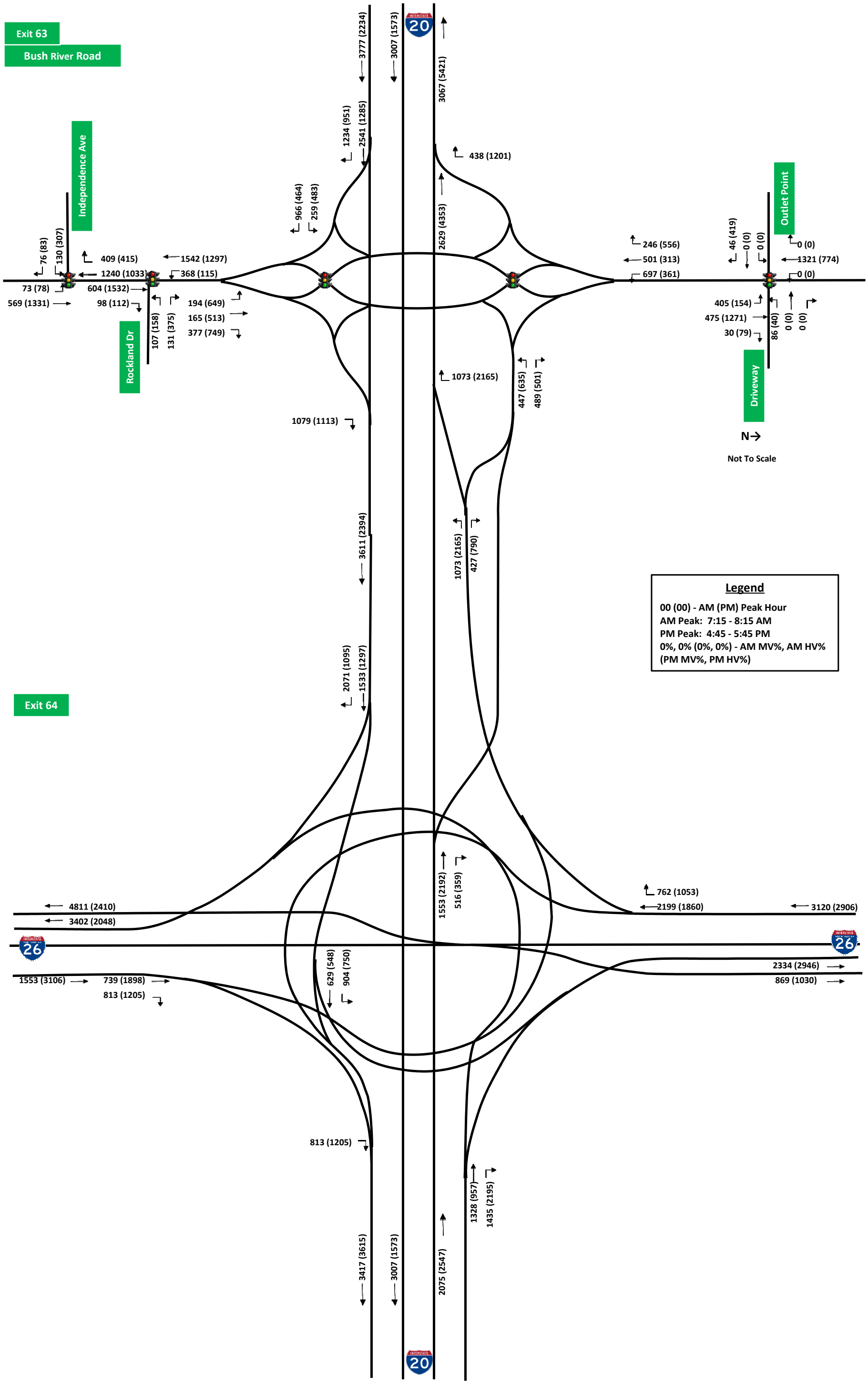

Carolina Crossroads
2040 RRPA Interchange Volumes

Exit 65

Broad River Road

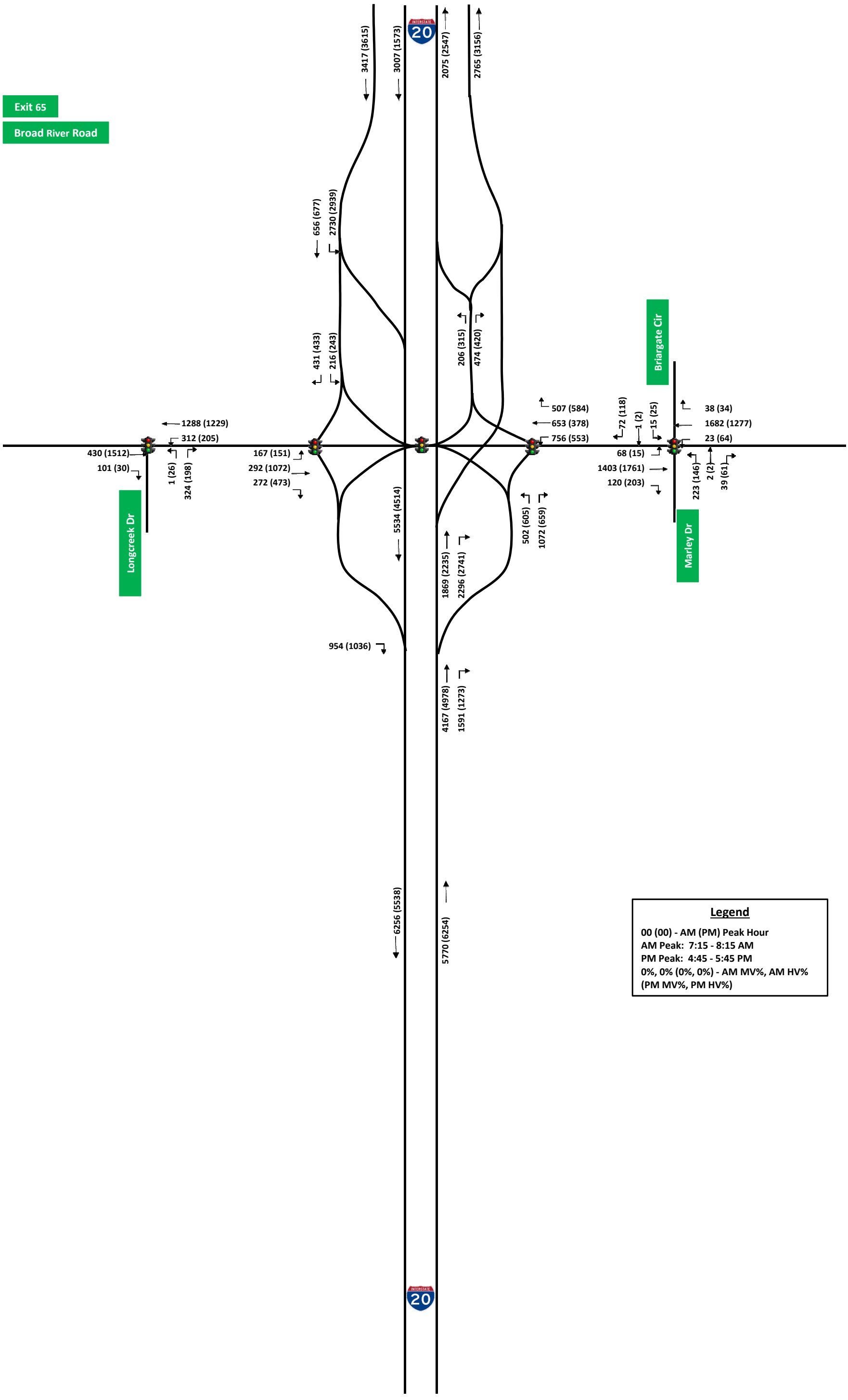

Legend

00 (00) - AM (PM) Peak Hour
AM Peak: 7:15 - 8:15 AM
PM Peak: 4:45 - 5:45 PM
0%, 0% (0%, 0%) - AM MV%, AM HV%
(PM MV%, PM HV%)

Appendix C— TransModeler Density Outputs

Existing AM

ID	Run	Density	Name (Type)	Direction
2466	1	32.864322	I-20 EB (Weaving Analysis)	E
2466	2	34.265022	I-20 EB (Weaving Analysis)	E
2466	3	31.880658	I-20 EB (Weaving Analysis)	E
2466	4	34.999369	I-20 EB (Weaving Analysis)	E
2466	5	35.080963	I-20 EB (Weaving Analysis)	E
2466	6	31.608678	I-20 EB (Weaving Analysis)	E
2466	7	33.603202	I-20 EB (Weaving Analysis)	E
2466	8	32.846189	I-20 EB (Weaving Analysis)	E
2466	9	33.557872	I-20 EB (Weaving Analysis)	E
2466	10	31.576947	I-20 EB (Weaving Analysis)	E
2467	1	19.6053	I-20 WB (Weaving Analysis)	W
2467	2	19.15774	I-20 WB (Weaving Analysis)	W
2467	3	19.894576	I-20 WB (Weaving Analysis)	W
2467	4	17.886015	I-20 WB (Weaving Analysis)	W
2467	5	22.028672	I-20 WB (Weaving Analysis)	W
2467	6	19.108618	I-20 WB (Weaving Analysis)	W
2467	7	18.699264	I-20 WB (Weaving Analysis)	W
2467	8	19.528887	I-20 WB (Weaving Analysis)	W
2467	9	20.707825	I-20 WB (Weaving Analysis)	W
2467	10	18.355407	I-20 WB (Weaving Analysis)	W
2806	1	43.533556	I-20 EB (Basic Analysis)	NE
2806	2	43.678865	I-20 EB (Basic Analysis)	NE
2806	3	43.307263	I-20 EB (Basic Analysis)	NE
2806	4	43.59055	I-20 EB (Basic Analysis)	NE
2806	5	43.666997	I-20 EB (Basic Analysis)	NE
2806	6	44.127079	I-20 EB (Basic Analysis)	NE
2806	7	43.881854	I-20 EB (Basic Analysis)	NE
2806	8	43.895512	I-20 EB (Basic Analysis)	NE
2806	9	43.292905	I-20 EB (Basic Analysis)	NE
2806	10	43.405572	I-20 EB (Basic Analysis)	NE
2807	1	43.533556	I-20 EB (Basic Analysis)	NE
2807	2	43.678865	I-20 EB (Basic Analysis)	NE
2807	3	43.307263	I-20 EB (Basic Analysis)	NE
2807	4	43.59055	I-20 EB (Basic Analysis)	NE
2807	5	43.666997	I-20 EB (Basic Analysis)	NE
2807	6	44.127079	I-20 EB (Basic Analysis)	NE
2807	7	43.881854	I-20 EB (Basic Analysis)	NE
2807	8	43.895512	I-20 EB (Basic Analysis)	NE
2807	9	43.292905	I-20 EB (Basic Analysis)	NE
2807	10	43.405572	I-20 EB (Basic Analysis)	NE
2808	1	35.977092	I-20 EB (Diverge Analysis)	NE
2808	2	37.407976	I-20 EB (Diverge Analysis)	NE
2808	3	36.211752	I-20 EB (Diverge Analysis)	NE
2808	4	36.114651	I-20 EB (Diverge Analysis)	NE
2808	5	36.423485	I-20 EB (Diverge Analysis)	NE
2808	6	38.130836	I-20 EB (Diverge Analysis)	NE
2808	7	37.131509	I-20 EB (Diverge Analysis)	NE
2808	8	37.039803	I-20 EB (Diverge Analysis)	NE
2808	9	35.456526	I-20 EB (Diverge Analysis)	NE
2808	10	36.869878	I-20 EB (Diverge Analysis)	NE
2813	1	12.106883	I-20 WB (Merge Analysis)	S
2813	2	11.252617	I-20 WB (Merge Analysis)	S
2813	3	11.504532	I-20 WB (Merge Analysis)	S
2813	4	13.004798	I-20 WB (Merge Analysis)	S
2813	5	12.589512	I-20 WB (Merge Analysis)	S
2813	6	12.22037	I-20 WB (Merge Analysis)	S
2813	7	11.840003	I-20 WB (Merge Analysis)	S
2813	8	13.57223	I-20 WB (Merge Analysis)	S
2813	9	13.11579	I-20 WB (Merge Analysis)	S
2813	10	12.328868	I-20 WB (Merge Analysis)	S
2814	1	15.367391	I-20 WB (Basic Analysis)	S
2814	2	15.657885	I-20 WB (Basic Analysis)	S
2814	3	15.07052	I-20 WB (Basic Analysis)	S
2814	4	15.575541	I-20 WB (Basic Analysis)	S

Existing AM

ID	Run	Density	Name (Type)	Direction
2814	5	16.153315	I-20 WB (Basic Analysis)	S
2814	6	15.595604	I-20 WB (Basic Analysis)	S
2814	7	15.212511	I-20 WB (Basic Analysis)	S
2814	8	15.53972	I-20 WB (Basic Analysis)	S
2814	9	15.48028	I-20 WB (Basic Analysis)	S
2814	10	15.540299	I-20 WB (Basic Analysis)	S
2815	1	15.367391	I-20 WB (Basic Analysis)	S
2815	2	15.657885	I-20 WB (Basic Analysis)	S
2815	3	15.07052	I-20 WB (Basic Analysis)	S
2815	4	15.575541	I-20 WB (Basic Analysis)	S
2815	5	16.153315	I-20 WB (Basic Analysis)	S
2815	6	15.595604	I-20 WB (Basic Analysis)	S
2815	7	15.212511	I-20 WB (Basic Analysis)	S
2815	8	15.53972	I-20 WB (Basic Analysis)	S
2815	9	15.48028	I-20 WB (Basic Analysis)	S
2815	10	15.540299	I-20 WB (Basic Analysis)	S
2822	1	7.25058	I-20 WB (Merge Analysis)	SW
2822	2	7.44819	I-20 WB (Merge Analysis)	SW
2822	3	6.909032	I-20 WB (Merge Analysis)	SW
2822	4	10.095188	I-20 WB (Merge Analysis)	SW
2822	5	6.450381	I-20 WB (Merge Analysis)	SW
2822	6	7.348165	I-20 WB (Merge Analysis)	SW
2822	7	8.738754	I-20 WB (Merge Analysis)	SW
2822	8	8.075175	I-20 WB (Merge Analysis)	SW
2822	9	8.409404	I-20 WB (Merge Analysis)	SW
2822	10	7.340846	I-20 WB (Merge Analysis)	SW
2823	1	474.487431	I-20 WB (Basic Analysis)	SW
2823	2	139.555127	I-20 WB (Basic Analysis)	SW
2823	3	358.191492	I-20 WB (Basic Analysis)	SW
2823	4	297.717603	I-20 WB (Basic Analysis)	SW
2823	5	302.369442	I-20 WB (Basic Analysis)	SW
2823	6	139.555127	I-20 WB (Basic Analysis)	SW
2823	7	576.827856	I-20 WB (Basic Analysis)	SW
2823	8	395.406193	I-20 WB (Basic Analysis)	SW
2823	9	441.924569	I-20 WB (Basic Analysis)	SW
2823	10	325.62863	I-20 WB (Basic Analysis)	SW
2826	1	21.899824	I-20 EB (Basic Analysis)	NE
2826	2	20.825607	I-20 EB (Basic Analysis)	NE
2826	3	21.910758	I-20 EB (Basic Analysis)	NE
2826	4	21.511685	I-20 EB (Basic Analysis)	NE
2826	5	23.733921	I-20 EB (Basic Analysis)	NE
2826	6	21.027877	I-20 EB (Basic Analysis)	NE
2826	7	22.233296	I-20 EB (Basic Analysis)	NE
2826	8	21.897091	I-20 EB (Basic Analysis)	NE
2826	9	19.901725	I-20 EB (Basic Analysis)	NE
2826	10	21.243814	I-20 EB (Basic Analysis)	NE
2829	1	24.283208	I-20 EB (Merge Analysis)	NE
2829	2	25.865062	I-20 EB (Merge Analysis)	NE
2829	3	26.013826	I-20 EB (Merge Analysis)	NE
2829	4	23.938572	I-20 EB (Merge Analysis)	NE
2829	5	26.232013	I-20 EB (Merge Analysis)	NE
2829	6	25.825392	I-20 EB (Merge Analysis)	NE
2829	7	25.150996	I-20 EB (Merge Analysis)	NE
2829	8	24.317919	I-20 EB (Merge Analysis)	NE
2829	9	25.5477	I-20 EB (Merge Analysis)	NE
2829	10	24.68487	I-20 EB (Merge Analysis)	NE
2830	1	29.810077	I-20 EB (Basic Analysis)	NE
2830	2	32.752816	I-20 EB (Basic Analysis)	NE
2830	3	31.433202	I-20 EB (Basic Analysis)	NE
2830	4	31.98744	I-20 EB (Basic Analysis)	NE
2830	5	31.604752	I-20 EB (Basic Analysis)	NE
2830	6	32.97715	I-20 EB (Basic Analysis)	NE
2830	7	30.971337	I-20 EB (Basic Analysis)	NE
2830	8	29.335016	I-20 EB (Basic Analysis)	NE

Existing AM

ID	Run	Density	Name (Type)	Direction
2830	9	33.029935	I-20 EB (Basic Analysis)	NE
2830	10	31.142887	I-20 EB (Basic Analysis)	NE
2831	1	10.209618	I-20 WB (Basic Analysis)	SW
2831	2	8.355973	I-20 WB (Basic Analysis)	SW
2831	3	9.519264	I-20 WB (Basic Analysis)	SW
2831	4	9.821854	I-20 WB (Basic Analysis)	SW
2831	5	9.440815	I-20 WB (Basic Analysis)	SW
2831	6	8.936498	I-20 WB (Basic Analysis)	SW
2831	7	9.156156	I-20 WB (Basic Analysis)	SW
2831	8	9.826337	I-20 WB (Basic Analysis)	SW
2831	9	9.965305	I-20 WB (Basic Analysis)	SW
2831	10	9.55961	I-20 WB (Basic Analysis)	SW
2837	1	12.732043	I-20 WB (Merge Analysis)	SW
2837	2	11.780769	I-20 WB (Merge Analysis)	SW
2837	3	11.743219	I-20 WB (Merge Analysis)	SW
2837	4	12.451667	I-20 WB (Merge Analysis)	SW
2837	5	11.966017	I-20 WB (Merge Analysis)	SW
2837	6	11.8033	I-20 WB (Merge Analysis)	SW
2837	7	13.377907	I-20 WB (Merge Analysis)	SW
2837	8	13.337854	I-20 WB (Merge Analysis)	SW
2837	9	12.699499	I-20 WB (Merge Analysis)	SW
2837	10	11.067314	I-20 WB (Merge Analysis)	SW
2838	1	18.460258	I-20 WB (Basic Analysis)	SW
2838	2	16.948981	I-20 WB (Basic Analysis)	SW
2838	3	16.951005	I-20 WB (Basic Analysis)	SW
2838	4	18.354985	I-20 WB (Basic Analysis)	SW
2838	5	16.814353	I-20 WB (Basic Analysis)	SW
2838	6	17.003642	I-20 WB (Basic Analysis)	SW
2838	7	17.477371	I-20 WB (Basic Analysis)	SW
2838	8	18.422805	I-20 WB (Basic Analysis)	SW
2838	9	18.613107	I-20 WB (Basic Analysis)	SW
2838	10	17.70715	I-20 WB (Basic Analysis)	SW
2839	1	19.738436	I-20 WB (Diverge Analysis)	SW
2839	2	19.536715	I-20 WB (Diverge Analysis)	SW
2839	3	18.825647	I-20 WB (Diverge Analysis)	SW
2839	4	18.934072	I-20 WB (Diverge Analysis)	SW
2839	5	20.678962	I-20 WB (Diverge Analysis)	SW
2839	6	19.972938	I-20 WB (Diverge Analysis)	SW
2839	7	19.269434	I-20 WB (Diverge Analysis)	SW
2839	8	19.211439	I-20 WB (Diverge Analysis)	SW
2839	9	21.750607	I-20 WB (Diverge Analysis)	SW
2839	10	19.198832	I-20 WB (Diverge Analysis)	SW
2840	1	19.738436	I-20 WB (Diverge Analysis)	SW
2840	2	19.536715	I-20 WB (Diverge Analysis)	SW
2840	3	18.825647	I-20 WB (Diverge Analysis)	SW
2840	4	18.934072	I-20 WB (Diverge Analysis)	SW
2840	5	20.678962	I-20 WB (Diverge Analysis)	SW
2840	6	19.972938	I-20 WB (Diverge Analysis)	SW
2840	7	19.269434	I-20 WB (Diverge Analysis)	SW
2840	8	19.211439	I-20 WB (Diverge Analysis)	SW
2840	9	21.750607	I-20 WB (Diverge Analysis)	SW
2840	10	19.198832	I-20 WB (Diverge Analysis)	SW
2843	1	29.17255	I-20 EB (Merge Analysis)	NE
2843	2	29.315891	I-20 EB (Merge Analysis)	NE
2843	3	27.962115	I-20 EB (Merge Analysis)	NE
2843	4	31.230644	I-20 EB (Merge Analysis)	NE
2843	5	30.31043	I-20 EB (Merge Analysis)	NE
2843	6	29.800774	I-20 EB (Merge Analysis)	NE
2843	7	28.537249	I-20 EB (Merge Analysis)	NE
2843	8	28.002817	I-20 EB (Merge Analysis)	NE
2843	9	28.301886	I-20 EB (Merge Analysis)	NE
2843	10	27.418835	I-20 EB (Merge Analysis)	NE
2844	1	29.17255	I-20 EB (Merge Analysis)	NE
2844	2	29.315891	I-20 EB (Merge Analysis)	NE

Existing AM

ID	Run	Density	Name (Type)	Direction
2844	3	27.962115	I-20 EB (Merge Analysis)	NE
2844	4	31.230644	I-20 EB (Merge Analysis)	NE
2844	5	30.31043	I-20 EB (Merge Analysis)	NE
2844	6	29.800774	I-20 EB (Merge Analysis)	NE
2844	7	28.537249	I-20 EB (Merge Analysis)	NE
2844	8	28.002817	I-20 EB (Merge Analysis)	NE
2844	9	28.301886	I-20 EB (Merge Analysis)	NE
2844	10	27.418835	I-20 EB (Merge Analysis)	NE
2848	1	27.373298	I-20 EB (Basic Analysis)	NE
2848	2	28.291444	I-20 EB (Basic Analysis)	NE
2848	3	27.847529	I-20 EB (Basic Analysis)	NE
2848	4	28.516649	I-20 EB (Basic Analysis)	NE
2848	5	30.708072	I-20 EB (Basic Analysis)	NE
2848	6	28.741855	I-20 EB (Basic Analysis)	NE
2848	7	27.637481	I-20 EB (Basic Analysis)	NE
2848	8	28.202661	I-20 EB (Basic Analysis)	NE
2848	9	27.682956	I-20 EB (Basic Analysis)	NE
2848	10	28.737524	I-20 EB (Basic Analysis)	NE
2852	1	12.932373	I-20 WB (Basic Analysis)	SW
2852	2	13.009227	I-20 WB (Basic Analysis)	SW
2852	3	12.623561	I-20 WB (Basic Analysis)	SW
2852	4	13.596109	I-20 WB (Basic Analysis)	SW
2852	5	13.081888	I-20 WB (Basic Analysis)	SW
2852	6	12.788447	I-20 WB (Basic Analysis)	SW
2852	7	12.170823	I-20 WB (Basic Analysis)	SW
2852	8	12.862506	I-20 WB (Basic Analysis)	SW
2852	9	12.549502	I-20 WB (Basic Analysis)	SW
2852	10	13.551394	I-20 WB (Basic Analysis)	SW
2856	1	21.534431	I-20 EB (Basic Analysis)	NE
2856	2	21.586433	I-20 EB (Basic Analysis)	NE
2856	3	21.580655	I-20 EB (Basic Analysis)	NE
2856	4	21.555617	I-20 EB (Basic Analysis)	NE
2856	5	22.437717	I-20 EB (Basic Analysis)	NE
2856	6	22.094892	I-20 EB (Basic Analysis)	NE
2856	7	21.545987	I-20 EB (Basic Analysis)	NE
2856	8	21.307165	I-20 EB (Basic Analysis)	NE
2856	9	21.651916	I-20 EB (Basic Analysis)	NE
2856	10	21.183902	I-20 EB (Basic Analysis)	NE
2859	1	13.344386	I-20 WB (Weaving Analysis)	SW
2859	2	13.35285	I-20 WB (Weaving Analysis)	SW
2859	3	13.879769	I-20 WB (Weaving Analysis)	SW
2859	4	12.356148	I-20 WB (Weaving Analysis)	SW
2859	5	27.556389	I-20 WB (Weaving Analysis)	SW
2859	6	13.600439	I-20 WB (Weaving Analysis)	SW
2859	7	13.274553	I-20 WB (Weaving Analysis)	SW
2859	8	12.474652	I-20 WB (Weaving Analysis)	SW
2859	9	13.001571	I-20 WB (Weaving Analysis)	SW
2859	10	22.257572	I-20 WB (Weaving Analysis)	SW
2863	1	19.541484	I-20 EB (Merge Analysis)	E
2863	2	17.891811	I-20 EB (Merge Analysis)	E
2863	3	18.956954	I-20 EB (Merge Analysis)	E
2863	4	18.717946	I-20 EB (Merge Analysis)	E
2863	5	19.133612	I-20 EB (Merge Analysis)	E
2863	6	18.917985	I-20 EB (Merge Analysis)	E
2863	7	19.094643	I-20 EB (Merge Analysis)	E
2863	8	19.105035	I-20 EB (Merge Analysis)	E
2863	9	19.647998	I-20 EB (Merge Analysis)	E
2863	10	18.842646	I-20 EB (Merge Analysis)	E
4563	1	18.796794	I-126 SB (Merge Analysis)	E
4563	2	18.717594	I-126 SB (Merge Analysis)	E
4563	3	18.283461	I-126 SB (Merge Analysis)	E
4563	4	19.395194	I-126 SB (Merge Analysis)	E
4563	5	19.359994	I-126 SB (Merge Analysis)	E
4563	6	15.628795	I-126 SB (Merge Analysis)	E

Existing AM

ID	Run	Density	Name (Type)	Direction
4563	7	20.049327	I-126 SB (Merge Analysis)	E
4563	8	18.664794	I-126 SB (Merge Analysis)	E
4563	9	18.298128	I-126 SB (Merge Analysis)	E
4563	10	20.706394	I-126 SB (Merge Analysis)	E
4566	1	14.441357	I-126 NB (Basic Analysis)	W
4566	2	14.413461	I-126 NB (Basic Analysis)	W
4566	3	13.755807	I-126 NB (Basic Analysis)	W
4566	4	13.57829	I-126 NB (Basic Analysis)	W
4566	5	14.133662	I-126 NB (Basic Analysis)	W
4566	6	14.233409	I-126 NB (Basic Analysis)	W
4566	7	13.557158	I-126 NB (Basic Analysis)	W
4566	8	12.984879	I-126 NB (Basic Analysis)	W
4566	9	13.716077	I-126 NB (Basic Analysis)	W
4566	10	12.992487	I-126 NB (Basic Analysis)	W
4570	1	11.556613	I-126 NB (Basic Analysis)	NW
4570	2	10.828516	I-126 NB (Basic Analysis)	NW
4570	3	11.930791	I-126 NB (Basic Analysis)	NW
4570	4	10.774892	I-126 NB (Basic Analysis)	NW
4570	5	11.653137	I-126 NB (Basic Analysis)	NW
4570	6	11.617388	I-126 NB (Basic Analysis)	NW
4570	7	11.957008	I-126 NB (Basic Analysis)	NW
4570	8	10.220775	I-126 NB (Basic Analysis)	NW
4570	9	10.964364	I-126 NB (Basic Analysis)	NW
4570	10	11.752044	I-126 NB (Basic Analysis)	NW
4573	1	25.553797	I-126 SB (Basic Analysis)	E
4573	2	24.932834	I-126 SB (Basic Analysis)	E
4573	3	22.724093	I-126 SB (Basic Analysis)	E
4573	4	22.773875	I-126 SB (Basic Analysis)	E
4573	5	25.388731	I-126 SB (Basic Analysis)	E
4573	6	25.417552	I-126 SB (Basic Analysis)	E
4573	7	24.676065	I-126 SB (Basic Analysis)	E
4573	8	25.07956	I-126 SB (Basic Analysis)	E
4573	9	24.482178	I-126 SB (Basic Analysis)	E
4573	10	26.45773	I-126 SB (Basic Analysis)	E
4578	1	24.825253	I-126 SB (Basic Analysis)	E
4578	2	25.442166	I-126 SB (Basic Analysis)	E
4578	3	24.588629	I-126 SB (Basic Analysis)	E
4578	4	25.596816	I-126 SB (Basic Analysis)	E
4578	5	25.748087	I-126 SB (Basic Analysis)	E
4578	6	23.567764	I-126 SB (Basic Analysis)	E
4578	7	24.908071	I-126 SB (Basic Analysis)	E
4578	8	25.071173	I-126 SB (Basic Analysis)	E
4578	9	24.586938	I-126 SB (Basic Analysis)	E
4578	10	25.131174	I-126 SB (Basic Analysis)	E
4579	1	15.935704	I-126 SB (Diverge Analysis)	E
4579	2	16.262577	I-126 SB (Diverge Analysis)	E
4579	3	15.266268	I-126 SB (Diverge Analysis)	E
4579	4	15.577451	I-126 SB (Diverge Analysis)	E
4579	5	14.98908	I-126 SB (Diverge Analysis)	E
4579	6	16.762038	I-126 SB (Diverge Analysis)	E
4579	7	15.177359	I-126 SB (Diverge Analysis)	E
4579	8	16.239042	I-126 SB (Diverge Analysis)	E
4579	9	14.445164	I-126 SB (Diverge Analysis)	E
4579	10	15.394402	I-126 SB (Diverge Analysis)	E
4586	1	12.384687	I-126 NB (Merge Analysis)	NW
4586	2	12.657024	I-126 NB (Merge Analysis)	NW
4586	3	13.241443	I-126 NB (Merge Analysis)	NW
4586	4	12.926416	I-126 NB (Merge Analysis)	NW
4586	5	13.048599	I-126 NB (Merge Analysis)	NW
4586	6	12.639359	I-126 NB (Merge Analysis)	NW
4586	7	12.780679	I-126 NB (Merge Analysis)	NW
4586	8	12.517175	I-126 NB (Merge Analysis)	NW
4586	9	12.261032	I-126 NB (Merge Analysis)	NW
4586	10	13.12662	I-126 NB (Merge Analysis)	NW

Existing AM

ID	Run	Density	Name (Type)	Direction
4587	1	14.741533	I-126 NB (Basic Analysis)	NW
4587	2	14.791134	I-126 NB (Basic Analysis)	NW
4587	3	12.053137	I-126 NB (Basic Analysis)	NW
4587	4	15.55698	I-126 NB (Basic Analysis)	NW
4587	5	15.239531	I-126 NB (Basic Analysis)	NW
4587	6	14.239567	I-126 NB (Basic Analysis)	NW
4587	7	13.949894	I-126 NB (Basic Analysis)	NW
4587	8	13.541179	I-126 NB (Basic Analysis)	NW
4587	9	14.703836	I-126 NB (Basic Analysis)	NW
4587	10	14.99946	I-126 NB (Basic Analysis)	NW
4588	1	11.72512	I-126 NB (Diverge Analysis)	NW
4588	2	12.229884	I-126 NB (Diverge Analysis)	NW
4588	3	12.067589	I-126 NB (Diverge Analysis)	NW
4588	4	12.610217	I-126 NB (Diverge Analysis)	NW
4588	5	12.512403	I-126 NB (Diverge Analysis)	NW
4588	6	11.937864	I-126 NB (Diverge Analysis)	NW
4588	7	11.829649	I-126 NB (Diverge Analysis)	NW
4588	8	11.796201	I-126 NB (Diverge Analysis)	NW
4588	9	12.189738	I-126 NB (Diverge Analysis)	NW
4588	10	13.475979	I-126 NB (Diverge Analysis)	NW
4589	1	11.72512	I-126 NB (Diverge Analysis)	NW
4589	2	12.229884	I-126 NB (Diverge Analysis)	NW
4589	3	12.067589	I-126 NB (Diverge Analysis)	NW
4589	4	12.610217	I-126 NB (Diverge Analysis)	NW
4589	5	12.512403	I-126 NB (Diverge Analysis)	NW
4589	6	11.937864	I-126 NB (Diverge Analysis)	NW
4589	7	11.829649	I-126 NB (Diverge Analysis)	NW
4589	8	11.796201	I-126 NB (Diverge Analysis)	NW
4589	9	12.189738	I-126 NB (Diverge Analysis)	NW
4589	10	13.475979	I-126 NB (Diverge Analysis)	NW
4593	1	25.895332	I-126 SB (Merge Analysis)	SE
4593	2	26.157477	I-126 SB (Merge Analysis)	SE
4593	3	24.942782	I-126 SB (Merge Analysis)	SE
4593	4	25.020647	I-126 SB (Merge Analysis)	SE
4593	5	25.713646	I-126 SB (Merge Analysis)	SE
4593	6	24.23421	I-126 SB (Merge Analysis)	SE
4593	7	24.296502	I-126 SB (Merge Analysis)	SE
4593	8	25.11149	I-126 SB (Merge Analysis)	SE
4593	9	23.595716	I-126 SB (Merge Analysis)	SE
4593	10	25.031029	I-126 SB (Merge Analysis)	SE
4594	1	29.361073	I-126 SB (Basic Analysis)	SE
4594	2	29.69741	I-126 SB (Basic Analysis)	SE
4594	3	28.799989	I-126 SB (Basic Analysis)	SE
4594	4	29.11275	I-126 SB (Basic Analysis)	SE
4594	5	30.343364	I-126 SB (Basic Analysis)	SE
4594	6	29.035739	I-126 SB (Basic Analysis)	SE
4594	7	29.475805	I-126 SB (Basic Analysis)	SE
4594	8	29.786209	I-126 SB (Basic Analysis)	SE
4594	9	28.285268	I-126 SB (Basic Analysis)	SE
4594	10	30.043962	I-126 SB (Basic Analysis)	SE
4599	1	13.374223	I-126 NB (Basic Analysis)	NW
4599	2	11.913039	I-126 NB (Basic Analysis)	NW
4599	3	12.698953	I-126 NB (Basic Analysis)	NW
4599	4	11.266286	I-126 NB (Basic Analysis)	NW
4599	5	12.777659	I-126 NB (Basic Analysis)	NW
4599	6	10.838539	I-126 NB (Basic Analysis)	NW
4599	7	12.562074	I-126 NB (Basic Analysis)	NW
4599	8	11.295943	I-126 NB (Basic Analysis)	NW
4599	9	11.902774	I-126 NB (Basic Analysis)	NW
4599	10	12.17311	I-126 NB (Basic Analysis)	NW
4601	1	13.315677	I-126 NB (Basic Analysis)	NW
4601	2	13.46239	I-126 NB (Basic Analysis)	NW
4601	3	12.416325	I-126 NB (Basic Analysis)	NW
4601	4	13.072133	I-126 NB (Basic Analysis)	NW

Existing AM

ID	Run	Density	Name (Type)	Direction
4601	5	12.869669	I-126 NB (Basic Analysis)	NW
4601	6	13.757283	I-126 NB (Basic Analysis)	NW
4601	7	12.62906	I-126 NB (Basic Analysis)	NW
4601	8	12.530762	I-126 NB (Basic Analysis)	NW
4601	9	13.240853	I-126 NB (Basic Analysis)	NW
4601	10	12.454471	I-126 NB (Basic Analysis)	NW
4602	1	7.54246	; WB EXPRESSWAY TO I-26 WB (Basic Anal	NW
4602	2	5.830605	; WB EXPRESSWAY TO I-26 WB (Basic Anal	NW
4602	3	8.520664	; WB EXPRESSWAY TO I-26 WB (Basic Anal	NW
4602	4	6.487031	; WB EXPRESSWAY TO I-26 WB (Basic Anal	NW
4602	5	7.130586	; WB EXPRESSWAY TO I-26 WB (Basic Anal	NW
4602	6	7.285039	; WB EXPRESSWAY TO I-26 WB (Basic Anal	NW
4602	7	7.362265	; WB EXPRESSWAY TO I-26 WB (Basic Anal	NW
4602	8	6.989003	; WB EXPRESSWAY TO I-26 WB (Basic Anal	NW
4602	9	5.457343	; WB EXPRESSWAY TO I-26 WB (Basic Anal	NW
4602	10	7.671171	; WB EXPRESSWAY TO I-26 WB (Basic Anal	NW
4603	1	19.511169	I-126 NB (Basic Analysis)	NW
4603	2	18.842777	I-126 NB (Basic Analysis)	NW
4603	3	18.960112	I-126 NB (Basic Analysis)	NW
4603	4	19.861079	I-126 NB (Basic Analysis)	NW
4603	5	19.603361	I-126 NB (Basic Analysis)	NW
4603	6	18.876301	I-126 NB (Basic Analysis)	NW
4603	7	17.946001	I-126 NB (Basic Analysis)	NW
4603	8	18.28753	I-126 NB (Basic Analysis)	NW
4603	9	18.754776	I-126 NB (Basic Analysis)	NW
4603	10	20.37023	I-126 NB (Basic Analysis)	NW
4609	1	30.609742	I-126 SB (Basic Analysis)	SE
4609	2	30.489389	I-126 SB (Basic Analysis)	SE
4609	3	29.167868	I-126 SB (Basic Analysis)	SE
4609	4	30.13305	I-126 SB (Basic Analysis)	SE
4609	5	31.782592	I-126 SB (Basic Analysis)	SE
4609	6	29.63512	I-126 SB (Basic Analysis)	SE
4609	7	31.166669	I-126 SB (Basic Analysis)	SE
4609	8	30.772572	I-126 SB (Basic Analysis)	SE
4609	9	29.363736	I-126 SB (Basic Analysis)	SE
4609	10	30.98024	I-126 SB (Basic Analysis)	SE
4611	1	52.908518	I-26 EB (Diverge Analysis)	SE
4611	2	52.779451	I-26 EB (Diverge Analysis)	SE
4611	3	52.521318	I-26 EB (Diverge Analysis)	SE
4611	4	49.725852	I-26 EB (Diverge Analysis)	SE
4611	5	53.729851	I-26 EB (Diverge Analysis)	SE
4611	6	51.529851	I-26 EB (Diverge Analysis)	SE
4611	7	53.301584	I-26 EB (Diverge Analysis)	SE
4611	8	49.379719	I-26 EB (Diverge Analysis)	SE
4611	9	50.042651	I-26 EB (Diverge Analysis)	SE
4611	10	53.79145	I-26 EB (Diverge Analysis)	SE
4619	1	32.576595	I-26 WB (Basic Analysis)	NW
4619	2	28.540557	I-26 WB (Basic Analysis)	NW
4619	3	31.201681	I-26 WB (Basic Analysis)	NW
4619	4	27.010411	I-26 WB (Basic Analysis)	NW
4619	5	29.383246	I-26 WB (Basic Analysis)	NW
4619	6	28.717965	I-26 WB (Basic Analysis)	NW
4619	7	28.673613	I-26 WB (Basic Analysis)	NW
4619	8	36.546106	I-26 WB (Basic Analysis)	NW
4619	9	30.824689	I-26 WB (Basic Analysis)	NW
4619	10	28.407501	I-26 WB (Basic Analysis)	NW
4624	1	78.588809	I-26 EB (Weaving Analysis)	SE
4624	2	75.373242	I-26 EB (Weaving Analysis)	SE
4624	3	75.358652	I-26 EB (Weaving Analysis)	SE
4624	4	67.465632	I-26 EB (Weaving Analysis)	SE
4624	5	83.134956	I-26 EB (Weaving Analysis)	SE
4624	6	70.374815	I-26 EB (Weaving Analysis)	SE
4624	7	77.188199	I-26 EB (Weaving Analysis)	SE
4624	8	63.581857	I-26 EB (Weaving Analysis)	SE

Existing AM

ID	Run	Density	Name (Type)	Direction
4624	9	69.271836	I-26 EB (Weaving Analysis)	SE
4624	10	83.105776	I-26 EB (Weaving Analysis)	SE
4639	1	47.314223	I-26 EB (Basic Analysis)	SE
4639	2	46.767583	I-26 EB (Basic Analysis)	SE
4639	3	47.376341	I-26 EB (Basic Analysis)	SE
4639	4	43.947415	I-26 EB (Basic Analysis)	SE
4639	5	56.167316	I-26 EB (Basic Analysis)	SE
4639	6	47.177563	I-26 EB (Basic Analysis)	SE
4639	7	55.936236	I-26 EB (Basic Analysis)	SE
4639	8	40.170625	I-26 EB (Basic Analysis)	SE
4639	9	41.368265	I-26 EB (Basic Analysis)	SE
4639	10	63.904763	I-26 EB (Basic Analysis)	SE
4641	1	72.690325	I-26 EB (Basic Analysis)	SE
4641	2	70.286471	I-26 EB (Basic Analysis)	SE
4641	3	75.153631	I-26 EB (Basic Analysis)	SE
4641	4	72.416845	I-26 EB (Basic Analysis)	SE
4641	5	71.134657	I-26 EB (Basic Analysis)	SE
4641	6	74.767191	I-26 EB (Basic Analysis)	SE
4641	7	75.347842	I-26 EB (Basic Analysis)	SE
4641	8	71.802504	I-26 EB (Basic Analysis)	SE
4641	9	76.342677	I-26 EB (Basic Analysis)	SE
4641	10	74.263829	I-26 EB (Basic Analysis)	SE
4643	1	24.985681	I-26 WB (Weaving Analysis)	NW
4643	2	25.15294	I-26 WB (Weaving Analysis)	NW
4643	3	25.37358	I-26 WB (Weaving Analysis)	NW
4643	4	28.864671	I-26 WB (Weaving Analysis)	NW
4643	5	26.498131	I-26 WB (Weaving Analysis)	NW
4643	6	25.259701	I-26 WB (Weaving Analysis)	NW
4643	7	26.124467	I-26 WB (Weaving Analysis)	NW
4643	8	25.4839	I-26 WB (Weaving Analysis)	NW
4643	9	26.1992	I-26 WB (Weaving Analysis)	NW
4643	10	25.348669	I-26 WB (Weaving Analysis)	NW
4646	1	26.065835	I-26 WB (Basic Analysis)	NW
4646	2	24.936841	I-26 WB (Basic Analysis)	NW
4646	3	25.247202	I-26 WB (Basic Analysis)	NW
4646	4	26.549369	I-26 WB (Basic Analysis)	NW
4646	5	26.5921	I-26 WB (Basic Analysis)	NW
4646	6	24.950334	I-26 WB (Basic Analysis)	NW
4646	7	24.185677	I-26 WB (Basic Analysis)	NW
4646	8	25.436117	I-26 WB (Basic Analysis)	NW
4646	9	25.047041	I-26 WB (Basic Analysis)	NW
4646	10	25.726237	I-26 WB (Basic Analysis)	NW
4649	1	81.960807	I-26 EB (Basic Analysis)	SE
4649	2	74.242684	I-26 EB (Basic Analysis)	SE
4649	3	81.461944	I-26 EB (Basic Analysis)	SE
4649	4	77.140841	I-26 EB (Basic Analysis)	SE
4649	5	76.508947	I-26 EB (Basic Analysis)	SE
4649	6	81.865785	I-26 EB (Basic Analysis)	SE
4649	7	83.212715	I-26 EB (Basic Analysis)	SE
4649	8	79.226563	I-26 EB (Basic Analysis)	SE
4649	9	86.30329	I-26 EB (Basic Analysis)	SE
4649	10	71.612964	I-26 EB (Basic Analysis)	SE
4650	1	86.71441	I-26 EB (Weaving Analysis)	SE
4650	2	81.26579	I-26 EB (Weaving Analysis)	SE
4650	3	90.715213	I-26 EB (Weaving Analysis)	SE
4650	4	83.842453	I-26 EB (Weaving Analysis)	SE
4650	5	80.877048	I-26 EB (Weaving Analysis)	SE
4650	6	89.872939	I-26 EB (Weaving Analysis)	SE
4650	7	88.440076	I-26 EB (Weaving Analysis)	SE
4650	8	85.470934	I-26 EB (Weaving Analysis)	SE
4650	9	90.588126	I-26 EB (Weaving Analysis)	SE
4650	10	79.690886	I-26 EB (Weaving Analysis)	SE
4651	1	28.665885	I-26 WB (Weaving Analysis)	NW
4651	2	26.899479	I-26 WB (Weaving Analysis)	NW

Existing AM

ID	Run	Density	Name (Type)	Direction
4651	3	26.970834	I-26 WB (Weaving Analysis)	NW
4651	4	26.723275	I-26 WB (Weaving Analysis)	NW
4651	5	28.396483	I-26 WB (Weaving Analysis)	NW
4651	6	26.967921	I-26 WB (Weaving Analysis)	NW
4651	7	26.692694	I-26 WB (Weaving Analysis)	NW
4651	8	26.899479	I-26 WB (Weaving Analysis)	NW
4651	9	27.827097	I-26 WB (Weaving Analysis)	NW
4651	10	25.980598	I-26 WB (Weaving Analysis)	NW
4654	1	27.449857	I-26 WB (Basic Analysis)	NW
4654	2	29.011003	I-26 WB (Basic Analysis)	NW
4654	3	27.908796	I-26 WB (Basic Analysis)	NW
4654	4	28.395949	I-26 WB (Basic Analysis)	NW
4654	5	27.886225	I-26 WB (Basic Analysis)	NW
4654	6	29.921359	I-26 WB (Basic Analysis)	NW
4654	7	27.81287	I-26 WB (Basic Analysis)	NW
4654	8	28.531374	I-26 WB (Basic Analysis)	NW
4654	9	28.046102	I-26 WB (Basic Analysis)	NW
4654	10	29.313829	I-26 WB (Basic Analysis)	NW
4659	1	32.301759	I-26 WB (Basic Analysis)	NW
4659	2	34.973828	I-26 WB (Basic Analysis)	NW
4659	3	33.815492	I-26 WB (Basic Analysis)	NW
4659	4	36.862704	I-26 WB (Basic Analysis)	NW
4659	5	37.685386	I-26 WB (Basic Analysis)	NW
4659	6	32.387318	I-26 WB (Basic Analysis)	NW
4659	7	34.506545	I-26 WB (Basic Analysis)	NW
4659	8	36.02686	I-26 WB (Basic Analysis)	NW
4659	9	36.961426	I-26 WB (Basic Analysis)	NW
4659	10	34.236706	I-26 WB (Basic Analysis)	NW
4665	1	79.046462	I-26 EB (Basic Analysis)	SE
4665	2	72.380217	I-26 EB (Basic Analysis)	SE
4665	3	77.479121	I-26 EB (Basic Analysis)	SE
4665	4	76.268299	I-26 EB (Basic Analysis)	SE
4665	5	72.151506	I-26 EB (Basic Analysis)	SE
4665	6	76.685359	I-26 EB (Basic Analysis)	SE
4665	7	78.743756	I-26 EB (Basic Analysis)	SE
4665	8	76.127037	I-26 EB (Basic Analysis)	SE
4665	9	80.903054	I-26 EB (Basic Analysis)	SE
4665	10	71.176122	I-26 EB (Basic Analysis)	SE
4667	1	68.039503	I-26 EB (Merge Analysis)	SE
4667	2	59.151941	I-26 EB (Merge Analysis)	SE
4667	3	67.728829	I-26 EB (Merge Analysis)	SE
4667	4	65.224378	I-26 EB (Merge Analysis)	SE
4667	5	61.261855	I-26 EB (Merge Analysis)	SE
4667	6	64.684987	I-26 EB (Merge Analysis)	SE
4667	7	66.819679	I-26 EB (Merge Analysis)	SE
4667	8	62.807601	I-26 EB (Merge Analysis)	SE
4667	9	68.380673	I-26 EB (Merge Analysis)	SE
4667	10	60.878755	I-26 EB (Merge Analysis)	SE
4668	1	68.039503	I-26 EB (Merge Analysis)	SE
4668	2	59.151941	I-26 EB (Merge Analysis)	SE
4668	3	67.728829	I-26 EB (Merge Analysis)	SE
4668	4	65.224378	I-26 EB (Merge Analysis)	SE
4668	5	61.261855	I-26 EB (Merge Analysis)	SE
4668	6	64.684987	I-26 EB (Merge Analysis)	SE
4668	7	66.819679	I-26 EB (Merge Analysis)	SE
4668	8	62.807601	I-26 EB (Merge Analysis)	SE
4668	9	68.380673	I-26 EB (Merge Analysis)	SE
4668	10	60.878755	I-26 EB (Merge Analysis)	SE
4669	1	64.105087	I-26 EB (Basic Analysis)	SE
4669	2	54.182472	I-26 EB (Basic Analysis)	SE
4669	3	66.186132	I-26 EB (Basic Analysis)	SE
4669	4	62.700039	I-26 EB (Basic Analysis)	SE
4669	5	55.493393	I-26 EB (Basic Analysis)	SE
4669	6	61.010901	I-26 EB (Basic Analysis)	SE

Existing AM

ID	Run	Density	Name (Type)	Direction
4669	7	65.188394	I-26 EB (Basic Analysis)	SE
4669	8	57.004547	I-26 EB (Basic Analysis)	SE
4669	9	66.43086	I-26 EB (Basic Analysis)	SE
4669	10	57.105519	I-26 EB (Basic Analysis)	SE
4670	1	57.271722	I-26 EB (Diverge Analysis)	SE
4670	2	53.620238	I-26 EB (Diverge Analysis)	SE
4670	3	57.789791	I-26 EB (Diverge Analysis)	SE
4670	4	57.00587	I-26 EB (Diverge Analysis)	SE
4670	5	51.586586	I-26 EB (Diverge Analysis)	SE
4670	6	56.678668	I-26 EB (Diverge Analysis)	SE
4670	7	58.360123	I-26 EB (Diverge Analysis)	SE
4670	8	56.287843	I-26 EB (Diverge Analysis)	SE
4670	9	60.098384	I-26 EB (Diverge Analysis)	SE
4670	10	53.961073	I-26 EB (Diverge Analysis)	SE
4675	1	24.012261	I-26 WB (Merge Analysis)	NW
4675	2	23.986839	I-26 WB (Merge Analysis)	NW
4675	3	23.226128	I-26 WB (Merge Analysis)	NW
4675	4	24.454217	I-26 WB (Merge Analysis)	NW
4675	5	23.194839	I-26 WB (Merge Analysis)	NW
4675	6	22.971906	I-26 WB (Merge Analysis)	NW
4675	7	23.079461	I-26 WB (Merge Analysis)	NW
4675	8	23.556617	I-26 WB (Merge Analysis)	NW
4675	9	23.220261	I-26 WB (Merge Analysis)	NW
4675	10	22.774395	I-26 WB (Merge Analysis)	NW
4676	1	33.762377	I-26 WB (Basic Analysis)	NW
4676	2	33.803873	I-26 WB (Basic Analysis)	NW
4676	3	32.810447	I-26 WB (Basic Analysis)	NW
4676	4	33.686023	I-26 WB (Basic Analysis)	NW
4676	5	34.608075	I-26 WB (Basic Analysis)	NW
4676	6	34.08273	I-26 WB (Basic Analysis)	NW
4676	7	33.091793	I-26 WB (Basic Analysis)	NW
4676	8	33.664445	I-26 WB (Basic Analysis)	NW
4676	9	33.60552	I-26 WB (Basic Analysis)	NW
4676	10	33.414636	I-26 WB (Basic Analysis)	NW
4677	1	33.762377	I-26 WB (Basic Analysis)	NW
4677	2	33.803873	I-26 WB (Basic Analysis)	NW
4677	3	32.810447	I-26 WB (Basic Analysis)	NW
4677	4	33.686023	I-26 WB (Basic Analysis)	NW
4677	5	34.608075	I-26 WB (Basic Analysis)	NW
4677	6	34.08273	I-26 WB (Basic Analysis)	NW
4677	7	33.091793	I-26 WB (Basic Analysis)	NW
4677	8	33.664445	I-26 WB (Basic Analysis)	NW
4677	9	33.60552	I-26 WB (Basic Analysis)	NW
4677	10	33.414636	I-26 WB (Basic Analysis)	NW
4687	1	78.491778	I-26 EB (Basic Analysis)	SE
4687	2	72.442701	I-26 EB (Basic Analysis)	SE
4687	3	75.387929	I-26 EB (Basic Analysis)	SE
4687	4	81.42544	I-26 EB (Basic Analysis)	SE
4687	5	77.173241	I-26 EB (Basic Analysis)	SE
4687	6	73.244067	I-26 EB (Basic Analysis)	SE
4687	7	75.652297	I-26 EB (Basic Analysis)	SE
4687	8	76.061242	I-26 EB (Basic Analysis)	SE
4687	9	75.272268	I-26 EB (Basic Analysis)	SE
4687	10	72.77977	I-26 EB (Basic Analysis)	SE
4689	1	24.593683	I-26 WB (Basic Analysis)	NW
4689	2	24.590913	I-26 WB (Basic Analysis)	NW
4689	3	23.303702	I-26 WB (Basic Analysis)	NW
4689	4	24.202164	I-26 WB (Basic Analysis)	NW
4689	5	24.59276	I-26 WB (Basic Analysis)	NW
4689	6	24.311125	I-26 WB (Basic Analysis)	NW
4689	7	23.818956	I-26 WB (Basic Analysis)	NW
4689	8	23.610268	I-26 WB (Basic Analysis)	NW
4689	9	23.658285	I-26 WB (Basic Analysis)	NW
4689	10	24.246487	I-26 WB (Basic Analysis)	NW

Existing AM

ID	Run	Density	Name (Type)	Direction
4700	1	18.346976	I-26 WB (Merge Analysis)	NW
4700	2	19.470348	I-26 WB (Merge Analysis)	NW
4700	3	18.197193	I-26 WB (Merge Analysis)	NW
4700	4	18.238959	I-26 WB (Merge Analysis)	NW
4700	5	18.673906	I-26 WB (Merge Analysis)	NW
4700	6	19.301842	I-26 WB (Merge Analysis)	NW
4700	7	18.126622	I-26 WB (Merge Analysis)	NW
4700	8	18.159747	I-26 WB (Merge Analysis)	NW
4700	9	18.753118	I-26 WB (Merge Analysis)	NW
4700	10	18.76464	I-26 WB (Merge Analysis)	NW
4701	1	25.105502	I-26 WB (Basic Analysis)	NW
4701	2	28.926206	I-26 WB (Basic Analysis)	NW
4701	3	26.404541	I-26 WB (Basic Analysis)	NW
4701	4	24.612283	I-26 WB (Basic Analysis)	NW
4701	5	28.523295	I-26 WB (Basic Analysis)	NW
4701	6	25.93911	I-26 WB (Basic Analysis)	NW
4701	7	25.029088	I-26 WB (Basic Analysis)	NW
4701	8	27.932823	I-26 WB (Basic Analysis)	NW
4701	9	29.252703	I-26 WB (Basic Analysis)	NW
4701	10	27.849462	I-26 WB (Basic Analysis)	NW
4702	1	17.144456	I-26 WB (Diverge Analysis)	NW
4702	2	19.448826	I-26 WB (Diverge Analysis)	NW
4702	3	17.072442	I-26 WB (Diverge Analysis)	NW
4702	4	17.999159	I-26 WB (Diverge Analysis)	NW
4702	5	18.854684	I-26 WB (Diverge Analysis)	NW
4702	6	18.209963	I-26 WB (Diverge Analysis)	NW
4702	7	17.770771	I-26 WB (Diverge Analysis)	NW
4702	8	17.869157	I-26 WB (Diverge Analysis)	NW
4702	9	18.916654	I-26 WB (Diverge Analysis)	NW
4702	10	17.624035	I-26 WB (Diverge Analysis)	NW
4703	1	17.144456	I-26 WB (Diverge Analysis)	NW
4703	2	19.448826	I-26 WB (Diverge Analysis)	NW
4703	3	17.072442	I-26 WB (Diverge Analysis)	NW
4703	4	17.999159	I-26 WB (Diverge Analysis)	NW
4703	5	18.854684	I-26 WB (Diverge Analysis)	NW
4703	6	18.209963	I-26 WB (Diverge Analysis)	NW
4703	7	17.770771	I-26 WB (Diverge Analysis)	NW
4703	8	17.869157	I-26 WB (Diverge Analysis)	NW
4703	9	18.916654	I-26 WB (Diverge Analysis)	NW
4703	10	17.624035	I-26 WB (Diverge Analysis)	NW
4705	1	63.529746	I-26 EB (Merge Analysis)	SE
4705	2	57.557211	I-26 EB (Merge Analysis)	SE
4705	3	63.531999	I-26 EB (Merge Analysis)	SE
4705	4	65.864669	I-26 EB (Merge Analysis)	SE
4705	5	67.271032	I-26 EB (Merge Analysis)	SE
4705	6	60.563762	I-26 EB (Merge Analysis)	SE
4705	7	60.982967	I-26 EB (Merge Analysis)	SE
4705	8	58.33026	I-26 EB (Merge Analysis)	SE
4705	9	62.758951	I-26 EB (Merge Analysis)	SE
4705	10	62.380315	I-26 EB (Merge Analysis)	SE
4706	1	63.529746	I-26 EB (Merge Analysis)	SE
4706	2	57.557211	I-26 EB (Merge Analysis)	SE
4706	3	63.531999	I-26 EB (Merge Analysis)	SE
4706	4	65.864669	I-26 EB (Merge Analysis)	SE
4706	5	67.271032	I-26 EB (Merge Analysis)	SE
4706	6	60.563762	I-26 EB (Merge Analysis)	SE
4706	7	60.982967	I-26 EB (Merge Analysis)	SE
4706	8	58.33026	I-26 EB (Merge Analysis)	SE
4706	9	62.758951	I-26 EB (Merge Analysis)	SE
4706	10	62.380315	I-26 EB (Merge Analysis)	SE
4707	1	65.457314	I-26 EB (Diverge Analysis)	SE
4707	2	59.963182	I-26 EB (Diverge Analysis)	SE
4707	3	64.113847	I-26 EB (Diverge Analysis)	SE
4707	4	69.393846	I-26 EB (Diverge Analysis)	SE

Existing AM

ID	Run	Density	Name (Type)	Direction
4707	5	67.545846	I-26 EB (Diverge Analysis)	SE
4707	6	60.828515	I-26 EB (Diverge Analysis)	SE
4707	7	61.555981	I-26 EB (Diverge Analysis)	SE
4707	8	59.910382	I-26 EB (Diverge Analysis)	SE
4707	9	63.999447	I-26 EB (Diverge Analysis)	SE
4707	10	62.870115	I-26 EB (Diverge Analysis)	SE
4712	1	24.353938	I-26 WB (Basic Analysis)	NW
4712	2	21.314587	I-26 WB (Basic Analysis)	NW
4712	3	21.160663	I-26 WB (Basic Analysis)	NW
4712	4	22.33727	I-26 WB (Basic Analysis)	NW
4712	5	22.624247	I-26 WB (Basic Analysis)	NW
4712	6	22.245959	I-26 WB (Basic Analysis)	NW
4712	7	22.715558	I-26 WB (Basic Analysis)	NW
4712	8	22.094644	I-26 WB (Basic Analysis)	NW
4712	9	22.295528	I-26 WB (Basic Analysis)	NW
4712	10	23.967823	I-26 WB (Basic Analysis)	NW
4714	1	67.1668	I-26 EB (Basic Analysis)	SE
4714	2	53.63737	I-26 EB (Basic Analysis)	SE
4714	3	67.695956	I-26 EB (Basic Analysis)	SE
4714	4	64.338643	I-26 EB (Basic Analysis)	SE
4714	5	65.84648	I-26 EB (Basic Analysis)	SE
4714	6	63.971317	I-26 EB (Basic Analysis)	SE
4714	7	55.846467	I-26 EB (Basic Analysis)	SE
4714	8	58.637377	I-26 EB (Basic Analysis)	SE
4714	9	68.868575	I-26 EB (Basic Analysis)	SE
4714	10	64.414421	I-26 EB (Basic Analysis)	SE
4718	1	49.171496	I-26 EB (Merge Analysis)	SE
4718	2	35.597533	I-26 EB (Merge Analysis)	SE
4718	3	48.362597	I-26 EB (Merge Analysis)	SE
4718	4	43.250196	I-26 EB (Merge Analysis)	SE
4718	5	41.831634	I-26 EB (Merge Analysis)	SE
4718	6	43.851889	I-26 EB (Merge Analysis)	SE
4718	7	33.69682	I-26 EB (Merge Analysis)	SE
4718	8	47.173157	I-26 EB (Merge Analysis)	SE
4718	9	53.797761	I-26 EB (Merge Analysis)	SE
4718	10	45.814366	I-26 EB (Merge Analysis)	SE
4719	1	49.171496	I-26 EB (Merge Analysis)	SE
4719	2	35.597533	I-26 EB (Merge Analysis)	SE
4719	3	48.362597	I-26 EB (Merge Analysis)	SE
4719	4	43.250196	I-26 EB (Merge Analysis)	SE
4719	5	41.831634	I-26 EB (Merge Analysis)	SE
4719	6	43.851889	I-26 EB (Merge Analysis)	SE
4719	7	33.69682	I-26 EB (Merge Analysis)	SE
4719	8	47.173157	I-26 EB (Merge Analysis)	SE
4719	9	53.797761	I-26 EB (Merge Analysis)	SE
4719	10	45.814366	I-26 EB (Merge Analysis)	SE
4720	1	55.27865	I-26 EB (Diverge Analysis)	SE
4720	2	38.587988	I-26 EB (Diverge Analysis)	SE
4720	3	53.794384	I-26 EB (Diverge Analysis)	SE
4720	4	50.954918	I-26 EB (Diverge Analysis)	SE
4720	5	48.270919	I-26 EB (Diverge Analysis)	SE
4720	6	50.916785	I-26 EB (Diverge Analysis)	SE
4720	7	38.274122	I-26 EB (Diverge Analysis)	SE
4720	8	46.771986	I-26 EB (Diverge Analysis)	SE
4720	9	55.777316	I-26 EB (Diverge Analysis)	SE
4720	10	49.411985	I-26 EB (Diverge Analysis)	SE
4725	1	20.267334	I-26 WB (Merge Analysis)	NW
4725	2	20.749221	I-26 WB (Merge Analysis)	NW
4725	3	21.252161	I-26 WB (Merge Analysis)	NW
4725	4	18.395927	I-26 WB (Merge Analysis)	NW
4725	5	18.962027	I-26 WB (Merge Analysis)	NW
4725	6	20.21587	I-26 WB (Merge Analysis)	NW
4725	7	19.542164	I-26 WB (Merge Analysis)	NW
4725	8	19.291863	I-26 WB (Merge Analysis)	NW

Existing AM

ID	Run	Density	Name (Type)	Direction
4725	9	20.131657	I-26 WB (Merge Analysis)	NW
4725	10	19.380755	I-26 WB (Merge Analysis)	NW
4726	1		I-26 WB (Basic Analysis)	NW
4726	2		I-26 WB (Basic Analysis)	NW
4726	3		I-26 WB (Basic Analysis)	NW
4726	4		I-26 WB (Basic Analysis)	NW
4726	5		I-26 WB (Basic Analysis)	NW
4726	6		I-26 WB (Basic Analysis)	NW
4726	7		I-26 WB (Basic Analysis)	NW
4726	8		I-26 WB (Basic Analysis)	NW
4726	9		I-26 WB (Basic Analysis)	NW
4726	10		I-26 WB (Basic Analysis)	NW
4727	1	21.887568	I-26 WB (Diverge Analysis)	NW
4727	2	21.506779	I-26 WB (Diverge Analysis)	NW
4727	3	21.404941	I-26 WB (Diverge Analysis)	NW
4727	4	21.486629	I-26 WB (Diverge Analysis)	NW
4727	5	22.917942	I-26 WB (Diverge Analysis)	NW
4727	6	22.636909	I-26 WB (Diverge Analysis)	NW
4727	7	20.825021	I-26 WB (Diverge Analysis)	NW
4727	8	22.344272	I-26 WB (Diverge Analysis)	NW
4727	9	21.973984	I-26 WB (Diverge Analysis)	NW
4727	10	23.487662	I-26 WB (Diverge Analysis)	NW
4728	1	20.956092	I-26 WB (Basic Analysis)	NW
4728	2	25.230477	I-26 WB (Basic Analysis)	NW
4728	3	21.149503	I-26 WB (Basic Analysis)	NW
4728	4	22.928885	I-26 WB (Basic Analysis)	NW
4728	5	23.963634	I-26 WB (Basic Analysis)	NW
4728	6	24.950031	I-26 WB (Basic Analysis)	NW
4728	7	19.36045	I-26 WB (Basic Analysis)	NW
4728	8	19.553861	I-26 WB (Basic Analysis)	NW
4728	9	23.499448	I-26 WB (Basic Analysis)	NW
4728	10	21.826442	I-26 WB (Basic Analysis)	NW
4729	1	15.604653	I-26 WB (Diverge Analysis)	NW
4729	2	15.862708	I-26 WB (Diverge Analysis)	NW
4729	3	15.040018	I-26 WB (Diverge Analysis)	NW
4729	4	17.415454	I-26 WB (Diverge Analysis)	NW
4729	5	16.319269	I-26 WB (Diverge Analysis)	NW
4729	6	16.023718	I-26 WB (Diverge Analysis)	NW
4729	7	16.257512	I-26 WB (Diverge Analysis)	NW
4729	8	15.037812	I-26 WB (Diverge Analysis)	NW
4729	9	17.785996	I-26 WB (Diverge Analysis)	NW
4729	10	15.309102	I-26 WB (Diverge Analysis)	NW
4730	1	15.604653	I-26 WB (Diverge Analysis)	NW
4730	2	15.862708	I-26 WB (Diverge Analysis)	NW
4730	3	15.040018	I-26 WB (Diverge Analysis)	NW
4730	4	17.415454	I-26 WB (Diverge Analysis)	NW
4730	5	16.319269	I-26 WB (Diverge Analysis)	NW
4730	6	16.023718	I-26 WB (Diverge Analysis)	NW
4730	7	16.257512	I-26 WB (Diverge Analysis)	NW
4730	8	15.037812	I-26 WB (Diverge Analysis)	NW
4730	9	17.785996	I-26 WB (Diverge Analysis)	NW
4730	10	15.309102	I-26 WB (Diverge Analysis)	NW
4732	1	18.929821	I-26 WB (Basic Analysis)	NW
4732	2	17.312308	I-26 WB (Basic Analysis)	NW
4732	3	17.245755	I-26 WB (Basic Analysis)	NW
4732	4	16.933248	I-26 WB (Basic Analysis)	NW
4732	5	16.901419	I-26 WB (Basic Analysis)	NW
4732	6	18.290339	I-26 WB (Basic Analysis)	NW
4732	7	18.168808	I-26 WB (Basic Analysis)	NW
4732	8	17.190777	I-26 WB (Basic Analysis)	NW
4732	9	16.967971	I-26 WB (Basic Analysis)	NW
4732	10	18.359785	I-26 WB (Basic Analysis)	NW
4733	1	29.67477	I-26 EB (Basic Analysis)	SE
4733	2	26.512822	I-26 EB (Basic Analysis)	SE

Existing AM

ID	Run	Density	Name (Type)	Direction
4733	3	29.355198	I-26 EB (Basic Analysis)	SE
4733	4	27.475436	I-26 EB (Basic Analysis)	SE
4733	5	27.722261	I-26 EB (Basic Analysis)	SE
4733	6	26.438774	I-26 EB (Basic Analysis)	SE
4733	7	27.471539	I-26 EB (Basic Analysis)	SE
4733	8	30.6153	I-26 EB (Basic Analysis)	SE
4733	9	37.496501	I-26 EB (Basic Analysis)	SE
4733	10	29.035625	I-26 EB (Basic Analysis)	SE
4736	1	30.606956	I-26 EB (Basic Analysis)	SE
4736	2	30.536606	I-26 EB (Basic Analysis)	SE
4736	3	30.436107	I-26 EB (Basic Analysis)	SE
4736	4	30.059236	I-26 EB (Basic Analysis)	SE
4736	5	28.908523	I-26 EB (Basic Analysis)	SE
4736	6	30.149685	I-26 EB (Basic Analysis)	SE
4736	7	30.767754	I-26 EB (Basic Analysis)	SE
4736	8	30.777804	I-26 EB (Basic Analysis)	SE
4736	9	30.375808	I-26 EB (Basic Analysis)	SE
4736	10	30.742629	I-26 EB (Basic Analysis)	SE
4737	1	23.747727	I-26 EB (Diverge Analysis)	SE
4737	2	25.190577	I-26 EB (Diverge Analysis)	SE
4737	3	24.323384	I-26 EB (Diverge Analysis)	SE
4737	4	25.185635	I-26 EB (Diverge Analysis)	SE
4737	5	24.185029	I-26 EB (Diverge Analysis)	SE
4737	6	24.175146	I-26 EB (Diverge Analysis)	SE
4737	7	25.294343	I-26 EB (Diverge Analysis)	SE
4737	8	24.46174	I-26 EB (Diverge Analysis)	SE
4737	9	24.73598	I-26 EB (Diverge Analysis)	SE
4737	10	24.97069	I-26 EB (Diverge Analysis)	SE
4739	1	14.847262	I-26 WB (Weaving Analysis)	NW
4739	2	16.080988	I-26 WB (Weaving Analysis)	NW
4739	3	16.591496	I-26 WB (Weaving Analysis)	NW
4739	4	13.258307	I-26 WB (Weaving Analysis)	NW
4739	5	16.006539	I-26 WB (Weaving Analysis)	NW
4739	6	14.998287	I-26 WB (Weaving Analysis)	NW
4739	7	15.240778	I-26 WB (Weaving Analysis)	NW
4739	8	15.489651	I-26 WB (Weaving Analysis)	NW
4739	9	15.02594	I-26 WB (Weaving Analysis)	NW
4739	10	15.355642	I-26 WB (Weaving Analysis)	NW
4741	1	18.115412	I-26 WB (Basic Analysis)	NW
4741	2	18.729768	I-26 WB (Basic Analysis)	NW
4741	3	19.327956	I-26 WB (Basic Analysis)	NW
4741	4	19.376458	I-26 WB (Basic Analysis)	NW
4741	5	20.306075	I-26 WB (Basic Analysis)	NW
4741	6	21.179107	I-26 WB (Basic Analysis)	NW
4741	7	17.169627	I-26 WB (Basic Analysis)	NW
4741	8	17.589976	I-26 WB (Basic Analysis)	NW
4741	9	18.551928	I-26 WB (Basic Analysis)	NW
4741	10	18.681266	I-26 WB (Basic Analysis)	NW
4742	1	13.417991	I-26 WB (Diverge Analysis)	NW
4742	2	13.510226	I-26 WB (Diverge Analysis)	NW
4742	3	12.539445	I-26 WB (Diverge Analysis)	NW
4742	4	12.61554	I-26 WB (Diverge Analysis)	NW
4742	5	13.489473	I-26 WB (Diverge Analysis)	NW
4742	6	14.029052	I-26 WB (Diverge Analysis)	NW
4742	7	12.00909	I-26 WB (Diverge Analysis)	NW
4742	8	12.331915	I-26 WB (Diverge Analysis)	NW
4742	9	13.383402	I-26 WB (Diverge Analysis)	NW
4742	10	13.337284	I-26 WB (Diverge Analysis)	NW
4745	1	24.419118	I-26 EB (Basic Analysis)	SE
4745	2	24.271939	I-26 EB (Basic Analysis)	SE
4745	3	22.518322	I-26 EB (Basic Analysis)	SE
4745	4	24.300122	I-26 EB (Basic Analysis)	SE
4745	5	23.207243	I-26 EB (Basic Analysis)	SE
4745	6	23.366948	I-26 EB (Basic Analysis)	SE

Existing AM

ID	Run	Density	Name (Type)	Direction
4745	7	24.550639	I-26 EB (Basic Analysis)	SE
4745	8	24.860654	I-26 EB (Basic Analysis)	SE
4745	9	24.481747	I-26 EB (Basic Analysis)	SE
4745	10	23.642516	I-26 EB (Basic Analysis)	SE
4748	1	26.213736	I-26 EB (Weaving Analysis)	SE
4748	2	26.433486	I-26 EB (Weaving Analysis)	SE
4748	3	25.672289	I-26 EB (Weaving Analysis)	SE
4748	4	25.307549	I-26 EB (Weaving Analysis)	SE
4748	5	27.011181	I-26 EB (Weaving Analysis)	SE
4748	6	26.014375	I-26 EB (Weaving Analysis)	SE
4748	7	25.549954	I-26 EB (Weaving Analysis)	SE
4748	8	25.799155	I-26 EB (Weaving Analysis)	SE
4748	9	24.818207	I-26 EB (Weaving Analysis)	SE
4748	10	25.441211	I-26 EB (Weaving Analysis)	SE
4753	1	15.108537	I-26 WB (Basic Analysis)	NW
4753	2	16.687947	I-26 WB (Basic Analysis)	NW
4753	3	13.716337	I-26 WB (Basic Analysis)	NW
4753	4	16.977988	I-26 WB (Basic Analysis)	NW
4753	5	15.849462	I-26 WB (Basic Analysis)	NW
4753	6	14.61283	I-26 WB (Basic Analysis)	NW
4753	7	16.498101	I-26 WB (Basic Analysis)	NW
4753	8	15.190277	I-26 WB (Basic Analysis)	NW
4753	9	16.964805	I-26 WB (Basic Analysis)	NW
4753	10	15.105901	I-26 WB (Basic Analysis)	NW
4755	1	25.973501	I-26 EB (Basic Analysis)	SE
4755	2	25.245975	I-26 EB (Basic Analysis)	SE
4755	3	25.521933	I-26 EB (Basic Analysis)	SE
4755	4	26.646671	I-26 EB (Basic Analysis)	SE
4755	5	24.995104	I-26 EB (Basic Analysis)	SE
4755	6	24.781864	I-26 EB (Basic Analysis)	SE
4755	7	26.780469	I-26 EB (Basic Analysis)	SE
4755	8	27.077333	I-26 EB (Basic Analysis)	SE
4755	9	25.559564	I-26 EB (Basic Analysis)	SE
4755	10	26.082211	I-26 EB (Basic Analysis)	SE
4756	1	22.443535	I-26 EB (Diverge Analysis)	SE
4756	2	22.89994	I-26 EB (Diverge Analysis)	SE
4756	3	22.771953	I-26 EB (Diverge Analysis)	SE
4756	4	21.743231	I-26 EB (Diverge Analysis)	SE
4756	5	22.851643	I-26 EB (Diverge Analysis)	SE
4756	6	22.636722	I-26 EB (Diverge Analysis)	SE
4756	7	22.991704	I-26 EB (Diverge Analysis)	SE
4756	8	22.694678	I-26 EB (Diverge Analysis)	SE
4756	9	22.460439	I-26 EB (Diverge Analysis)	SE
4756	10	22.557032	I-26 EB (Diverge Analysis)	SE
4760	1	19.017707	I-26 WB (Merge Analysis)	NW
4760	2	18.669092	I-26 WB (Merge Analysis)	NW
4760	3	19.434762	I-26 WB (Merge Analysis)	NW
4760	4	18.256315	I-26 WB (Merge Analysis)	NW
4760	5	18.731116	I-26 WB (Merge Analysis)	NW
4760	6	19.682856	I-26 WB (Merge Analysis)	NW
4760	7	20.395058	I-26 WB (Merge Analysis)	NW
4760	8	18.874411	I-26 WB (Merge Analysis)	NW
4760	9	17.757987	I-26 WB (Merge Analysis)	NW
4760	10	19.719215	I-26 WB (Merge Analysis)	NW
4761	1	19.017707	I-26 WB (Merge Analysis)	NW
4761	2	18.669092	I-26 WB (Merge Analysis)	NW
4761	3	19.434762	I-26 WB (Merge Analysis)	NW
4761	4	18.256315	I-26 WB (Merge Analysis)	NW
4761	5	18.731116	I-26 WB (Merge Analysis)	NW
4761	6	19.682856	I-26 WB (Merge Analysis)	NW
4761	7	20.395058	I-26 WB (Merge Analysis)	NW
4761	8	18.874411	I-26 WB (Merge Analysis)	NW
4761	9	17.757987	I-26 WB (Merge Analysis)	NW
4761	10	19.719215	I-26 WB (Merge Analysis)	NW

Existing AM

ID	Run	Density	Name (Type)	Direction
4764	1	23.598368	I-26 WB (Basic Analysis)	NW
4764	2	23.700192	I-26 WB (Basic Analysis)	NW
4764	3	22.94908	I-26 WB (Basic Analysis)	NW
4764	4	24.087771	I-26 WB (Basic Analysis)	NW
4764	5	23.261051	I-26 WB (Basic Analysis)	NW
4764	6	23.895173	I-26 WB (Basic Analysis)	NW
4764	7	22.994576	I-26 WB (Basic Analysis)	NW
4764	8	22.733735	I-26 WB (Basic Analysis)	NW
4764	9	23.548973	I-26 WB (Basic Analysis)	NW
4764	10	23.633681	I-26 WB (Basic Analysis)	NW
4768	1	50.28308	I-26 EB (Basic Analysis)	SE
4768	2	50.020927	I-26 EB (Basic Analysis)	SE
4768	3	49.949312	I-26 EB (Basic Analysis)	SE
4768	4	52.730567	I-26 EB (Basic Analysis)	SE
4768	5	51.27961	I-26 EB (Basic Analysis)	SE
4768	6	48.492061	I-26 EB (Basic Analysis)	SE
4768	7	50.893324	I-26 EB (Basic Analysis)	SE
4768	8	49.071055	I-26 EB (Basic Analysis)	SE
4768	9	47.405688	I-26 EB (Basic Analysis)	SE
4768	10	50.279174	I-26 EB (Basic Analysis)	SE
4769	1	42.858321	I-26 EB (Diverge Analysis)	SE
4769	2	39.240563	I-26 EB (Diverge Analysis)	SE
4769	3	41.569055	I-26 EB (Diverge Analysis)	SE
4769	4	40.907493	I-26 EB (Diverge Analysis)	SE
4769	5	42.946877	I-26 EB (Diverge Analysis)	SE
4769	6	39.795338	I-26 EB (Diverge Analysis)	SE
4769	7	42.037879	I-26 EB (Diverge Analysis)	SE
4769	8	42.269687	I-26 EB (Diverge Analysis)	SE
4769	9	38.469608	I-26 EB (Diverge Analysis)	SE
4769	10	42.261873	I-26 EB (Diverge Analysis)	SE
6149	1	15.569621	I-26 EB (Merge Analysis)	S
6149	2	15.472117	I-26 EB (Merge Analysis)	S
6149	3	15.058464	I-26 EB (Merge Analysis)	S
6149	4	14.962437	I-26 EB (Merge Analysis)	S
6149	5	15.723264	I-26 EB (Merge Analysis)	S
6149	6	14.4956	I-26 EB (Merge Analysis)	S
6149	7	16.269878	I-26 EB (Merge Analysis)	S
6149	8	14.770384	I-26 EB (Merge Analysis)	S
6149	9	15.023008	I-26 EB (Merge Analysis)	S
6149	10	14.828	I-26 EB (Merge Analysis)	S
6150	1	15.569621	I-26 EB (Merge Analysis)	S
6150	2	15.472117	I-26 EB (Merge Analysis)	S
6150	3	15.058464	I-26 EB (Merge Analysis)	S
6150	4	14.962437	I-26 EB (Merge Analysis)	S
6150	5	15.723264	I-26 EB (Merge Analysis)	S
6150	6	14.4956	I-26 EB (Merge Analysis)	S
6150	7	16.269878	I-26 EB (Merge Analysis)	S
6150	8	14.770384	I-26 EB (Merge Analysis)	S
6150	9	15.023008	I-26 EB (Merge Analysis)	S
6150	10	14.828	I-26 EB (Merge Analysis)	S
6151	1	19.283785	I-26 EB (Basic Analysis)	S
6151	2	20.000932	I-26 EB (Basic Analysis)	S
6151	3	19.711558	I-26 EB (Basic Analysis)	S
6151	4	19.78666	I-26 EB (Basic Analysis)	S
6151	5	20.155199	I-26 EB (Basic Analysis)	S
6151	6	18.993239	I-26 EB (Basic Analysis)	S
6151	7	21.051255	I-26 EB (Basic Analysis)	S
6151	8	18.937773	I-26 EB (Basic Analysis)	S
6151	9	19.589701	I-26 EB (Basic Analysis)	S
6151	10	19.781365	I-26 EB (Basic Analysis)	S
6152	1	19.283785	I-26 EB (Basic Analysis)	S
6152	2	20.000932	I-26 EB (Basic Analysis)	S
6152	3	19.711558	I-26 EB (Basic Analysis)	S
6152	4	19.78666	I-26 EB (Basic Analysis)	S

Existing AM

ID	Run	Density	Name (Type)	Direction
6152	5	20.155199	I-26 EB (Basic Analysis)	S
6152	6	18.993239	I-26 EB (Basic Analysis)	S
6152	7	21.051255	I-26 EB (Basic Analysis)	S
6152	8	18.937773	I-26 EB (Basic Analysis)	S
6152	9	19.589701	I-26 EB (Basic Analysis)	S
6152	10	19.781365	I-26 EB (Basic Analysis)	S
6159	1	23.361453	I-26 WB (Diverge Analysis)	N
6159	2	23.256918	I-26 WB (Diverge Analysis)	N
6159	3	22.286835	I-26 WB (Diverge Analysis)	N
6159	4	22.408095	I-26 WB (Diverge Analysis)	N
6159	5	23.340546	I-26 WB (Diverge Analysis)	N
6159	6	23.0813	I-26 WB (Diverge Analysis)	N
6159	7	21.199672	I-26 WB (Diverge Analysis)	N
6159	8	22.615074	I-26 WB (Diverge Analysis)	N
6159	9	22.548172	I-26 WB (Diverge Analysis)	N
6159	10	22.270109	I-26 WB (Diverge Analysis)	N
6160	1	23.361453	I-26 WB (Diverge Analysis)	N
6160	2	23.256918	I-26 WB (Diverge Analysis)	N
6160	3	22.286835	I-26 WB (Diverge Analysis)	N
6160	4	22.408095	I-26 WB (Diverge Analysis)	N
6160	5	23.340546	I-26 WB (Diverge Analysis)	N
6160	6	23.0813	I-26 WB (Diverge Analysis)	N
6160	7	21.199672	I-26 WB (Diverge Analysis)	N
6160	8	22.615074	I-26 WB (Diverge Analysis)	N
6160	9	22.548172	I-26 WB (Diverge Analysis)	N
6160	10	22.270109	I-26 WB (Diverge Analysis)	N
6165	1	16.285886	I-26 WB (Basic Analysis)	N
6165	2	15.36372	I-26 WB (Basic Analysis)	N
6165	3	16.459578	I-26 WB (Basic Analysis)	N
6165	4	16.499573	I-26 WB (Basic Analysis)	N
6165	5	15.139749	I-26 WB (Basic Analysis)	N
6165	6	16.424154	I-26 WB (Basic Analysis)	N
6165	7	15.212882	I-26 WB (Basic Analysis)	N
6165	8	15.850514	I-26 WB (Basic Analysis)	N
6165	9	16.367018	I-26 WB (Basic Analysis)	N
6165	10	16.385302	I-26 WB (Basic Analysis)	N
6166	1	15.750011	I-26 EB (Basic Analysis)	S
6166	2	15.532116	I-26 EB (Basic Analysis)	S
6166	3	15.718421	I-26 EB (Basic Analysis)	S
6166	4	16.483889	I-26 EB (Basic Analysis)	S
6166	5	15.453544	I-26 EB (Basic Analysis)	S
6166	6	15.6844	I-26 EB (Basic Analysis)	S
6166	7	16.168791	I-26 EB (Basic Analysis)	S
6166	8	15.24618	I-26 EB (Basic Analysis)	S
6166	9	16.186612	I-26 EB (Basic Analysis)	S
6166	10	15.617978	I-26 EB (Basic Analysis)	S
6174	1	16.036653	I-26 WB (Basic Analysis)	N
6174	2	15.341654	I-26 WB (Basic Analysis)	N
6174	3	15.673861	I-26 WB (Basic Analysis)	N
6174	4	16.442157	I-26 WB (Basic Analysis)	N
6174	5	15.530959	I-26 WB (Basic Analysis)	N
6174	6	15.375402	I-26 WB (Basic Analysis)	N
6174	7	15.090653	I-26 WB (Basic Analysis)	N
6174	8	15.756122	I-26 WB (Basic Analysis)	N
6174	9	15.446589	I-26 WB (Basic Analysis)	N
6174	10	15.555215	I-26 WB (Basic Analysis)	N
6175	1	16.036653	I-26 WB (Basic Analysis)	N
6175	2	15.341654	I-26 WB (Basic Analysis)	N
6175	3	15.673861	I-26 WB (Basic Analysis)	N
6175	4	16.442157	I-26 WB (Basic Analysis)	N
6175	5	15.530959	I-26 WB (Basic Analysis)	N
6175	6	15.375402	I-26 WB (Basic Analysis)	N
6175	7	15.090653	I-26 WB (Basic Analysis)	N
6175	8	15.756122	I-26 WB (Basic Analysis)	N

Existing AM

ID	Run	Density	Name (Type)	Direction
6175	9	15.446589	I-26 WB (Basic Analysis)	N
6175	10	15.555215	I-26 WB (Basic Analysis)	N
6177	1	26.171807	I-26 EB (Basic Analysis)	S
6177	2	25.400858	I-26 EB (Basic Analysis)	S
6177	3	26.389831	I-26 EB (Basic Analysis)	S
6177	4	24.971554	I-26 EB (Basic Analysis)	S
6177	5	25.108662	I-26 EB (Basic Analysis)	S
6177	6	24.87041	I-26 EB (Basic Analysis)	S
6177	7	25.466041	I-26 EB (Basic Analysis)	S
6177	8	25.441316	I-26 EB (Basic Analysis)	S
6177	9	26.239237	I-26 EB (Basic Analysis)	S
6177	10	25.315447	I-26 EB (Basic Analysis)	S
6178	1	23.733695	I-26 EB (Diverge Analysis)	S
6178	2	25.195923	I-26 EB (Diverge Analysis)	S
6178	3	33.919504	I-26 EB (Diverge Analysis)	S
6178	4	34.160588	I-26 EB (Diverge Analysis)	S
6178	5	35.635919	I-26 EB (Diverge Analysis)	S
6178	6	27.596284	I-26 EB (Diverge Analysis)	S
6178	7	23.178153	I-26 EB (Diverge Analysis)	S
6178	8	28.240922	I-26 EB (Diverge Analysis)	S
6178	9	55.250218	I-26 EB (Diverge Analysis)	S
6178	10	38.819803	I-26 EB (Diverge Analysis)	S
6185	1	32.92185	I-26 EB (Merge Analysis)	S
6185	2	32.537972	I-26 EB (Merge Analysis)	S
6185	3	32.727046	I-26 EB (Merge Analysis)	S
6185	4	31.331907	I-26 EB (Merge Analysis)	S
6185	5	32.182741	I-26 EB (Merge Analysis)	S
6185	6	31.629842	I-26 EB (Merge Analysis)	S
6185	7	31.271747	I-26 EB (Merge Analysis)	S
6185	8	31.515251	I-26 EB (Merge Analysis)	S
6185	9	34.534711	I-26 EB (Merge Analysis)	S
6185	10	30.131571	I-26 EB (Merge Analysis)	S
6186	1	31.363499	I-26 EB (Basic Analysis)	S
6186	2	31.188141	I-26 EB (Basic Analysis)	S
6186	3	32.568683	I-26 EB (Basic Analysis)	S
6186	4	30.909163	I-26 EB (Basic Analysis)	S
6186	5	30.71627	I-26 EB (Basic Analysis)	S
6186	6	31.510162	I-26 EB (Basic Analysis)	S
6186	7	30.542506	I-26 EB (Basic Analysis)	S
6186	8	30.435698	I-26 EB (Basic Analysis)	S
6186	9	32.913022	I-26 EB (Basic Analysis)	S
6186	10	29.992521	I-26 EB (Basic Analysis)	S
6200	1	25.432518	I-26 WB (Weaving Analysis)	NW
6200	2	24.834721	I-26 WB (Weaving Analysis)	NW
6200	3	23.869425	I-26 WB (Weaving Analysis)	NW
6200	4	23.407194	I-26 WB (Weaving Analysis)	NW
6200	5	24.735088	I-26 WB (Weaving Analysis)	NW
6200	6	24.864121	I-26 WB (Weaving Analysis)	NW
6200	7	23.784493	I-26 WB (Weaving Analysis)	NW
6200	8	24.592989	I-26 WB (Weaving Analysis)	NW
6200	9	24.246724	I-26 WB (Weaving Analysis)	NW
6200	10	23.113196	I-26 WB (Weaving Analysis)	NW
6204	1	25.158437	I-26 WB (Basic Analysis)	NW
6204	2	26.446901	I-26 WB (Basic Analysis)	NW
6204	3	25.938193	I-26 WB (Basic Analysis)	NW
6204	4	26.258345	I-26 WB (Basic Analysis)	NW
6204	5	24.639908	I-26 WB (Basic Analysis)	NW
6204	6	26.142462	I-26 WB (Basic Analysis)	NW
6204	7	26.124785	I-26 WB (Basic Analysis)	NW
6204	8	25.209504	I-26 WB (Basic Analysis)	NW
6204	9	27.191303	I-26 WB (Basic Analysis)	NW
6204	10	26.715985	I-26 WB (Basic Analysis)	NW
6205	1	27.704282	I-20 EB (Basic Analysis)	E
6205	2	28.522626	I-20 EB (Basic Analysis)	E

Existing AM

ID	Run	Density	Name (Type)	Direction
6205	3	27.737458	I-20 EB (Basic Analysis)	E
6205	4	29.02248	I-20 EB (Basic Analysis)	E
6205	5	28.593402	I-20 EB (Basic Analysis)	E
6205	6	29.219325	I-20 EB (Basic Analysis)	E
6205	7	26.379448	I-20 EB (Basic Analysis)	E
6205	8	28.038255	I-20 EB (Basic Analysis)	E
6205	9	27.51186	I-20 EB (Basic Analysis)	E
6205	10	28.469544	I-20 EB (Basic Analysis)	E
6206	1	24.040128	I-20 EB (Merge Analysis)	E
6206	2	24.33818	I-20 EB (Merge Analysis)	E
6206	3	25.358682	I-20 EB (Merge Analysis)	E
6206	4	24.309022	I-20 EB (Merge Analysis)	E
6206	5	25.118945	I-20 EB (Merge Analysis)	E
6206	6	24.723703	I-20 EB (Merge Analysis)	E
6206	7	24.475866	I-20 EB (Merge Analysis)	E
6206	8	23.826308	I-20 EB (Merge Analysis)	E
6206	9	24.273386	I-20 EB (Merge Analysis)	E
6206	10	24.174575	I-20 EB (Merge Analysis)	E
6207	1	24.040128	I-20 EB (Merge Analysis)	E
6207	2	24.33818	I-20 EB (Merge Analysis)	E
6207	3	25.358682	I-20 EB (Merge Analysis)	E
6207	4	24.309022	I-20 EB (Merge Analysis)	E
6207	5	25.118945	I-20 EB (Merge Analysis)	E
6207	6	24.723703	I-20 EB (Merge Analysis)	E
6207	7	24.475866	I-20 EB (Merge Analysis)	E
6207	8	23.826308	I-20 EB (Merge Analysis)	E
6207	9	24.273386	I-20 EB (Merge Analysis)	E
6207	10	24.174575	I-20 EB (Merge Analysis)	E
6208	1	24.769871	I-20 EB (Diverge Analysis)	E
6208	2	25.180661	I-20 EB (Diverge Analysis)	E
6208	3	26.12473	I-20 EB (Diverge Analysis)	E
6208	4	25.461492	I-20 EB (Diverge Analysis)	E
6208	5	25.8678	I-20 EB (Diverge Analysis)	E
6208	6	25.21203	I-20 EB (Diverge Analysis)	E
6208	7	25.459998	I-20 EB (Diverge Analysis)	E
6208	8	24.71012	I-20 EB (Diverge Analysis)	E
6208	9	24.837091	I-20 EB (Diverge Analysis)	E
6208	10	24.973025	I-20 EB (Diverge Analysis)	E
6209	1	24.769871	I-20 EB (Diverge Analysis)	E
6209	2	25.180661	I-20 EB (Diverge Analysis)	E
6209	3	26.12473	I-20 EB (Diverge Analysis)	E
6209	4	25.461492	I-20 EB (Diverge Analysis)	E
6209	5	25.8678	I-20 EB (Diverge Analysis)	E
6209	6	25.21203	I-20 EB (Diverge Analysis)	E
6209	7	25.459998	I-20 EB (Diverge Analysis)	E
6209	8	24.71012	I-20 EB (Diverge Analysis)	E
6209	9	24.837091	I-20 EB (Diverge Analysis)	E
6209	10	24.973025	I-20 EB (Diverge Analysis)	E
6216	1	19.541484	I-20 EB (Merge Analysis)	E
6216	2	17.891811	I-20 EB (Merge Analysis)	E
6216	3	18.956954	I-20 EB (Merge Analysis)	E
6216	4	18.717946	I-20 EB (Merge Analysis)	E
6216	5	19.133612	I-20 EB (Merge Analysis)	E
6216	6	18.917985	I-20 EB (Merge Analysis)	E
6216	7	19.094643	I-20 EB (Merge Analysis)	E
6216	8	19.105035	I-20 EB (Merge Analysis)	E
6216	9	19.647998	I-20 EB (Merge Analysis)	E
6216	10	18.842646	I-20 EB (Merge Analysis)	E
6217	1	21.842512	I-20 EB (Basic Analysis)	E
6217	2	22.47764	I-20 EB (Basic Analysis)	E
6217	3	20.587025	I-20 EB (Basic Analysis)	E
6217	4	23.056641	I-20 EB (Basic Analysis)	E
6217	5	23.254565	I-20 EB (Basic Analysis)	E
6217	6	21.405307	I-20 EB (Basic Analysis)	E

Existing AM

ID	Run	Density	Name (Type)	Direction
6217	7	23.000514	I-20 EB (Basic Analysis)	E
6217	8	20.654969	I-20 EB (Basic Analysis)	E
6217	9	20.802673	I-20 EB (Basic Analysis)	E
6217	10	19.984392	I-20 EB (Basic Analysis)	E
6220	1	14.369732	I-20 WB (Basic Analysis)	W
6220	2	13.596875	I-20 WB (Basic Analysis)	W
6220	3	13.661453	I-20 WB (Basic Analysis)	W
6220	4	13.628122	I-20 WB (Basic Analysis)	W
6220	5	14.594715	I-20 WB (Basic Analysis)	W
6220	6	13.255234	I-20 WB (Basic Analysis)	W
6220	7	13.049	I-20 WB (Basic Analysis)	W
6220	8	14.263491	I-20 WB (Basic Analysis)	W
6220	9	15.292578	I-20 WB (Basic Analysis)	W
6220	10	12.224063	I-20 WB (Basic Analysis)	W
6223	1	49.990598	I-26 EB (Weaving Analysis)	SE
6223	2	49.370206	I-26 EB (Weaving Analysis)	SE
6223	3	51.531784	I-26 EB (Weaving Analysis)	SE
6223	4	50.878739	I-26 EB (Weaving Analysis)	SE
6223	5	50.940779	I-26 EB (Weaving Analysis)	SE
6223	6	51.437093	I-26 EB (Weaving Analysis)	SE
6223	7	50.882005	I-26 EB (Weaving Analysis)	SE
6223	8	49.72938	I-26 EB (Weaving Analysis)	SE
6223	9	50.519565	I-26 EB (Weaving Analysis)	SE
6223	10	57.892443	I-26 EB (Weaving Analysis)	SE
6227	1	16.789538	I-20 WB (Basic Analysis)	W
6227	2	16.247674	I-20 WB (Basic Analysis)	W
6227	3	16.720774	I-20 WB (Basic Analysis)	W
6227	4	18.195085	I-20 WB (Basic Analysis)	W
6227	5	16.17891	I-20 WB (Basic Analysis)	W
6227	6	17.611962	I-20 WB (Basic Analysis)	W
6227	7	18.272101	I-20 WB (Basic Analysis)	W
6227	8	15.936859	I-20 WB (Basic Analysis)	W
6227	9	18.940492	I-20 WB (Basic Analysis)	W
6227	10	18.544408	I-20 WB (Basic Analysis)	W
6229	1	34.445199	I-20 WB (Merge Analysis)	W
6229	2	36.906366	I-20 WB (Merge Analysis)	W
6229	3	38.026698	I-20 WB (Merge Analysis)	W
6229	4	32.367128	I-20 WB (Merge Analysis)	W
6229	5	40.218361	I-20 WB (Merge Analysis)	W
6229	6	40.405454	I-20 WB (Merge Analysis)	W
6229	7	35.734806	I-20 WB (Merge Analysis)	W
6229	8	36.316131	I-20 WB (Merge Analysis)	W
6229	9	38.449885	I-20 WB (Merge Analysis)	W
6229	10	32.099852	I-20 WB (Merge Analysis)	W
6230	1	34.445199	I-20 WB (Merge+Diverge Analysis)	W
6230	2	36.906366	I-20 WB (Merge+Diverge Analysis)	W
6230	3	38.026698	I-20 WB (Merge+Diverge Analysis)	W
6230	4	32.367128	I-20 WB (Merge+Diverge Analysis)	W
6230	5	40.218361	I-20 WB (Merge+Diverge Analysis)	W
6230	6	40.405454	I-20 WB (Merge+Diverge Analysis)	W
6230	7	35.734806	I-20 WB (Merge+Diverge Analysis)	W
6230	8	36.316131	I-20 WB (Merge+Diverge Analysis)	W
6230	9	38.449885	I-20 WB (Merge+Diverge Analysis)	W
6230	10	32.099852	I-20 WB (Merge+Diverge Analysis)	W
6231	1	34.822371	I-20 WB (Diverge Analysis)	W
6231	2	37.251717	I-20 WB (Diverge Analysis)	W
6231	3	38.411872	I-20 WB (Diverge Analysis)	W
6231	4	32.677019	I-20 WB (Diverge Analysis)	W
6231	5	40.594705	I-20 WB (Diverge Analysis)	W
6231	6	40.862955	I-20 WB (Diverge Analysis)	W
6231	7	36.069194	I-20 WB (Diverge Analysis)	W
6231	8	36.65596	I-20 WB (Diverge Analysis)	W
6231	9	38.809679	I-20 WB (Diverge Analysis)	W
6231	10	32.428927	I-20 WB (Diverge Analysis)	W

Existing AM

ID	Run	Density	Name (Type)	Direction
6234	1	21.032604	I-20 WB (Basic Analysis)	W
6234	2	21.257034	I-20 WB (Basic Analysis)	W
6234	3	21.891889	I-20 WB (Basic Analysis)	W
6234	4	20.411474	I-20 WB (Basic Analysis)	W
6234	5	21.677754	I-20 WB (Basic Analysis)	W
6234	6	23.007863	I-20 WB (Basic Analysis)	W
6234	7	20.873375	I-20 WB (Basic Analysis)	W
6234	8	21.114963	I-20 WB (Basic Analysis)	W
6234	9	21.495877	I-20 WB (Basic Analysis)	W
6234	10	20.265286	I-20 WB (Basic Analysis)	W
6238	1	27.787705	I-20 EB (Basic Analysis)	NE
6238	2	28.91514	I-20 EB (Basic Analysis)	NE
6238	3	28.138124	I-20 EB (Basic Analysis)	NE
6238	4	28.863339	I-20 EB (Basic Analysis)	NE
6238	5	29.258448	I-20 EB (Basic Analysis)	NE
6238	6	28.063977	I-20 EB (Basic Analysis)	NE
6238	7	27.372281	I-20 EB (Basic Analysis)	NE
6238	8	28.037569	I-20 EB (Basic Analysis)	NE
6238	9	27.90959	I-20 EB (Basic Analysis)	NE
6238	10	27.971548	I-20 EB (Basic Analysis)	NE
6241	1	32.65101	I-20 EB (Merge Analysis)	NE
6241	2	32.904922	I-20 EB (Merge Analysis)	NE
6241	3	32.627169	I-20 EB (Merge Analysis)	NE
6241	4	32.715382	I-20 EB (Merge Analysis)	NE
6241	5	34.390251	I-20 EB (Merge Analysis)	NE
6241	6	32.07166	I-20 EB (Merge Analysis)	NE
6241	7	33.11592	I-20 EB (Merge Analysis)	NE
6241	8	31.45774	I-20 EB (Merge Analysis)	NE
6241	9	31.705692	I-20 EB (Merge Analysis)	NE
6241	10	32.758297	I-20 EB (Merge Analysis)	NE
6242	1	32.65101	I-20 EB (Merge Analysis)	NE
6242	2	32.904922	I-20 EB (Merge Analysis)	NE
6242	3	32.627169	I-20 EB (Merge Analysis)	NE
6242	4	32.715382	I-20 EB (Merge Analysis)	NE
6242	5	34.390251	I-20 EB (Merge Analysis)	NE
6242	6	32.07166	I-20 EB (Merge Analysis)	NE
6242	7	33.11592	I-20 EB (Merge Analysis)	NE
6242	8	31.45774	I-20 EB (Merge Analysis)	NE
6242	9	31.705692	I-20 EB (Merge Analysis)	NE
6242	10	32.758297	I-20 EB (Merge Analysis)	NE
6246	1	21.244532	I-20 WB (Merge Analysis)	SW
6246	2	21.024181	I-20 WB (Merge Analysis)	SW
6246	3	21.317983	I-20 WB (Merge Analysis)	SW
6246	4	20.925357	I-20 WB (Merge Analysis)	SW
6246	5	21.67188	I-20 WB (Merge Analysis)	SW
6246	6	21.531656	I-20 WB (Merge Analysis)	SW
6246	7	22.288863	I-20 WB (Merge Analysis)	SW
6246	8	21.439509	I-20 WB (Merge Analysis)	SW
6246	9	21.942979	I-20 WB (Merge Analysis)	SW
6246	10	21.016168	I-20 WB (Merge Analysis)	SW
6247	1	21.244532	I-20 WB (Merge Analysis)	SW
6247	2	21.024181	I-20 WB (Merge Analysis)	SW
6247	3	21.317983	I-20 WB (Merge Analysis)	SW
6247	4	20.925357	I-20 WB (Merge Analysis)	SW
6247	5	21.67188	I-20 WB (Merge Analysis)	SW
6247	6	21.531656	I-20 WB (Merge Analysis)	SW
6247	7	22.288863	I-20 WB (Merge Analysis)	SW
6247	8	21.439509	I-20 WB (Merge Analysis)	SW
6247	9	21.942979	I-20 WB (Merge Analysis)	SW
6247	10	21.016168	I-20 WB (Merge Analysis)	SW
6249	1	20.25564	I-20 WB (Diverge Analysis)	SW
6249	2	19.690484	I-20 WB (Diverge Analysis)	SW
6249	3	18.65404	I-20 WB (Diverge Analysis)	SW
6249	4	19.931018	I-20 WB (Diverge Analysis)	SW

Existing AM

ID	Run	Density	Name (Type)	Direction
6249	5	20.693684	I-20 WB (Diverge Analysis)	SW
6249	6	18.826129	I-20 WB (Diverge Analysis)	SW
6249	7	19.846929	I-20 WB (Diverge Analysis)	SW
6249	8	20.013151	I-20 WB (Diverge Analysis)	SW
6249	9	20.482484	I-20 WB (Diverge Analysis)	SW
6249	10	19.541862	I-20 WB (Diverge Analysis)	SW
6251	1	25.440882	I-20 WB (Basic Analysis)	SW
6251	2	26.111491	I-20 WB (Basic Analysis)	SW
6251	3	25.529055	I-20 WB (Basic Analysis)	SW
6251	4	25.550167	I-20 WB (Basic Analysis)	SW
6251	5	25.76501	I-20 WB (Basic Analysis)	SW
6251	6	25.955015	I-20 WB (Basic Analysis)	SW
6251	7	25.2397	I-20 WB (Basic Analysis)	SW
6251	8	25.935145	I-20 WB (Basic Analysis)	SW
6251	9	26.002206	I-20 WB (Basic Analysis)	SW
6251	10	25.85815	I-20 WB (Basic Analysis)	SW
6254	1	29.566756	I-20 EB (Basic Analysis)	NE
6254	2	30.432791	I-20 EB (Basic Analysis)	NE
6254	3	29.976588	I-20 EB (Basic Analysis)	NE
6254	4	30.224742	I-20 EB (Basic Analysis)	NE
6254	5	31.58082	I-20 EB (Basic Analysis)	NE
6254	6	29.997894	I-20 EB (Basic Analysis)	NE
6254	7	28.785946	I-20 EB (Basic Analysis)	NE
6254	8	29.195778	I-20 EB (Basic Analysis)	NE
6254	9	30.043013	I-20 EB (Basic Analysis)	NE
6254	10	29.677048	I-20 EB (Basic Analysis)	NE
6258	1	26.38816	I-20 EB (Merge Analysis)	E
6258	2	25.944573	I-20 EB (Merge Analysis)	E
6258	3	28.032038	I-20 EB (Merge Analysis)	E
6258	4	26.395987	I-20 EB (Merge Analysis)	E
6258	5	26.896979	I-20 EB (Merge Analysis)	E
6258	6	26.456002	I-20 EB (Merge Analysis)	E
6258	7	25.621016	I-20 EB (Merge Analysis)	E
6258	8	23.708377	I-20 EB (Merge Analysis)	E
6258	9	25.780185	I-20 EB (Merge Analysis)	E
6258	10	27.027446	I-20 EB (Merge Analysis)	E
6259	1	31.090951	I-20 EB (Basic Analysis)	E
6259	2	30.528563	I-20 EB (Basic Analysis)	E
6259	3	31.600141	I-20 EB (Basic Analysis)	E
6259	4	31.945174	I-20 EB (Basic Analysis)	E
6259	5	31.755177	I-20 EB (Basic Analysis)	E
6259	6	31.13807	I-20 EB (Basic Analysis)	E
6259	7	30.286888	I-20 EB (Basic Analysis)	E
6259	8	31.051432	I-20 EB (Basic Analysis)	E
6259	9	32.088051	I-20 EB (Basic Analysis)	E
6259	10	31.259668	I-20 EB (Basic Analysis)	E
8539	1	14.721017	I-20 WB (Basic Analysis)	SW
8539	2	14.566202	I-20 WB (Basic Analysis)	SW
8539	3	14.765412	I-20 WB (Basic Analysis)	SW
8539	4	14.484242	I-20 WB (Basic Analysis)	SW
8539	5	15.970914	I-20 WB (Basic Analysis)	SW
8539	6	14.412526	I-20 WB (Basic Analysis)	SW
8539	7	14.193965	I-20 WB (Basic Analysis)	SW
8539	8	14.352194	I-20 WB (Basic Analysis)	SW
8539	9	14.963483	I-20 WB (Basic Analysis)	SW
8539	10	13.97085	I-20 WB (Basic Analysis)	SW
8542	1	32.344074	I-20 EB (Basic Analysis)	NE
8542	2	33.972009	I-20 EB (Basic Analysis)	NE
8542	3	32.569462	I-20 EB (Basic Analysis)	NE
8542	4	32.995128	I-20 EB (Basic Analysis)	NE
8542	5	34.010869	I-20 EB (Basic Analysis)	NE
8542	6	33.130839	I-20 EB (Basic Analysis)	NE
8542	7	32.191623	I-20 EB (Basic Analysis)	NE
8542	8	31.574646	I-20 EB (Basic Analysis)	NE

Existing AM

ID	Run	Density	Name (Type)	Direction
8542	9	31.376161	I-20 EB (Basic Analysis)	NE
8542	10	31.61231	I-20 EB (Basic Analysis)	NE
8543	1	51.729318	I-20 EB (Diverge Analysis)	NE
8543	2	52.735451	I-20 EB (Diverge Analysis)	NE
8543	3	56.12345	I-20 EB (Diverge Analysis)	NE
8543	4	52.216251	I-20 EB (Diverge Analysis)	NE
8543	5	62.025315	I-20 EB (Diverge Analysis)	NE
8543	6	53.231184	I-20 EB (Diverge Analysis)	NE
8543	7	49.233052	I-20 EB (Diverge Analysis)	NE
8543	8	48.625852	I-20 EB (Diverge Analysis)	NE
8543	9	47.798652	I-20 EB (Diverge Analysis)	NE
8543	10	50.814118	I-20 EB (Diverge Analysis)	NE
8551	1	28.755458	I-26 WB (Diverge Analysis)	NW
8551	2	28.309592	I-26 WB (Diverge Analysis)	NW
8551	3	27.033592	I-26 WB (Diverge Analysis)	NW
8551	4	28.767191	I-26 WB (Diverge Analysis)	NW
8551	5	28.330125	I-26 WB (Diverge Analysis)	NW
8551	6	28.277325	I-26 WB (Diverge Analysis)	NW
8551	7	26.869325	I-26 WB (Diverge Analysis)	NW
8551	8	29.171991	I-26 WB (Diverge Analysis)	NW
8551	9	28.673325	I-26 WB (Diverge Analysis)	NW
8551	10	29.327458	I-26 WB (Diverge Analysis)	NW
8552	1	69.976357	I-26 EB (Basic Analysis)	SE
8552	2	62.573155	I-26 EB (Basic Analysis)	SE
8552	3	71.220901	I-26 EB (Basic Analysis)	SE
8552	4	68.657499	I-26 EB (Basic Analysis)	SE
8552	5	63.51959	I-26 EB (Basic Analysis)	SE
8552	6	68.156094	I-26 EB (Basic Analysis)	SE
8552	7	70.51193	I-26 EB (Basic Analysis)	SE
8552	8	65.459439	I-26 EB (Basic Analysis)	SE
8552	9	72.514134	I-26 EB (Basic Analysis)	SE
8552	10	65.469689	I-26 EB (Basic Analysis)	SE
8553	1	25.451131	I-26 EB (Basic Analysis)	S
8553	2	24.937562	I-26 EB (Basic Analysis)	S
8553	3	26.59277	I-26 EB (Basic Analysis)	S
8553	4	27.491936	I-26 EB (Basic Analysis)	S
8553	5	24.858422	I-26 EB (Basic Analysis)	S
8553	6	24.935878	I-26 EB (Basic Analysis)	S
8553	7	25.422506	I-26 EB (Basic Analysis)	S
8553	8	25.144673	I-26 EB (Basic Analysis)	S
8553	9	33.589094	I-26 EB (Basic Analysis)	S
8553	10	25.013334	I-26 EB (Basic Analysis)	S
8554	1	17.992722	I-26 WB (Basic Analysis)	N
8554	2	17.177558	I-26 WB (Basic Analysis)	N
8554	3	17.345966	I-26 WB (Basic Analysis)	N
8554	4	17.949724	I-26 WB (Basic Analysis)	N
8554	5	16.718917	I-26 WB (Basic Analysis)	N
8554	6	17.258179	I-26 WB (Basic Analysis)	N
8554	7	17.84223	I-26 WB (Basic Analysis)	N
8554	8	18.325954	I-26 WB (Basic Analysis)	N
8554	9	18.472862	I-26 WB (Basic Analysis)	N
8554	10	17.870895	I-26 WB (Basic Analysis)	N
8559	1	15.649329	I-126 NB (Diverge Analysis)	W
8559	2	15.555462	I-126 NB (Diverge Analysis)	W
8559	3	14.951196	I-126 NB (Diverge Analysis)	W
8559	4	16.802128	I-126 NB (Diverge Analysis)	W
8559	5	14.678396	I-126 NB (Diverge Analysis)	W
8559	6	13.707463	I-126 NB (Diverge Analysis)	W
8559	7	14.962929	I-126 NB (Diverge Analysis)	W
8559	8	15.071462	I-126 NB (Diverge Analysis)	W
8559	9	14.569862	I-126 NB (Diverge Analysis)	W
8559	10	17.330128	I-126 NB (Diverge Analysis)	W
8560	1	26.637017	I-126 SB (Basic Analysis)	E
8560	2	26.54838	I-126 SB (Basic Analysis)	E

Existing AM

ID	Run	Density	Name (Type)	Direction
8560	3	26.024503	I-126 SB (Basic Analysis)	E
8560	4	26.324647	I-126 SB (Basic Analysis)	E
8560	5	26.892537	I-126 SB (Basic Analysis)	E
8560	6	25.739641	I-126 SB (Basic Analysis)	E
8560	7	26.865029	I-126 SB (Basic Analysis)	E
8560	8	26.712206	I-126 SB (Basic Analysis)	E
8560	9	25.849674	I-126 SB (Basic Analysis)	E
8560	10	27.733674	I-126 SB (Basic Analysis)	E
8658	1	29.233434	I-20 WB (Basic Analysis)	SW
8658	2	29.502792	I-20 WB (Basic Analysis)	SW
8658	3	29.517885	I-20 WB (Basic Analysis)	SW
8658	4	28.912701	I-20 WB (Basic Analysis)	SW
8658	5	29.658369	I-20 WB (Basic Analysis)	SW
8658	6	29.705391	I-20 WB (Basic Analysis)	SW
8658	7	29.60293	I-20 WB (Basic Analysis)	SW
8658	8	29.097304	I-20 WB (Basic Analysis)	SW
8658	9	29.6247	I-20 WB (Basic Analysis)	SW
8658	10	28.624477	I-20 WB (Basic Analysis)	SW
8659	1	35.261576	I-20 EB (Basic Analysis)	NE
8659	2	35.664763	I-20 EB (Basic Analysis)	NE
8659	3	35.352522	I-20 EB (Basic Analysis)	NE
8659	4	36.002641	I-20 EB (Basic Analysis)	NE
8659	5	36.127051	I-20 EB (Basic Analysis)	NE
8659	6	35.73304	I-20 EB (Basic Analysis)	NE
8659	7	35.009517	I-20 EB (Basic Analysis)	NE
8659	8	35.16955	I-20 EB (Basic Analysis)	NE
8659	9	35.292341	I-20 EB (Basic Analysis)	NE
8659	10	35.502301	I-20 EB (Basic Analysis)	NE
8763	1	50.28308	I-26 EB (Basic Analysis)	SE
8763	2	50.020927	I-26 EB (Basic Analysis)	SE
8763	3	49.949312	I-26 EB (Basic Analysis)	SE
8763	4	52.730567	I-26 EB (Basic Analysis)	SE
8763	5	51.27961	I-26 EB (Basic Analysis)	SE
8763	6	48.492061	I-26 EB (Basic Analysis)	SE
8763	7	50.893324	I-26 EB (Basic Analysis)	SE
8763	8	49.071055	I-26 EB (Basic Analysis)	SE
8763	9	47.405688	I-26 EB (Basic Analysis)	SE
8763	10	50.279174	I-26 EB (Basic Analysis)	SE
8764	1	15.367391	I-20 WB (Basic Analysis)	S
8764	2	15.657885	I-20 WB (Basic Analysis)	S
8764	3	15.07052	I-20 WB (Basic Analysis)	S
8764	4	15.575541	I-20 WB (Basic Analysis)	S
8764	5	16.153315	I-20 WB (Basic Analysis)	S
8764	6	15.595604	I-20 WB (Basic Analysis)	S
8764	7	15.212511	I-20 WB (Basic Analysis)	S
8764	8	15.53972	I-20 WB (Basic Analysis)	S
8764	9	15.48028	I-20 WB (Basic Analysis)	S
8764	10	15.540299	I-20 WB (Basic Analysis)	S
8765	1	43.533556	I-20 EB (Basic Analysis)	NE
8765	2	43.678865	I-20 EB (Basic Analysis)	NE
8765	3	43.307263	I-20 EB (Basic Analysis)	NE
8765	4	43.59055	I-20 EB (Basic Analysis)	NE
8765	5	43.666997	I-20 EB (Basic Analysis)	NE
8765	6	44.127079	I-20 EB (Basic Analysis)	NE
8765	7	43.881854	I-20 EB (Basic Analysis)	NE
8765	8	43.895512	I-20 EB (Basic Analysis)	NE
8765	9	43.292905	I-20 EB (Basic Analysis)	NE
8765	10	43.405572	I-20 EB (Basic Analysis)	NE
8770	1	30.227991	I-20 WB (Diverge Analysis)	SW
8770	2	29.435991	I-20 WB (Diverge Analysis)	SW
8770	3	29.201324	I-20 WB (Diverge Analysis)	SW
8770	4	30.905591	I-20 WB (Diverge Analysis)	SW
8770	5	31.281057	I-20 WB (Diverge Analysis)	SW
8770	6	30.629857	I-20 WB (Diverge Analysis)	SW

Existing AM

ID	Run	Density	Name (Type)	Direction
8770	7	30.902658	I-20 WB (Diverge Analysis)	SW
8770	8	31.30159	I-20 WB (Diverge Analysis)	SW
8770	9	29.925858	I-20 WB (Diverge Analysis)	SW
8770	10	28.350658	I-20 WB (Diverge Analysis)	SW
8773	1	21.661332	I-26 WB (Basic Analysis)	N
8773	2	20.121671	I-26 WB (Basic Analysis)	N
8773	3	20.750795	I-26 WB (Basic Analysis)	N
8773	4	22.31403	I-26 WB (Basic Analysis)	N
8773	5	20.964433	I-26 WB (Basic Analysis)	N
8773	6	20.464964	I-26 WB (Basic Analysis)	N
8773	7	20.764056	I-26 WB (Basic Analysis)	N
8773	8	20.80531	I-26 WB (Basic Analysis)	N
8773	9	22.094499	I-26 WB (Basic Analysis)	N
8773	10	20.932019	I-26 WB (Basic Analysis)	N
8774	1	34.847973	I-20 EB (Diverge Analysis)	NE
8774	2	34.581586	I-20 EB (Diverge Analysis)	NE
8774	3	36.125484	I-20 EB (Diverge Analysis)	NE
8774	4	35.392204	I-20 EB (Diverge Analysis)	NE
8774	5	36.515039	I-20 EB (Diverge Analysis)	NE
8774	6	35.965079	I-20 EB (Diverge Analysis)	NE
8774	7	35.899198	I-20 EB (Diverge Analysis)	NE
8774	8	33.198094	I-20 EB (Diverge Analysis)	NE
8774	9	34.33525	I-20 EB (Diverge Analysis)	NE
8774	10	34.47274	I-20 EB (Diverge Analysis)	NE
8783	1	23.598368	I-26 WB (Basic Analysis)	NW
8783	2	23.700192	I-26 WB (Basic Analysis)	NW
8783	3	22.94908	I-26 WB (Basic Analysis)	NW
8783	4	24.087771	I-26 WB (Basic Analysis)	NW
8783	5	23.261051	I-26 WB (Basic Analysis)	NW
8783	6	23.895173	I-26 WB (Basic Analysis)	NW
8783	7	22.994576	I-26 WB (Basic Analysis)	NW
8783	8	22.733735	I-26 WB (Basic Analysis)	NW
8783	9	23.548973	I-26 WB (Basic Analysis)	NW
8783	10	23.633681	I-26 WB (Basic Analysis)	NW
8784	1	58.433725	I-26 EB (Basic Analysis)	SE
8784	2	54.115272	I-26 EB (Basic Analysis)	SE
8784	3	58.067572	I-26 EB (Basic Analysis)	SE
8784	4	56.549113	I-26 EB (Basic Analysis)	SE
8784	5	61.653719	I-26 EB (Basic Analysis)	SE
8784	6	54.707579	I-26 EB (Basic Analysis)	SE
8784	7	52.359892	I-26 EB (Basic Analysis)	SE
8784	8	51.002971	I-26 EB (Basic Analysis)	SE
8784	9	45.941443	I-26 EB (Basic Analysis)	SE
8784	10	57.28142	I-26 EB (Basic Analysis)	SE
8817	1	25.310136	I-26 WB (Basic Analysis)	NW
8817	2	25.690908	I-26 WB (Basic Analysis)	NW
8817	3	25.626912	I-26 WB (Basic Analysis)	NW
8817	4	24.452599	I-26 WB (Basic Analysis)	NW
8817	5	26.46845	I-26 WB (Basic Analysis)	NW
8817	6	26.990012	I-26 WB (Basic Analysis)	NW
8817	7	24.938963	I-26 WB (Basic Analysis)	NW
8817	8	27.297189	I-26 WB (Basic Analysis)	NW
8817	9	26.593241	I-26 WB (Basic Analysis)	NW
8817	10	27.901945	I-26 WB (Basic Analysis)	NW

Existing PM

ID	Run	Density	Name (Type)	Direction
2466	1	24.278801	I-20 EB (Weaving Analysis)	E
2466	2	23.87083	I-20 EB (Weaving Analysis)	E
2466	3	24.09748	I-20 EB (Weaving Analysis)	E
2466	4	26.771956	I-20 EB (Weaving Analysis)	E
2466	5	24.42839	I-20 EB (Weaving Analysis)	E
2466	6	23.331402	I-20 EB (Weaving Analysis)	E
2466	7	22.646917	I-20 EB (Weaving Analysis)	E
2466	8	23.703109	I-20 EB (Weaving Analysis)	E
2466	9	23.766571	I-20 EB (Weaving Analysis)	E
2466	10	21.821909	I-20 EB (Weaving Analysis)	E
2467	1	27.710497	I-20 WB (Weaving Analysis)	W
2467	2	26.007587	I-20 WB (Weaving Analysis)	W
2467	3	25.461782	I-20 WB (Weaving Analysis)	W
2467	4	27.666833	I-20 WB (Weaving Analysis)	W
2467	5	27.039158	I-20 WB (Weaving Analysis)	W
2467	6	27.683207	I-20 WB (Weaving Analysis)	W
2467	7	23.305854	I-20 WB (Weaving Analysis)	W
2467	8	26.979119	I-20 WB (Weaving Analysis)	W
2467	9	25.942091	I-20 WB (Weaving Analysis)	W
2467	10	23.420473	I-20 WB (Weaving Analysis)	W
2806	1	21.061298	I-20 EB (Basic Analysis)	NE
2806	2	20.293476	I-20 EB (Basic Analysis)	NE
2806	3	21.593464	I-20 EB (Basic Analysis)	NE
2806	4	20.873201	I-20 EB (Basic Analysis)	NE
2806	5	21.235293	I-20 EB (Basic Analysis)	NE
2806	6	21.552997	I-20 EB (Basic Analysis)	NE
2806	7	20.866546	I-20 EB (Basic Analysis)	NE
2806	8	20.96225	I-20 EB (Basic Analysis)	NE
2806	9	20.416161	I-20 EB (Basic Analysis)	NE
2806	10	20.60993	I-20 EB (Basic Analysis)	NE
2807	1	21.061298	I-20 EB (Basic Analysis)	NE
2807	2	20.293476	I-20 EB (Basic Analysis)	NE
2807	3	21.593464	I-20 EB (Basic Analysis)	NE
2807	4	20.873201	I-20 EB (Basic Analysis)	NE
2807	5	21.235293	I-20 EB (Basic Analysis)	NE
2807	6	21.552997	I-20 EB (Basic Analysis)	NE
2807	7	20.866546	I-20 EB (Basic Analysis)	NE
2807	8	20.96225	I-20 EB (Basic Analysis)	NE
2807	9	20.416161	I-20 EB (Basic Analysis)	NE
2807	10	20.60993	I-20 EB (Basic Analysis)	NE
2808	1	19.889424	I-20 EB (Diverge Analysis)	NE
2808	2	19.250179	I-20 EB (Diverge Analysis)	NE
2808	3	19.155775	I-20 EB (Diverge Analysis)	NE
2808	4	18.574521	I-20 EB (Diverge Analysis)	NE
2808	5	20.418082	I-20 EB (Diverge Analysis)	NE
2808	6	20.668925	I-20 EB (Diverge Analysis)	NE
2808	7	19.144986	I-20 EB (Diverge Analysis)	NE
2808	8	19.256922	I-20 EB (Diverge Analysis)	NE
2808	9	19.345931	I-20 EB (Diverge Analysis)	NE
2808	10	17.831432	I-20 EB (Diverge Analysis)	NE
2813	1	30.078896	I-20 WB (Merge Analysis)	S
2813	2	27.118271	I-20 WB (Merge Analysis)	S
2813	3	28.001221	I-20 WB (Merge Analysis)	S
2813	4	27.761777	I-20 WB (Merge Analysis)	S
2813	5	28.919089	I-20 WB (Merge Analysis)	S
2813	6	29.627444	I-20 WB (Merge Analysis)	S
2813	7	28.38907	I-20 WB (Merge Analysis)	S
2813	8	30.142498	I-20 WB (Merge Analysis)	S
2813	9	30.754826	I-20 WB (Merge Analysis)	S
2813	10	29.325645	I-20 WB (Merge Analysis)	S
2814	1	34.343185	I-20 WB (Basic Analysis)	S
2814	2	31.908932	I-20 WB (Basic Analysis)	S
2814	3	32.83189	I-20 WB (Basic Analysis)	S
2814	4	31.645274	I-20 WB (Basic Analysis)	S

Existing PM

ID	Run	Density	Name (Type)	Direction
2814	5	33.31308	I-20 WB (Basic Analysis)	S
2814	6	34.619752	I-20 WB (Basic Analysis)	S
2814	7	32.752166	I-20 WB (Basic Analysis)	S
2814	8	34.492634	I-20 WB (Basic Analysis)	S
2814	9	34.227621	I-20 WB (Basic Analysis)	S
2814	10	33.223562	I-20 WB (Basic Analysis)	S
2815	1	34.343185	I-20 WB (Basic Analysis)	S
2815	2	31.908932	I-20 WB (Basic Analysis)	S
2815	3	32.83189	I-20 WB (Basic Analysis)	S
2815	4	31.645274	I-20 WB (Basic Analysis)	S
2815	5	33.31308	I-20 WB (Basic Analysis)	S
2815	6	34.619752	I-20 WB (Basic Analysis)	S
2815	7	32.752166	I-20 WB (Basic Analysis)	S
2815	8	34.492634	I-20 WB (Basic Analysis)	S
2815	9	34.227621	I-20 WB (Basic Analysis)	S
2815	10	33.223562	I-20 WB (Basic Analysis)	S
2822	1	14.127896	I-20 WB (Merge Analysis)	SW
2822	2	14.098621	I-20 WB (Merge Analysis)	SW
2822	3	13.935165	I-20 WB (Merge Analysis)	SW
2822	4	13.630212	I-20 WB (Merge Analysis)	SW
2822	5	13.056899	I-20 WB (Merge Analysis)	SW
2822	6	13.942484	I-20 WB (Merge Analysis)	SW
2822	7	13.430162	I-20 WB (Merge Analysis)	SW
2822	8	14.262076	I-20 WB (Merge Analysis)	SW
2822	9	13.920528	I-20 WB (Merge Analysis)	SW
2822	10	14.420652	I-20 WB (Merge Analysis)	SW
2823	1	986.189563	I-20 WB (Basic Analysis)	SW
2823	2	427.969055	I-20 WB (Basic Analysis)	SW
2823	3	427.969051	I-20 WB (Basic Analysis)	SW
2823	4	497.746615	I-20 WB (Basic Analysis)	SW
2823	5	800.11606	I-20 WB (Basic Analysis)	SW
2823	6	679.168282	I-20 WB (Basic Analysis)	SW
2823	7	325.62863	I-20 WB (Basic Analysis)	SW
2823	8	451.228243	I-20 WB (Basic Analysis)	SW
2823	9	441.924569	I-20 WB (Basic Analysis)	SW
2823	10	953.626701	I-20 WB (Basic Analysis)	SW
2826	1	14.303767	I-20 EB (Basic Analysis)	NE
2826	2	13.240483	I-20 EB (Basic Analysis)	NE
2826	3	14.164365	I-20 EB (Basic Analysis)	NE
2826	4	12.967145	I-20 EB (Basic Analysis)	NE
2826	5	14.844976	I-20 EB (Basic Analysis)	NE
2826	6	13.317017	I-20 EB (Basic Analysis)	NE
2826	7	11.720725	I-20 EB (Basic Analysis)	NE
2826	8	14.180765	I-20 EB (Basic Analysis)	NE
2826	9	13.207682	I-20 EB (Basic Analysis)	NE
2826	10	12.294734	I-20 EB (Basic Analysis)	NE
2829	1	16.272278	I-20 EB (Merge Analysis)	NE
2829	2	13.988754	I-20 EB (Merge Analysis)	NE
2829	3	16.376413	I-20 EB (Merge Analysis)	NE
2829	4	15.81359	I-20 EB (Merge Analysis)	NE
2829	5	15.481351	I-20 EB (Merge Analysis)	NE
2829	6	16.656585	I-20 EB (Merge Analysis)	NE
2829	7	15.337546	I-20 EB (Merge Analysis)	NE
2829	8	14.630918	I-20 EB (Merge Analysis)	NE
2829	9	15.317711	I-20 EB (Merge Analysis)	NE
2829	10	15.059853	I-20 EB (Merge Analysis)	NE
2830	1	18.065514	I-20 EB (Basic Analysis)	NE
2830	2	17.392511	I-20 EB (Basic Analysis)	NE
2830	3	17.392511	I-20 EB (Basic Analysis)	NE
2830	4	15.624228	I-20 EB (Basic Analysis)	NE
2830	5	18.355829	I-20 EB (Basic Analysis)	NE
2830	6	17.247353	I-20 EB (Basic Analysis)	NE
2830	7	20.625564	I-20 EB (Basic Analysis)	NE
2830	8	18.435006	I-20 EB (Basic Analysis)	NE

Existing PM

ID	Run	Density	Name (Type)	Direction
2830	9	17.577256	I-20 EB (Basic Analysis)	NE
2830	10	17.748806	I-20 EB (Basic Analysis)	NE
2831	1	19.428534	I-20 WB (Basic Analysis)	SW
2831	2	18.041102	I-20 WB (Basic Analysis)	SW
2831	3	18.520763	I-20 WB (Basic Analysis)	SW
2831	4	18.103861	I-20 WB (Basic Analysis)	SW
2831	5	18.641799	I-20 WB (Basic Analysis)	SW
2831	6	20.475272	I-20 WB (Basic Analysis)	SW
2831	7	18.785249	I-20 WB (Basic Analysis)	SW
2831	8	21.434595	I-20 WB (Basic Analysis)	SW
2831	9	19.446465	I-20 WB (Basic Analysis)	SW
2831	10	17.796788	I-20 WB (Basic Analysis)	SW
2837	1	20.632618	I-20 WB (Merge Analysis)	SW
2837	2	19.986754	I-20 WB (Merge Analysis)	SW
2837	3	19.793996	I-20 WB (Merge Analysis)	SW
2837	4	20.129445	I-20 WB (Merge Analysis)	SW
2837	5	20.427343	I-20 WB (Merge Analysis)	SW
2837	6	19.571198	I-20 WB (Merge Analysis)	SW
2837	7	19.929177	I-20 WB (Merge Analysis)	SW
2837	8	20.837893	I-20 WB (Merge Analysis)	SW
2837	9	20.562524	I-20 WB (Merge Analysis)	SW
2837	10	21.023141	I-20 WB (Merge Analysis)	SW
2838	1	33.677293	I-20 WB (Basic Analysis)	SW
2838	2	29.845957	I-20 WB (Basic Analysis)	SW
2838	3	33.877717	I-20 WB (Basic Analysis)	SW
2838	4	33.306813	I-20 WB (Basic Analysis)	SW
2838	5	32.333036	I-20 WB (Basic Analysis)	SW
2838	6	32.055681	I-20 WB (Basic Analysis)	SW
2838	7	30.342968	I-20 WB (Basic Analysis)	SW
2838	8	64.45755	I-20 WB (Basic Analysis)	SW
2838	9	31.556646	I-20 WB (Basic Analysis)	SW
2838	10	32.598243	I-20 WB (Basic Analysis)	SW
2839	1	34.282547	I-20 WB (Diverge Analysis)	SW
2839	2	35.472703	I-20 WB (Diverge Analysis)	SW
2839	3	49.020815	I-20 WB (Diverge Analysis)	SW
2839	4	52.523203	I-20 WB (Diverge Analysis)	SW
2839	5	35.039003	I-20 WB (Diverge Analysis)	SW
2839	6	41.758846	I-20 WB (Diverge Analysis)	SW
2839	7	31.972838	I-20 WB (Diverge Analysis)	SW
2839	8	81.268499	I-20 WB (Diverge Analysis)	SW
2839	9	39.436529	I-20 WB (Diverge Analysis)	SW
2839	10	33.626953	I-20 WB (Diverge Analysis)	SW
2840	1	34.282547	I-20 WB (Diverge Analysis)	SW
2840	2	35.472703	I-20 WB (Diverge Analysis)	SW
2840	3	49.020815	I-20 WB (Diverge Analysis)	SW
2840	4	52.523203	I-20 WB (Diverge Analysis)	SW
2840	5	35.039003	I-20 WB (Diverge Analysis)	SW
2840	6	41.758846	I-20 WB (Diverge Analysis)	SW
2840	7	31.972838	I-20 WB (Diverge Analysis)	SW
2840	8	81.268499	I-20 WB (Diverge Analysis)	SW
2840	9	39.436529	I-20 WB (Diverge Analysis)	SW
2840	10	33.626953	I-20 WB (Diverge Analysis)	SW
2843	1	16.307252	I-20 EB (Merge Analysis)	NE
2843	2	16.491295	I-20 EB (Merge Analysis)	NE
2843	3	16.139136	I-20 EB (Merge Analysis)	NE
2843	4	16.215231	I-20 EB (Merge Analysis)	NE
2843	5	16.985025	I-20 EB (Merge Analysis)	NE
2843	6	16.303713	I-20 EB (Merge Analysis)	NE
2843	7	16.484216	I-20 EB (Merge Analysis)	NE
2843	8	17.101822	I-20 EB (Merge Analysis)	NE
2843	9	16.707191	I-20 EB (Merge Analysis)	NE
2843	10	15.314483	I-20 EB (Merge Analysis)	NE
2844	1	16.307252	I-20 EB (Merge Analysis)	NE
2844	2	16.491295	I-20 EB (Merge Analysis)	NE

Existing PM

ID	Run	Density	Name (Type)	Direction
2844	3	16.139136	I-20 EB (Merge Analysis)	NE
2844	4	16.215231	I-20 EB (Merge Analysis)	NE
2844	5	16.985025	I-20 EB (Merge Analysis)	NE
2844	6	16.303713	I-20 EB (Merge Analysis)	NE
2844	7	16.484216	I-20 EB (Merge Analysis)	NE
2844	8	17.101822	I-20 EB (Merge Analysis)	NE
2844	9	16.707191	I-20 EB (Merge Analysis)	NE
2844	10	15.314483	I-20 EB (Merge Analysis)	NE
2848	1	18.705051	I-20 EB (Basic Analysis)	NE
2848	2	15.201373	I-20 EB (Basic Analysis)	NE
2848	3	16.49847	I-20 EB (Basic Analysis)	NE
2848	4	15.915967	I-20 EB (Basic Analysis)	NE
2848	5	16.39886	I-20 EB (Basic Analysis)	NE
2848	6	15.591151	I-20 EB (Basic Analysis)	NE
2848	7	15.725409	I-20 EB (Basic Analysis)	NE
2848	8	16.704186	I-20 EB (Basic Analysis)	NE
2848	9	15.775214	I-20 EB (Basic Analysis)	NE
2848	10	14.735803	I-20 EB (Basic Analysis)	NE
2852	1	24.277369	I-20 WB (Basic Analysis)	SW
2852	2	21.165495	I-20 WB (Basic Analysis)	SW
2852	3	22.001104	I-20 WB (Basic Analysis)	SW
2852	4	22.868851	I-20 WB (Basic Analysis)	SW
2852	5	22.984831	I-20 WB (Basic Analysis)	SW
2852	6	23.828823	I-20 WB (Basic Analysis)	SW
2852	7	20.894411	I-20 WB (Basic Analysis)	SW
2852	8	22.608946	I-20 WB (Basic Analysis)	SW
2852	9	22.794792	I-20 WB (Basic Analysis)	SW
2852	10	23.331371	I-20 WB (Basic Analysis)	SW
2856	1	15.134385	I-20 EB (Basic Analysis)	NE
2856	2	13.984572	I-20 EB (Basic Analysis)	NE
2856	3	14.27347	I-20 EB (Basic Analysis)	NE
2856	4	14.032722	I-20 EB (Basic Analysis)	NE
2856	5	13.657155	I-20 EB (Basic Analysis)	NE
2856	6	14.74341	I-20 EB (Basic Analysis)	NE
2856	7	14.192579	I-20 EB (Basic Analysis)	NE
2856	8	14.071242	I-20 EB (Basic Analysis)	NE
2856	9	14.142503	I-20 EB (Basic Analysis)	NE
2856	10	13.379813	I-20 EB (Basic Analysis)	NE
2859	1	67.451997	I-20 WB (Weaving Analysis)	SW
2859	2	60.752294	I-20 WB (Weaving Analysis)	SW
2859	3	38.264063	I-20 WB (Weaving Analysis)	SW
2859	4	50.931283	I-20 WB (Weaving Analysis)	SW
2859	5	53.297129	I-20 WB (Weaving Analysis)	SW
2859	6	49.295506	I-20 WB (Weaving Analysis)	SW
2859	7	39.77922	I-20 WB (Weaving Analysis)	SW
2859	8	54.033546	I-20 WB (Weaving Analysis)	SW
2859	9	51.020161	I-20 WB (Weaving Analysis)	SW
2859	10	50.042504	I-20 WB (Weaving Analysis)	SW
2863	1	13.288313	I-20 EB (Merge Analysis)	E
2863	2	12.701185	I-20 EB (Merge Analysis)	E
2863	3	13.737751	I-20 EB (Merge Analysis)	E
2863	4	13.929997	I-20 EB (Merge Analysis)	E
2863	5	13.496146	I-20 EB (Merge Analysis)	E
2863	6	14.143025	I-20 EB (Merge Analysis)	E
2863	7	14.75873	I-20 EB (Merge Analysis)	E
2863	8	13.672803	I-20 EB (Merge Analysis)	E
2863	9	12.745349	I-20 EB (Merge Analysis)	E
2863	10	12.823287	I-20 EB (Merge Analysis)	E
4563	1	8.955464	I-126 SB (Merge Analysis)	E
4563	2	9.905864	I-126 SB (Merge Analysis)	E
4563	3	10.480797	I-126 SB (Merge Analysis)	E
4563	4	8.621064	I-126 SB (Merge Analysis)	E
4563	5	9.803197	I-126 SB (Merge Analysis)	E
4563	6	10.46613	I-126 SB (Merge Analysis)	E

Existing PM

ID	Run	Density	Name (Type)	Direction
4563	7	10.020264	I-126 SB (Merge Analysis)	E
4563	8	9.63013	I-126 SB (Merge Analysis)	E
4563	9	10.647997	I-126 SB (Merge Analysis)	E
4563	10	9.627197	I-126 SB (Merge Analysis)	E
4566	1	25.391564	I-126 NB (Basic Analysis)	W
4566	2	26.1608	I-126 NB (Basic Analysis)	W
4566	3	25.820983	I-126 NB (Basic Analysis)	W
4566	4	26.626568	I-126 NB (Basic Analysis)	W
4566	5	26.253785	I-126 NB (Basic Analysis)	W
4566	6	24.875922	I-126 NB (Basic Analysis)	W
4566	7	26.272382	I-126 NB (Basic Analysis)	W
4566	8	25.281673	I-126 NB (Basic Analysis)	W
4566	9	25.110919	I-126 NB (Basic Analysis)	W
4566	10	25.722927	I-126 NB (Basic Analysis)	W
4570	1	22.632992	I-126 NB (Basic Analysis)	NW
4570	2	25.512017	I-126 NB (Basic Analysis)	NW
4570	3	24.490773	I-126 NB (Basic Analysis)	NW
4570	4	24.135662	I-126 NB (Basic Analysis)	NW
4570	5	24.347775	I-126 NB (Basic Analysis)	NW
4570	6	22.849872	I-126 NB (Basic Analysis)	NW
4570	7	24.306068	I-126 NB (Basic Analysis)	NW
4570	8	23.077477	I-126 NB (Basic Analysis)	NW
4570	9	23.91044	I-126 NB (Basic Analysis)	NW
4570	10	25.931477	I-126 NB (Basic Analysis)	NW
4573	1	10.179073	I-126 SB (Basic Analysis)	E
4573	2	12.466417	I-126 SB (Basic Analysis)	E
4573	3	11.44982	I-126 SB (Basic Analysis)	E
4573	4	9.843701	I-126 SB (Basic Analysis)	E
4573	5	11.669908	I-126 SB (Basic Analysis)	E
4573	6	11.059426	I-126 SB (Basic Analysis)	E
4573	7	12.458557	I-126 SB (Basic Analysis)	E
4573	8	11.145889	I-126 SB (Basic Analysis)	E
4573	9	9.935404	I-126 SB (Basic Analysis)	E
4573	10	10.268157	I-126 SB (Basic Analysis)	E
4578	1	13.77575	I-126 SB (Basic Analysis)	E
4578	2	13.364193	I-126 SB (Basic Analysis)	E
4578	3	14.174631	I-126 SB (Basic Analysis)	E
4578	4	13.786737	I-126 SB (Basic Analysis)	E
4578	5	14.103644	I-126 SB (Basic Analysis)	E
4578	6	13.681946	I-126 SB (Basic Analysis)	E
4578	7	13.452082	I-126 SB (Basic Analysis)	E
4578	8	13.097146	I-126 SB (Basic Analysis)	E
4578	9	13.312643	I-126 SB (Basic Analysis)	E
4578	10	13.759694	I-126 SB (Basic Analysis)	E
4579	1	10.718814	I-126 SB (Diverge Analysis)	E
4579	2	12.136134	I-126 SB (Diverge Analysis)	E
4579	3	11.029996	I-126 SB (Diverge Analysis)	E
4579	4	11.725582	I-126 SB (Diverge Analysis)	E
4579	5	10.632519	I-126 SB (Diverge Analysis)	E
4579	6	11.634057	I-126 SB (Diverge Analysis)	E
4579	7	10.263807	I-126 SB (Diverge Analysis)	E
4579	8	11.369944	I-126 SB (Diverge Analysis)	E
4579	9	11.474544	I-126 SB (Diverge Analysis)	E
4579	10	12.222428	I-126 SB (Diverge Analysis)	E
4586	1	21.72951	I-126 NB (Merge Analysis)	NW
4586	2	29.349044	I-126 NB (Merge Analysis)	NW
4586	3	24.926888	I-126 NB (Merge Analysis)	NW
4586	4	25.353794	I-126 NB (Merge Analysis)	NW
4586	5	25.91466	I-126 NB (Merge Analysis)	NW
4586	6	21.436564	I-126 NB (Merge Analysis)	NW
4586	7	25.029934	I-126 NB (Merge Analysis)	NW
4586	8	23.027893	I-126 NB (Merge Analysis)	NW
4586	9	24.535312	I-126 NB (Merge Analysis)	NW
4586	10	32.493427	I-126 NB (Merge Analysis)	NW

Existing PM

ID	Run	Density	Name (Type)	Direction
4587	1	37.191121	I-126 NB (Basic Analysis)	NW
4587	2	59.924429	I-126 NB (Basic Analysis)	NW
4587	3	52.313592	I-126 NB (Basic Analysis)	NW
4587	4	51.974319	I-126 NB (Basic Analysis)	NW
4587	5	54.686523	I-126 NB (Basic Analysis)	NW
4587	6	27.457345	I-126 NB (Basic Analysis)	NW
4587	7	50.069626	I-126 NB (Basic Analysis)	NW
4587	8	36.966923	I-126 NB (Basic Analysis)	NW
4587	9	49.49425	I-126 NB (Basic Analysis)	NW
4587	10	65.614701	I-126 NB (Basic Analysis)	NW
4588	1	24.498279	I-126 NB (Diverge Analysis)	NW
4588	2	34.314371	I-126 NB (Diverge Analysis)	NW
4588	3	30.486686	I-126 NB (Diverge Analysis)	NW
4588	4	30.168974	I-126 NB (Diverge Analysis)	NW
4588	5	30.002552	I-126 NB (Diverge Analysis)	NW
4588	6	22.634638	I-126 NB (Diverge Analysis)	NW
4588	7	29.550052	I-126 NB (Diverge Analysis)	NW
4588	8	27.030355	I-126 NB (Diverge Analysis)	NW
4588	9	30.576485	I-126 NB (Diverge Analysis)	NW
4588	10	36.490223	I-126 NB (Diverge Analysis)	NW
4589	1	24.498279	I-126 NB (Diverge Analysis)	NW
4589	2	34.314371	I-126 NB (Diverge Analysis)	NW
4589	3	30.486686	I-126 NB (Diverge Analysis)	NW
4589	4	30.168974	I-126 NB (Diverge Analysis)	NW
4589	5	30.002552	I-126 NB (Diverge Analysis)	NW
4589	6	22.634638	I-126 NB (Diverge Analysis)	NW
4589	7	29.550052	I-126 NB (Diverge Analysis)	NW
4589	8	27.030355	I-126 NB (Diverge Analysis)	NW
4589	9	30.576485	I-126 NB (Diverge Analysis)	NW
4589	10	36.490223	I-126 NB (Diverge Analysis)	NW
4593	1	12.899649	I-126 SB (Merge Analysis)	SE
4593	2	13.569289	I-126 SB (Merge Analysis)	SE
4593	3	14.423209	I-126 SB (Merge Analysis)	SE
4593	4	12.040538	I-126 SB (Merge Analysis)	SE
4593	5	13.862581	I-126 SB (Merge Analysis)	SE
4593	6	12.492155	I-126 SB (Merge Analysis)	SE
4593	7	13.361648	I-126 SB (Merge Analysis)	SE
4593	8	13.224087	I-126 SB (Merge Analysis)	SE
4593	9	13.457682	I-126 SB (Merge Analysis)	SE
4593	10	13.590053	I-126 SB (Merge Analysis)	SE
4594	1	16.03492	I-126 SB (Basic Analysis)	SE
4594	2	15.557133	I-126 SB (Basic Analysis)	SE
4594	3	15.263232	I-126 SB (Basic Analysis)	SE
4594	4	15.288378	I-126 SB (Basic Analysis)	SE
4594	5	15.381107	I-126 SB (Basic Analysis)	SE
4594	6	15.550061	I-126 SB (Basic Analysis)	SE
4594	7	15.538273	I-126 SB (Basic Analysis)	SE
4594	8	14.418461	I-126 SB (Basic Analysis)	SE
4594	9	15.337886	I-126 SB (Basic Analysis)	SE
4594	10	15.002335	I-126 SB (Basic Analysis)	SE
4599	1	57.218862	I-126 NB (Basic Analysis)	NW
4599	2	71.618537	I-126 NB (Basic Analysis)	NW
4599	3	63.653318	I-126 NB (Basic Analysis)	NW
4599	4	61.984534	I-126 NB (Basic Analysis)	NW
4599	5	63.18793	I-126 NB (Basic Analysis)	NW
4599	6	51.842938	I-126 NB (Basic Analysis)	NW
4599	7	64.565845	I-126 NB (Basic Analysis)	NW
4599	8	62.971204	I-126 NB (Basic Analysis)	NW
4599	9	63.767384	I-126 NB (Basic Analysis)	NW
4599	10	74.740521	I-126 NB (Basic Analysis)	NW
4601	1	70.130305	I-126 NB (Basic Analysis)	NW
4601	2	81.990589	I-126 NB (Basic Analysis)	NW
4601	3	74.596252	I-126 NB (Basic Analysis)	NW
4601	4	74.487683	I-126 NB (Basic Analysis)	NW

Existing PM

ID	Run	Density	Name (Type)	Direction
4601	5	73.55899	I-126 NB (Basic Analysis)	NW
4601	6	68.359479	I-126 NB (Basic Analysis)	NW
4601	7	73.911101	I-126 NB (Basic Analysis)	NW
4601	8	77.678692	I-126 NB (Basic Analysis)	NW
4601	9	75.637914	I-126 NB (Basic Analysis)	NW
4601	10	84.192752	I-126 NB (Basic Analysis)	NW
4602	1	11.944374	WB EXPRESSWAY TO I-26 WB (Basic Anal	NW
4602	2	10.644394	WB EXPRESSWAY TO I-26 WB (Basic Anal	NW
4602	3	13.488905	WB EXPRESSWAY TO I-26 WB (Basic Anal	NW
4602	4	60.468395	WB EXPRESSWAY TO I-26 WB (Basic Anal	NW
4602	5	14.13246	WB EXPRESSWAY TO I-26 WB (Basic Anal	NW
4602	6	13.411679	WB EXPRESSWAY TO I-26 WB (Basic Anal	NW
4602	7	11.339433	WB EXPRESSWAY TO I-26 WB (Basic Anal	NW
4602	8	12.060214	WB EXPRESSWAY TO I-26 WB (Basic Anal	NW
4602	9	14.685917	WB EXPRESSWAY TO I-26 WB (Basic Anal	NW
4602	10	13.064159	WB EXPRESSWAY TO I-26 WB (Basic Anal	NW
4603	1	82.941324	I-126 NB (Basic Analysis)	NW
4603	2	97.585177	I-126 NB (Basic Analysis)	NW
4603	3	88.998754	I-126 NB (Basic Analysis)	NW
4603	4	97.673179	I-126 NB (Basic Analysis)	NW
4603	5	88.665606	I-126 NB (Basic Analysis)	NW
4603	6	87.284822	I-126 NB (Basic Analysis)	NW
4603	7	85.313172	I-126 NB (Basic Analysis)	NW
4603	8	89.294187	I-126 NB (Basic Analysis)	NW
4603	9	90.578589	I-126 NB (Basic Analysis)	NW
4603	10	98.387666	I-126 NB (Basic Analysis)	NW
4609	1	16.641731	I-126 SB (Basic Analysis)	SE
4609	2	15.888936	I-126 SB (Basic Analysis)	SE
4609	3	14.701927	I-126 SB (Basic Analysis)	SE
4609	4	15.395725	I-126 SB (Basic Analysis)	SE
4609	5	16.549697	I-126 SB (Basic Analysis)	SE
4609	6	15.178618	I-126 SB (Basic Analysis)	SE
4609	7	16.117843	I-126 SB (Basic Analysis)	SE
4609	8	15.173898	I-126 SB (Basic Analysis)	SE
4609	9	15.539677	I-126 SB (Basic Analysis)	SE
4609	10	15.565635	I-126 SB (Basic Analysis)	SE
4611	1	41.491988	I-26 EB (Diverge Analysis)	SE
4611	2	39.312521	I-26 EB (Diverge Analysis)	SE
4611	3	40.301055	I-26 EB (Diverge Analysis)	SE
4611	4	40.427188	I-26 EB (Diverge Analysis)	SE
4611	5	41.471454	I-26 EB (Diverge Analysis)	SE
4611	6	40.975721	I-26 EB (Diverge Analysis)	SE
4611	7	40.207188	I-26 EB (Diverge Analysis)	SE
4611	8	41.398121	I-26 EB (Diverge Analysis)	SE
4611	9	40.949321	I-26 EB (Diverge Analysis)	SE
4611	10	39.949055	I-26 EB (Diverge Analysis)	SE
4619	1	106.422792	I-26 WB (Basic Analysis)	NW
4619	2	130.395085	I-26 WB (Basic Analysis)	NW
4619	3	123.476162	I-26 WB (Basic Analysis)	NW
4619	4	129.219755	I-26 WB (Basic Analysis)	NW
4619	5	122.056895	I-26 WB (Basic Analysis)	NW
4619	6	116.379831	I-26 WB (Basic Analysis)	NW
4619	7	114.894037	I-26 WB (Basic Analysis)	NW
4619	8	119.972348	I-26 WB (Basic Analysis)	NW
4619	9	115.404086	I-26 WB (Basic Analysis)	NW
4619	10	134.741587	I-26 WB (Basic Analysis)	NW
4624	1	34.694276	I-26 EB (Weaving Analysis)	SE
4624	2	37.054888	I-26 EB (Weaving Analysis)	SE
4624	3	35.461694	I-26 EB (Weaving Analysis)	SE
4624	4	53.29321	I-26 EB (Weaving Analysis)	SE
4624	5	32.599197	I-26 EB (Weaving Analysis)	SE
4624	6	32.380352	I-26 EB (Weaving Analysis)	SE
4624	7	30.168555	I-26 EB (Weaving Analysis)	SE
4624	8	31.860959	I-26 EB (Weaving Analysis)	SE

Existing PM

ID	Run	Density	Name (Type)	Direction
4624	9	47.013808	I-26 EB (Weaving Analysis)	SE
4624	10	34.764307	I-26 EB (Weaving Analysis)	SE
4639	1	29.257692	I-26 EB (Basic Analysis)	SE
4639	2	29.195574	I-26 EB (Basic Analysis)	SE
4639	3	28.407915	I-26 EB (Basic Analysis)	SE
4639	4	29.481318	I-26 EB (Basic Analysis)	SE
4639	5	29.543436	I-26 EB (Basic Analysis)	SE
4639	6	28.166896	I-26 EB (Basic Analysis)	SE
4639	7	28.0849	I-26 EB (Basic Analysis)	SE
4639	8	28.653903	I-26 EB (Basic Analysis)	SE
4639	9	28.711052	I-26 EB (Basic Analysis)	SE
4639	10	27.652557	I-26 EB (Basic Analysis)	SE
4641	1	33.186265	I-26 EB (Basic Analysis)	SE
4641	2	33.749079	I-26 EB (Basic Analysis)	SE
4641	3	34.286132	I-26 EB (Basic Analysis)	SE
4641	4	34.502141	I-26 EB (Basic Analysis)	SE
4641	5	34.549704	I-26 EB (Basic Analysis)	SE
4641	6	34.169209	I-26 EB (Basic Analysis)	SE
4641	7	33.798623	I-26 EB (Basic Analysis)	SE
4641	8	34.187045	I-26 EB (Basic Analysis)	SE
4641	9	34.890563	I-26 EB (Basic Analysis)	SE
4641	10	33.035652	I-26 EB (Basic Analysis)	SE
4643	1	88.401838	I-26 WB (Weaving Analysis)	NW
4643	2	100.80749	I-26 WB (Weaving Analysis)	NW
4643	3	94.319967	I-26 WB (Weaving Analysis)	NW
4643	4	104.035236	I-26 WB (Weaving Analysis)	NW
4643	5	97.042378	I-26 WB (Weaving Analysis)	NW
4643	6	95.113558	I-26 WB (Weaving Analysis)	NW
4643	7	89.038846	I-26 WB (Weaving Analysis)	NW
4643	8	93.067302	I-26 WB (Weaving Analysis)	NW
4643	9	99.362655	I-26 WB (Weaving Analysis)	NW
4643	10	103.262997	I-26 WB (Weaving Analysis)	NW
4646	1	104.677156	I-26 WB (Basic Analysis)	NW
4646	2	122.129346	I-26 WB (Basic Analysis)	NW
4646	3	114.651441	I-26 WB (Basic Analysis)	NW
4646	4	133.230379	I-26 WB (Basic Analysis)	NW
4646	5	117.127584	I-26 WB (Basic Analysis)	NW
4646	6	114.336584	I-26 WB (Basic Analysis)	NW
4646	7	112.227027	I-26 WB (Basic Analysis)	NW
4646	8	118.036178	I-26 WB (Basic Analysis)	NW
4646	9	124.857375	I-26 WB (Basic Analysis)	NW
4646	10	127.8193	I-26 WB (Basic Analysis)	NW
4649	1	37.699786	I-26 EB (Basic Analysis)	SE
4649	2	36.224577	I-26 EB (Basic Analysis)	SE
4649	3	36.139057	I-26 EB (Basic Analysis)	SE
4649	4	36.428873	I-26 EB (Basic Analysis)	SE
4649	5	36.12718	I-26 EB (Basic Analysis)	SE
4649	6	34.528443	I-26 EB (Basic Analysis)	SE
4649	7	35.309994	I-26 EB (Basic Analysis)	SE
4649	8	35.559426	I-26 EB (Basic Analysis)	SE
4649	9	36.445502	I-26 EB (Basic Analysis)	SE
4649	10	36.837466	I-26 EB (Basic Analysis)	SE
4650	1	31.641365	I-26 EB (Weaving Analysis)	SE
4650	2	31.759732	I-26 EB (Weaving Analysis)	SE
4650	3	31.90551	I-26 EB (Weaving Analysis)	SE
4650	4	32.052534	I-26 EB (Weaving Analysis)	SE
4650	5	31.263837	I-26 EB (Weaving Analysis)	SE
4650	6	30.551143	I-26 EB (Weaving Analysis)	SE
4650	7	30.890046	I-26 EB (Weaving Analysis)	SE
4650	8	30.998445	I-26 EB (Weaving Analysis)	SE
4650	9	31.258853	I-26 EB (Weaving Analysis)	SE
4650	10	31.054514	I-26 EB (Weaving Analysis)	SE
4651	1	94.62145	I-26 WB (Weaving Analysis)	NW
4651	2	105.573755	I-26 WB (Weaving Analysis)	NW

Existing PM

ID	Run	Density	Name (Type)	Direction
4651	3	101.507961	I-26 WB (Weaving Analysis)	NW
4651	4	113.409728	I-26 WB (Weaving Analysis)	NW
4651	5	103.805891	I-26 WB (Weaving Analysis)	NW
4651	6	99.176537	I-26 WB (Weaving Analysis)	NW
4651	7	101.574948	I-26 WB (Weaving Analysis)	NW
4651	8	104.073838	I-26 WB (Weaving Analysis)	NW
4651	9	109.670129	I-26 WB (Weaving Analysis)	NW
4651	10	112.28115	I-26 WB (Weaving Analysis)	NW
4654	1	77.521298	I-26 WB (Basic Analysis)	NW
4654	2	81.68373	I-26 WB (Basic Analysis)	NW
4654	3	79.953303	I-26 WB (Basic Analysis)	NW
4654	4	88.144622	I-26 WB (Basic Analysis)	NW
4654	5	83.380303	I-26 WB (Basic Analysis)	NW
4654	6	80.933251	I-26 WB (Basic Analysis)	NW
4654	7	87.616089	I-26 WB (Basic Analysis)	NW
4654	8	84.450535	I-26 WB (Basic Analysis)	NW
4654	9	84.222946	I-26 WB (Basic Analysis)	NW
4654	10	89.365327	I-26 WB (Basic Analysis)	NW
4659	1	65.630225	I-26 WB (Basic Analysis)	NW
4659	2	65.307735	I-26 WB (Basic Analysis)	NW
4659	3	68.078525	I-26 WB (Basic Analysis)	NW
4659	4	72.205095	I-26 WB (Basic Analysis)	NW
4659	5	65.209012	I-26 WB (Basic Analysis)	NW
4659	6	72.850077	I-26 WB (Basic Analysis)	NW
4659	7	69.131557	I-26 WB (Basic Analysis)	NW
4659	8	68.499738	I-26 WB (Basic Analysis)	NW
4659	9	69.895005	I-26 WB (Basic Analysis)	NW
4659	10	68.407597	I-26 WB (Basic Analysis)	NW
4665	1	38.261958	I-26 EB (Basic Analysis)	SE
4665	2	40.892131	I-26 EB (Basic Analysis)	SE
4665	3	37.313481	I-26 EB (Basic Analysis)	SE
4665	4	39.88984	I-26 EB (Basic Analysis)	SE
4665	5	40.865224	I-26 EB (Basic Analysis)	SE
4665	6	43.46849	I-26 EB (Basic Analysis)	SE
4665	7	43.811556	I-26 EB (Basic Analysis)	SE
4665	8	42.52674	I-26 EB (Basic Analysis)	SE
4665	9	41.046847	I-26 EB (Basic Analysis)	SE
4665	10	44.154623	I-26 EB (Basic Analysis)	SE
4667	1	30.343125	I-26 EB (Merge Analysis)	SE
4667	2	29.231942	I-26 EB (Merge Analysis)	SE
4667	3	29.588359	I-26 EB (Merge Analysis)	SE
4667	4	28.997507	I-26 EB (Merge Analysis)	SE
4667	5	27.133463	I-26 EB (Merge Analysis)	SE
4667	6	28.747824	I-26 EB (Merge Analysis)	SE
4667	7	29.864726	I-26 EB (Merge Analysis)	SE
4667	8	30.41174	I-26 EB (Merge Analysis)	SE
4667	9	29.514026	I-26 EB (Merge Analysis)	SE
4667	10	31.25037	I-26 EB (Merge Analysis)	SE
4668	1	30.343125	I-26 EB (Merge Analysis)	SE
4668	2	29.231942	I-26 EB (Merge Analysis)	SE
4668	3	29.588359	I-26 EB (Merge Analysis)	SE
4668	4	28.997507	I-26 EB (Merge Analysis)	SE
4668	5	27.133463	I-26 EB (Merge Analysis)	SE
4668	6	28.747824	I-26 EB (Merge Analysis)	SE
4668	7	29.864726	I-26 EB (Merge Analysis)	SE
4668	8	30.41174	I-26 EB (Merge Analysis)	SE
4668	9	29.514026	I-26 EB (Merge Analysis)	SE
4668	10	31.25037	I-26 EB (Merge Analysis)	SE
4669	1	34.734285	I-26 EB (Basic Analysis)	SE
4669	2	34.785626	I-26 EB (Basic Analysis)	SE
4669	3	34.116475	I-26 EB (Basic Analysis)	SE
4669	4	34.23456	I-26 EB (Basic Analysis)	SE
4669	5	34.725728	I-26 EB (Basic Analysis)	SE
4669	6	35.028643	I-26 EB (Basic Analysis)	SE

Existing PM

ID	Run	Density	Name (Type)	Direction
4669	7	34.599085	I-26 EB (Basic Analysis)	SE
4669	8	35.365786	I-26 EB (Basic Analysis)	SE
4669	9	35.069716	I-26 EB (Basic Analysis)	SE
4669	10	33.911108	I-26 EB (Basic Analysis)	SE
4670	1	28.537018	I-26 EB (Diverge Analysis)	SE
4670	2	29.34139	I-26 EB (Diverge Analysis)	SE
4670	3	28.509752	I-26 EB (Diverge Analysis)	SE
4670	4	28.898304	I-26 EB (Diverge Analysis)	SE
4670	5	29.166428	I-26 EB (Diverge Analysis)	SE
4670	6	28.418862	I-26 EB (Diverge Analysis)	SE
4670	7	29.789021	I-26 EB (Diverge Analysis)	SE
4670	8	28.82332	I-26 EB (Diverge Analysis)	SE
4670	9	30.352535	I-26 EB (Diverge Analysis)	SE
4670	10	29.411829	I-26 EB (Diverge Analysis)	SE
4675	1	37.165325	I-26 WB (Merge Analysis)	NW
4675	2	36.668614	I-26 WB (Merge Analysis)	NW
4675	3	36.373325	I-26 WB (Merge Analysis)	NW
4675	4	37.929947	I-26 WB (Merge Analysis)	NW
4675	5	34.891014	I-26 WB (Merge Analysis)	NW
4675	6	38.942924	I-26 WB (Merge Analysis)	NW
4675	7	36.21688	I-26 WB (Merge Analysis)	NW
4675	8	36.232525	I-26 WB (Merge Analysis)	NW
4675	9	36.813325	I-26 WB (Merge Analysis)	NW
4675	10	36.230569	I-26 WB (Merge Analysis)	NW
4676	1	48.797386	I-26 WB (Basic Analysis)	NW
4676	2	49.000719	I-26 WB (Basic Analysis)	NW
4676	3	48.75589	I-26 WB (Basic Analysis)	NW
4676	4	49.430623	I-26 WB (Basic Analysis)	NW
4676	5	48.177429	I-26 WB (Basic Analysis)	NW
4676	6	53.039988	I-26 WB (Basic Analysis)	NW
4676	7	49.642255	I-26 WB (Basic Analysis)	NW
4676	8	48.261252	I-26 WB (Basic Analysis)	NW
4676	9	49.149276	I-26 WB (Basic Analysis)	NW
4676	10	48.657958	I-26 WB (Basic Analysis)	NW
4677	1	48.797386	I-26 WB (Basic Analysis)	NW
4677	2	49.000719	I-26 WB (Basic Analysis)	NW
4677	3	48.75589	I-26 WB (Basic Analysis)	NW
4677	4	49.430623	I-26 WB (Basic Analysis)	NW
4677	5	48.177429	I-26 WB (Basic Analysis)	NW
4677	6	53.039988	I-26 WB (Basic Analysis)	NW
4677	7	49.642255	I-26 WB (Basic Analysis)	NW
4677	8	48.261252	I-26 WB (Basic Analysis)	NW
4677	9	49.149276	I-26 WB (Basic Analysis)	NW
4677	10	48.657958	I-26 WB (Basic Analysis)	NW
4687	1	27.530655	I-26 EB (Basic Analysis)	SE
4687	2	27.93299	I-26 EB (Basic Analysis)	SE
4687	3	27.397645	I-26 EB (Basic Analysis)	SE
4687	4	27.189455	I-26 EB (Basic Analysis)	SE
4687	5	27.811546	I-26 EB (Basic Analysis)	SE
4687	6	27.369556	I-26 EB (Basic Analysis)	SE
4687	7	27.880117	I-26 EB (Basic Analysis)	SE
4687	8	27.872682	I-26 EB (Basic Analysis)	SE
4687	9	27.549656	I-26 EB (Basic Analysis)	SE
4687	10	27.835505	I-26 EB (Basic Analysis)	SE
4689	1	39.869395	I-26 WB (Basic Analysis)	NW
4689	2	36.85636	I-26 WB (Basic Analysis)	NW
4689	3	39.665325	I-26 WB (Basic Analysis)	NW
4689	4	39.263648	I-26 WB (Basic Analysis)	NW
4689	5	39.915565	I-26 WB (Basic Analysis)	NW
4689	6	65.160241	I-26 WB (Basic Analysis)	NW
4689	7	65.078982	I-26 WB (Basic Analysis)	NW
4689	8	41.003323	I-26 WB (Basic Analysis)	NW
4689	9	39.311665	I-26 WB (Basic Analysis)	NW
4689	10	45.292489	I-26 WB (Basic Analysis)	NW

Existing PM

ID	Run	Density	Name (Type)	Direction
4700	1	36.16395	I-26 WB (Merge Analysis)	NW
4700	2	33.940249	I-26 WB (Merge Analysis)	NW
4700	3	36.22588	I-26 WB (Merge Analysis)	NW
4700	4	36.246043	I-26 WB (Merge Analysis)	NW
4700	5	36.297891	I-26 WB (Merge Analysis)	NW
4700	6	42.109182	I-26 WB (Merge Analysis)	NW
4700	7	43.602692	I-26 WB (Merge Analysis)	NW
4700	8	37.720829	I-26 WB (Merge Analysis)	NW
4700	9	35.327182	I-26 WB (Merge Analysis)	NW
4700	10	39.54847	I-26 WB (Merge Analysis)	NW
4701	1	41.993015	I-26 WB (Basic Analysis)	NW
4701	2	42.423712	I-26 WB (Basic Analysis)	NW
4701	3	42.694635	I-26 WB (Basic Analysis)	NW
4701	4	41.124673	I-26 WB (Basic Analysis)	NW
4701	5	43.333735	I-26 WB (Basic Analysis)	NW
4701	6	43.604657	I-26 WB (Basic Analysis)	NW
4701	7	44.681402	I-26 WB (Basic Analysis)	NW
4701	8	45.438596	I-26 WB (Basic Analysis)	NW
4701	9	43.347628	I-26 WB (Basic Analysis)	NW
4701	10	44.125662	I-26 WB (Basic Analysis)	NW
4702	1	31.445126	I-26 WB (Diverge Analysis)	NW
4702	2	30.348924	I-26 WB (Diverge Analysis)	NW
4702	3	31.335506	I-26 WB (Diverge Analysis)	NW
4702	4	31.125798	I-26 WB (Diverge Analysis)	NW
4702	5	31.683431	I-26 WB (Diverge Analysis)	NW
4702	6	34.779806	I-26 WB (Diverge Analysis)	NW
4702	7	35.839469	I-26 WB (Diverge Analysis)	NW
4702	8	32.965511	I-26 WB (Diverge Analysis)	NW
4702	9	31.327563	I-26 WB (Diverge Analysis)	NW
4702	10	34.083956	I-26 WB (Diverge Analysis)	NW
4703	1	31.445126	I-26 WB (Diverge Analysis)	NW
4703	2	30.348924	I-26 WB (Diverge Analysis)	NW
4703	3	31.335506	I-26 WB (Diverge Analysis)	NW
4703	4	31.125798	I-26 WB (Diverge Analysis)	NW
4703	5	31.683431	I-26 WB (Diverge Analysis)	NW
4703	6	34.779806	I-26 WB (Diverge Analysis)	NW
4703	7	35.839469	I-26 WB (Diverge Analysis)	NW
4703	8	32.965511	I-26 WB (Diverge Analysis)	NW
4703	9	31.327563	I-26 WB (Diverge Analysis)	NW
4703	10	34.083956	I-26 WB (Diverge Analysis)	NW
4705	1	27.892867	I-26 EB (Merge Analysis)	SE
4705	2	26.409875	I-26 EB (Merge Analysis)	SE
4705	3	26.227318	I-26 EB (Merge Analysis)	SE
4705	4	25.080141	I-26 EB (Merge Analysis)	SE
4705	5	26.590178	I-26 EB (Merge Analysis)	SE
4705	6	28.046125	I-26 EB (Merge Analysis)	SE
4705	7	28.300802	I-26 EB (Merge Analysis)	SE
4705	8	28.521674	I-26 EB (Merge Analysis)	SE
4705	9	28.134022	I-26 EB (Merge Analysis)	SE
4705	10	27.985272	I-26 EB (Merge Analysis)	SE
4706	1	27.892867	I-26 EB (Merge Analysis)	SE
4706	2	26.409875	I-26 EB (Merge Analysis)	SE
4706	3	26.227318	I-26 EB (Merge Analysis)	SE
4706	4	25.080141	I-26 EB (Merge Analysis)	SE
4706	5	26.590178	I-26 EB (Merge Analysis)	SE
4706	6	28.046125	I-26 EB (Merge Analysis)	SE
4706	7	28.300802	I-26 EB (Merge Analysis)	SE
4706	8	28.521674	I-26 EB (Merge Analysis)	SE
4706	9	28.134022	I-26 EB (Merge Analysis)	SE
4706	10	27.985272	I-26 EB (Merge Analysis)	SE
4707	1	28.315458	I-26 EB (Diverge Analysis)	SE
4707	2	28.315458	I-26 EB (Diverge Analysis)	SE
4707	3	27.403192	I-26 EB (Diverge Analysis)	SE
4707	4	26.913325	I-26 EB (Diverge Analysis)	SE

Existing PM

ID	Run	Density	Name (Type)	Direction
4707	5	27.344525	I-26 EB (Diverge Analysis)	SE
4707	6	28.060258	I-26 EB (Diverge Analysis)	SE
4707	7	29.037058	I-26 EB (Diverge Analysis)	SE
4707	8	29.667725	I-26 EB (Diverge Analysis)	SE
4707	9	28.453325	I-26 EB (Diverge Analysis)	SE
4707	10	28.095458	I-26 EB (Diverge Analysis)	SE
4712	1	34.622508	I-26 WB (Basic Analysis)	NW
4712	2	33.505905	I-26 WB (Basic Analysis)	NW
4712	3	34.54685	I-26 WB (Basic Analysis)	NW
4712	4	34.679903	I-26 WB (Basic Analysis)	NW
4712	5	34.257264	I-26 WB (Basic Analysis)	NW
4712	6	35.042539	I-26 WB (Basic Analysis)	NW
4712	7	34.184216	I-26 WB (Basic Analysis)	NW
4712	8	35.916515	I-26 WB (Basic Analysis)	NW
4712	9	33.65983	I-26 WB (Basic Analysis)	NW
4712	10	34.752952	I-26 WB (Basic Analysis)	NW
4714	1	24.098414	I-26 EB (Basic Analysis)	SE
4714	2	24.301343	I-26 EB (Basic Analysis)	SE
4714	3	24.373267	I-26 EB (Basic Analysis)	SE
4714	4	23.710538	I-26 EB (Basic Analysis)	SE
4714	5	23.176245	I-26 EB (Basic Analysis)	SE
4714	6	23.334221	I-26 EB (Basic Analysis)	SE
4714	7	24.699494	I-26 EB (Basic Analysis)	SE
4714	8	24.483722	I-26 EB (Basic Analysis)	SE
4714	9	22.463426	I-26 EB (Basic Analysis)	SE
4714	10	23.851818	I-26 EB (Basic Analysis)	SE
4718	1	23.543743	I-26 EB (Merge Analysis)	SE
4718	2	24.282909	I-26 EB (Merge Analysis)	SE
4718	3	23.304659	I-26 EB (Merge Analysis)	SE
4718	4	22.896225	I-26 EB (Merge Analysis)	SE
4718	5	23.679223	I-26 EB (Merge Analysis)	SE
4718	6	25.980402	I-26 EB (Merge Analysis)	SE
4718	7	23.890414	I-26 EB (Merge Analysis)	SE
4718	8	25.324914	I-26 EB (Merge Analysis)	SE
4718	9	23.489949	I-26 EB (Merge Analysis)	SE
4718	10	25.0679	I-26 EB (Merge Analysis)	SE
4719	1	23.543743	I-26 EB (Merge Analysis)	SE
4719	2	24.282909	I-26 EB (Merge Analysis)	SE
4719	3	23.304659	I-26 EB (Merge Analysis)	SE
4719	4	22.896225	I-26 EB (Merge Analysis)	SE
4719	5	23.679223	I-26 EB (Merge Analysis)	SE
4719	6	25.980402	I-26 EB (Merge Analysis)	SE
4719	7	23.890414	I-26 EB (Merge Analysis)	SE
4719	8	25.324914	I-26 EB (Merge Analysis)	SE
4719	9	23.489949	I-26 EB (Merge Analysis)	SE
4719	10	25.0679	I-26 EB (Merge Analysis)	SE
4720	1	23.718926	I-26 EB (Diverge Analysis)	SE
4720	2	25.115193	I-26 EB (Diverge Analysis)	SE
4720	3	25.018393	I-26 EB (Diverge Analysis)	SE
4720	4	23.979993	I-26 EB (Diverge Analysis)	SE
4720	5	24.358393	I-26 EB (Diverge Analysis)	SE
4720	6	23.812793	I-26 EB (Diverge Analysis)	SE
4720	7	25.654926	I-26 EB (Diverge Analysis)	SE
4720	8	26.168259	I-26 EB (Diverge Analysis)	SE
4720	9	24.094393	I-26 EB (Diverge Analysis)	SE
4720	10	25.376259	I-26 EB (Diverge Analysis)	SE
4725	1	35.888901	I-26 WB (Merge Analysis)	NW
4725	2	33.109862	I-26 WB (Merge Analysis)	NW
4725	3	36.202361	I-26 WB (Merge Analysis)	NW
4725	4	38.143946	I-26 WB (Merge Analysis)	NW
4725	5	34.291187	I-26 WB (Merge Analysis)	NW
4725	6	35.217533	I-26 WB (Merge Analysis)	NW
4725	7	34.047904	I-26 WB (Merge Analysis)	NW
4725	8	36.050309	I-26 WB (Merge Analysis)	NW

ID	Run	Density	Name (Type)	Direction
4725	9	34.737986	I-26 WB (Merge Analysis)	NW
4725	10	34.7567	I-26 WB (Merge Analysis)	NW
4726	1		I-26 WB (Basic Analysis)	NW
4726	2		I-26 WB (Basic Analysis)	NW
4726	3		I-26 WB (Basic Analysis)	NW
4726	4		I-26 WB (Basic Analysis)	NW
4726	5		I-26 WB (Basic Analysis)	NW
4726	6		I-26 WB (Basic Analysis)	NW
4726	7		I-26 WB (Basic Analysis)	NW
4726	8		I-26 WB (Basic Analysis)	NW
4726	9		I-26 WB (Basic Analysis)	NW
4726	10		I-26 WB (Basic Analysis)	NW
4727	1	35.432683	I-26 WB (Diverge Analysis)	NW
4727	2	34.648711	I-26 WB (Diverge Analysis)	NW
4727	3	37.132895	I-26 WB (Diverge Analysis)	NW
4727	4	40.848348	I-26 WB (Diverge Analysis)	NW
4727	5	35.367754	I-26 WB (Diverge Analysis)	NW
4727	6	35.82467	I-26 WB (Diverge Analysis)	NW
4727	7	34.340893	I-26 WB (Diverge Analysis)	NW
4727	8	36.16375	I-26 WB (Diverge Analysis)	NW
4727	9	35.038293	I-26 WB (Diverge Analysis)	NW
4727	10	36.688002	I-26 WB (Diverge Analysis)	NW
4728	1	40.761388	I-26 WB (Basic Analysis)	NW
4728	2	37.947256	I-26 WB (Basic Analysis)	NW
4728	3	45.229184	I-26 WB (Basic Analysis)	NW
4728	4	46.979554	I-26 WB (Basic Analysis)	NW
4728	5	37.038224	I-26 WB (Basic Analysis)	NW
4728	6	39.359157	I-26 WB (Basic Analysis)	NW
4728	7	40.780729	I-26 WB (Basic Analysis)	NW
4728	8	37.792527	I-26 WB (Basic Analysis)	NW
4728	9	35.858417	I-26 WB (Basic Analysis)	NW
4728	10	37.270317	I-26 WB (Basic Analysis)	NW
4729	1	30.560858	I-26 WB (Diverge Analysis)	NW
4729	2	26.703255	I-26 WB (Diverge Analysis)	NW
4729	3	36.339542	I-26 WB (Diverge Analysis)	NW
4729	4	37.060775	I-26 WB (Diverge Analysis)	NW
4729	5	29.396298	I-26 WB (Diverge Analysis)	NW
4729	6	31.767323	I-26 WB (Diverge Analysis)	NW
4729	7	27.755329	I-26 WB (Diverge Analysis)	NW
4729	8	26.910582	I-26 WB (Diverge Analysis)	NW
4729	9	27.060563	I-26 WB (Diverge Analysis)	NW
4729	10	30.373381	I-26 WB (Diverge Analysis)	NW
4730	1	30.560858	I-26 WB (Diverge Analysis)	NW
4730	2	26.703255	I-26 WB (Diverge Analysis)	NW
4730	3	36.339542	I-26 WB (Diverge Analysis)	NW
4730	4	37.060775	I-26 WB (Diverge Analysis)	NW
4730	5	29.396298	I-26 WB (Diverge Analysis)	NW
4730	6	31.767323	I-26 WB (Diverge Analysis)	NW
4730	7	27.755329	I-26 WB (Diverge Analysis)	NW
4730	8	26.910582	I-26 WB (Diverge Analysis)	NW
4730	9	27.060563	I-26 WB (Diverge Analysis)	NW
4730	10	30.373381	I-26 WB (Diverge Analysis)	NW
4732	1	51.511567	I-26 WB (Basic Analysis)	NW
4732	2	42.90605	I-26 WB (Basic Analysis)	NW
4732	3	58.867055	I-26 WB (Basic Analysis)	NW
4732	4	70.178071	I-26 WB (Basic Analysis)	NW
4732	5	50.776596	I-26 WB (Basic Analysis)	NW
4732	6	58.239147	I-26 WB (Basic Analysis)	NW
4732	7	45.006792	I-26 WB (Basic Analysis)	NW

Existing PM

ID	Run	Density	Name (Type)	Direction
4732	8	38.768226	I-26 WB (Basic Analysis)	NW
4732	9	52.119219	I-26 WB (Basic Analysis)	NW
4732	10	48.34888	I-26 WB (Basic Analysis)	NW
4733	1	21.438635	I-26 EB (Basic Analysis)	SE
4733	2	20.972267	I-26 EB (Basic Analysis)	SE
4733	3	21.55815	I-26 EB (Basic Analysis)	SE
4733	4	21.468513	I-26 EB (Basic Analysis)	SE
4733	5	20.881332	I-26 EB (Basic Analysis)	SE
4733	6	20.54617	I-26 EB (Basic Analysis)	SE
4733	7	22.199893	I-26 EB (Basic Analysis)	SE
4733	8	21.230783	I-26 EB (Basic Analysis)	SE
4733	9	20.859247	I-26 EB (Basic Analysis)	SE
4733	10	20.859247	I-26 EB (Basic Analysis)	SE
4736	1	22.763012	I-26 EB (Basic Analysis)	SE
4736	2	22.948935	I-26 EB (Basic Analysis)	SE
4736	3	20.411337	I-26 EB (Basic Analysis)	SE
4736	4	23.903676	I-26 EB (Basic Analysis)	SE
4736	5	23.888601	I-26 EB (Basic Analysis)	SE
4736	6	24.767966	I-26 EB (Basic Analysis)	SE
4736	7	19.587246	I-26 EB (Basic Analysis)	SE
4736	8	22.290667	I-26 EB (Basic Analysis)	SE
4736	9	24.39612	I-26 EB (Basic Analysis)	SE
4736	10	24.41622	I-26 EB (Basic Analysis)	SE
4737	1	17.840443	I-26 EB (Diverge Analysis)	SE
4737	2	18.996699	I-26 EB (Diverge Analysis)	SE
4737	3	17.632909	I-26 EB (Diverge Analysis)	SE
4737	4	17.383375	I-26 EB (Diverge Analysis)	SE
4737	5	18.060329	I-26 EB (Diverge Analysis)	SE
4737	6	17.991151	I-26 EB (Diverge Analysis)	SE
4737	7	19.574827	I-26 EB (Diverge Analysis)	SE
4737	8	18.974463	I-26 EB (Diverge Analysis)	SE
4737	9	17.104194	I-26 EB (Diverge Analysis)	SE
4737	10	17.408082	I-26 EB (Diverge Analysis)	SE
4739	1	54.498811	I-26 WB (Weaving Analysis)	NW
4739	2	51.197528	I-26 WB (Weaving Analysis)	NW
4739	3	62.711601	I-26 WB (Weaving Analysis)	NW
4739	4	69.688537	I-26 WB (Weaving Analysis)	NW
4739	5	58.306346	I-26 WB (Weaving Analysis)	NW
4739	6	55.615546	I-26 WB (Weaving Analysis)	NW
4739	7	47.968568	I-26 WB (Weaving Analysis)	NW
4739	8	40.840606	I-26 WB (Weaving Analysis)	NW
4739	9	60.116521	I-26 WB (Weaving Analysis)	NW
4739	10	48.647118	I-26 WB (Weaving Analysis)	NW
4741	1	79.462067	I-26 WB (Basic Analysis)	NW
4741	2	78.112102	I-26 WB (Basic Analysis)	NW
4741	3	90.568974	I-26 WB (Basic Analysis)	NW
4741	4	98.806191	I-26 WB (Basic Analysis)	NW
4741	5	85.743047	I-26 WB (Basic Analysis)	NW
4741	6	83.148203	I-26 WB (Basic Analysis)	NW
4741	7	71.063178	I-26 WB (Basic Analysis)	NW
4741	8	59.915855	I-26 WB (Basic Analysis)	NW
4741	9	83.819144	I-26 WB (Basic Analysis)	NW
4741	10	77.020812	I-26 WB (Basic Analysis)	NW
4742	1	74.549516	I-26 WB (Diverge Analysis)	NW
4742	2	74.876952	I-26 WB (Diverge Analysis)	NW
4742	3	81.861502	I-26 WB (Diverge Analysis)	NW
4742	4	82.96833	I-26 WB (Diverge Analysis)	NW

Existing PM

ID	Run	Density	Name (Type)	Direction
4742	5	77.081386	I-26 WB (Diverge Analysis)	NW
4742	6	79.168219	I-26 WB (Diverge Analysis)	NW
4742	7	68.625677	I-26 WB (Diverge Analysis)	NW
4742	8	58.943233	I-26 WB (Diverge Analysis)	NW
4742	9	74.946129	I-26 WB (Diverge Analysis)	NW
4742	10	74.284338	I-26 WB (Diverge Analysis)	NW
4745	1	17.501725	I-26 EB (Basic Analysis)	SE
4745	2	17.000692	I-26 EB (Basic Analysis)	SE
4745	3	19.674958	I-26 EB (Basic Analysis)	SE
4745	4	17.630115	I-26 EB (Basic Analysis)	SE
4745	5	18.531975	I-26 EB (Basic Analysis)	SE
4745	6	16.959982	I-26 EB (Basic Analysis)	SE
4745	7	19.095638	I-26 EB (Basic Analysis)	SE
4745	8	16.543498	I-26 EB (Basic Analysis)	SE
4745	9	19.067454	I-26 EB (Basic Analysis)	SE
4745	10	17.194842	I-26 EB (Basic Analysis)	SE
4748	1	18.998219	I-26 EB (Weaving Analysis)	SE
4748	2	17.002341	I-26 EB (Weaving Analysis)	SE
4748	3	18.626682	I-26 EB (Weaving Analysis)	SE
4748	4	16.596822	I-26 EB (Weaving Analysis)	SE
4748	5	19.797929	I-26 EB (Weaving Analysis)	SE
4748	6	19.111492	I-26 EB (Weaving Analysis)	SE
4748	7	16.705565	I-26 EB (Weaving Analysis)	SE
4748	8	19.27234	I-26 EB (Weaving Analysis)	SE
4748	9	19.526073	I-26 EB (Weaving Analysis)	SE
4748	10	19.686921	I-26 EB (Weaving Analysis)	SE
4753	1	131.845062	I-26 WB (Basic Analysis)	NW
4753	2	130.426494	I-26 WB (Basic Analysis)	NW
4753	3	134.911595	I-26 WB (Basic Analysis)	NW
4753	4	137.17392	I-26 WB (Basic Analysis)	NW
4753	5	128.533313	I-26 WB (Basic Analysis)	NW
4753	6	132.480518	I-26 WB (Basic Analysis)	NW
4753	7	139.378237	I-26 WB (Basic Analysis)	NW
4753	8	108.533617	I-26 WB (Basic Analysis)	NW
4753	9	129.891236	I-26 WB (Basic Analysis)	NW
4753	10	131.225428	I-26 WB (Basic Analysis)	NW
4755	1	18.464098	I-26 EB (Basic Analysis)	SE
4755	2	18.740056	I-26 EB (Basic Analysis)	SE
4755	3	19.325422	I-26 EB (Basic Analysis)	SE
4755	4	18.819499	I-26 EB (Basic Analysis)	SE
4755	5	17.908001	I-26 EB (Basic Analysis)	SE
4755	6	18.735875	I-26 EB (Basic Analysis)	SE
4755	7	19.994411	I-26 EB (Basic Analysis)	SE
4755	8	18.551903	I-26 EB (Basic Analysis)	SE
4755	9	19.325422	I-26 EB (Basic Analysis)	SE
4755	10	19.726815	I-26 EB (Basic Analysis)	SE
4756	1	17.075343	I-26 EB (Diverge Analysis)	SE
4756	2	16.949771	I-26 EB (Diverge Analysis)	SE
4756	3	17.227478	I-26 EB (Diverge Analysis)	SE
4756	4	17.232307	I-26 EB (Diverge Analysis)	SE
4756	5	13.808062	I-26 EB (Diverge Analysis)	SE
4756	6	15.256967	I-26 EB (Diverge Analysis)	SE
4756	7	17.543822	I-26 EB (Diverge Analysis)	SE
4756	8	16.167362	I-26 EB (Diverge Analysis)	SE
4756	9	15.199011	I-26 EB (Diverge Analysis)	SE
4756	10	15.529844	I-26 EB (Diverge Analysis)	SE
4760	1	93.788181	I-26 WB (Merge Analysis)	NW

Existing PM

ID	Run	Density	Name (Type)	Direction
4760	2	97.391963	I-26 WB (Merge Analysis)	NW
4760	3	95.355879	I-26 WB (Merge Analysis)	NW
4760	4	95.894843	I-26 WB (Merge Analysis)	NW
4760	5	95.060733	I-26 WB (Merge Analysis)	NW
4760	6	96.502246	I-26 WB (Merge Analysis)	NW
4760	7	97.537398	I-26 WB (Merge Analysis)	NW
4760	8	94.399862	I-26 WB (Merge Analysis)	NW
4760	9	95.257497	I-26 WB (Merge Analysis)	NW
4760	10	94.772003	I-26 WB (Merge Analysis)	NW
4761	1	93.788181	I-26 WB (Merge Analysis)	NW
4761	2	97.391963	I-26 WB (Merge Analysis)	NW
4761	3	95.355879	I-26 WB (Merge Analysis)	NW
4761	4	95.894843	I-26 WB (Merge Analysis)	NW
4761	5	95.060733	I-26 WB (Merge Analysis)	NW
4761	6	96.502246	I-26 WB (Merge Analysis)	NW
4761	7	97.537398	I-26 WB (Merge Analysis)	NW
4761	8	94.399862	I-26 WB (Merge Analysis)	NW
4761	9	95.257497	I-26 WB (Merge Analysis)	NW
4761	10	94.772003	I-26 WB (Merge Analysis)	NW
4764	1	35.688291	I-26 WB (Basic Analysis)	NW
4764	2	36.131981	I-26 WB (Basic Analysis)	NW
4764	3	36.098618	I-26 WB (Basic Analysis)	NW
4764	4	36.206941	I-26 WB (Basic Analysis)	NW
4764	5	35.911003	I-26 WB (Basic Analysis)	NW
4764	6	36.504613	I-26 WB (Basic Analysis)	NW
4764	7	36.261319	I-26 WB (Basic Analysis)	NW
4764	8	36.153863	I-26 WB (Basic Analysis)	NW
4764	9	35.888472	I-26 WB (Basic Analysis)	NW
4764	10	36.021276	I-26 WB (Basic Analysis)	NW
4768	1	27.208167	I-26 EB (Basic Analysis)	SE
4768	2	26.896101	I-26 EB (Basic Analysis)	SE
4768	3	27.627656	I-26 EB (Basic Analysis)	SE
4768	4	26.903913	I-26 EB (Basic Analysis)	SE
4768	5	27.485077	I-26 EB (Basic Analysis)	SE
4768	6	26.811899	I-26 EB (Basic Analysis)	SE
4768	7	27.781302	I-26 EB (Basic Analysis)	SE
4768	8	27.977266	I-26 EB (Basic Analysis)	SE
4768	9	27.224009	I-26 EB (Basic Analysis)	SE
4768	10	27.234643	I-26 EB (Basic Analysis)	SE
4769	1	25.91815	I-26 EB (Diverge Analysis)	SE
4769	2	25.571741	I-26 EB (Diverge Analysis)	SE
4769	3	24.266848	I-26 EB (Diverge Analysis)	SE
4769	4	26.321859	I-26 EB (Diverge Analysis)	SE
4769	5	28.204969	I-26 EB (Diverge Analysis)	SE
4769	6	28.186737	I-26 EB (Diverge Analysis)	SE
4769	7	24.027227	I-26 EB (Diverge Analysis)	SE
4769	8	27.809073	I-26 EB (Diverge Analysis)	SE
4769	9	24.764322	I-26 EB (Diverge Analysis)	SE
4769	10	28.72328	I-26 EB (Diverge Analysis)	SE
6149	1	17.60391	I-26 EB (Merge Analysis)	S
6149	2	17.453222	I-26 EB (Merge Analysis)	S
6149	3	17.444358	I-26 EB (Merge Analysis)	S
6149	4	17.165142	I-26 EB (Merge Analysis)	S
6149	5	17.637889	I-26 EB (Merge Analysis)	S
6149	6	17.782668	I-26 EB (Merge Analysis)	S
6149	7	17.200598	I-26 EB (Merge Analysis)	S
6149	8	17.689596	I-26 EB (Merge Analysis)	S

Existing PM

ID	Run	Density	Name (Type)	Direction
6149	9	16.940587	I-26 EB (Merge Analysis)	S
6149	10	18.156433	I-26 EB (Merge Analysis)	S
6150	1	17.60391	I-26 EB (Merge Analysis)	S
6150	2	17.453222	I-26 EB (Merge Analysis)	S
6150	3	17.444358	I-26 EB (Merge Analysis)	S
6150	4	17.165142	I-26 EB (Merge Analysis)	S
6150	5	17.637889	I-26 EB (Merge Analysis)	S
6150	6	17.782668	I-26 EB (Merge Analysis)	S
6150	7	17.200598	I-26 EB (Merge Analysis)	S
6150	8	17.689596	I-26 EB (Merge Analysis)	S
6150	9	16.940587	I-26 EB (Merge Analysis)	S
6150	10	18.156433	I-26 EB (Merge Analysis)	S
6151	1	22.800489	I-26 EB (Basic Analysis)	S
6151	2	22.834844	I-26 EB (Basic Analysis)	S
6151	3	24.100514	I-26 EB (Basic Analysis)	S
6151	4	23.391164	I-26 EB (Basic Analysis)	S
6151	5	22.656916	I-26 EB (Basic Analysis)	S
6151	6	24.57496	I-26 EB (Basic Analysis)	S
6151	7	21.674373	I-26 EB (Basic Analysis)	S
6151	8	23.830914	I-26 EB (Basic Analysis)	S
6151	9	22.899159	I-26 EB (Basic Analysis)	S
6151	10	24.266863	I-26 EB (Basic Analysis)	S
6152	1	22.800489	I-26 EB (Basic Analysis)	S
6152	2	22.834844	I-26 EB (Basic Analysis)	S
6152	3	24.100514	I-26 EB (Basic Analysis)	S
6152	4	23.391164	I-26 EB (Basic Analysis)	S
6152	5	22.656916	I-26 EB (Basic Analysis)	S
6152	6	24.57496	I-26 EB (Basic Analysis)	S
6152	7	21.674373	I-26 EB (Basic Analysis)	S
6152	8	23.830914	I-26 EB (Basic Analysis)	S
6152	9	22.899159	I-26 EB (Basic Analysis)	S
6152	10	24.266863	I-26 EB (Basic Analysis)	S
6159	1	23.248556	I-26 WB (Diverge Analysis)	N
6159	2	25.211721	I-26 WB (Diverge Analysis)	N
6159	3	23.896672	I-26 WB (Diverge Analysis)	N
6159	4	24.91066	I-26 WB (Diverge Analysis)	N
6159	5	23.328002	I-26 WB (Diverge Analysis)	N
6159	6	23.685511	I-26 WB (Diverge Analysis)	N
6159	7	24.475795	I-26 WB (Diverge Analysis)	N
6159	8	24.672321	I-26 WB (Diverge Analysis)	N
6159	9	24.312721	I-26 WB (Diverge Analysis)	N
6159	10	25.667493	I-26 WB (Diverge Analysis)	N
6160	1	23.248556	I-26 WB (Diverge Analysis)	N
6160	2	25.211721	I-26 WB (Diverge Analysis)	N
6160	3	23.896672	I-26 WB (Diverge Analysis)	N
6160	4	24.91066	I-26 WB (Diverge Analysis)	N
6160	5	23.328002	I-26 WB (Diverge Analysis)	N
6160	6	23.685511	I-26 WB (Diverge Analysis)	N
6160	7	24.475795	I-26 WB (Diverge Analysis)	N
6160	8	24.672321	I-26 WB (Diverge Analysis)	N
6160	9	24.312721	I-26 WB (Diverge Analysis)	N
6160	10	25.667493	I-26 WB (Diverge Analysis)	N
6165	1	18.313051	I-26 WB (Basic Analysis)	N
6165	2	18.614726	I-26 WB (Basic Analysis)	N
6165	3	19.063811	I-26 WB (Basic Analysis)	N
6165	4	18.804416	I-26 WB (Basic Analysis)	N
6165	5	18.500456	I-26 WB (Basic Analysis)	N

Existing PM

ID	Run	Density	Name (Type)	Direction
6165	6	19.352916	I-26 WB (Basic Analysis)	N
6165	7	20.22366	I-26 WB (Basic Analysis)	N
6165	8	18.867265	I-26 WB (Basic Analysis)	N
6165	9	18.805559	I-26 WB (Basic Analysis)	N
6165	10	19.5906	I-26 WB (Basic Analysis)	N
6166	1	19.027349	I-26 EB (Basic Analysis)	S
6166	2	19.274405	I-26 EB (Basic Analysis)	S
6166	3	19.835748	I-26 EB (Basic Analysis)	S
6166	4	20.161375	I-26 EB (Basic Analysis)	S
6166	5	19.723965	I-26 EB (Basic Analysis)	S
6166	6	19.92647	I-26 EB (Basic Analysis)	S
6166	7	19.116451	I-26 EB (Basic Analysis)	S
6166	8	20.078754	I-26 EB (Basic Analysis)	S
6166	9	19.609752	I-26 EB (Basic Analysis)	S
6166	10	19.796867	I-26 EB (Basic Analysis)	S
6174	1	17.436142	I-26 WB (Basic Analysis)	N
6174	2	26.373576	I-26 WB (Basic Analysis)	N
6174	3	23.270864	I-26 WB (Basic Analysis)	N
6174	4	38.326186	I-26 WB (Basic Analysis)	N
6174	5	18.656345	I-26 WB (Basic Analysis)	N
6174	6	19.44046	I-26 WB (Basic Analysis)	N
6174	7	21.686815	I-26 WB (Basic Analysis)	N
6174	8	18.621542	I-26 WB (Basic Analysis)	N
6174	9	25.553076	I-26 WB (Basic Analysis)	N
6174	10	41.756887	I-26 WB (Basic Analysis)	N
6175	1	17.436142	I-26 WB (Basic Analysis)	N
6175	2	26.373576	I-26 WB (Basic Analysis)	N
6175	3	23.270864	I-26 WB (Basic Analysis)	N
6175	4	38.326186	I-26 WB (Basic Analysis)	N
6175	5	18.656345	I-26 WB (Basic Analysis)	N
6175	6	19.44046	I-26 WB (Basic Analysis)	N
6175	7	21.686815	I-26 WB (Basic Analysis)	N
6175	8	18.621542	I-26 WB (Basic Analysis)	N
6175	9	25.553076	I-26 WB (Basic Analysis)	N
6175	10	41.756887	I-26 WB (Basic Analysis)	N
6177	1	84.981953	I-26 EB (Basic Analysis)	S
6177	2	58.956243	I-26 EB (Basic Analysis)	S
6177	3	68.582992	I-26 EB (Basic Analysis)	S
6177	4	84.478476	I-26 EB (Basic Analysis)	S
6177	5	68.679641	I-26 EB (Basic Analysis)	S
6177	6	75.622678	I-26 EB (Basic Analysis)	S
6177	7	86.818295	I-26 EB (Basic Analysis)	S
6177	8	75.501304	I-26 EB (Basic Analysis)	S
6177	9	74.6382	I-26 EB (Basic Analysis)	S
6177	10	80.214656	I-26 EB (Basic Analysis)	S
6178	1	109.48631	I-26 EB (Diverge Analysis)	S
6178	2	106.179263	I-26 EB (Diverge Analysis)	S
6178	3	105.131071	I-26 EB (Diverge Analysis)	S
6178	4	106.519925	I-26 EB (Diverge Analysis)	S
6178	5	104.787788	I-26 EB (Diverge Analysis)	S
6178	6	103.123782	I-26 EB (Diverge Analysis)	S
6178	7	112.444833	I-26 EB (Diverge Analysis)	S
6178	8	104.682968	I-26 EB (Diverge Analysis)	S
6178	9	104.161493	I-26 EB (Diverge Analysis)	S
6178	10	104.659384	I-26 EB (Diverge Analysis)	S
6185	1	77.345722	I-26 EB (Merge Analysis)	S
6185	2	36.413996	I-26 EB (Merge Analysis)	S

Existing PM

ID	Run	Density	Name (Type)	Direction
6185	3	41.206743	I-26 EB (Merge Analysis)	S
6185	4	75.43206	I-26 EB (Merge Analysis)	S
6185	5	44.936664	I-26 EB (Merge Analysis)	S
6185	6	37.516929	I-26 EB (Merge Analysis)	S
6185	7	70.604935	I-26 EB (Merge Analysis)	S
6185	8	43.086027	I-26 EB (Merge Analysis)	S
6185	9	41.135124	I-26 EB (Merge Analysis)	S
6185	10	54.055203	I-26 EB (Merge Analysis)	S
6186	1	74.327698	I-26 EB (Basic Analysis)	S
6186	2	34.293565	I-26 EB (Basic Analysis)	S
6186	3	40.751506	I-26 EB (Basic Analysis)	S
6186	4	73.750612	I-26 EB (Basic Analysis)	S
6186	5	45.070084	I-26 EB (Basic Analysis)	S
6186	6	41.167581	I-26 EB (Basic Analysis)	S
6186	7	72.365288	I-26 EB (Basic Analysis)	S
6186	8	46.70091	I-26 EB (Basic Analysis)	S
6186	9	46.975105	I-26 EB (Basic Analysis)	S
6186	10	58.392477	I-26 EB (Basic Analysis)	S
6200	1	90.752489	I-26 WB (Weaving Analysis)	NW
6200	2	107.03185	I-26 WB (Weaving Analysis)	NW
6200	3	99.660649	I-26 WB (Weaving Analysis)	NW
6200	4	108.106579	I-26 WB (Weaving Analysis)	NW
6200	5	100.361347	I-26 WB (Weaving Analysis)	NW
6200	6	99.941581	I-26 WB (Weaving Analysis)	NW
6200	7	94.659406	I-26 WB (Weaving Analysis)	NW
6200	8	99.431984	I-26 WB (Weaving Analysis)	NW
6200	9	101.875439	I-26 WB (Weaving Analysis)	NW
6200	10	106.582685	I-26 WB (Weaving Analysis)	NW
6204	1	90.769927	I-26 WB (Basic Analysis)	NW
6204	2	104.705371	I-26 WB (Basic Analysis)	NW
6204	3	99.785246	I-26 WB (Basic Analysis)	NW
6204	4	107.710477	I-26 WB (Basic Analysis)	NW
6204	5	98.587131	I-26 WB (Basic Analysis)	NW
6204	6	99.791138	I-26 WB (Basic Analysis)	NW
6204	7	90.938841	I-26 WB (Basic Analysis)	NW
6204	8	97.687563	I-26 WB (Basic Analysis)	NW
6204	9	100.873369	I-26 WB (Basic Analysis)	NW
6204	10	104.895891	I-26 WB (Basic Analysis)	NW
6205	1	21.628626	I-20 EB (Basic Analysis)	E
6205	2	19.001076	I-20 EB (Basic Analysis)	E
6205	3	20.980586	I-20 EB (Basic Analysis)	E
6205	4	21.126561	I-20 EB (Basic Analysis)	E
6205	5	18.974536	I-20 EB (Basic Analysis)	E
6205	6	20.609013	I-20 EB (Basic Analysis)	E
6205	7	19.930008	I-20 EB (Basic Analysis)	E
6205	8	19.540742	I-20 EB (Basic Analysis)	E
6205	9	21.16416	I-20 EB (Basic Analysis)	E
6205	10	19.268697	I-20 EB (Basic Analysis)	E
6206	1	19.127136	I-20 EB (Merge Analysis)	E
6206	2	20.606055	I-20 EB (Merge Analysis)	E
6206	3	21.022356	I-20 EB (Merge Analysis)	E
6206	4	20.090944	I-20 EB (Merge Analysis)	E
6206	5	19.710281	I-20 EB (Merge Analysis)	E
6206	6	20.314483	I-20 EB (Merge Analysis)	E
6206	7	43.147826	I-20 EB (Merge Analysis)	E
6206	8	20.112002	I-20 EB (Merge Analysis)	E
6206	9	19.622809	I-20 EB (Merge Analysis)	E

Existing PM

ID	Run	Density	Name (Type)	Direction
6206	10	19.3037	I-20 EB (Merge Analysis)	E
6207	1	19.127136	I-20 EB (Merge Analysis)	E
6207	2	20.606055	I-20 EB (Merge Analysis)	E
6207	3	21.022356	I-20 EB (Merge Analysis)	E
6207	4	20.090944	I-20 EB (Merge Analysis)	E
6207	5	19.710281	I-20 EB (Merge Analysis)	E
6207	6	20.314483	I-20 EB (Merge Analysis)	E
6207	7	43.147826	I-20 EB (Merge Analysis)	E
6207	8	20.112002	I-20 EB (Merge Analysis)	E
6207	9	19.622809	I-20 EB (Merge Analysis)	E
6207	10	19.3037	I-20 EB (Merge Analysis)	E
6208	1	19.390767	I-20 EB (Diverge Analysis)	E
6208	2	21.017494	I-20 EB (Diverge Analysis)	E
6208	3	21.479775	I-20 EB (Diverge Analysis)	E
6208	4	20.243716	I-20 EB (Diverge Analysis)	E
6208	5	20.219815	I-20 EB (Diverge Analysis)	E
6208	6	20.449112	I-20 EB (Diverge Analysis)	E
6208	7	42.300881	I-20 EB (Diverge Analysis)	E
6208	8	20.532015	I-20 EB (Diverge Analysis)	E
6208	9	19.970354	I-20 EB (Diverge Analysis)	E
6208	10	19.647697	I-20 EB (Diverge Analysis)	E
6209	1	19.390767	I-20 EB (Diverge Analysis)	E
6209	2	21.017494	I-20 EB (Diverge Analysis)	E
6209	3	21.479775	I-20 EB (Diverge Analysis)	E
6209	4	20.243716	I-20 EB (Diverge Analysis)	E
6209	5	20.219815	I-20 EB (Diverge Analysis)	E
6209	6	20.449112	I-20 EB (Diverge Analysis)	E
6209	7	42.300881	I-20 EB (Diverge Analysis)	E
6209	8	20.532015	I-20 EB (Diverge Analysis)	E
6209	9	19.970354	I-20 EB (Diverge Analysis)	E
6209	10	19.647697	I-20 EB (Diverge Analysis)	E
6216	1	13.288313	I-20 EB (Merge Analysis)	E
6216	2	12.701185	I-20 EB (Merge Analysis)	E
6216	3	13.737751	I-20 EB (Merge Analysis)	E
6216	4	13.929997	I-20 EB (Merge Analysis)	E
6216	5	13.496146	I-20 EB (Merge Analysis)	E
6216	6	14.143025	I-20 EB (Merge Analysis)	E
6216	7	14.75873	I-20 EB (Merge Analysis)	E
6216	8	13.672803	I-20 EB (Merge Analysis)	E
6216	9	12.745349	I-20 EB (Merge Analysis)	E
6216	10	12.823287	I-20 EB (Merge Analysis)	E
6217	1	14.62568	I-20 EB (Basic Analysis)	E
6217	2	15.520768	I-20 EB (Basic Analysis)	E
6217	3	14.652267	I-20 EB (Basic Analysis)	E
6217	4	14.424802	I-20 EB (Basic Analysis)	E
6217	5	15.048114	I-20 EB (Basic Analysis)	E
6217	6	15.703921	I-20 EB (Basic Analysis)	E
6217	7	15.266716	I-20 EB (Basic Analysis)	E
6217	8	15.328752	I-20 EB (Basic Analysis)	E
6217	9	14.339133	I-20 EB (Basic Analysis)	E
6217	10	16.69354	I-20 EB (Basic Analysis)	E
6220	1	22.248295	I-20 WB (Basic Analysis)	W
6220	2	19.379765	I-20 WB (Basic Analysis)	W
6220	3	20.085961	I-20 WB (Basic Analysis)	W
6220	4	21.671256	I-20 WB (Basic Analysis)	W
6220	5	21.656674	I-20 WB (Basic Analysis)	W
6220	6	20.985892	I-20 WB (Basic Analysis)	W

Existing PM

ID	Run	Density	Name (Type)	Direction
6220	7	20.608838	I-20 WB (Basic Analysis)	W
6220	8	21.944152	I-20 WB (Basic Analysis)	W
6220	9	21.200459	I-20 WB (Basic Analysis)	W
6220	10	21.640009	I-20 WB (Basic Analysis)	W
6223	1	34.072625	I-26 EB (Weaving Analysis)	SE
6223	2	33.746103	I-26 EB (Weaving Analysis)	SE
6223	3	33.226932	I-26 EB (Weaving Analysis)	SE
6223	4	35.871764	I-26 EB (Weaving Analysis)	SE
6223	5	36.335426	I-26 EB (Weaving Analysis)	SE
6223	6	32.779596	I-26 EB (Weaving Analysis)	SE
6223	7	33.817938	I-26 EB (Weaving Analysis)	SE
6223	8	34.072625	I-26 EB (Weaving Analysis)	SE
6223	9	35.826051	I-26 EB (Weaving Analysis)	SE
6223	10	36.835006	I-26 EB (Weaving Analysis)	SE
6227	1	20.227763	I-20 WB (Basic Analysis)	W
6227	2	18.769956	I-20 WB (Basic Analysis)	W
6227	3	18.756203	I-20 WB (Basic Analysis)	W
6227	4	20.255269	I-20 WB (Basic Analysis)	W
6227	5	19.102776	I-20 WB (Basic Analysis)	W
6227	6	17.532195	I-20 WB (Basic Analysis)	W
6227	7	15.667302	I-20 WB (Basic Analysis)	W
6227	8	17.595458	I-20 WB (Basic Analysis)	W
6227	9	18.371122	I-20 WB (Basic Analysis)	W
6227	10	20.153498	I-20 WB (Basic Analysis)	W
6229	1	55.495414	I-20 WB (Merge Analysis)	W
6229	2	59.319689	I-20 WB (Merge Analysis)	W
6229	3	58.0724	I-20 WB (Merge Analysis)	W
6229	4	75.875212	I-20 WB (Merge Analysis)	W
6229	5	57.052297	I-20 WB (Merge Analysis)	W
6229	6	47.99164	I-20 WB (Merge Analysis)	W
6229	7	39.910994	I-20 WB (Merge Analysis)	W
6229	8	62.224088	I-20 WB (Merge Analysis)	W
6229	9	62.199588	I-20 WB (Merge Analysis)	W
6229	10	68.890398	I-20 WB (Merge Analysis)	W
6230	1	55.495414	I-20 WB (Merge+Diverge Analysis)	W
6230	2	59.319689	I-20 WB (Merge+Diverge Analysis)	W
6230	3	58.0724	I-20 WB (Merge+Diverge Analysis)	W
6230	4	75.875212	I-20 WB (Merge+Diverge Analysis)	W
6230	5	57.052297	I-20 WB (Merge+Diverge Analysis)	W
6230	6	47.99164	I-20 WB (Merge+Diverge Analysis)	W
6230	7	39.910994	I-20 WB (Merge+Diverge Analysis)	W
6230	8	62.224088	I-20 WB (Merge+Diverge Analysis)	W
6230	9	62.199588	I-20 WB (Merge+Diverge Analysis)	W
6230	10	68.890398	I-20 WB (Merge+Diverge Analysis)	W
6231	1	56.014712	I-20 WB (Diverge Analysis)	W
6231	2	59.874772	I-20 WB (Diverge Analysis)	W
6231	3	58.615813	I-20 WB (Diverge Analysis)	W
6231	4	76.585213	I-20 WB (Diverge Analysis)	W
6231	5	57.586164	I-20 WB (Diverge Analysis)	W
6231	6	48.440721	I-20 WB (Diverge Analysis)	W
6231	7	40.284461	I-20 WB (Diverge Analysis)	W
6231	8	62.80635	I-20 WB (Diverge Analysis)	W
6231	9	62.78162	I-20 WB (Diverge Analysis)	W
6231	10	69.53504	I-20 WB (Diverge Analysis)	W
6234	1	30.245907	I-20 WB (Basic Analysis)	W
6234	2	29.650172	I-20 WB (Basic Analysis)	W
6234	3	27.822473	I-20 WB (Basic Analysis)	W

Existing PM

ID	Run	Density	Name (Type)	Direction
6234	4	38.26774	I-20 WB (Basic Analysis)	W
6234	5	28.994726	I-20 WB (Basic Analysis)	W
6234	6	27.100453	I-20 WB (Basic Analysis)	W
6234	7	23.06826	I-20 WB (Basic Analysis)	W
6234	8	30.948023	I-20 WB (Basic Analysis)	W
6234	9	31.327564	I-20 WB (Basic Analysis)	W
6234	10	32.828569	I-20 WB (Basic Analysis)	W
6238	1	21.277025	I-20 EB (Basic Analysis)	NE
6238	2	19.300459	I-20 EB (Basic Analysis)	NE
6238	3	19.745339	I-20 EB (Basic Analysis)	NE
6238	4	20.136386	I-20 EB (Basic Analysis)	NE
6238	5	19.673224	I-20 EB (Basic Analysis)	NE
6238	6	19.439611	I-20 EB (Basic Analysis)	NE
6238	7	20.894103	I-20 EB (Basic Analysis)	NE
6238	8	20.064271	I-20 EB (Basic Analysis)	NE
6238	9	20.707213	I-20 EB (Basic Analysis)	NE
6238	10	20.807768	I-20 EB (Basic Analysis)	NE
6241	1	23.722347	I-20 EB (Merge Analysis)	NE
6241	2	23.508966	I-20 EB (Merge Analysis)	NE
6241	3	24.276664	I-20 EB (Merge Analysis)	NE
6241	4	23.140613	I-20 EB (Merge Analysis)	NE
6241	5	23.43148	I-20 EB (Merge Analysis)	NE
6241	6	24.534152	I-20 EB (Merge Analysis)	NE
6241	7	21.910389	I-20 EB (Merge Analysis)	NE
6241	8	23.2932	I-20 EB (Merge Analysis)	NE
6241	9	23.835595	I-20 EB (Merge Analysis)	NE
6241	10	22.953457	I-20 EB (Merge Analysis)	NE
6242	1	23.722347	I-20 EB (Merge Analysis)	NE
6242	2	23.508966	I-20 EB (Merge Analysis)	NE
6242	3	24.276664	I-20 EB (Merge Analysis)	NE
6242	4	23.140613	I-20 EB (Merge Analysis)	NE
6242	5	23.43148	I-20 EB (Merge Analysis)	NE
6242	6	24.534152	I-20 EB (Merge Analysis)	NE
6242	7	21.910389	I-20 EB (Merge Analysis)	NE
6242	8	23.2932	I-20 EB (Merge Analysis)	NE
6242	9	23.835595	I-20 EB (Merge Analysis)	NE
6242	10	22.953457	I-20 EB (Merge Analysis)	NE
6246	1	32.85504	I-20 WB (Merge Analysis)	SW
6246	2	44.709937	I-20 WB (Merge Analysis)	SW
6246	3	41.073474	I-20 WB (Merge Analysis)	SW
6246	4	34.633876	I-20 WB (Merge Analysis)	SW
6246	5	40.781008	I-20 WB (Merge Analysis)	SW
6246	6	39.601795	I-20 WB (Merge Analysis)	SW
6246	7	64.481454	I-20 WB (Merge Analysis)	SW
6246	8	43.06999	I-20 WB (Merge Analysis)	SW
6246	9	40.277539	I-20 WB (Merge Analysis)	SW
6246	10	35.773025	I-20 WB (Merge Analysis)	SW
6247	1	32.85504	I-20 WB (Merge Analysis)	SW
6247	2	44.709937	I-20 WB (Merge Analysis)	SW
6247	3	41.073474	I-20 WB (Merge Analysis)	SW
6247	4	34.633876	I-20 WB (Merge Analysis)	SW
6247	5	40.781008	I-20 WB (Merge Analysis)	SW
6247	6	39.601795	I-20 WB (Merge Analysis)	SW
6247	7	64.481454	I-20 WB (Merge Analysis)	SW
6247	8	43.06999	I-20 WB (Merge Analysis)	SW
6247	9	40.277539	I-20 WB (Merge Analysis)	SW
6247	10	35.773025	I-20 WB (Merge Analysis)	SW

Existing PM

ID	Run	Density	Name (Type)	Direction
6249	1	36.801592	I-20 WB (Diverge Analysis)	SW
6249	2	63.520341	I-20 WB (Diverge Analysis)	SW
6249	3	52.326743	I-20 WB (Diverge Analysis)	SW
6249	4	38.968347	I-20 WB (Diverge Analysis)	SW
6249	5	52.803899	I-20 WB (Diverge Analysis)	SW
6249	6	56.345409	I-20 WB (Diverge Analysis)	SW
6249	7	83.549137	I-20 WB (Diverge Analysis)	SW
6249	8	60.526386	I-20 WB (Diverge Analysis)	SW
6249	9	49.598744	I-20 WB (Diverge Analysis)	SW
6249	10	41.43039	I-20 WB (Diverge Analysis)	SW
6251	1	31.419229	I-20 WB (Basic Analysis)	SW
6251	2	32.292261	I-20 WB (Basic Analysis)	SW
6251	3	31.067781	I-20 WB (Basic Analysis)	SW
6251	4	31.529755	I-20 WB (Basic Analysis)	SW
6251	5	32.113433	I-20 WB (Basic Analysis)	SW
6251	6	30.599597	I-20 WB (Basic Analysis)	SW
6251	7	33.273336	I-20 WB (Basic Analysis)	SW
6251	8	32.266182	I-20 WB (Basic Analysis)	SW
6251	9	31.668844	I-20 WB (Basic Analysis)	SW
6251	10	31.591848	I-20 WB (Basic Analysis)	SW
6254	1	24.700167	I-20 EB (Basic Analysis)	NE
6254	2	23.429314	I-20 EB (Basic Analysis)	NE
6254	3	23.716321	I-20 EB (Basic Analysis)	NE
6254	4	24.270283	I-20 EB (Basic Analysis)	NE
6254	5	23.543365	I-20 EB (Basic Analysis)	NE
6254	6	24.354254	I-20 EB (Basic Analysis)	NE
6254	7	23.926877	I-20 EB (Basic Analysis)	NE
6254	8	24.69014	I-20 EB (Basic Analysis)	NE
6254	9	24.029648	I-20 EB (Basic Analysis)	NE
6254	10	23.915597	I-20 EB (Basic Analysis)	NE
6258	1	21.699192	I-20 EB (Merge Analysis)	E
6258	2	20.942487	I-20 EB (Merge Analysis)	E
6258	3	23.742298	I-20 EB (Merge Analysis)	E
6258	4	21.90272	I-20 EB (Merge Analysis)	E
6258	5	23.682284	I-20 EB (Merge Analysis)	E
6258	6	23.943217	I-20 EB (Merge Analysis)	E
6258	7	22.87861	I-20 EB (Merge Analysis)	E
6258	8	21.049469	I-20 EB (Merge Analysis)	E
6258	9	21.12514	I-20 EB (Merge Analysis)	E
6258	10	23.209995	I-20 EB (Merge Analysis)	E
6259	1	27.131434	I-20 EB (Basic Analysis)	E
6259	2	27.122314	I-20 EB (Basic Analysis)	E
6259	3	26.84112	I-20 EB (Basic Analysis)	E
6259	4	25.536987	I-20 EB (Basic Analysis)	E
6259	5	25.672264	I-20 EB (Basic Analysis)	E
6259	6	26.781841	I-20 EB (Basic Analysis)	E
6259	7	25.837941	I-20 EB (Basic Analysis)	E
6259	8	26.34561	I-20 EB (Basic Analysis)	E
6259	9	27.607184	I-20 EB (Basic Analysis)	E
6259	10	25.41387	I-20 EB (Basic Analysis)	E
8539	1	26.918333	I-20 WB (Basic Analysis)	SW
8539	2	25.761779	I-20 WB (Basic Analysis)	SW
8539	3	26.303629	I-20 WB (Basic Analysis)	SW
8539	4	26.418601	I-20 WB (Basic Analysis)	SW
8539	5	26.533574	I-20 WB (Basic Analysis)	SW
8539	6	27.038997	I-20 WB (Basic Analysis)	SW
8539	7	25.988309	I-20 WB (Basic Analysis)	SW

Existing PM

ID	Run	Density	Name (Type)	Direction
8539	8	27.266665	I-20 WB (Basic Analysis)	SW
8539	9	26.886459	I-20 WB (Basic Analysis)	SW
8539	10	26.853447	I-20 WB (Basic Analysis)	SW
8542	1	19.657181	I-20 EB (Basic Analysis)	NE
8542	2	18.793294	I-20 EB (Basic Analysis)	NE
8542	3	19.225536	I-20 EB (Basic Analysis)	NE
8542	4	18.52785	I-20 EB (Basic Analysis)	NE
8542	5	18.850089	I-20 EB (Basic Analysis)	NE
8542	6	19.138848	I-20 EB (Basic Analysis)	NE
8542	7	18.513501	I-20 EB (Basic Analysis)	NE
8542	8	18.453717	I-20 EB (Basic Analysis)	NE
8542	9	18.606765	I-20 EB (Basic Analysis)	NE
8542	10	17.506728	I-20 EB (Basic Analysis)	NE
8543	1	21.841594	I-20 EB (Diverge Analysis)	NE
8543	2	23.311193	I-20 EB (Diverge Analysis)	NE
8543	3	23.00906	I-20 EB (Diverge Analysis)	NE
8543	4	23.915459	I-20 EB (Diverge Analysis)	NE
8543	5	23.94186	I-20 EB (Diverge Analysis)	NE
8543	6	23.014926	I-20 EB (Diverge Analysis)	NE
8543	7	22.46346	I-20 EB (Diverge Analysis)	NE
8543	8	22.627727	I-20 EB (Diverge Analysis)	NE
8543	9	22.92986	I-20 EB (Diverge Analysis)	NE
8543	10	21.87386	I-20 EB (Diverge Analysis)	NE
8551	1	40.101588	I-26 WB (Diverge Analysis)	NW
8551	2	40.606121	I-26 WB (Diverge Analysis)	NW
8551	3	42.058121	I-26 WB (Diverge Analysis)	NW
8551	4	42.395454	I-26 WB (Diverge Analysis)	NW
8551	5	40.770388	I-26 WB (Diverge Analysis)	NW
8551	6	54.621584	I-26 WB (Diverge Analysis)	NW
8551	7	50.051451	I-26 WB (Diverge Analysis)	NW
8551	8	41.964254	I-26 WB (Diverge Analysis)	NW
8551	9	41.993588	I-26 WB (Diverge Analysis)	NW
8551	10	41.609321	I-26 WB (Diverge Analysis)	NW
8552	1	40.971729	I-26 EB (Basic Analysis)	SE
8552	2	40.50022	I-26 EB (Basic Analysis)	SE
8552	3	39.605036	I-26 EB (Basic Analysis)	SE
8552	4	40.110712	I-26 EB (Basic Analysis)	SE
8552	5	39.622974	I-26 EB (Basic Analysis)	SE
8552	6	39.839082	I-26 EB (Basic Analysis)	SE
8552	7	40.519866	I-26 EB (Basic Analysis)	SE
8552	8	40.738537	I-26 EB (Basic Analysis)	SE
8552	9	40.984542	I-26 EB (Basic Analysis)	SE
8552	10	40.850435	I-26 EB (Basic Analysis)	SE
8553	1	93.786112	I-26 EB (Basic Analysis)	S
8553	2	95.623174	I-26 EB (Basic Analysis)	S
8553	3	96.823746	I-26 EB (Basic Analysis)	S
8553	4	97.135255	I-26 EB (Basic Analysis)	S
8553	5	93.333161	I-26 EB (Basic Analysis)	S
8553	6	93.49481	I-26 EB (Basic Analysis)	S
8553	7	97.704391	I-26 EB (Basic Analysis)	S
8553	8	93.375257	I-26 EB (Basic Analysis)	S
8553	9	89.899826	I-26 EB (Basic Analysis)	S
8553	10	94.885655	I-26 EB (Basic Analysis)	S
8554	1	20.776819	I-26 WB (Basic Analysis)	N
8554	2	44.249949	I-26 WB (Basic Analysis)	N
8554	3	42.902689	I-26 WB (Basic Analysis)	N
8554	4	53.463985	I-26 WB (Basic Analysis)	N

Existing PM

ID	Run	Density	Name (Type)	Direction
8554	5	36.048149	I-26 WB (Basic Analysis)	N
8554	6	37.334494	I-26 WB (Basic Analysis)	N
8554	7	40.684728	I-26 WB (Basic Analysis)	N
8554	8	39.808651	I-26 WB (Basic Analysis)	N
8554	9	46.003894	I-26 WB (Basic Analysis)	N
8554	10	54.890074	I-26 WB (Basic Analysis)	N
8559	1	25.170926	I-126 NB (Diverge Analysis)	W
8559	2	27.805058	I-126 NB (Diverge Analysis)	W
8559	3	26.388259	I-126 NB (Diverge Analysis)	W
8559	4	26.948525	I-126 NB (Diverge Analysis)	W
8559	5	27.453058	I-126 NB (Diverge Analysis)	W
8559	6	26.109592	I-126 NB (Diverge Analysis)	W
8559	7	27.367992	I-126 NB (Diverge Analysis)	W
8559	8	26.326659	I-126 NB (Diverge Analysis)	W
8559	9	27.796258	I-126 NB (Diverge Analysis)	W
8559	10	28.547191	I-126 NB (Diverge Analysis)	W
8560	1	13.611623	I-126 SB (Basic Analysis)	E
8560	2	13.497311	I-126 SB (Basic Analysis)	E
8560	3	13.388501	I-126 SB (Basic Analysis)	E
8560	4	13.229566	I-126 SB (Basic Analysis)	E
8560	5	13.016836	I-126 SB (Basic Analysis)	E
8560	6	12.933089	I-126 SB (Basic Analysis)	E
8560	7	13.445963	I-126 SB (Basic Analysis)	E
8560	8	12.716692	I-126 SB (Basic Analysis)	E
8560	9	13.384222	I-126 SB (Basic Analysis)	E
8560	10	12.936757	I-126 SB (Basic Analysis)	E
8658	1	40.38014	I-20 WB (Basic Analysis)	SW
8658	2	64.204071	I-20 WB (Basic Analysis)	SW
8658	3	55.246767	I-20 WB (Basic Analysis)	SW
8658	4	43.675127	I-20 WB (Basic Analysis)	SW
8658	5	61.536327	I-20 WB (Basic Analysis)	SW
8658	6	50.624439	I-20 WB (Basic Analysis)	SW
8658	7	82.136675	I-20 WB (Basic Analysis)	SW
8658	8	64.401736	I-20 WB (Basic Analysis)	SW
8658	9	60.012482	I-20 WB (Basic Analysis)	SW
8658	10	45.306947	I-20 WB (Basic Analysis)	SW
8659	1	27.284198	I-20 EB (Basic Analysis)	NE
8659	2	26.279739	I-20 EB (Basic Analysis)	NE
8659	3	26.829466	I-20 EB (Basic Analysis)	NE
8659	4	26.147502	I-20 EB (Basic Analysis)	NE
8659	5	26.345588	I-20 EB (Basic Analysis)	NE
8659	6	27.178679	I-20 EB (Basic Analysis)	NE
8659	7	26.539085	I-20 EB (Basic Analysis)	NE
8659	8	26.438963	I-20 EB (Basic Analysis)	NE
8659	9	26.984102	I-20 EB (Basic Analysis)	NE
8659	10	26.309695	I-20 EB (Basic Analysis)	NE
8763	1	27.208167	I-26 EB (Basic Analysis)	SE
8763	2	26.896101	I-26 EB (Basic Analysis)	SE
8763	3	27.627656	I-26 EB (Basic Analysis)	SE
8763	4	26.903913	I-26 EB (Basic Analysis)	SE
8763	5	27.485077	I-26 EB (Basic Analysis)	SE
8763	6	26.811899	I-26 EB (Basic Analysis)	SE
8763	7	27.781302	I-26 EB (Basic Analysis)	SE
8763	8	27.977266	I-26 EB (Basic Analysis)	SE
8763	9	27.224009	I-26 EB (Basic Analysis)	SE
8763	10	27.234643	I-26 EB (Basic Analysis)	SE
8764	1	34.343185	I-20 WB (Basic Analysis)	S

Existing PM

ID	Run	Density	Name (Type)	Direction
8764	2	31.908932	I-20 WB (Basic Analysis)	S
8764	3	32.83189	I-20 WB (Basic Analysis)	S
8764	4	31.645274	I-20 WB (Basic Analysis)	S
8764	5	33.31308	I-20 WB (Basic Analysis)	S
8764	6	34.619752	I-20 WB (Basic Analysis)	S
8764	7	32.752166	I-20 WB (Basic Analysis)	S
8764	8	34.492634	I-20 WB (Basic Analysis)	S
8764	9	34.227621	I-20 WB (Basic Analysis)	S
8764	10	33.223562	I-20 WB (Basic Analysis)	S
8765	1	21.061298	I-20 EB (Basic Analysis)	NE
8765	2	20.293476	I-20 EB (Basic Analysis)	NE
8765	3	21.593464	I-20 EB (Basic Analysis)	NE
8765	4	20.873201	I-20 EB (Basic Analysis)	NE
8765	5	21.235293	I-20 EB (Basic Analysis)	NE
8765	6	21.552997	I-20 EB (Basic Analysis)	NE
8765	7	20.866546	I-20 EB (Basic Analysis)	NE
8765	8	20.96225	I-20 EB (Basic Analysis)	NE
8765	9	20.416161	I-20 EB (Basic Analysis)	NE
8765	10	20.60993	I-20 EB (Basic Analysis)	NE
8770	1	32.554123	I-20 WB (Diverge Analysis)	SW
8770	2	34.006123	I-20 WB (Diverge Analysis)	SW
8770	3	34.287723	I-20 WB (Diverge Analysis)	SW
8770	4	34.850923	I-20 WB (Diverge Analysis)	SW
8770	5	34.006123	I-20 WB (Diverge Analysis)	SW
8770	6	33.041057	I-20 WB (Diverge Analysis)	SW
8770	7	32.686123	I-20 WB (Diverge Analysis)	SW
8770	8	35.637056	I-20 WB (Diverge Analysis)	SW
8770	9	36.414389	I-20 WB (Diverge Analysis)	SW
8770	10	34.528256	I-20 WB (Diverge Analysis)	SW
8773	1	22.492306	I-26 WB (Basic Analysis)	N
8773	2	22.956414	I-26 WB (Basic Analysis)	N
8773	3	22.894533	I-26 WB (Basic Analysis)	N
8773	4	22.959361	I-26 WB (Basic Analysis)	N
8773	5	22.91516	I-26 WB (Basic Analysis)	N
8773	6	23.464724	I-26 WB (Basic Analysis)	N
8773	7	23.799176	I-26 WB (Basic Analysis)	N
8773	8	23.939145	I-26 WB (Basic Analysis)	N
8773	9	24.21761	I-26 WB (Basic Analysis)	N
8773	10	23.164158	I-26 WB (Basic Analysis)	N
8774	1	25.584588	I-20 EB (Diverge Analysis)	NE
8774	2	24.756784	I-20 EB (Diverge Analysis)	NE
8774	3	26.552746	I-20 EB (Diverge Analysis)	NE
8774	4	23.685508	I-20 EB (Diverge Analysis)	NE
8774	5	24.175316	I-20 EB (Diverge Analysis)	NE
8774	6	25.630418	I-20 EB (Diverge Analysis)	NE
8774	7	23.221479	I-20 EB (Diverge Analysis)	NE
8774	8	23.482137	I-20 EB (Diverge Analysis)	NE
8774	9	25.160661	I-20 EB (Diverge Analysis)	NE
8774	10	25.593181	I-20 EB (Diverge Analysis)	NE
8783	1	35.688291	I-26 WB (Basic Analysis)	NW
8783	2	36.131981	I-26 WB (Basic Analysis)	NW
8783	3	36.098618	I-26 WB (Basic Analysis)	NW
8783	4	36.206941	I-26 WB (Basic Analysis)	NW
8783	5	35.911003	I-26 WB (Basic Analysis)	NW
8783	6	36.504613	I-26 WB (Basic Analysis)	NW
8783	7	36.261319	I-26 WB (Basic Analysis)	NW
8783	8	36.153863	I-26 WB (Basic Analysis)	NW

Existing PM

ID	Run	Density	Name (Type)	Direction
8783	9	35.888472	I-26 WB (Basic Analysis)	NW
8783	10	36.021276	I-26 WB (Basic Analysis)	NW
8784	1	29.496862	I-26 EB (Basic Analysis)	SE
8784	2	33.126085	I-26 EB (Basic Analysis)	SE
8784	3	36.399924	I-26 EB (Basic Analysis)	SE
8784	4	26.750714	I-26 EB (Basic Analysis)	SE
8784	5	34.68762	I-26 EB (Basic Analysis)	SE
8784	6	32.953778	I-26 EB (Basic Analysis)	SE
8784	7	31.15532	I-26 EB (Basic Analysis)	SE
8784	8	33.287623	I-26 EB (Basic Analysis)	SE
8784	9	33.621469	I-26 EB (Basic Analysis)	SE
8784	10	34.267621	I-26 EB (Basic Analysis)	SE
8817	1	51.836182	I-26 WB (Basic Analysis)	NW
8817	2	51.583401	I-26 WB (Basic Analysis)	NW
8817	3	51.04584	I-26 WB (Basic Analysis)	NW
8817	4	51.282622	I-26 WB (Basic Analysis)	NW
8817	5	52.255351	I-26 WB (Basic Analysis)	NW
8817	6	52.14016	I-26 WB (Basic Analysis)	NW
8817	7	52.610525	I-26 WB (Basic Analysis)	NW
8817	8	51.330619	I-26 WB (Basic Analysis)	NW
8817	9	51.692193	I-26 WB (Basic Analysis)	NW
8817	10	51.32102	I-26 WB (Basic Analysis)	NW

No Build AM

ID	Run	Density	Name (Type)	Direction
2466	1	38.389827	I-20 EB (Weaving Analysis)	E
2466	2	34.459731	I-20 EB (Weaving Analysis)	E
2466	3	39.613732	I-20 EB (Weaving Analysis)	E
2466	4	38.548481	I-20 EB (Weaving Analysis)	E
2466	5	34.940228	I-20 EB (Weaving Analysis)	E
2466	6	39.042577	I-20 EB (Weaving Analysis)	E
2466	7	35.624708	I-20 EB (Weaving Analysis)	E
2466	8	36.037209	I-20 EB (Weaving Analysis)	E
2466	9	38.734334	I-20 EB (Weaving Analysis)	E
2466	10	36.812349	I-20 EB (Weaving Analysis)	E
2467	1	25.95285	I-20 WB (Weaving Analysis)	W
2467	2	26.193002	I-20 WB (Weaving Analysis)	W
2467	3	26.531399	I-20 WB (Weaving Analysis)	W
2467	4	25.396133	I-20 WB (Weaving Analysis)	W
2467	5	26.214834	I-20 WB (Weaving Analysis)	W
2467	6	25.860063	I-20 WB (Weaving Analysis)	W
2467	7	31.476358	I-20 WB (Weaving Analysis)	W
2467	8	26.460445	I-20 WB (Weaving Analysis)	W
2467	9	27.224567	I-20 WB (Weaving Analysis)	W
2467	10	24.964949	I-20 WB (Weaving Analysis)	W
2806	1	66.363772	I-20 EB (Basic Analysis)	NE
2806	2	55.198165	I-20 EB (Basic Analysis)	NE
2806	3	66.658498	I-20 EB (Basic Analysis)	NE
2806	4	62.684211	I-20 EB (Basic Analysis)	NE
2806	5	61.632874	I-20 EB (Basic Analysis)	NE
2806	6	57.478226	I-20 EB (Basic Analysis)	NE
2806	7	55.129925	I-20 EB (Basic Analysis)	NE
2806	8	69.131416	I-20 EB (Basic Analysis)	NE
2806	9	60.147247	I-20 EB (Basic Analysis)	NE
2806	10	63.032819	I-20 EB (Basic Analysis)	NE
2807	1	66.363772	I-20 EB (Basic Analysis)	NE
2807	2	55.198165	I-20 EB (Basic Analysis)	NE
2807	3	66.658498	I-20 EB (Basic Analysis)	NE
2807	4	62.684211	I-20 EB (Basic Analysis)	NE
2807	5	61.632874	I-20 EB (Basic Analysis)	NE
2807	6	57.478226	I-20 EB (Basic Analysis)	NE
2807	7	55.129925	I-20 EB (Basic Analysis)	NE
2807	8	69.131416	I-20 EB (Basic Analysis)	NE
2807	9	60.147247	I-20 EB (Basic Analysis)	NE
2807	10	63.032819	I-20 EB (Basic Analysis)	NE
2808	1	71.963066	I-20 EB (Diverge Analysis)	NE
2808	2	66.582323	I-20 EB (Diverge Analysis)	NE
2808	3	71.861925	I-20 EB (Diverge Analysis)	NE
2808	4	72.130287	I-20 EB (Diverge Analysis)	NE
2808	5	75.365477	I-20 EB (Diverge Analysis)	NE
2808	6	71.039304	I-20 EB (Diverge Analysis)	NE
2808	7	68.775077	I-20 EB (Diverge Analysis)	NE
2808	8	75.47471	I-20 EB (Diverge Analysis)	NE
2808	9	71.949581	I-20 EB (Diverge Analysis)	NE
2808	10	74.753232	I-20 EB (Diverge Analysis)	NE
2813	1	11.87153	I-20 WB (Merge Analysis)	S
2813	2	11.048158	I-20 WB (Merge Analysis)	S
2813	3	11.232793	I-20 WB (Merge Analysis)	S
2813	4	11.283942	I-20 WB (Merge Analysis)	S
2813	5	12.729833	I-20 WB (Merge Analysis)	S
2813	6	11.809153	I-20 WB (Merge Analysis)	S
2813	7	11.020712	I-20 WB (Merge Analysis)	S
2813	8	11.781708	I-20 WB (Merge Analysis)	S
2813	9	11.981313	I-20 WB (Merge Analysis)	S
2813	10	11.4823	I-20 WB (Merge Analysis)	S
2814	1	14.428174	I-20 WB (Basic Analysis)	S
2814	2	13.859158	I-20 WB (Basic Analysis)	S
2814	3	14.150978	I-20 WB (Basic Analysis)	S
2814	4	13.47664	I-20 WB (Basic Analysis)	S

No Build AM

ID	Run	Density	Name (Type)	Direction
2814	5	14.766198	I-20 WB (Basic Analysis)	S
2814	6	14.851557	I-20 WB (Basic Analysis)	S
2814	7	14.26055	I-20 WB (Basic Analysis)	S
2814	8	13.773373	I-20 WB (Basic Analysis)	S
2814	9	14.163176	I-20 WB (Basic Analysis)	S
2814	10	14.256332	I-20 WB (Basic Analysis)	S
2815	1	14.428174	I-20 WB (Basic Analysis)	S
2815	2	13.859158	I-20 WB (Basic Analysis)	S
2815	3	14.150978	I-20 WB (Basic Analysis)	S
2815	4	13.47664	I-20 WB (Basic Analysis)	S
2815	5	14.766198	I-20 WB (Basic Analysis)	S
2815	6	14.851557	I-20 WB (Basic Analysis)	S
2815	7	14.26055	I-20 WB (Basic Analysis)	S
2815	8	13.773373	I-20 WB (Basic Analysis)	S
2815	9	14.163176	I-20 WB (Basic Analysis)	S
2815	10	14.256332	I-20 WB (Basic Analysis)	S
2822	1	10.539474	I-20 WB (Merge Analysis)	SW
2822	2	9.712226	I-20 WB (Merge Analysis)	SW
2822	3	9.499924	I-20 WB (Merge Analysis)	SW
2822	4	9.058237	I-20 WB (Merge Analysis)	SW
2822	5	9.241257	I-20 WB (Merge Analysis)	SW
2822	6	9.636578	I-20 WB (Merge Analysis)	SW
2822	7	8.719041	I-20 WB (Merge Analysis)	SW
2822	8	10.295448	I-20 WB (Merge Analysis)	SW
2822	9	10.234442	I-20 WB (Merge Analysis)	SW
2822	10	9.172929	I-20 WB (Merge Analysis)	SW
2823	1	349.887817	I-20 WB (Basic Analysis)	SW
2823	2	1049.663452	I-20 WB (Basic Analysis)	SW
2823	3	1399.551261	I-20 WB (Basic Analysis)	SW
2823	4	1749.439079	I-20 WB (Basic Analysis)	SW
2823	5	1072.989307	I-20 WB (Basic Analysis)	SW
2823	6	699.775635	I-20 WB (Basic Analysis)	SW
2823	7	816.404907	I-20 WB (Basic Analysis)	SW
2823	8	2530.8552	I-20 WB (Basic Analysis)	SW
2823	9	956.360034	I-20 WB (Basic Analysis)	SW
2823	10	933.034172	I-20 WB (Basic Analysis)	SW
2826	1	111.953085	I-20 EB (Basic Analysis)	NE
2826	2	101.798641	I-20 EB (Basic Analysis)	NE
2826	3	107.645305	I-20 EB (Basic Analysis)	NE
2826	4	117.392477	I-20 EB (Basic Analysis)	NE
2826	5	114.044107	I-20 EB (Basic Analysis)	NE
2826	6	111.548548	I-20 EB (Basic Analysis)	NE
2826	7	100.426493	I-20 EB (Basic Analysis)	NE
2826	8	114.618114	I-20 EB (Basic Analysis)	NE
2826	9	113.2897	I-20 EB (Basic Analysis)	NE
2826	10	115.358856	I-20 EB (Basic Analysis)	NE
2829	1	108.731235	I-20 EB (Merge Analysis)	NE
2829	2	102.547632	I-20 EB (Merge Analysis)	NE
2829	3	104.7171	I-20 EB (Merge Analysis)	NE
2829	4	116.030563	I-20 EB (Merge Analysis)	NE
2829	5	109.35852	I-20 EB (Merge Analysis)	NE
2829	6	111.937088	I-20 EB (Merge Analysis)	NE
2829	7	104.275768	I-20 EB (Merge Analysis)	NE
2829	8	110.99244	I-20 EB (Merge Analysis)	NE
2829	9	107.781628	I-20 EB (Merge Analysis)	NE
2829	10	110.171761	I-20 EB (Merge Analysis)	NE
2830	1	94.084559	I-20 EB (Basic Analysis)	NE
2830	2	98.082824	I-20 EB (Basic Analysis)	NE
2830	3	101.68522	I-20 EB (Basic Analysis)	NE
2830	4	110.209572	I-20 EB (Basic Analysis)	NE
2830	5	103.690949	I-20 EB (Basic Analysis)	NE
2830	6	98.267563	I-20 EB (Basic Analysis)	NE
2830	7	104.799379	I-20 EB (Basic Analysis)	NE
2830	8	106.989847	I-20 EB (Basic Analysis)	NE

No Build AM

ID	Run	Density	Name (Type)	Direction
2830	9	103.347864	I-20 EB (Basic Analysis)	NE
2830	10	106.71274	I-20 EB (Basic Analysis)	NE
2831	1	13.369934	I-20 WB (Basic Analysis)	SW
2831	2	13.163726	I-20 WB (Basic Analysis)	SW
2831	3	12.601135	I-20 WB (Basic Analysis)	SW
2831	4	10.642154	I-20 WB (Basic Analysis)	SW
2831	5	14.864946	I-20 WB (Basic Analysis)	SW
2831	6	13.880973	I-20 WB (Basic Analysis)	SW
2831	7	13.468556	I-20 WB (Basic Analysis)	SW
2831	8	12.157338	I-20 WB (Basic Analysis)	SW
2831	9	14.463736	I-20 WB (Basic Analysis)	SW
2831	10	13.98856	I-20 WB (Basic Analysis)	SW
2837	1	12.929771	I-20 WB (Merge Analysis)	SW
2837	2	13.916088	I-20 WB (Merge Analysis)	SW
2837	3	14.221496	I-20 WB (Merge Analysis)	SW
2837	4	14.659581	I-20 WB (Merge Analysis)	SW
2837	5	13.548096	I-20 WB (Merge Analysis)	SW
2837	6	14.817292	I-20 WB (Merge Analysis)	SW
2837	7	15.10768	I-20 WB (Merge Analysis)	SW
2837	8	14.221496	I-20 WB (Merge Analysis)	SW
2837	9	14.203972	I-20 WB (Merge Analysis)	SW
2837	10	13.911081	I-20 WB (Merge Analysis)	SW
2838	1	23.465666	I-20 WB (Basic Analysis)	SW
2838	2	23.641795	I-20 WB (Basic Analysis)	SW
2838	3	24.300761	I-20 WB (Basic Analysis)	SW
2838	4	22.198346	I-20 WB (Basic Analysis)	SW
2838	5	23.878659	I-20 WB (Basic Analysis)	SW
2838	6	33.933204	I-20 WB (Basic Analysis)	SW
2838	7	24.11451	I-20 WB (Basic Analysis)	SW
2838	8	22.561739	I-20 WB (Basic Analysis)	SW
2838	9	23.427201	I-20 WB (Basic Analysis)	SW
2838	10	23.841206	I-20 WB (Basic Analysis)	SW
2839	1	25.996783	I-20 WB (Diverge Analysis)	SW
2839	2	24.655339	I-20 WB (Diverge Analysis)	SW
2839	3	27.171808	I-20 WB (Diverge Analysis)	SW
2839	4	24.700726	I-20 WB (Diverge Analysis)	SW
2839	5	25.542911	I-20 WB (Diverge Analysis)	SW
2839	6	66.076208	I-20 WB (Diverge Analysis)	SW
2839	7	26.770887	I-20 WB (Diverge Analysis)	SW
2839	8	22.907932	I-20 WB (Diverge Analysis)	SW
2839	9	25.313454	I-20 WB (Diverge Analysis)	SW
2839	10	25.192421	I-20 WB (Diverge Analysis)	SW
2840	1	25.996783	I-20 WB (Diverge Analysis)	SW
2840	2	24.655339	I-20 WB (Diverge Analysis)	SW
2840	3	27.171808	I-20 WB (Diverge Analysis)	SW
2840	4	24.700726	I-20 WB (Diverge Analysis)	SW
2840	5	25.542911	I-20 WB (Diverge Analysis)	SW
2840	6	66.076208	I-20 WB (Diverge Analysis)	SW
2840	7	26.770887	I-20 WB (Diverge Analysis)	SW
2840	8	22.907932	I-20 WB (Diverge Analysis)	SW
2840	9	25.313454	I-20 WB (Diverge Analysis)	SW
2840	10	25.192421	I-20 WB (Diverge Analysis)	SW
2843	1	74.42365	I-20 EB (Merge Analysis)	NE
2843	2	72.195683	I-20 EB (Merge Analysis)	NE
2843	3	74.030792	I-20 EB (Merge Analysis)	NE
2843	4	75.809272	I-20 EB (Merge Analysis)	NE
2843	5	72.241693	I-20 EB (Merge Analysis)	NE
2843	6	75.404026	I-20 EB (Merge Analysis)	NE
2843	7	72.204532	I-20 EB (Merge Analysis)	NE
2843	8	79.261824	I-20 EB (Merge Analysis)	NE
2843	9	75.630539	I-20 EB (Merge Analysis)	NE
2843	10	77.681543	I-20 EB (Merge Analysis)	NE
2844	1	74.42365	I-20 EB (Merge Analysis)	NE
2844	2	72.195683	I-20 EB (Merge Analysis)	NE

No Build AM

ID	Run	Density	Name (Type)	Direction
2844	3	74.030792	I-20 EB (Merge Analysis)	NE
2844	4	75.809272	I-20 EB (Merge Analysis)	NE
2844	5	72.241693	I-20 EB (Merge Analysis)	NE
2844	6	75.404026	I-20 EB (Merge Analysis)	NE
2844	7	72.204532	I-20 EB (Merge Analysis)	NE
2844	8	79.261824	I-20 EB (Merge Analysis)	NE
2844	9	75.630539	I-20 EB (Merge Analysis)	NE
2844	10	77.681543	I-20 EB (Merge Analysis)	NE
2848	1	32.076522	I-20 EB (Basic Analysis)	NE
2848	2	31.353268	I-20 EB (Basic Analysis)	NE
2848	3	33.126756	I-20 EB (Basic Analysis)	NE
2848	4	32.379682	I-20 EB (Basic Analysis)	NE
2848	5	31.704068	I-20 EB (Basic Analysis)	NE
2848	6	30.85955	I-20 EB (Basic Analysis)	NE
2848	7	30.134131	I-20 EB (Basic Analysis)	NE
2848	8	30.950498	I-20 EB (Basic Analysis)	NE
2848	9	32.340704	I-20 EB (Basic Analysis)	NE
2848	10	30.772933	I-20 EB (Basic Analysis)	NE
2852	1	17.799245	I-20 WB (Basic Analysis)	SW
2852	2	17.84396	I-20 WB (Basic Analysis)	SW
2852	3	18.360974	I-20 WB (Basic Analysis)	SW
2852	4	15.914241	I-20 WB (Basic Analysis)	SW
2852	5	16.737271	I-20 WB (Basic Analysis)	SW
2852	6	18.504899	I-20 WB (Basic Analysis)	SW
2852	7	17.890072	I-20 WB (Basic Analysis)	SW
2852	8	16.284535	I-20 WB (Basic Analysis)	SW
2852	9	18.496515	I-20 WB (Basic Analysis)	SW
2852	10	19.628356	I-20 WB (Basic Analysis)	SW
2856	1	24.714147	I-20 EB (Basic Analysis)	NE
2856	2	24.56392	I-20 EB (Basic Analysis)	NE
2856	3	24.710295	I-20 EB (Basic Analysis)	NE
2856	4	24.026573	I-20 EB (Basic Analysis)	NE
2856	5	24.910597	I-20 EB (Basic Analysis)	NE
2856	6	24.226874	I-20 EB (Basic Analysis)	NE
2856	7	23.853235	I-20 EB (Basic Analysis)	NE
2856	8	23.304331	I-20 EB (Basic Analysis)	NE
2856	9	24.369397	I-20 EB (Basic Analysis)	NE
2856	10	23.743454	I-20 EB (Basic Analysis)	NE
2859	1	36.570974	I-20 WB (Weaving Analysis)	SW
2859	2	60.991125	I-20 WB (Weaving Analysis)	SW
2859	3	65.913246	I-20 WB (Weaving Analysis)	SW
2859	4	46.749564	I-20 WB (Weaving Analysis)	SW
2859	5	32.440287	I-20 WB (Weaving Analysis)	SW
2859	6	42.838954	I-20 WB (Weaving Analysis)	SW
2859	7	71.355934	I-20 WB (Weaving Analysis)	SW
2859	8	36.763542	I-20 WB (Weaving Analysis)	SW
2859	9	36.953994	I-20 WB (Weaving Analysis)	SW
2859	10	65.054096	I-20 WB (Weaving Analysis)	SW
2863	1	20.840271	I-20 EB (Merge Analysis)	E
2863	2	20.481762	I-20 EB (Merge Analysis)	E
2863	3	21.097462	I-20 EB (Merge Analysis)	E
2863	4	20.926001	I-20 EB (Merge Analysis)	E
2863	5	20.770128	I-20 EB (Merge Analysis)	E
2863	6	20.91561	I-20 EB (Merge Analysis)	E
2863	7	20.577884	I-20 EB (Merge Analysis)	E
2863	8	20.375249	I-20 EB (Merge Analysis)	E
2863	9	21.016927	I-20 EB (Merge Analysis)	E
2863	10	20.481762	I-20 EB (Merge Analysis)	E
4563	1	20.163727	I-126 SB (Merge Analysis)	E
4563	2	17.494395	I-126 SB (Merge Analysis)	E
4563	3	19.776527	I-126 SB (Merge Analysis)	E
4563	4	18.072261	I-126 SB (Merge Analysis)	E
4563	5	17.523728	I-126 SB (Merge Analysis)	E
4563	6	19.732527	I-126 SB (Merge Analysis)	E

No Build AM

ID	Run	Density	Name (Type)	Direction
4563	7	18.741061	I-126 SB (Merge Analysis)	E
4563	8	18.359728	I-126 SB (Merge Analysis)	E
4563	9	17.875728	I-126 SB (Merge Analysis)	E
4563	10	17.907995	I-126 SB (Merge Analysis)	E
4566	1	16.083705	I-126 NB (Basic Analysis)	W
4566	2	15.780239	I-126 NB (Basic Analysis)	W
4566	3	14.472545	I-126 NB (Basic Analysis)	W
4566	4	15.348286	I-126 NB (Basic Analysis)	W
4566	5	15.084549	I-126 NB (Basic Analysis)	W
4566	6	16.108219	I-126 NB (Basic Analysis)	W
4566	7	14.787	I-126 NB (Basic Analysis)	W
4566	8	14.688945	I-126 NB (Basic Analysis)	W
4566	9	15.041439	I-126 NB (Basic Analysis)	W
4566	10	15.595116	I-126 NB (Basic Analysis)	W
4570	1	13.618078	I-126 NB (Basic Analysis)	NW
4570	2	13.243902	I-126 NB (Basic Analysis)	NW
4570	3	13.345192	I-126 NB (Basic Analysis)	NW
4570	4	14.154316	I-126 NB (Basic Analysis)	NW
4570	5	13.313017	I-126 NB (Basic Analysis)	NW
4570	6	13.664551	I-126 NB (Basic Analysis)	NW
4570	7	14.124525	I-126 NB (Basic Analysis)	NW
4570	8	12.811336	I-126 NB (Basic Analysis)	NW
4570	9	13.616886	I-126 NB (Basic Analysis)	NW
4570	10	13.216494	I-126 NB (Basic Analysis)	NW
4573	1	24.458434	I-126 SB (Basic Analysis)	E
4573	2	25.789434	I-126 SB (Basic Analysis)	E
4573	3	24.99555	I-126 SB (Basic Analysis)	E
4573	4	24.547516	I-126 SB (Basic Analysis)	E
4573	5	25.178956	I-126 SB (Basic Analysis)	E
4573	6	24.01302	I-126 SB (Basic Analysis)	E
4573	7	25.307339	I-126 SB (Basic Analysis)	E
4573	8	25.163235	I-126 SB (Basic Analysis)	E
4573	9	25.810394	I-126 SB (Basic Analysis)	E
4573	10	24.123064	I-126 SB (Basic Analysis)	E
4578	1	25.775746	I-126 SB (Basic Analysis)	E
4578	2	24.776863	I-126 SB (Basic Analysis)	E
4578	3	26.044481	I-126 SB (Basic Analysis)	E
4578	4	24.925596	I-126 SB (Basic Analysis)	E
4578	5	24.705031	I-126 SB (Basic Analysis)	E
4578	6	25.349826	I-126 SB (Basic Analysis)	E
4578	7	24.80813	I-126 SB (Basic Analysis)	E
4578	8	25.23405	I-126 SB (Basic Analysis)	E
4578	9	25.352361	I-126 SB (Basic Analysis)	E
4578	10	24.340802	I-126 SB (Basic Analysis)	E
4579	1	15.598355	I-126 SB (Diverge Analysis)	E
4579	2	15.63758	I-126 SB (Diverge Analysis)	E
4579	3	15.449301	I-126 SB (Diverge Analysis)	E
4579	4	16.615582	I-126 SB (Diverge Analysis)	E
4579	5	15.62189	I-126 SB (Diverge Analysis)	E
4579	6	13.872468	I-126 SB (Diverge Analysis)	E
4579	7	17.292862	I-126 SB (Diverge Analysis)	E
4579	8	16.550208	I-126 SB (Diverge Analysis)	E
4579	9	17.062744	I-126 SB (Diverge Analysis)	E
4579	10	14.842626	I-126 SB (Diverge Analysis)	E
4586	1	7.852129	I-126 NB (Merge Analysis)	NW
4586	2	8.729495	I-126 NB (Merge Analysis)	NW
4586	3	7.752027	I-126 NB (Merge Analysis)	NW
4586	4	8.18335	I-126 NB (Merge Analysis)	NW
4586	5	8.389442	I-126 NB (Merge Analysis)	NW
4586	6	9.16965	I-126 NB (Merge Analysis)	NW
4586	7	8.06411	I-126 NB (Merge Analysis)	NW
4586	8	8.826653	I-126 NB (Merge Analysis)	NW
4586	9	8.829597	I-126 NB (Merge Analysis)	NW
4586	10	8.305533	I-126 NB (Merge Analysis)	NW

No Build AM

ID	Run	Density	Name (Type)	Direction
4587	1	14.130164	I-126 NB (Basic Analysis)	NW
4587	2	14.455542	I-126 NB (Basic Analysis)	NW
4587	3	13.419886	I-126 NB (Basic Analysis)	NW
4587	4	12.233444	I-126 NB (Basic Analysis)	NW
4587	5	13.616304	I-126 NB (Basic Analysis)	NW
4587	6	13.17982	I-126 NB (Basic Analysis)	NW
4587	7	13.374254	I-126 NB (Basic Analysis)	NW
4587	8	12.465574	I-126 NB (Basic Analysis)	NW
4587	9	13.241325	I-126 NB (Basic Analysis)	NW
4587	10	14.116276	I-126 NB (Basic Analysis)	NW
4588	1	8.850614	I-126 NB (Diverge Analysis)	NW
4588	2	8.129912	I-126 NB (Diverge Analysis)	NW
4588	3	8.268921	I-126 NB (Diverge Analysis)	NW
4588	4	8.557657	I-126 NB (Diverge Analysis)	NW
4588	5	8.189503	I-126 NB (Diverge Analysis)	NW
4588	6	8.882248	I-126 NB (Diverge Analysis)	NW
4588	7	9.097921	I-126 NB (Diverge Analysis)	NW
4588	8	9.208068	I-126 NB (Diverge Analysis)	NW
4588	9	9.115463	I-126 NB (Diverge Analysis)	NW
4588	10	8.582381	I-126 NB (Diverge Analysis)	NW
4589	1	8.850614	I-126 NB (Diverge Analysis)	NW
4589	2	8.129912	I-126 NB (Diverge Analysis)	NW
4589	3	8.268921	I-126 NB (Diverge Analysis)	NW
4589	4	8.557657	I-126 NB (Diverge Analysis)	NW
4589	5	8.189503	I-126 NB (Diverge Analysis)	NW
4589	6	8.882248	I-126 NB (Diverge Analysis)	NW
4589	7	9.097921	I-126 NB (Diverge Analysis)	NW
4589	8	9.208068	I-126 NB (Diverge Analysis)	NW
4589	9	9.115463	I-126 NB (Diverge Analysis)	NW
4589	10	8.582381	I-126 NB (Diverge Analysis)	NW
4593	1	24.38467	I-126 SB (Merge Analysis)	SE
4593	2	24.138098	I-126 SB (Merge Analysis)	SE
4593	3	25.858911	I-126 SB (Merge Analysis)	SE
4593	4	25.360576	I-126 SB (Merge Analysis)	SE
4593	5	23.826639	I-126 SB (Merge Analysis)	SE
4593	6	24.581927	I-126 SB (Merge Analysis)	SE
4593	7	24.400243	I-126 SB (Merge Analysis)	SE
4593	8	24.068019	I-126 SB (Merge Analysis)	SE
4593	9	26.811457	I-126 SB (Merge Analysis)	SE
4593	10	24.132907	I-126 SB (Merge Analysis)	SE
4594	1	30.072893	I-126 SB (Basic Analysis)	SE
4594	2	29.612397	I-126 SB (Basic Analysis)	SE
4594	3	29.448158	I-126 SB (Basic Analysis)	SE
4594	4	29.42144	I-126 SB (Basic Analysis)	SE
4594	5	29.893723	I-126 SB (Basic Analysis)	SE
4594	6	29.271347	I-126 SB (Basic Analysis)	SE
4594	7	29.463089	I-126 SB (Basic Analysis)	SE
4594	8	29.638329	I-126 SB (Basic Analysis)	SE
4594	9	30.369936	I-126 SB (Basic Analysis)	SE
4594	10	29.385292	I-126 SB (Basic Analysis)	SE
4599	1	13.423229	I-126 NB (Basic Analysis)	NW
4599	2	13.905726	I-126 NB (Basic Analysis)	NW
4599	3	11.731638	I-126 NB (Basic Analysis)	NW
4599	4	13.920555	I-126 NB (Basic Analysis)	NW
4599	5	12.651006	I-126 NB (Basic Analysis)	NW
4599	6	13.278366	I-126 NB (Basic Analysis)	NW
4599	7	12.25862	I-126 NB (Basic Analysis)	NW
4599	8	13.130081	I-126 NB (Basic Analysis)	NW
4599	9	12.581426	I-126 NB (Basic Analysis)	NW
4599	10	13.136925	I-126 NB (Basic Analysis)	NW
4601	1	16.895433	I-126 NB (Basic Analysis)	NW
4601	2	16.283641	I-126 NB (Basic Analysis)	NW
4601	3	16.040098	I-126 NB (Basic Analysis)	NW
4601	4	14.322092	I-126 NB (Basic Analysis)	NW

No Build AM

ID	Run	Density	Name (Type)	Direction
4601	5	14.91041	I-126 NB (Basic Analysis)	NW
4601	6	16.117856	I-126 NB (Basic Analysis)	NW
4601	7	15.131946	I-126 NB (Basic Analysis)	NW
4601	8	14.6654	I-126 NB (Basic Analysis)	NW
4601	9	15.184763	I-126 NB (Basic Analysis)	NW
4601	10	15.6205	I-126 NB (Basic Analysis)	NW
4602	1	9.112716	WB EXPRESSWAY TO I-26 WB (Basic Anal	NW
4602	2	8.031546	WB EXPRESSWAY TO I-26 WB (Basic Anal	NW
4602	3	8.353323	WB EXPRESSWAY TO I-26 WB (Basic Anal	NW
4602	4	7.95432	WB EXPRESSWAY TO I-26 WB (Basic Anal	NW
4602	5	8.739455	WB EXPRESSWAY TO I-26 WB (Basic Anal	NW
4602	6	8.881037	WB EXPRESSWAY TO I-26 WB (Basic Anal	NW
4602	7	10.090917	WB EXPRESSWAY TO I-26 WB (Basic Anal	NW
4602	8	8.083031	WB EXPRESSWAY TO I-26 WB (Basic Anal	NW
4602	9	8.610744	WB EXPRESSWAY TO I-26 WB (Basic Anal	NW
4602	10	7.439477	WB EXPRESSWAY TO I-26 WB (Basic Anal	NW
4603	1	25.568531	I-126 NB (Basic Analysis)	NW
4603	2	24.66128	I-126 NB (Basic Analysis)	NW
4603	3	24.315562	I-126 NB (Basic Analysis)	NW
4603	4	24.221274	I-126 NB (Basic Analysis)	NW
4603	5	24.977666	I-126 NB (Basic Analysis)	NW
4603	6	25.352718	I-126 NB (Basic Analysis)	NW
4603	7	26.048346	I-126 NB (Basic Analysis)	NW
4603	8	23.219737	I-126 NB (Basic Analysis)	NW
4603	9	24.711566	I-126 NB (Basic Analysis)	NW
4603	10	24.254799	I-126 NB (Basic Analysis)	NW
4609	1	30.614384	I-126 SB (Basic Analysis)	SE
4609	2	30.328841	I-126 SB (Basic Analysis)	SE
4609	3	30.366599	I-126 SB (Basic Analysis)	SE
4609	4	29.151274	I-126 SB (Basic Analysis)	SE
4609	5	30.446834	I-126 SB (Basic Analysis)	SE
4609	6	30.66394	I-126 SB (Basic Analysis)	SE
4609	7	29.203191	I-126 SB (Basic Analysis)	SE
4609	8	30.18725	I-126 SB (Basic Analysis)	SE
4609	9	30.791373	I-126 SB (Basic Analysis)	SE
4609	10	29.351862	I-126 SB (Basic Analysis)	SE
4611	1	59.599449	I-26 EB (Diverge Analysis)	SE
4611	2	60.391448	I-26 EB (Diverge Analysis)	SE
4611	3	60.523449	I-26 EB (Diverge Analysis)	SE
4611	4	55.791983	I-26 EB (Diverge Analysis)	SE
4611	5	57.815982	I-26 EB (Diverge Analysis)	SE
4611	6	57.616516	I-26 EB (Diverge Analysis)	SE
4611	7	59.529049	I-26 EB (Diverge Analysis)	SE
4611	8	57.399449	I-26 EB (Diverge Analysis)	SE
4611	9	58.437849	I-26 EB (Diverge Analysis)	SE
4611	10	57.824783	I-26 EB (Diverge Analysis)	SE
4619	1	40.803785	I-26 WB (Basic Analysis)	NW
4619	2	40.692905	I-26 WB (Basic Analysis)	NW
4619	3	41.269481	I-26 WB (Basic Analysis)	NW
4619	4	39.628459	I-26 WB (Basic Analysis)	NW
4619	5	36.169007	I-26 WB (Basic Analysis)	NW
4619	6	46.148194	I-26 WB (Basic Analysis)	NW
4619	7	32.310389	I-26 WB (Basic Analysis)	NW
4619	8	38.785772	I-26 WB (Basic Analysis)	NW
4619	9	38.586188	I-26 WB (Basic Analysis)	NW
4619	10	37.854381	I-26 WB (Basic Analysis)	NW
4624	1	94.876458	I-26 EB (Weaving Analysis)	SE
4624	2	100.94575	I-26 EB (Weaving Analysis)	SE
4624	3	100.586845	I-26 EB (Weaving Analysis)	SE
4624	4	86.338598	I-26 EB (Weaving Analysis)	SE
4624	5	94.041931	I-26 EB (Weaving Analysis)	SE
4624	6	90.204854	I-26 EB (Weaving Analysis)	SE
4624	7	94.266611	I-26 EB (Weaving Analysis)	SE
4624	8	92.32327	I-26 EB (Weaving Analysis)	SE

No Build AM

ID	Run	Density	Name (Type)	Direction
4624	9	97.657244	I-26 EB (Weaving Analysis)	SE
4624	10	94.330806	I-26 EB (Weaving Analysis)	SE
4639	1	73.947817	I-26 EB (Basic Analysis)	SE
4639	2	90.615334	I-26 EB (Basic Analysis)	SE
4639	3	91.912359	I-26 EB (Basic Analysis)	SE
4639	4	57.23806	I-26 EB (Basic Analysis)	SE
4639	5	81.069031	I-26 EB (Basic Analysis)	SE
4639	6	72.929081	I-26 EB (Basic Analysis)	SE
4639	7	77.980521	I-26 EB (Basic Analysis)	SE
4639	8	61.737892	I-26 EB (Basic Analysis)	SE
4639	9	76.820156	I-26 EB (Basic Analysis)	SE
4639	10	73.967695	I-26 EB (Basic Analysis)	SE
4641	1	86.764434	I-26 EB (Basic Analysis)	SE
4641	2	90.924101	I-26 EB (Basic Analysis)	SE
4641	3	84.503271	I-26 EB (Basic Analysis)	SE
4641	4	83.36179	I-26 EB (Basic Analysis)	SE
4641	5	88.292353	I-26 EB (Basic Analysis)	SE
4641	6	85.077975	I-26 EB (Basic Analysis)	SE
4641	7	84.62812	I-26 EB (Basic Analysis)	SE
4641	8	86.786233	I-26 EB (Basic Analysis)	SE
4641	9	84.695499	I-26 EB (Basic Analysis)	SE
4641	10	87.913842	I-26 EB (Basic Analysis)	SE
4643	1	34.508689	I-26 WB (Weaving Analysis)	NW
4643	2	33.508695	I-26 WB (Weaving Analysis)	NW
4643	3	36.668819	I-26 WB (Weaving Analysis)	NW
4643	4	34.067411	I-26 WB (Weaving Analysis)	NW
4643	5	33.736452	I-26 WB (Weaving Analysis)	NW
4643	6	35.444627	I-26 WB (Weaving Analysis)	NW
4643	7	36.142131	I-26 WB (Weaving Analysis)	NW
4643	8	32.850336	I-26 WB (Weaving Analysis)	NW
4643	9	35.163489	I-26 WB (Weaving Analysis)	NW
4643	10	35.907258	I-26 WB (Weaving Analysis)	NW
4646	1	35.104451	I-26 WB (Basic Analysis)	NW
4646	2	34.436502	I-26 WB (Basic Analysis)	NW
4646	3	34.665898	I-26 WB (Basic Analysis)	NW
4646	4	30.473785	I-26 WB (Basic Analysis)	NW
4646	5	34.710878	I-26 WB (Basic Analysis)	NW
4646	6	35.851115	I-26 WB (Basic Analysis)	NW
4646	7	33.042129	I-26 WB (Basic Analysis)	NW
4646	8	32.362935	I-26 WB (Basic Analysis)	NW
4646	9	35.477783	I-26 WB (Basic Analysis)	NW
4646	10	33.878752	I-26 WB (Basic Analysis)	NW
4649	1	109.31722	I-26 EB (Basic Analysis)	SE
4649	2	118.819348	I-26 EB (Basic Analysis)	SE
4649	3	105.635146	I-26 EB (Basic Analysis)	SE
4649	4	109.854091	I-26 EB (Basic Analysis)	SE
4649	5	109.3386	I-26 EB (Basic Analysis)	SE
4649	6	105.929712	I-26 EB (Basic Analysis)	SE
4649	7	105.309698	I-26 EB (Basic Analysis)	SE
4649	8	113.493405	I-26 EB (Basic Analysis)	SE
4649	9	101.815291	I-26 EB (Basic Analysis)	SE
4649	10	112.939906	I-26 EB (Basic Analysis)	SE
4650	1	110.969397	I-26 EB (Weaving Analysis)	SE
4650	2	114.075588	I-26 EB (Weaving Analysis)	SE
4650	3	104.388209	I-26 EB (Weaving Analysis)	SE
4650	4	108.695511	I-26 EB (Weaving Analysis)	SE
4650	5	106.562419	I-26 EB (Weaving Analysis)	SE
4650	6	108.498648	I-26 EB (Weaving Analysis)	SE
4650	7	105.266615	I-26 EB (Weaving Analysis)	SE
4650	8	111.778029	I-26 EB (Weaving Analysis)	SE
4650	9	104.590055	I-26 EB (Weaving Analysis)	SE
4650	10	112.20664	I-26 EB (Weaving Analysis)	SE
4651	1	35.23485	I-26 WB (Weaving Analysis)	NW
4651	2	35.623662	I-26 WB (Weaving Analysis)	NW

No Build AM

ID	Run	Density	Name (Type)	Direction
4651	3	35.226112	I-26 WB (Weaving Analysis)	NW
4651	4	36.079461	I-26 WB (Weaving Analysis)	NW
4651	5	35.344067	I-26 WB (Weaving Analysis)	NW
4651	6	36.258577	I-26 WB (Weaving Analysis)	NW
4651	7	35.205725	I-26 WB (Weaving Analysis)	NW
4651	8	35.067384	I-26 WB (Weaving Analysis)	NW
4651	9	36.791556	I-26 WB (Weaving Analysis)	NW
4651	10	35.658611	I-26 WB (Weaving Analysis)	NW
4654	1	36.74705	I-26 WB (Basic Analysis)	NW
4654	2	38.242362	I-26 WB (Basic Analysis)	NW
4654	3	38.161483	I-26 WB (Basic Analysis)	NW
4654	4	35.945789	I-26 WB (Basic Analysis)	NW
4654	5	36.948306	I-26 WB (Basic Analysis)	NW
4654	6	35.979645	I-26 WB (Basic Analysis)	NW
4654	7	36.639839	I-26 WB (Basic Analysis)	NW
4654	8	35.17086	I-26 WB (Basic Analysis)	NW
4654	9	38.503806	I-26 WB (Basic Analysis)	NW
4654	10	38.663682	I-26 WB (Basic Analysis)	NW
4659	1	47.090163	I-26 WB (Basic Analysis)	NW
4659	2	47.860191	I-26 WB (Basic Analysis)	NW
4659	3	48.656544	I-26 WB (Basic Analysis)	NW
4659	4	48.209006	I-26 WB (Basic Analysis)	NW
4659	5	46.965115	I-26 WB (Basic Analysis)	NW
4659	6	46.333298	I-26 WB (Basic Analysis)	NW
4659	7	49.446316	I-26 WB (Basic Analysis)	NW
4659	8	48.307728	I-26 WB (Basic Analysis)	NW
4659	9	46.129273	I-26 WB (Basic Analysis)	NW
4659	10	45.536944	I-26 WB (Basic Analysis)	NW
4665	1	97.968664	I-26 EB (Basic Analysis)	SE
4665	2	111.711454	I-26 EB (Basic Analysis)	SE
4665	3	96.81166	I-26 EB (Basic Analysis)	SE
4665	4	98.305002	I-26 EB (Basic Analysis)	SE
4665	5	103.168456	I-26 EB (Basic Analysis)	SE
4665	6	96.778026	I-26 EB (Basic Analysis)	SE
4665	7	96.905835	I-26 EB (Basic Analysis)	SE
4665	8	102.704309	I-26 EB (Basic Analysis)	SE
4665	9	92.654516	I-26 EB (Basic Analysis)	SE
4665	10	104.971231	I-26 EB (Basic Analysis)	SE
4667	1	90.968279	I-26 EB (Merge Analysis)	SE
4667	2	95.270061	I-26 EB (Merge Analysis)	SE
4667	3	85.017832	I-26 EB (Merge Analysis)	SE
4667	4	85.034986	I-26 EB (Merge Analysis)	SE
4667	5	91.151253	I-26 EB (Merge Analysis)	SE
4667	6	88.753539	I-26 EB (Merge Analysis)	SE
4667	7	86.279586	I-26 EB (Merge Analysis)	SE
4667	8	89.836131	I-26 EB (Merge Analysis)	SE
4667	9	85.656333	I-26 EB (Merge Analysis)	SE
4667	10	94.448586	I-26 EB (Merge Analysis)	SE
4668	1	90.968279	I-26 EB (Merge Analysis)	SE
4668	2	95.270061	I-26 EB (Merge Analysis)	SE
4668	3	85.017832	I-26 EB (Merge Analysis)	SE
4668	4	85.034986	I-26 EB (Merge Analysis)	SE
4668	5	91.151253	I-26 EB (Merge Analysis)	SE
4668	6	88.753539	I-26 EB (Merge Analysis)	SE
4668	7	86.279586	I-26 EB (Merge Analysis)	SE
4668	8	89.836131	I-26 EB (Merge Analysis)	SE
4668	9	85.656333	I-26 EB (Merge Analysis)	SE
4668	10	94.448586	I-26 EB (Merge Analysis)	SE
4669	1	79.147716	I-26 EB (Basic Analysis)	SE
4669	2	83.907053	I-26 EB (Basic Analysis)	SE
4669	3	74.20184	I-26 EB (Basic Analysis)	SE
4669	4	77.405536	I-26 EB (Basic Analysis)	SE
4669	5	77.961733	I-26 EB (Basic Analysis)	SE
4669	6	76.113447	I-26 EB (Basic Analysis)	SE

No Build AM

ID	Run	Density	Name (Type)	Direction
4669	7	71.393472	I-26 EB (Basic Analysis)	SE
4669	8	78.892722	I-26 EB (Basic Analysis)	SE
4669	9	73.183571	I-26 EB (Basic Analysis)	SE
4669	10	82.690264	I-26 EB (Basic Analysis)	SE
4670	1	71.22541	I-26 EB (Diverge Analysis)	SE
4670	2	80.54611	I-26 EB (Diverge Analysis)	SE
4670	3	70.97092	I-26 EB (Diverge Analysis)	SE
4670	4	73.293142	I-26 EB (Diverge Analysis)	SE
4670	5	76.044816	I-26 EB (Diverge Analysis)	SE
4670	6	70.984554	I-26 EB (Diverge Analysis)	SE
4670	7	67.976117	I-26 EB (Diverge Analysis)	SE
4670	8	75.081389	I-26 EB (Diverge Analysis)	SE
4670	9	69.514419	I-26 EB (Diverge Analysis)	SE
4670	10	78.298871	I-26 EB (Diverge Analysis)	SE
4675	1	30.668971	I-26 WB (Merge Analysis)	NW
4675	2	31.832526	I-26 WB (Merge Analysis)	NW
4675	3	32.782926	I-26 WB (Merge Analysis)	NW
4675	4	36.371369	I-26 WB (Merge Analysis)	NW
4675	5	32.620615	I-26 WB (Merge Analysis)	NW
4675	6	32.225593	I-26 WB (Merge Analysis)	NW
4675	7	32.636259	I-26 WB (Merge Analysis)	NW
4675	8	30.033415	I-26 WB (Merge Analysis)	NW
4675	9	33.373503	I-26 WB (Merge Analysis)	NW
4675	10	31.529415	I-26 WB (Merge Analysis)	NW
4676	1	45.011942	I-26 WB (Basic Analysis)	NW
4676	2	45.136431	I-26 WB (Basic Analysis)	NW
4676	3	46.353104	I-26 WB (Basic Analysis)	NW
4676	4	64.610677	I-26 WB (Basic Analysis)	NW
4676	5	45.322334	I-26 WB (Basic Analysis)	NW
4676	6	45.660115	I-26 WB (Basic Analysis)	NW
4676	7	44.91318	I-26 WB (Basic Analysis)	NW
4676	8	43.907308	I-26 WB (Basic Analysis)	NW
4676	9	46.027773	I-26 WB (Basic Analysis)	NW
4676	10	45.179587	I-26 WB (Basic Analysis)	NW
4677	1	45.011942	I-26 WB (Basic Analysis)	NW
4677	2	45.136431	I-26 WB (Basic Analysis)	NW
4677	3	46.353104	I-26 WB (Basic Analysis)	NW
4677	4	64.610677	I-26 WB (Basic Analysis)	NW
4677	5	45.322334	I-26 WB (Basic Analysis)	NW
4677	6	45.660115	I-26 WB (Basic Analysis)	NW
4677	7	44.91318	I-26 WB (Basic Analysis)	NW
4677	8	43.907308	I-26 WB (Basic Analysis)	NW
4677	9	46.027773	I-26 WB (Basic Analysis)	NW
4677	10	45.179587	I-26 WB (Basic Analysis)	NW
4687	1	123.070538	I-26 EB (Basic Analysis)	SE
4687	2	126.361089	I-26 EB (Basic Analysis)	SE
4687	3	115.288218	I-26 EB (Basic Analysis)	SE
4687	4	113.741667	I-26 EB (Basic Analysis)	SE
4687	5	123.092019	I-26 EB (Basic Analysis)	SE
4687	6	120.215369	I-26 EB (Basic Analysis)	SE
4687	7	120.896116	I-26 EB (Basic Analysis)	SE
4687	8	119.585843	I-26 EB (Basic Analysis)	SE
4687	9	118.354056	I-26 EB (Basic Analysis)	SE
4687	10	127.46978	I-26 EB (Basic Analysis)	SE
4689	1	31.77391	I-26 WB (Basic Analysis)	NW
4689	2	32.73516	I-26 WB (Basic Analysis)	NW
4689	3	33.061118	I-26 WB (Basic Analysis)	NW
4689	4	30.424834	I-26 WB (Basic Analysis)	NW
4689	5	31.445182	I-26 WB (Basic Analysis)	NW
4689	6	33.095283	I-26 WB (Basic Analysis)	NW
4689	7	31.184786	I-26 WB (Basic Analysis)	NW
4689	8	30.871756	I-26 WB (Basic Analysis)	NW
4689	9	33.36399	I-26 WB (Basic Analysis)	NW
4689	10	32.5117	I-26 WB (Basic Analysis)	NW

No Build AM

ID	Run	Density	Name (Type)	Direction
4700	1	26.608105	I-26 WB (Merge Analysis)	NW
4700	2	24.832312	I-26 WB (Merge Analysis)	NW
4700	3	24.061793	I-26 WB (Merge Analysis)	NW
4700	4	22.854886	I-26 WB (Merge Analysis)	NW
4700	5	25.53658	I-26 WB (Merge Analysis)	NW
4700	6	25.185166	I-26 WB (Merge Analysis)	NW
4700	7	24.410326	I-26 WB (Merge Analysis)	NW
4700	8	24.276386	I-26 WB (Merge Analysis)	NW
4700	9	25.401199	I-26 WB (Merge Analysis)	NW
4700	10	25.932641	I-26 WB (Merge Analysis)	NW
4701	1	37.143349	I-26 WB (Basic Analysis)	NW
4701	2	35.8235	I-26 WB (Basic Analysis)	NW
4701	3	35.566476	I-26 WB (Basic Analysis)	NW
4701	4	28.23089	I-26 WB (Basic Analysis)	NW
4701	5	34.684261	I-26 WB (Basic Analysis)	NW
4701	6	34.892658	I-26 WB (Basic Analysis)	NW
4701	7	34.906551	I-26 WB (Basic Analysis)	NW
4701	8	32.71838	I-26 WB (Basic Analysis)	NW
4701	9	35.205254	I-26 WB (Basic Analysis)	NW
4701	10	32.426623	I-26 WB (Basic Analysis)	NW
4702	1	25.24285	I-26 WB (Diverge Analysis)	NW
4702	2	24.199074	I-26 WB (Diverge Analysis)	NW
4702	3	24.003664	I-26 WB (Diverge Analysis)	NW
4702	4	21.605606	I-26 WB (Diverge Analysis)	NW
4702	5	24.971182	I-26 WB (Diverge Analysis)	NW
4702	6	24.498867	I-26 WB (Diverge Analysis)	NW
4702	7	23.231556	I-26 WB (Diverge Analysis)	NW
4702	8	22.755206	I-26 WB (Diverge Analysis)	NW
4702	9	24.658208	I-26 WB (Diverge Analysis)	NW
4702	10	25.541525	I-26 WB (Diverge Analysis)	NW
4703	1	25.24285	I-26 WB (Diverge Analysis)	NW
4703	2	24.199074	I-26 WB (Diverge Analysis)	NW
4703	3	24.003664	I-26 WB (Diverge Analysis)	NW
4703	4	21.605606	I-26 WB (Diverge Analysis)	NW
4703	5	24.971182	I-26 WB (Diverge Analysis)	NW
4703	6	24.498867	I-26 WB (Diverge Analysis)	NW
4703	7	23.231556	I-26 WB (Diverge Analysis)	NW
4703	8	22.755206	I-26 WB (Diverge Analysis)	NW
4703	9	24.658208	I-26 WB (Diverge Analysis)	NW
4703	10	25.541525	I-26 WB (Diverge Analysis)	NW
4705	1	116.35175	I-26 EB (Merge Analysis)	SE
4705	2	120.120082	I-26 EB (Merge Analysis)	SE
4705	3	105.206774	I-26 EB (Merge Analysis)	SE
4705	4	102.52026	I-26 EB (Merge Analysis)	SE
4705	5	115.72069	I-26 EB (Merge Analysis)	SE
4705	6	108.961584	I-26 EB (Merge Analysis)	SE
4705	7	111.742756	I-26 EB (Merge Analysis)	SE
4705	8	108.952568	I-26 EB (Merge Analysis)	SE
4705	9	112.069556	I-26 EB (Merge Analysis)	SE
4705	10	121.2312	I-26 EB (Merge Analysis)	SE
4706	1	116.35175	I-26 EB (Merge Analysis)	SE
4706	2	120.120082	I-26 EB (Merge Analysis)	SE
4706	3	105.206774	I-26 EB (Merge Analysis)	SE
4706	4	102.52026	I-26 EB (Merge Analysis)	SE
4706	5	115.72069	I-26 EB (Merge Analysis)	SE
4706	6	108.961584	I-26 EB (Merge Analysis)	SE
4706	7	111.742756	I-26 EB (Merge Analysis)	SE
4706	8	108.952568	I-26 EB (Merge Analysis)	SE
4706	9	112.069556	I-26 EB (Merge Analysis)	SE
4706	10	121.2312	I-26 EB (Merge Analysis)	SE
4707	1	114.335432	I-26 EB (Diverge Analysis)	SE
4707	2	119.612498	I-26 EB (Diverge Analysis)	SE
4707	3	104.373835	I-26 EB (Diverge Analysis)	SE
4707	4	100.243703	I-26 EB (Diverge Analysis)	SE

No Build AM

ID	Run	Density	Name (Type)	Direction
4707	5	114.886898	I-26 EB (Diverge Analysis)	SE
4707	6	106.031168	I-26 EB (Diverge Analysis)	SE
4707	7	110.903433	I-26 EB (Diverge Analysis)	SE
4707	8	105.849301	I-26 EB (Diverge Analysis)	SE
4707	9	109.6509	I-26 EB (Diverge Analysis)	SE
4707	10	119.750364	I-26 EB (Diverge Analysis)	SE
4712	1	28.846359	I-26 WB (Basic Analysis)	NW
4712	2	31.520459	I-26 WB (Basic Analysis)	NW
4712	3	30.63344	I-26 WB (Basic Analysis)	NW
4712	4	28.676782	I-26 WB (Basic Analysis)	NW
4712	5	27.513223	I-26 WB (Basic Analysis)	NW
4712	6	29.44901	I-26 WB (Basic Analysis)	NW
4712	7	28.616778	I-26 WB (Basic Analysis)	NW
4712	8	30.748231	I-26 WB (Basic Analysis)	NW
4712	9	31.901355	I-26 WB (Basic Analysis)	NW
4712	10	29.58989	I-26 WB (Basic Analysis)	NW
4714	1	138.710324	I-26 EB (Basic Analysis)	SE
4714	2	135.814104	I-26 EB (Basic Analysis)	SE
4714	3	122.463235	I-26 EB (Basic Analysis)	SE
4714	4	126.883984	I-26 EB (Basic Analysis)	SE
4714	5	132.401572	I-26 EB (Basic Analysis)	SE
4714	6	131.209692	I-26 EB (Basic Analysis)	SE
4714	7	130.268259	I-26 EB (Basic Analysis)	SE
4714	8	134.189395	I-26 EB (Basic Analysis)	SE
4714	9	133.783539	I-26 EB (Basic Analysis)	SE
4714	10	138.547211	I-26 EB (Basic Analysis)	SE
4718	1	129.684877	I-26 EB (Merge Analysis)	SE
4718	2	130.537608	I-26 EB (Merge Analysis)	SE
4718	3	118.26864	I-26 EB (Merge Analysis)	SE
4718	4	120.882619	I-26 EB (Merge Analysis)	SE
4718	5	128.170681	I-26 EB (Merge Analysis)	SE
4718	6	127.608836	I-26 EB (Merge Analysis)	SE
4718	7	121.882785	I-26 EB (Merge Analysis)	SE
4718	8	128.923794	I-26 EB (Merge Analysis)	SE
4718	9	128.132827	I-26 EB (Merge Analysis)	SE
4718	10	131.918316	I-26 EB (Merge Analysis)	SE
4719	1	129.684877	I-26 EB (Merge Analysis)	SE
4719	2	130.537608	I-26 EB (Merge Analysis)	SE
4719	3	118.26864	I-26 EB (Merge Analysis)	SE
4719	4	120.882619	I-26 EB (Merge Analysis)	SE
4719	5	128.170681	I-26 EB (Merge Analysis)	SE
4719	6	127.608836	I-26 EB (Merge Analysis)	SE
4719	7	121.882785	I-26 EB (Merge Analysis)	SE
4719	8	128.923794	I-26 EB (Merge Analysis)	SE
4719	9	128.132827	I-26 EB (Merge Analysis)	SE
4719	10	131.918316	I-26 EB (Merge Analysis)	SE
4720	1	127.462095	I-26 EB (Diverge Analysis)	SE
4720	2	126.555696	I-26 EB (Diverge Analysis)	SE
4720	3	111.519433	I-26 EB (Diverge Analysis)	SE
4720	4	114.669832	I-26 EB (Diverge Analysis)	SE
4720	5	123.595964	I-26 EB (Diverge Analysis)	SE
4720	6	123.202897	I-26 EB (Diverge Analysis)	SE
4720	7	117.063432	I-26 EB (Diverge Analysis)	SE
4720	8	123.657563	I-26 EB (Diverge Analysis)	SE
4720	9	123.088497	I-26 EB (Diverge Analysis)	SE
4720	10	128.943429	I-26 EB (Diverge Analysis)	SE
4725	1	28.918015	I-26 WB (Merge Analysis)	NW
4725	2	27.186957	I-26 WB (Merge Analysis)	NW
4725	3	25.956503	I-26 WB (Merge Analysis)	NW
4725	4	25.119046	I-26 WB (Merge Analysis)	NW
4725	5	27.481705	I-26 WB (Merge Analysis)	NW
4725	6	30.078291	I-26 WB (Merge Analysis)	NW
4725	7	28.150735	I-26 WB (Merge Analysis)	NW
4725	8	26.698051	I-26 WB (Merge Analysis)	NW

ID	Run	Density	Name (Type)	Direction
4725	9	26.12727	I-26 WB (Merge Analysis)	NW
4725	10	30.047881	I-26 WB (Merge Analysis)	NW
4726	1		I-26 WB (Basic Analysis)	NW
4726	2		I-26 WB (Basic Analysis)	NW
4726	3		I-26 WB (Basic Analysis)	NW
4726	4		I-26 WB (Basic Analysis)	NW
4726	5		I-26 WB (Basic Analysis)	NW
4726	6		I-26 WB (Basic Analysis)	NW
4726	7		I-26 WB (Basic Analysis)	NW
4726	8		I-26 WB (Basic Analysis)	NW
4726	9		I-26 WB (Basic Analysis)	NW
4726	10		I-26 WB (Basic Analysis)	NW
4727	1	29.223421	I-26 WB (Diverge Analysis)	NW
4727	2	29.120813	I-26 WB (Diverge Analysis)	NW
4727	3	28.594191	I-26 WB (Diverge Analysis)	NW
4727	4	24.867254	I-26 WB (Diverge Analysis)	NW
4727	5	30.22908	I-26 WB (Diverge Analysis)	NW
4727	6	28.844705	I-26 WB (Diverge Analysis)	NW
4727	7	28.681512	I-26 WB (Diverge Analysis)	NW
4727	8	27.388613	I-26 WB (Diverge Analysis)	NW
4727	9	27.405142	I-26 WB (Diverge Analysis)	NW
4727	10	28.616165	I-26 WB (Diverge Analysis)	NW
4728	1	31.564158	I-26 WB (Basic Analysis)	NW
4728	2	29.968544	I-26 WB (Basic Analysis)	NW
4728	3	32.202404	I-26 WB (Basic Analysis)	NW
4728	4	25.752253	I-26 WB (Basic Analysis)	NW
4728	5	28.169851	I-26 WB (Basic Analysis)	NW
4728	6	32.09603	I-26 WB (Basic Analysis)	NW
4728	7	32.84065	I-26 WB (Basic Analysis)	NW
4728	8	27.957102	I-26 WB (Basic Analysis)	NW
4728	9	30.597119	I-26 WB (Basic Analysis)	NW
4728	10	30.809868	I-26 WB (Basic Analysis)	NW
4729	1	20.739315	I-26 WB (Diverge Analysis)	NW
4729	2	22.459688	I-26 WB (Diverge Analysis)	NW
4729	3	23.172098	I-26 WB (Diverge Analysis)	NW
4729	4	20.84739	I-26 WB (Diverge Analysis)	NW
4729	5	21.337034	I-26 WB (Diverge Analysis)	NW
4729	6	21.22896	I-26 WB (Diverge Analysis)	NW
4729	7	20.053371	I-26 WB (Diverge Analysis)	NW
4729	8	22.027389	I-26 WB (Diverge Analysis)	NW
4729	9	24.089631	I-26 WB (Diverge Analysis)	NW
4729	10	22.616286	I-26 WB (Diverge Analysis)	NW
4730	1	20.739315	I-26 WB (Diverge Analysis)	NW
4730	2	22.459688	I-26 WB (Diverge Analysis)	NW
4730	3	23.172098	I-26 WB (Diverge Analysis)	NW
4730	4	20.84739	I-26 WB (Diverge Analysis)	NW
4730	5	21.337034	I-26 WB (Diverge Analysis)	NW
4730	6	21.22896	I-26 WB (Diverge Analysis)	NW
4730	7	20.053371	I-26 WB (Diverge Analysis)	NW
4730	8	22.027389	I-26 WB (Diverge Analysis)	NW
4730	9	24.089631	I-26 WB (Diverge Analysis)	NW
4730	10	22.616286	I-26 WB (Diverge Analysis)	NW
4732	1	23.851733	I-26 WB (Basic Analysis)	NW
4732	2	25.451879	I-26 WB (Basic Analysis)	NW
4732	3	22.98366	I-26 WB (Basic Analysis)	NW
4732	4	22.480178	I-26 WB (Basic Analysis)	NW
4732	5	25.414262	I-26 WB (Basic Analysis)	NW
4732	6	26.458843	I-26 WB (Basic Analysis)	NW
4732	7	24.109261	I-26 WB (Basic Analysis)	NW

No Build AM

ID	Run	Density	Name (Type)	Direction
4732	8	24.42466	I-26 WB (Basic Analysis)	NW
4732	9	23.66365	I-26 WB (Basic Analysis)	NW
4732	10	25.014949	I-26 WB (Basic Analysis)	NW
4733	1	143.187542	I-26 EB (Basic Analysis)	SE
4733	2	147.657646	I-26 EB (Basic Analysis)	SE
4733	3	133.84592	I-26 EB (Basic Analysis)	SE
4733	4	141.264916	I-26 EB (Basic Analysis)	SE
4733	5	138.557652	I-26 EB (Basic Analysis)	SE
4733	6	141.053168	I-26 EB (Basic Analysis)	SE
4733	7	136.27908	I-26 EB (Basic Analysis)	SE
4733	8	143.382404	I-26 EB (Basic Analysis)	SE
4733	9	144.871138	I-26 EB (Basic Analysis)	SE
4733	10	140.050284	I-26 EB (Basic Analysis)	SE
4736	1	136.144462	I-26 EB (Basic Analysis)	SE
4736	2	138.918203	I-26 EB (Basic Analysis)	SE
4736	3	124.65253	I-26 EB (Basic Analysis)	SE
4736	4	134.787741	I-26 EB (Basic Analysis)	SE
4736	5	131.94365	I-26 EB (Basic Analysis)	SE
4736	6	132.17982	I-26 EB (Basic Analysis)	SE
4736	7	130.069365	I-26 EB (Basic Analysis)	SE
4736	8	132.687336	I-26 EB (Basic Analysis)	SE
4736	9	137.822775	I-26 EB (Basic Analysis)	SE
4736	10	132.91848	I-26 EB (Basic Analysis)	SE
4737	1	117.320646	I-26 EB (Diverge Analysis)	SE
4737	2	120.01364	I-26 EB (Diverge Analysis)	SE
4737	3	106.983503	I-26 EB (Diverge Analysis)	SE
4737	4	116.245919	I-26 EB (Diverge Analysis)	SE
4737	5	114.224939	I-26 EB (Diverge Analysis)	SE
4737	6	114.514003	I-26 EB (Diverge Analysis)	SE
4737	7	113.64928	I-26 EB (Diverge Analysis)	SE
4737	8	115.603553	I-26 EB (Diverge Analysis)	SE
4737	9	122.190271	I-26 EB (Diverge Analysis)	SE
4737	10	114.259527	I-26 EB (Diverge Analysis)	SE
4739	1	20.975418	I-26 WB (Weaving Analysis)	NW
4739	2	19.65023	I-26 WB (Weaving Analysis)	NW
4739	3	20.752072	I-26 WB (Weaving Analysis)	NW
4739	4	17.844314	I-26 WB (Weaving Analysis)	NW
4739	5	20.492565	I-26 WB (Weaving Analysis)	NW
4739	6	20.092668	I-26 WB (Weaving Analysis)	NW
4739	7	19.97355	I-26 WB (Weaving Analysis)	NW
4739	8	19.592798	I-26 WB (Weaving Analysis)	NW
4739	9	20.537234	I-26 WB (Weaving Analysis)	NW
4739	10	20.726546	I-26 WB (Weaving Analysis)	NW
4741	1	27.742574	I-26 WB (Basic Analysis)	NW
4741	2	26.788721	I-26 WB (Basic Analysis)	NW
4741	3	24.889098	I-26 WB (Basic Analysis)	NW
4741	4	21.582947	I-26 WB (Basic Analysis)	NW
4741	5	26.934224	I-26 WB (Basic Analysis)	NW
4741	6	24.484923	I-26 WB (Basic Analysis)	NW
4741	7	24.50109	I-26 WB (Basic Analysis)	NW
4741	8	24.590009	I-26 WB (Basic Analysis)	NW
4741	9	25.325607	I-26 WB (Basic Analysis)	NW
4741	10	21.679949	I-26 WB (Basic Analysis)	NW
4742	1	17.492531	I-26 WB (Diverge Analysis)	NW
4742	2	17.474083	I-26 WB (Diverge Analysis)	NW
4742	3	18.965999	I-26 WB (Diverge Analysis)	NW
4742	4	16.637043	I-26 WB (Diverge Analysis)	NW

No Build AM

ID	Run	Density	Name (Type)	Direction
4742	5	18.968304	I-26 WB (Diverge Analysis)	NW
4742	6	18.587831	I-26 WB (Diverge Analysis)	NW
4742	7	17.743873	I-26 WB (Diverge Analysis)	NW
4742	8	15.580942	I-26 WB (Diverge Analysis)	NW
4742	9	17.372624	I-26 WB (Diverge Analysis)	NW
4742	10	17.972157	I-26 WB (Diverge Analysis)	NW
4745	1	139.812958	I-26 EB (Basic Analysis)	SE
4745	2	147.149946	I-26 EB (Basic Analysis)	SE
4745	3	133.762998	I-26 EB (Basic Analysis)	SE
4745	4	145.574827	I-26 EB (Basic Analysis)	SE
4745	5	144.190725	I-26 EB (Basic Analysis)	SE
4745	6	140.580164	I-26 EB (Basic Analysis)	SE
4745	7	147.149945	I-26 EB (Basic Analysis)	SE
4745	8	135.619948	I-26 EB (Basic Analysis)	SE
4745	9	147.826338	I-26 EB (Basic Analysis)	SE
4745	10	142.878648	I-26 EB (Basic Analysis)	SE
4748	1	132.022044	I-26 EB (Weaving Analysis)	SE
4748	2	138.48314	I-26 EB (Weaving Analysis)	SE
4748	3	126.804686	I-26 EB (Weaving Analysis)	SE
4748	4	136.994733	I-26 EB (Weaving Analysis)	SE
4748	5	134.004323	I-26 EB (Weaving Analysis)	SE
4748	6	133.732468	I-26 EB (Weaving Analysis)	SE
4748	7	133.542169	I-26 EB (Weaving Analysis)	SE
4748	8	128.653303	I-26 EB (Weaving Analysis)	SE
4748	9	137.194093	I-26 EB (Weaving Analysis)	SE
4748	10	133.449284	I-26 EB (Weaving Analysis)	SE
4753	1	20.611359	I-26 WB (Basic Analysis)	NW
4753	2	21.28109	I-26 WB (Basic Analysis)	NW
4753	3	21.460388	I-26 WB (Basic Analysis)	NW
4753	4	18.900118	I-26 WB (Basic Analysis)	NW
4753	5	19.002951	I-26 WB (Basic Analysis)	NW
4753	6	19.451196	I-26 WB (Basic Analysis)	NW
4753	7	21.035874	I-26 WB (Basic Analysis)	NW
4753	8	21.38656	I-26 WB (Basic Analysis)	NW
4753	9	23.751711	I-26 WB (Basic Analysis)	NW
4753	10	21.979825	I-26 WB (Basic Analysis)	NW
4755	1	132.316468	I-26 EB (Basic Analysis)	SE
4755	2	134.298331	I-26 EB (Basic Analysis)	SE
4755	3	126.747186	I-26 EB (Basic Analysis)	SE
4755	4	130.886518	I-26 EB (Basic Analysis)	SE
4755	5	131.29209	I-26 EB (Basic Analysis)	SE
4755	6	132.224484	I-26 EB (Basic Analysis)	SE
4755	7	129.83287	I-26 EB (Basic Analysis)	SE
4755	8	126.053116	I-26 EB (Basic Analysis)	SE
4755	9	134.653727	I-26 EB (Basic Analysis)	SE
4755	10	130.046108	I-26 EB (Basic Analysis)	SE
4756	1	116.385901	I-26 EB (Diverge Analysis)	SE
4756	2	119.078455	I-26 EB (Diverge Analysis)	SE
4756	3	111.090145	I-26 EB (Diverge Analysis)	SE
4756	4	116.525963	I-26 EB (Diverge Analysis)	SE
4756	5	115.325784	I-26 EB (Diverge Analysis)	SE
4756	6	116.695001	I-26 EB (Diverge Analysis)	SE
4756	7	118.052145	I-26 EB (Diverge Analysis)	SE
4756	8	112.753973	I-26 EB (Diverge Analysis)	SE
4756	9	121.828964	I-26 EB (Diverge Analysis)	SE
4756	10	114.321209	I-26 EB (Diverge Analysis)	SE
4760	1	16.173466	I-26 WB (Basic Analysis)	NW

No Build AM

ID	Run	Density	Name (Type)	Direction
4760	2	16.387979	I-26 WB (Basic Analysis)	NW
4760	3	16.257682	I-26 WB (Basic Analysis)	NW
4760	4	14.675849	I-26 WB (Basic Analysis)	NW
4760	5	16.463455	I-26 WB (Basic Analysis)	NW
4760	6	17.067269	I-26 WB (Basic Analysis)	NW
4760	7	15.254239	I-26 WB (Basic Analysis)	NW
4760	8	16.33157	I-26 WB (Basic Analysis)	NW
4760	9	16.353816	I-26 WB (Basic Analysis)	NW
4760	10	16.046347	I-26 WB (Basic Analysis)	NW
4761	1	16.173466	I-26 WB (Basic Analysis)	NW
4761	2	16.387979	I-26 WB (Basic Analysis)	NW
4761	3	16.257682	I-26 WB (Basic Analysis)	NW
4761	4	14.675849	I-26 WB (Basic Analysis)	NW
4761	5	16.463455	I-26 WB (Basic Analysis)	NW
4761	6	17.067269	I-26 WB (Basic Analysis)	NW
4761	7	15.254239	I-26 WB (Basic Analysis)	NW
4761	8	16.33157	I-26 WB (Basic Analysis)	NW
4761	9	16.353816	I-26 WB (Basic Analysis)	NW
4761	10	16.046347	I-26 WB (Basic Analysis)	NW
4764	1	14.73989	I-26 WB (Basic Analysis)	NW
4764	2	14.997306	I-26 WB (Basic Analysis)	NW
4764	3	15.159383	I-26 WB (Basic Analysis)	NW
4764	4	13.815857	I-26 WB (Basic Analysis)	NW
4764	5	14.989072	I-26 WB (Basic Analysis)	NW
4764	6	15.169675	I-26 WB (Basic Analysis)	NW
4764	7	14.806736	I-26 WB (Basic Analysis)	NW
4764	8	14.703163	I-26 WB (Basic Analysis)	NW
4764	9	15.354503	I-26 WB (Basic Analysis)	NW
4764	10	15.335869	I-26 WB (Basic Analysis)	NW
4768	1	73.313244	I-26 EB (Basic Analysis)	SE
4768	2	67.62363	I-26 EB (Basic Analysis)	SE
4768	3	66.625843	I-26 EB (Basic Analysis)	SE
4768	4	74.422801	I-26 EB (Basic Analysis)	SE
4768	5	69.533154	I-26 EB (Basic Analysis)	SE
4768	6	63.980267	I-26 EB (Basic Analysis)	SE
4768	7	69.208154	I-26 EB (Basic Analysis)	SE
4768	8	64.050259	I-26 EB (Basic Analysis)	SE
4768	9	73.814254	I-26 EB (Basic Analysis)	SE
4768	10	67.686569	I-26 EB (Basic Analysis)	SE
4769	1	103.599257	I-26 EB (Diverge Analysis)	SE
4769	2	107.498392	I-26 EB (Diverge Analysis)	SE
4769	3	97.389813	I-26 EB (Diverge Analysis)	SE
4769	4	99.515193	I-26 EB (Diverge Analysis)	SE
4769	5	99.809517	I-26 EB (Diverge Analysis)	SE
4769	6	99.267754	I-26 EB (Diverge Analysis)	SE
4769	7	98.358736	I-26 EB (Diverge Analysis)	SE
4769	8	101.494713	I-26 EB (Diverge Analysis)	SE
4769	9	103.383072	I-26 EB (Diverge Analysis)	SE
4769	10	100.405977	I-26 EB (Diverge Analysis)	SE
6149	1	16.025965	I-26 EB (Merge Analysis)	S
6149	2	14.499894	I-26 EB (Merge Analysis)	S
6149	3	15.567996	I-26 EB (Merge Analysis)	S
6149	4	15.971304	I-26 EB (Merge Analysis)	S
6149	5	14.948999	I-26 EB (Merge Analysis)	S
6149	6	14.479211	I-26 EB (Merge Analysis)	S
6149	7	14.95934	I-26 EB (Merge Analysis)	S
6149	8	15.237077	I-26 EB (Merge Analysis)	S

No Build AM

ID	Run	Density	Name (Type)	Direction
6149	9	15.51629	I-26 EB (Merge Analysis)	S
6149	10	15.504471	I-26 EB (Merge Analysis)	S
6150	1	16.025965	I-26 EB (Merge Analysis)	S
6150	2	14.499894	I-26 EB (Merge Analysis)	S
6150	3	15.567996	I-26 EB (Merge Analysis)	S
6150	4	15.971304	I-26 EB (Merge Analysis)	S
6150	5	14.948999	I-26 EB (Merge Analysis)	S
6150	6	14.479211	I-26 EB (Merge Analysis)	S
6150	7	14.95934	I-26 EB (Merge Analysis)	S
6150	8	15.237077	I-26 EB (Merge Analysis)	S
6150	9	15.51629	I-26 EB (Merge Analysis)	S
6150	10	15.504471	I-26 EB (Merge Analysis)	S
6151	1	19.943197	I-26 EB (Basic Analysis)	S
6151	2	21.201796	I-26 EB (Basic Analysis)	S
6151	3	20.442166	I-26 EB (Basic Analysis)	S
6151	4	19.837138	I-26 EB (Basic Analysis)	S
6151	5	20.081546	I-26 EB (Basic Analysis)	S
6151	6	21.2418	I-26 EB (Basic Analysis)	S
6151	7	19.512173	I-26 EB (Basic Analysis)	S
6151	8	20.004107	I-26 EB (Basic Analysis)	S
6151	9	20.263014	I-26 EB (Basic Analysis)	S
6151	10	19.71707	I-26 EB (Basic Analysis)	S
6152	1	19.943197	I-26 EB (Basic Analysis)	S
6152	2	21.201796	I-26 EB (Basic Analysis)	S
6152	3	20.442166	I-26 EB (Basic Analysis)	S
6152	4	19.837138	I-26 EB (Basic Analysis)	S
6152	5	20.081546	I-26 EB (Basic Analysis)	S
6152	6	21.2418	I-26 EB (Basic Analysis)	S
6152	7	19.512173	I-26 EB (Basic Analysis)	S
6152	8	20.004107	I-26 EB (Basic Analysis)	S
6152	9	20.263014	I-26 EB (Basic Analysis)	S
6152	10	19.71707	I-26 EB (Basic Analysis)	S
6159	1	47.061297	I-26 WB (Diverge Analysis)	N
6159	2	31.891294	I-26 WB (Diverge Analysis)	N
6159	3	30.935851	I-26 WB (Diverge Analysis)	N
6159	4	75.927371	I-26 WB (Diverge Analysis)	N
6159	5	70.573129	I-26 WB (Diverge Analysis)	N
6159	6	41.665242	I-26 WB (Diverge Analysis)	N
6159	7	55.957157	I-26 WB (Diverge Analysis)	N
6159	8	76.81173	I-26 WB (Diverge Analysis)	N
6159	9	33.984069	I-26 WB (Diverge Analysis)	N
6159	10	29.382473	I-26 WB (Diverge Analysis)	N
6160	1	47.061297	I-26 WB (Diverge Analysis)	N
6160	2	31.891294	I-26 WB (Diverge Analysis)	N
6160	3	30.935851	I-26 WB (Diverge Analysis)	N
6160	4	75.927371	I-26 WB (Diverge Analysis)	N
6160	5	70.573129	I-26 WB (Diverge Analysis)	N
6160	6	41.665242	I-26 WB (Diverge Analysis)	N
6160	7	55.957157	I-26 WB (Diverge Analysis)	N
6160	8	76.81173	I-26 WB (Diverge Analysis)	N
6160	9	33.984069	I-26 WB (Diverge Analysis)	N
6160	10	29.382473	I-26 WB (Diverge Analysis)	N
6165	1	22.071414	I-26 WB (Basic Analysis)	N
6165	2	22.037133	I-26 WB (Basic Analysis)	N
6165	3	22.710188	I-26 WB (Basic Analysis)	N
6165	4	22.842743	I-26 WB (Basic Analysis)	N
6165	5	21.430355	I-26 WB (Basic Analysis)	N

No Build AM

ID	Run	Density	Name (Type)	Direction
6165	6	21.942288	I-26 WB (Basic Analysis)	N
6165	7	22.278244	I-26 WB (Basic Analysis)	N
6165	8	23.043859	I-26 WB (Basic Analysis)	N
6165	9	20.620174	I-26 WB (Basic Analysis)	N
6165	10	20.767584	I-26 WB (Basic Analysis)	N
6166	1	15.770258	I-26 EB (Basic Analysis)	S
6166	2	16.434473	I-26 EB (Basic Analysis)	S
6166	3	16.28543	I-26 EB (Basic Analysis)	S
6166	4	16.208478	I-26 EB (Basic Analysis)	S
6166	5	16.105606	I-26 EB (Basic Analysis)	S
6166	6	16.217388	I-26 EB (Basic Analysis)	S
6166	7	16.347801	I-26 EB (Basic Analysis)	S
6166	8	15.807518	I-26 EB (Basic Analysis)	S
6166	9	15.529682	I-26 EB (Basic Analysis)	S
6166	10	16.789261	I-26 EB (Basic Analysis)	S
6174	1	19.014906	I-26 WB (Basic Analysis)	N
6174	2	19.28489	I-26 WB (Basic Analysis)	N
6174	3	20.524076	I-26 WB (Basic Analysis)	N
6174	4	20.093261	I-26 WB (Basic Analysis)	N
6174	5	20.220343	I-26 WB (Basic Analysis)	N
6174	6	20.183432	I-26 WB (Basic Analysis)	N
6174	7	19.390353	I-26 WB (Basic Analysis)	N
6174	8	19.992017	I-26 WB (Basic Analysis)	N
6174	9	20.182904	I-26 WB (Basic Analysis)	N
6174	10	19.932431	I-26 WB (Basic Analysis)	N
6175	1	19.014906	I-26 WB (Basic Analysis)	N
6175	2	19.28489	I-26 WB (Basic Analysis)	N
6175	3	20.524076	I-26 WB (Basic Analysis)	N
6175	4	20.093261	I-26 WB (Basic Analysis)	N
6175	5	20.220343	I-26 WB (Basic Analysis)	N
6175	6	20.183432	I-26 WB (Basic Analysis)	N
6175	7	19.390353	I-26 WB (Basic Analysis)	N
6175	8	19.992017	I-26 WB (Basic Analysis)	N
6175	9	20.182904	I-26 WB (Basic Analysis)	N
6175	10	19.932431	I-26 WB (Basic Analysis)	N
6177	1	25.140106	I-26 EB (Basic Analysis)	S
6177	2	23.964578	I-26 EB (Basic Analysis)	S
6177	3	25.292947	I-26 EB (Basic Analysis)	S
6177	4	26.261689	I-26 EB (Basic Analysis)	S
6177	5	24.587181	I-26 EB (Basic Analysis)	S
6177	6	23.746555	I-26 EB (Basic Analysis)	S
6177	7	25.158087	I-26 EB (Basic Analysis)	S
6177	8	25.295195	I-26 EB (Basic Analysis)	S
6177	9	25.268222	I-26 EB (Basic Analysis)	S
6177	10	26.843834	I-26 EB (Basic Analysis)	S
6178	1	45.357597	I-26 EB (Diverge Analysis)	S
6178	2	68.535593	I-26 EB (Diverge Analysis)	S
6178	3	50.134701	I-26 EB (Diverge Analysis)	S
6178	4	59.348249	I-26 EB (Diverge Analysis)	S
6178	5	49.175612	I-26 EB (Diverge Analysis)	S
6178	6	64.686133	I-26 EB (Diverge Analysis)	S
6178	7	55.585265	I-26 EB (Diverge Analysis)	S
6178	8	33.969064	I-26 EB (Diverge Analysis)	S
6178	9	47.246951	I-26 EB (Diverge Analysis)	S
6178	10	72.374572	I-26 EB (Diverge Analysis)	S
6185	1	37.89488	I-26 EB (Merge Analysis)	S
6185	2	38.940513	I-26 EB (Merge Analysis)	S

No Build AM

ID	Run	Density	Name (Type)	Direction
6185	3	36.995349	I-26 EB (Merge Analysis)	S
6185	4	40.940107	I-26 EB (Merge Analysis)	S
6185	5	39.948904	I-26 EB (Merge Analysis)	S
6185	6	38.098277	I-26 EB (Merge Analysis)	S
6185	7	40.819787	I-26 EB (Merge Analysis)	S
6185	8	37.003943	I-26 EB (Merge Analysis)	S
6185	9	35.737725	I-26 EB (Merge Analysis)	S
6185	10	39.570757	I-26 EB (Merge Analysis)	S
6186	1	35.605526	I-26 EB (Basic Analysis)	S
6186	2	36.587528	I-26 EB (Basic Analysis)	S
6186	3	36.139569	I-26 EB (Basic Analysis)	S
6186	4	37.988793	I-26 EB (Basic Analysis)	S
6186	5	37.677932	I-26 EB (Basic Analysis)	S
6186	6	36.010443	I-26 EB (Basic Analysis)	S
6186	7	38.387333	I-26 EB (Basic Analysis)	S
6186	8	35.611903	I-26 EB (Basic Analysis)	S
6186	9	34.583671	I-26 EB (Basic Analysis)	S
6186	10	37.53127	I-26 EB (Basic Analysis)	S
6200	1	32.153556	I-26 WB (Weaving Analysis)	NW
6200	2	32.470421	I-26 WB (Weaving Analysis)	NW
6200	3	33.303414	I-26 WB (Weaving Analysis)	NW
6200	4	31.121298	I-26 WB (Weaving Analysis)	NW
6200	5	31.759926	I-26 WB (Weaving Analysis)	NW
6200	6	32.292389	I-26 WB (Weaving Analysis)	NW
6200	7	32.383855	I-26 WB (Weaving Analysis)	NW
6200	8	31.348329	I-26 WB (Weaving Analysis)	NW
6200	9	29.88814	I-26 WB (Weaving Analysis)	NW
6200	10	32.331589	I-26 WB (Weaving Analysis)	NW
6204	1	33.305516	I-26 WB (Basic Analysis)	NW
6204	2	32.134903	I-26 WB (Basic Analysis)	NW
6204	3	33.069822	I-26 WB (Basic Analysis)	NW
6204	4	32.855733	I-26 WB (Basic Analysis)	NW
6204	5	32.164365	I-26 WB (Basic Analysis)	NW
6204	6	32.136867	I-26 WB (Basic Analysis)	NW
6204	7	31.514242	I-26 WB (Basic Analysis)	NW
6204	8	31.239266	I-26 WB (Basic Analysis)	NW
6204	9	33.425327	I-26 WB (Basic Analysis)	NW
6204	10	34.597905	I-26 WB (Basic Analysis)	NW
6205	1	31.603392	I-20 EB (Basic Analysis)	E
6205	2	29.72121	I-20 EB (Basic Analysis)	E
6205	3	31.200857	I-20 EB (Basic Analysis)	E
6205	4	32.328839	I-20 EB (Basic Analysis)	E
6205	5	29.382816	I-20 EB (Basic Analysis)	E
6205	6	28.874118	I-20 EB (Basic Analysis)	E
6205	7	30.227696	I-20 EB (Basic Analysis)	E
6205	8	31.258362	I-20 EB (Basic Analysis)	E
6205	9	29.982194	I-20 EB (Basic Analysis)	E
6205	10	31.096906	I-20 EB (Basic Analysis)	E
6206	1	26.656012	I-20 EB (Merge Analysis)	E
6206	2	27.096607	I-20 EB (Merge Analysis)	E
6206	3	27.822293	I-20 EB (Merge Analysis)	E
6206	4	26.981599	I-20 EB (Merge Analysis)	E
6206	5	27.295847	I-20 EB (Merge Analysis)	E
6206	6	27.840111	I-20 EB (Merge Analysis)	E
6206	7	26.929764	I-20 EB (Merge Analysis)	E
6206	8	26.915185	I-20 EB (Merge Analysis)	E
6206	9	26.641433	I-20 EB (Merge Analysis)	E

ID	Run	Density	Name (Type)	Direction
6206	10	26.730524	I-20 EB (Merge Analysis)	E
6207	1	26.656012	I-20 EB (Merge Analysis)	E
6207	2	27.096607	I-20 EB (Merge Analysis)	E
6207	3	27.822293	I-20 EB (Merge Analysis)	E
6207	4	26.981599	I-20 EB (Merge Analysis)	E
6207	5	27.295847	I-20 EB (Merge Analysis)	E
6207	6	27.840111	I-20 EB (Merge Analysis)	E
6207	7	26.929764	I-20 EB (Merge Analysis)	E
6207	8	26.915185	I-20 EB (Merge Analysis)	E
6207	9	26.641433	I-20 EB (Merge Analysis)	E
6207	10	26.730524	I-20 EB (Merge Analysis)	E
6208	1	27.630287	I-20 EB (Diverge Analysis)	E
6208	2	27.755764	I-20 EB (Diverge Analysis)	E
6208	3	28.783478	I-20 EB (Diverge Analysis)	E
6208	4	27.966386	I-20 EB (Diverge Analysis)	E
6208	5	28.196426	I-20 EB (Diverge Analysis)	E
6208	6	28.457836	I-20 EB (Diverge Analysis)	E
6208	7	27.808046	I-20 EB (Diverge Analysis)	E
6208	8	27.800577	I-20 EB (Diverge Analysis)	E
6208	9	27.706469	I-20 EB (Diverge Analysis)	E
6208	10	27.603399	I-20 EB (Diverge Analysis)	E
6209	1	27.630287	I-20 EB (Diverge Analysis)	E
6209	2	27.755764	I-20 EB (Diverge Analysis)	E
6209	3	28.783478	I-20 EB (Diverge Analysis)	E
6209	4	27.966386	I-20 EB (Diverge Analysis)	E
6209	5	28.196426	I-20 EB (Diverge Analysis)	E
6209	6	28.457836	I-20 EB (Diverge Analysis)	E
6209	7	27.808046	I-20 EB (Diverge Analysis)	E
6209	8	27.800577	I-20 EB (Diverge Analysis)	E
6209	9	27.706469	I-20 EB (Diverge Analysis)	E
6209	10	27.603399	I-20 EB (Diverge Analysis)	E
6216	1	20.840271	I-20 EB (Merge Analysis)	E
6216	2	20.481762	I-20 EB (Merge Analysis)	E
6216	3	21.097462	I-20 EB (Merge Analysis)	E
6216	4	20.926001	I-20 EB (Merge Analysis)	E
6216	5	20.770128	I-20 EB (Merge Analysis)	E
6216	6	20.91561	I-20 EB (Merge Analysis)	E
6216	7	20.577884	I-20 EB (Merge Analysis)	E
6216	8	20.375249	I-20 EB (Merge Analysis)	E
6216	9	21.016927	I-20 EB (Merge Analysis)	E
6216	10	20.481762	I-20 EB (Merge Analysis)	E
6217	1	23.502565	I-20 EB (Basic Analysis)	E
6217	2	24.436051	I-20 EB (Basic Analysis)	E
6217	3	25.133211	I-20 EB (Basic Analysis)	E
6217	4	25.224787	I-20 EB (Basic Analysis)	E
6217	5	26.725454	I-20 EB (Basic Analysis)	E
6217	6	24.468546	I-20 EB (Basic Analysis)	E
6217	7	22.90289	I-20 EB (Basic Analysis)	E
6217	8	24.220404	I-20 EB (Basic Analysis)	E
6217	9	25.198201	I-20 EB (Basic Analysis)	E
6217	10	24.196772	I-20 EB (Basic Analysis)	E
6220	1	18.375564	I-20 WB (Basic Analysis)	W
6220	2	28.872613	I-20 WB (Basic Analysis)	W
6220	3	19.250492	I-20 WB (Basic Analysis)	W
6220	4	18.265157	I-20 WB (Basic Analysis)	W
6220	5	18.858858	I-20 WB (Basic Analysis)	W
6220	6	17.927685	I-20 WB (Basic Analysis)	W

No Build AM

ID	Run	Density	Name (Type)	Direction
6220	7	47.104439	I-20 WB (Basic Analysis)	W
6220	8	18.47139	I-20 WB (Basic Analysis)	W
6220	9	18.015177	I-20 WB (Basic Analysis)	W
6220	10	18.86719	I-20 WB (Basic Analysis)	W
6223	1	60.266105	I-26 EB (Weaving Analysis)	SE
6223	2	68.422617	I-26 EB (Weaving Analysis)	SE
6223	3	67.753247	I-26 EB (Weaving Analysis)	SE
6223	4	54.434428	I-26 EB (Weaving Analysis)	SE
6223	5	65.353313	I-26 EB (Weaving Analysis)	SE
6223	6	62.701956	I-26 EB (Weaving Analysis)	SE
6223	7	59.916727	I-26 EB (Weaving Analysis)	SE
6223	8	54.365858	I-26 EB (Weaving Analysis)	SE
6223	9	61.053022	I-26 EB (Weaving Analysis)	SE
6223	10	61.000779	I-26 EB (Weaving Analysis)	SE
6227	1	24.480014	I-20 WB (Basic Analysis)	W
6227	2	24.788077	I-20 WB (Basic Analysis)	W
6227	3	23.121236	I-20 WB (Basic Analysis)	W
6227	4	22.593128	I-20 WB (Basic Analysis)	W
6227	5	25.789282	I-20 WB (Basic Analysis)	W
6227	6	23.748364	I-20 WB (Basic Analysis)	W
6227	7	27.43687	I-20 WB (Basic Analysis)	W
6227	8	23.4348	I-20 WB (Basic Analysis)	W
6227	9	25.228168	I-20 WB (Basic Analysis)	W
6227	10	24.268221	I-20 WB (Basic Analysis)	W
6229	1	71.538179	I-20 WB (Merge Analysis)	W
6229	2	79.431679	I-20 WB (Merge Analysis)	W
6229	3	72.642913	I-20 WB (Merge Analysis)	W
6229	4	71.199632	I-20 WB (Merge Analysis)	W
6229	5	77.404849	I-20 WB (Merge Analysis)	W
6229	6	66.152603	I-20 WB (Merge Analysis)	W
6229	7	69.081484	I-20 WB (Merge Analysis)	W
6229	8	74.894699	I-20 WB (Merge Analysis)	W
6229	9	77.335803	I-20 WB (Merge Analysis)	W
6229	10	70.3644	I-20 WB (Merge Analysis)	W
6230	1	71.538179	I-20 WB (Merge+Diverge Analysis)	W
6230	2	79.431679	I-20 WB (Merge+Diverge Analysis)	W
6230	3	72.642913	I-20 WB (Merge+Diverge Analysis)	W
6230	4	71.199632	I-20 WB (Merge+Diverge Analysis)	W
6230	5	77.404849	I-20 WB (Merge+Diverge Analysis)	W
6230	6	66.152603	I-20 WB (Merge+Diverge Analysis)	W
6230	7	69.081484	I-20 WB (Merge+Diverge Analysis)	W
6230	8	74.894699	I-20 WB (Merge+Diverge Analysis)	W
6230	9	77.335803	I-20 WB (Merge+Diverge Analysis)	W
6230	10	70.3644	I-20 WB (Merge+Diverge Analysis)	W
6231	1	72.207599	I-20 WB (Diverge Analysis)	W
6231	2	80.174961	I-20 WB (Diverge Analysis)	W
6231	3	73.32267	I-20 WB (Diverge Analysis)	W
6231	4	71.865883	I-20 WB (Diverge Analysis)	W
6231	5	78.17445	I-20 WB (Diverge Analysis)	W
6231	6	66.771627	I-20 WB (Diverge Analysis)	W
6231	7	69.773199	I-20 WB (Diverge Analysis)	W
6231	8	75.595527	I-20 WB (Diverge Analysis)	W
6231	9	78.059474	I-20 WB (Diverge Analysis)	W
6231	10	71.022836	I-20 WB (Diverge Analysis)	W
6234	1	37.18518	I-20 WB (Basic Analysis)	W
6234	2	41.503547	I-20 WB (Basic Analysis)	W
6234	3	38.392428	I-20 WB (Basic Analysis)	W

No Build AM

ID	Run	Density	Name (Type)	Direction
6234	4	35.801545	I-20 WB (Basic Analysis)	W
6234	5	40.730744	I-20 WB (Basic Analysis)	W
6234	6	34.636849	I-20 WB (Basic Analysis)	W
6234	7	37.646391	I-20 WB (Basic Analysis)	W
6234	8	38.950412	I-20 WB (Basic Analysis)	W
6234	9	40.666915	I-20 WB (Basic Analysis)	W
6234	10	35.57643	I-20 WB (Basic Analysis)	W
6238	1	31.299839	I-20 EB (Basic Analysis)	NE
6238	2	29.850434	I-20 EB (Basic Analysis)	NE
6238	3	31.405472	I-20 EB (Basic Analysis)	NE
6238	4	31.33031	I-20 EB (Basic Analysis)	NE
6238	5	30.593927	I-20 EB (Basic Analysis)	NE
6238	6	30.628461	I-20 EB (Basic Analysis)	NE
6238	7	30.832617	I-20 EB (Basic Analysis)	NE
6238	8	31.412582	I-20 EB (Basic Analysis)	NE
6238	9	30.400944	I-20 EB (Basic Analysis)	NE
6238	10	30.729016	I-20 EB (Basic Analysis)	NE
6241	1	38.032039	I-20 EB (Merge Analysis)	NE
6241	2	37.946209	I-20 EB (Merge Analysis)	NE
6241	3	37.871109	I-20 EB (Merge Analysis)	NE
6241	4	38.287144	I-20 EB (Merge Analysis)	NE
6241	5	36.662342	I-20 EB (Merge Analysis)	NE
6241	6	38.672185	I-20 EB (Merge Analysis)	NE
6241	7	35.904181	I-20 EB (Merge Analysis)	NE
6241	8	37.680376	I-20 EB (Merge Analysis)	NE
6241	9	36.535982	I-20 EB (Merge Analysis)	NE
6241	10	36.320216	I-20 EB (Merge Analysis)	NE
6242	1	38.032039	I-20 EB (Merge Analysis)	NE
6242	2	37.946209	I-20 EB (Merge Analysis)	NE
6242	3	37.871109	I-20 EB (Merge Analysis)	NE
6242	4	38.287144	I-20 EB (Merge Analysis)	NE
6242	5	36.662342	I-20 EB (Merge Analysis)	NE
6242	6	38.672185	I-20 EB (Merge Analysis)	NE
6242	7	35.904181	I-20 EB (Merge Analysis)	NE
6242	8	37.680376	I-20 EB (Merge Analysis)	NE
6242	9	36.535982	I-20 EB (Merge Analysis)	NE
6242	10	36.320216	I-20 EB (Merge Analysis)	NE
6246	1	38.955442	I-20 WB (Merge Analysis)	SW
6246	2	30.439198	I-20 WB (Merge Analysis)	SW
6246	3	29.337441	I-20 WB (Merge Analysis)	SW
6246	4	28.152886	I-20 WB (Merge Analysis)	SW
6246	5	30.942667	I-20 WB (Merge Analysis)	SW
6246	6	32.250085	I-20 WB (Merge Analysis)	SW
6246	7	30.878565	I-20 WB (Merge Analysis)	SW
6246	8	29.46431	I-20 WB (Merge Analysis)	SW
6246	9	31.966967	I-20 WB (Merge Analysis)	SW
6246	10	30.477926	I-20 WB (Merge Analysis)	SW
6247	1	38.955442	I-20 WB (Merge Analysis)	SW
6247	2	30.439198	I-20 WB (Merge Analysis)	SW
6247	3	29.337441	I-20 WB (Merge Analysis)	SW
6247	4	28.152886	I-20 WB (Merge Analysis)	SW
6247	5	30.942667	I-20 WB (Merge Analysis)	SW
6247	6	32.250085	I-20 WB (Merge Analysis)	SW
6247	7	30.878565	I-20 WB (Merge Analysis)	SW
6247	8	29.46431	I-20 WB (Merge Analysis)	SW
6247	9	31.966967	I-20 WB (Merge Analysis)	SW
6247	10	30.477926	I-20 WB (Merge Analysis)	SW

No Build AM

ID	Run	Density	Name (Type)	Direction
6249	1	25.860261	I-20 WB (Diverge Analysis)	SW
6249	2	26.237683	I-20 WB (Diverge Analysis)	SW
6249	3	24.950927	I-20 WB (Diverge Analysis)	SW
6249	4	26.241594	I-20 WB (Diverge Analysis)	SW
6249	5	26.750038	I-20 WB (Diverge Analysis)	SW
6249	6	27.041416	I-20 WB (Diverge Analysis)	SW
6249	7	27.512705	I-20 WB (Diverge Analysis)	SW
6249	8	25.38115	I-20 WB (Diverge Analysis)	SW
6249	9	26.094927	I-20 WB (Diverge Analysis)	SW
6249	10	25.212972	I-20 WB (Diverge Analysis)	SW
6251	1	39.353373	I-20 WB (Basic Analysis)	SW
6251	2	34.077943	I-20 WB (Basic Analysis)	SW
6251	3	34.697632	I-20 WB (Basic Analysis)	SW
6251	4	33.941338	I-20 WB (Basic Analysis)	SW
6251	5	35.624061	I-20 WB (Basic Analysis)	SW
6251	6	36.30336	I-20 WB (Basic Analysis)	SW
6251	7	35.586806	I-20 WB (Basic Analysis)	SW
6251	8	32.828629	I-20 WB (Basic Analysis)	SW
6251	9	37.198743	I-20 WB (Basic Analysis)	SW
6251	10	33.7563	I-20 WB (Basic Analysis)	SW
6254	1	34.165007	I-20 EB (Basic Analysis)	NE
6254	2	33.474438	I-20 EB (Basic Analysis)	NE
6254	3	34.345482	I-20 EB (Basic Analysis)	NE
6254	4	34.509665	I-20 EB (Basic Analysis)	NE
6254	5	33.435585	I-20 EB (Basic Analysis)	NE
6254	6	34.261511	I-20 EB (Basic Analysis)	NE
6254	7	34.913228	I-20 EB (Basic Analysis)	NE
6254	8	33.592248	I-20 EB (Basic Analysis)	NE
6254	9	33.309002	I-20 EB (Basic Analysis)	NE
6254	10	33.177405	I-20 EB (Basic Analysis)	NE
6258	1	31.729444	I-20 EB (Merge Analysis)	E
6258	2	30.445654	I-20 EB (Merge Analysis)	E
6258	3	30.839663	I-20 EB (Merge Analysis)	E
6258	4	32.243482	I-20 EB (Merge Analysis)	E
6258	5	29.477593	I-20 EB (Merge Analysis)	E
6258	6	30.855319	I-20 EB (Merge Analysis)	E
6258	7	28.705232	I-20 EB (Merge Analysis)	E
6258	8	32.191295	I-20 EB (Merge Analysis)	E
6258	9	29.803759	I-20 EB (Merge Analysis)	E
6258	10	32.540946	I-20 EB (Merge Analysis)	E
6259	1	33.327964	I-20 EB (Basic Analysis)	E
6259	2	35.030309	I-20 EB (Basic Analysis)	E
6259	3	35.726447	I-20 EB (Basic Analysis)	E
6259	4	34.977111	I-20 EB (Basic Analysis)	E
6259	5	34.241455	I-20 EB (Basic Analysis)	E
6259	6	34.490727	I-20 EB (Basic Analysis)	E
6259	7	34.977111	I-20 EB (Basic Analysis)	E
6259	8	35.791805	I-20 EB (Basic Analysis)	E
6259	9	35.227903	I-20 EB (Basic Analysis)	E
6259	10	35.300861	I-20 EB (Basic Analysis)	E
8539	1	19.331192	I-20 WB (Basic Analysis)	SW
8539	2	18.484272	I-20 WB (Basic Analysis)	SW
8539	3	19.459824	I-20 WB (Basic Analysis)	SW
8539	4	18.203103	I-20 WB (Basic Analysis)	SW
8539	5	19.935648	I-20 WB (Basic Analysis)	SW
8539	6	19.235572	I-20 WB (Basic Analysis)	SW
8539	7	19.345991	I-20 WB (Basic Analysis)	SW

ID	Run	Density	Name (Type)	Direction
8539	8	17.838836	I-20 WB (Basic Analysis)	SW
8539	9	18.329458	I-20 WB (Basic Analysis)	SW
8539	10	18.05512	I-20 WB (Basic Analysis)	SW
8542	1	75.797566	I-20 EB (Basic Analysis)	NE
8542	2	74.877485	I-20 EB (Basic Analysis)	NE
8542	3	75.407772	I-20 EB (Basic Analysis)	NE
8542	4	75.679791	I-20 EB (Basic Analysis)	NE
8542	5	72.789816	I-20 EB (Basic Analysis)	NE
8542	6	75.955397	I-20 EB (Basic Analysis)	NE
8542	7	73.056455	I-20 EB (Basic Analysis)	NE
8542	8	79.769039	I-20 EB (Basic Analysis)	NE
8542	9	77.143311	I-20 EB (Basic Analysis)	NE
8542	10	78.553624	I-20 EB (Basic Analysis)	NE
8543	1	72.676244	I-20 EB (Diverge Analysis)	NE
8543	2	71.180245	I-20 EB (Diverge Analysis)	NE
8543	3	71.755178	I-20 EB (Diverge Analysis)	NE
8543	4	70.728512	I-20 EB (Diverge Analysis)	NE
8543	5	69.892512	I-20 EB (Diverge Analysis)	NE
8543	6	70.795979	I-20 EB (Diverge Analysis)	NE
8543	7	69.813313	I-20 EB (Diverge Analysis)	NE
8543	8	74.747177	I-20 EB (Diverge Analysis)	NE
8543	9	72.300778	I-20 EB (Diverge Analysis)	NE
8543	10	72.145312	I-20 EB (Diverge Analysis)	NE
8551	1	38.787455	I-26 WB (Diverge Analysis)	NW
8551	2	36.742922	I-26 WB (Diverge Analysis)	NW
8551	3	38.256522	I-26 WB (Diverge Analysis)	NW
8551	4	74.005044	I-26 WB (Diverge Analysis)	NW
8551	5	39.811188	I-26 WB (Diverge Analysis)	NW
8551	6	39.083721	I-26 WB (Diverge Analysis)	NW
8551	7	38.813855	I-26 WB (Diverge Analysis)	NW
8551	8	39.303722	I-26 WB (Diverge Analysis)	NW
8551	9	37.790122	I-26 WB (Diverge Analysis)	NW
8551	10	38.309322	I-26 WB (Diverge Analysis)	NW
8552	1	83.911979	I-26 EB (Basic Analysis)	SE
8552	2	91.58934	I-26 EB (Basic Analysis)	SE
8552	3	81.859387	I-26 EB (Basic Analysis)	SE
8552	4	83.671955	I-26 EB (Basic Analysis)	SE
8552	5	86.787146	I-26 EB (Basic Analysis)	SE
8552	6	82.051577	I-26 EB (Basic Analysis)	SE
8552	7	79.318204	I-26 EB (Basic Analysis)	SE
8552	8	85.916737	I-26 EB (Basic Analysis)	SE
8552	9	80.120278	I-26 EB (Basic Analysis)	SE
8552	10	89.776772	I-26 EB (Basic Analysis)	SE
8553	1	31.128966	I-26 EB (Basic Analysis)	S
8553	2	49.757178	I-26 EB (Basic Analysis)	S
8553	3	37.581403	I-26 EB (Basic Analysis)	S
8553	4	41.604073	I-26 EB (Basic Analysis)	S
8553	5	31.423636	I-26 EB (Basic Analysis)	S
8553	6	40.01117	I-26 EB (Basic Analysis)	S
8553	7	38.699466	I-26 EB (Basic Analysis)	S
8553	8	27.71921	I-26 EB (Basic Analysis)	S
8553	9	31.389959	I-26 EB (Basic Analysis)	S
8553	10	57.137404	I-26 EB (Basic Analysis)	S
8554	1	23.324409	I-26 WB (Basic Analysis)	N
8554	2	23.999829	I-26 WB (Basic Analysis)	N
8554	3	23.363823	I-26 WB (Basic Analysis)	N
8554	4	23.768717	I-26 WB (Basic Analysis)	N

No Build AM

ID	Run	Density	Name (Type)	Direction
8554	5	22.665112	I-26 WB (Basic Analysis)	N
8554	6	22.720651	I-26 WB (Basic Analysis)	N
8554	7	22.992969	I-26 WB (Basic Analysis)	N
8554	8	22.99476	I-26 WB (Basic Analysis)	N
8554	9	22.303216	I-26 WB (Basic Analysis)	N
8554	10	23.310076	I-26 WB (Basic Analysis)	N
8559	1	17.315461	I-126 NB (Diverge Analysis)	W
8559	2	15.942662	I-126 NB (Diverge Analysis)	W
8559	3	16.502928	I-126 NB (Diverge Analysis)	W
8559	4	15.118395	I-126 NB (Diverge Analysis)	W
8559	5	15.954395	I-126 NB (Diverge Analysis)	W
8559	6	15.364795	I-126 NB (Diverge Analysis)	W
8559	7	17.643995	I-126 NB (Diverge Analysis)	W
8559	8	15.089062	I-126 NB (Diverge Analysis)	W
8559	9	16.127462	I-126 NB (Diverge Analysis)	W
8559	10	15.945595	I-126 NB (Diverge Analysis)	W
8560	1	26.984066	I-126 SB (Basic Analysis)	E
8560	2	26.716933	I-126 SB (Basic Analysis)	E
8560	3	26.861808	I-126 SB (Basic Analysis)	E
8560	4	26.820241	I-126 SB (Basic Analysis)	E
8560	5	26.242574	I-126 SB (Basic Analysis)	E
8560	6	27.148502	I-126 SB (Basic Analysis)	E
8560	7	26.712043	I-126 SB (Basic Analysis)	E
8560	8	26.576948	I-126 SB (Basic Analysis)	E
8560	9	27.391795	I-126 SB (Basic Analysis)	E
8560	10	26.85325	I-126 SB (Basic Analysis)	E
8658	1	57.865408	I-20 WB (Basic Analysis)	SW
8658	2	40.718338	I-20 WB (Basic Analysis)	SW
8658	3	43.750336	I-20 WB (Basic Analysis)	SW
8658	4	42.334765	I-20 WB (Basic Analysis)	SW
8658	5	48.998135	I-20 WB (Basic Analysis)	SW
8658	6	49.33396	I-20 WB (Basic Analysis)	SW
8658	7	45.838136	I-20 WB (Basic Analysis)	SW
8658	8	39.3167	I-20 WB (Basic Analysis)	SW
8658	9	53.29361	I-20 WB (Basic Analysis)	SW
8658	10	45.639602	I-20 WB (Basic Analysis)	SW
8659	1	38.864907	I-20 EB (Basic Analysis)	NE
8659	2	39.359037	I-20 EB (Basic Analysis)	NE
8659	3	40.356203	I-20 EB (Basic Analysis)	NE
8659	4	39.594093	I-20 EB (Basic Analysis)	NE
8659	5	39.382786	I-20 EB (Basic Analysis)	NE
8659	6	40.378332	I-20 EB (Basic Analysis)	NE
8659	7	39.116425	I-20 EB (Basic Analysis)	NE
8659	8	39.671276	I-20 EB (Basic Analysis)	NE
8659	9	38.730243	I-20 EB (Basic Analysis)	NE
8659	10	39.321526	I-20 EB (Basic Analysis)	NE
8763	1	73.313244	I-26 EB (Basic Analysis)	SE
8763	2	67.62363	I-26 EB (Basic Analysis)	SE
8763	3	66.625843	I-26 EB (Basic Analysis)	SE
8763	4	74.422801	I-26 EB (Basic Analysis)	SE
8763	5	69.533154	I-26 EB (Basic Analysis)	SE
8763	6	63.980267	I-26 EB (Basic Analysis)	SE
8763	7	69.208154	I-26 EB (Basic Analysis)	SE
8763	8	64.050259	I-26 EB (Basic Analysis)	SE
8763	9	73.814254	I-26 EB (Basic Analysis)	SE
8763	10	67.686569	I-26 EB (Basic Analysis)	SE
8764	1	14.428174	I-20 WB (Basic Analysis)	S

No Build AM

ID	Run	Density	Name (Type)	Direction
8764	2	13.859158	I-20 WB (Basic Analysis)	S
8764	3	14.150978	I-20 WB (Basic Analysis)	S
8764	4	13.47664	I-20 WB (Basic Analysis)	S
8764	5	14.766198	I-20 WB (Basic Analysis)	S
8764	6	14.851557	I-20 WB (Basic Analysis)	S
8764	7	14.26055	I-20 WB (Basic Analysis)	S
8764	8	13.773373	I-20 WB (Basic Analysis)	S
8764	9	14.163176	I-20 WB (Basic Analysis)	S
8764	10	14.256332	I-20 WB (Basic Analysis)	S
8765	1	66.363772	I-20 EB (Basic Analysis)	NE
8765	2	55.198165	I-20 EB (Basic Analysis)	NE
8765	3	66.658498	I-20 EB (Basic Analysis)	NE
8765	4	62.684211	I-20 EB (Basic Analysis)	NE
8765	5	61.632874	I-20 EB (Basic Analysis)	NE
8765	6	57.478226	I-20 EB (Basic Analysis)	NE
8765	7	55.129925	I-20 EB (Basic Analysis)	NE
8765	8	69.131416	I-20 EB (Basic Analysis)	NE
8765	9	60.147247	I-20 EB (Basic Analysis)	NE
8765	10	63.032819	I-20 EB (Basic Analysis)	NE
8770	1	41.389321	I-20 WB (Diverge Analysis)	SW
8770	2	38.981055	I-20 WB (Diverge Analysis)	SW
8770	3	41.016787	I-20 WB (Diverge Analysis)	SW
8770	4	38.549855	I-20 WB (Diverge Analysis)	SW
8770	5	41.377588	I-20 WB (Diverge Analysis)	SW
8770	6	40.925854	I-20 WB (Diverge Analysis)	SW
8770	7	39.614655	I-20 WB (Diverge Analysis)	SW
8770	8	38.013055	I-20 WB (Diverge Analysis)	SW
8770	9	42.471721	I-20 WB (Diverge Analysis)	SW
8770	10	40.975721	I-20 WB (Diverge Analysis)	SW
8773	1	29.160722	I-26 WB (Basic Analysis)	N
8773	2	27.324917	I-26 WB (Basic Analysis)	N
8773	3	28.988339	I-26 WB (Basic Analysis)	N
8773	4	58.213889	I-26 WB (Basic Analysis)	N
8773	5	52.379387	I-26 WB (Basic Analysis)	N
8773	6	29.392039	I-26 WB (Basic Analysis)	N
8773	7	32.313711	I-26 WB (Basic Analysis)	N
8773	8	55.931657	I-26 WB (Basic Analysis)	N
8773	9	26.028361	I-26 WB (Basic Analysis)	N
8773	10	26.952157	I-26 WB (Basic Analysis)	N
8774	1	38.952577	I-20 EB (Diverge Analysis)	NE
8774	2	39.746008	I-20 EB (Diverge Analysis)	NE
8774	3	39.62284	I-20 EB (Diverge Analysis)	NE
8774	4	40.098325	I-20 EB (Diverge Analysis)	NE
8774	5	38.737749	I-20 EB (Diverge Analysis)	NE
8774	6	40.943315	I-20 EB (Diverge Analysis)	NE
8774	7	37.268327	I-20 EB (Diverge Analysis)	NE
8774	8	40.78291	I-20 EB (Diverge Analysis)	NE
8774	9	40.906078	I-20 EB (Diverge Analysis)	NE
8774	10	40.542303	I-20 EB (Diverge Analysis)	NE
8783	1	14.73989	I-26 WB (Basic Analysis)	NW
8783	2	14.997306	I-26 WB (Basic Analysis)	NW
8783	3	15.159383	I-26 WB (Basic Analysis)	NW
8783	4	13.815857	I-26 WB (Basic Analysis)	NW
8783	5	14.989072	I-26 WB (Basic Analysis)	NW
8783	6	15.169675	I-26 WB (Basic Analysis)	NW
8783	7	14.806736	I-26 WB (Basic Analysis)	NW
8783	8	14.703163	I-26 WB (Basic Analysis)	NW

No Build AM

ID	Run	Density	Name (Type)	Direction
8783	9	15.354503	I-26 WB (Basic Analysis)	NW
8783	10	15.335869	I-26 WB (Basic Analysis)	NW
8784	1	122.018909	I-26 EB (Basic Analysis)	SE
8784	2	120.861234	I-26 EB (Basic Analysis)	SE
8784	3	115.66516	I-26 EB (Basic Analysis)	SE
8784	4	113.075199	I-26 EB (Basic Analysis)	SE
8784	5	112.488285	I-26 EB (Basic Analysis)	SE
8784	6	118.055892	I-26 EB (Basic Analysis)	SE
8784	7	116.908987	I-26 EB (Basic Analysis)	SE
8784	8	115.869772	I-26 EB (Basic Analysis)	SE
8784	9	118.255121	I-26 EB (Basic Analysis)	SE
8784	10	119.445103	I-26 EB (Basic Analysis)	SE
8817	1	16.173466	I-26 WB (Basic Analysis)	NW
8817	2	16.387979	I-26 WB (Basic Analysis)	NW
8817	3	16.257682	I-26 WB (Basic Analysis)	NW
8817	4	14.675849	I-26 WB (Basic Analysis)	NW
8817	5	16.463455	I-26 WB (Basic Analysis)	NW
8817	6	17.067269	I-26 WB (Basic Analysis)	NW
8817	7	15.254239	I-26 WB (Basic Analysis)	NW
8817	8	16.33157	I-26 WB (Basic Analysis)	NW
8817	9	16.353816	I-26 WB (Basic Analysis)	NW
8817	10	16.046347	I-26 WB (Basic Analysis)	NW

No Build PM

ID	Run	Density	Name (Type)	Direction
2466	1	32.365493	I-20 EB (Weaving Analysis)	E
2466	2	31.912195	I-20 EB (Weaving Analysis)	E
2466	3	34.536792	I-20 EB (Weaving Analysis)	E
2466	4	34.133357	I-20 EB (Weaving Analysis)	E
2466	5	33.476074	I-20 EB (Weaving Analysis)	E
2466	6	32.175108	I-20 EB (Weaving Analysis)	E
2466	7	50.62888	I-20 EB (Weaving Analysis)	E
2466	8	37.8776	I-20 EB (Weaving Analysis)	E
2466	9	38.924719	I-20 EB (Weaving Analysis)	E
2466	10	53.928891	I-20 EB (Weaving Analysis)	E
2467	1	26.700597	I-20 WB (Weaving Analysis)	W
2467	2	23.873347	I-20 WB (Weaving Analysis)	W
2467	3	23.644111	I-20 WB (Weaving Analysis)	W
2467	4	22.967317	I-20 WB (Weaving Analysis)	W
2467	5	20.729532	I-20 WB (Weaving Analysis)	W
2467	6	21.651936	I-20 WB (Weaving Analysis)	W
2467	7	22.81995	I-20 WB (Weaving Analysis)	W
2467	8	22.077661	I-20 WB (Weaving Analysis)	W
2467	9	25.26514	I-20 WB (Weaving Analysis)	W
2467	10	22.470638	I-20 WB (Weaving Analysis)	W
2806	1	19.561025	I-20 EB (Basic Analysis)	NE
2806	2	20.16503	I-20 EB (Basic Analysis)	NE
2806	3	18.956959	I-20 EB (Basic Analysis)	NE
2806	4	19.403031	I-20 EB (Basic Analysis)	NE
2806	5	18.846363	I-20 EB (Basic Analysis)	NE
2806	6	19.526886	I-20 EB (Basic Analysis)	NE
2806	7	20.497263	I-20 EB (Basic Analysis)	NE
2806	8	20.370314	I-20 EB (Basic Analysis)	NE
2806	9	20.01817	I-20 EB (Basic Analysis)	NE
2806	10	18.994295	I-20 EB (Basic Analysis)	NE
2807	1	19.561025	I-20 EB (Basic Analysis)	NE
2807	2	20.16503	I-20 EB (Basic Analysis)	NE
2807	3	18.956959	I-20 EB (Basic Analysis)	NE
2807	4	19.403031	I-20 EB (Basic Analysis)	NE
2807	5	18.846363	I-20 EB (Basic Analysis)	NE
2807	6	19.526886	I-20 EB (Basic Analysis)	NE
2807	7	20.497263	I-20 EB (Basic Analysis)	NE
2807	8	20.370314	I-20 EB (Basic Analysis)	NE
2807	9	20.01817	I-20 EB (Basic Analysis)	NE
2807	10	18.994295	I-20 EB (Basic Analysis)	NE
2808	1	17.79826	I-20 EB (Diverge Analysis)	NE
2808	2	19.603978	I-20 EB (Diverge Analysis)	NE
2808	3	17.624296	I-20 EB (Diverge Analysis)	NE
2808	4	18.221707	I-20 EB (Diverge Analysis)	NE
2808	5	18.305318	I-20 EB (Diverge Analysis)	NE
2808	6	18.765176	I-20 EB (Diverge Analysis)	NE
2808	7	20.628882	I-20 EB (Diverge Analysis)	NE
2808	8	18.693702	I-20 EB (Diverge Analysis)	NE
2808	9	18.726068	I-20 EB (Diverge Analysis)	NE
2808	10	17.521806	I-20 EB (Diverge Analysis)	NE
2813	1	18.100465	I-20 WB (Merge Analysis)	S
2813	2	18.063039	I-20 WB (Merge Analysis)	S
2813	3	17.023844	I-20 WB (Merge Analysis)	S
2813	4	16.917803	I-20 WB (Merge Analysis)	S
2813	5	17.500402	I-20 WB (Merge Analysis)	S
2813	6	16.78806	I-20 WB (Merge Analysis)	S
2813	7	17.279588	I-20 WB (Merge Analysis)	S
2813	8	16.544791	I-20 WB (Merge Analysis)	S
2813	9	16.896595	I-20 WB (Merge Analysis)	S
2813	10	17.325747	I-20 WB (Merge Analysis)	S
2814	1	22.674304	I-20 WB (Basic Analysis)	S
2814	2	21.972839	I-20 WB (Basic Analysis)	S
2814	3	22.226837	I-20 WB (Basic Analysis)	S
2814	4	21.800273	I-20 WB (Basic Analysis)	S

No Build PM

ID	Run	Density	Name (Type)	Direction
2814	5	22.564077	I-20 WB (Basic Analysis)	S
2814	6	21.493974	I-20 WB (Basic Analysis)	S
2814	7	21.756585	I-20 WB (Basic Analysis)	S
2814	8	21.705806	I-20 WB (Basic Analysis)	S
2814	9	22.562877	I-20 WB (Basic Analysis)	S
2814	10	21.891511	I-20 WB (Basic Analysis)	S
2815	1	22.674304	I-20 WB (Basic Analysis)	S
2815	2	21.972839	I-20 WB (Basic Analysis)	S
2815	3	22.226837	I-20 WB (Basic Analysis)	S
2815	4	21.800273	I-20 WB (Basic Analysis)	S
2815	5	22.564077	I-20 WB (Basic Analysis)	S
2815	6	21.493974	I-20 WB (Basic Analysis)	S
2815	7	21.756585	I-20 WB (Basic Analysis)	S
2815	8	21.705806	I-20 WB (Basic Analysis)	S
2815	9	22.562877	I-20 WB (Basic Analysis)	S
2815	10	21.891511	I-20 WB (Basic Analysis)	S
2822	1	13.555633	I-20 WB (Merge Analysis)	SW
2822	2	13.650803	I-20 WB (Merge Analysis)	SW
2822	3	12.721064	I-20 WB (Merge Analysis)	SW
2822	4	13.753293	I-20 WB (Merge Analysis)	SW
2822	5	14.119332	I-20 WB (Merge Analysis)	SW
2822	6	13.087103	I-20 WB (Merge Analysis)	SW
2822	7	13.924112	I-20 WB (Merge Analysis)	SW
2822	8	13.040738	I-20 WB (Merge Analysis)	SW
2822	9	14.600063	I-20 WB (Merge Analysis)	SW
2822	10	14.343836	I-20 WB (Merge Analysis)	SW
2823	1	1691.124447	I-20 WB (Basic Analysis)	SW
2823	2	781.416121	I-20 WB (Basic Analysis)	SW
2823	3	1271.25907	I-20 WB (Basic Analysis)	SW
2823	4	1399.551261	I-20 WB (Basic Analysis)	SW
2823	5	1562.832251	I-20 WB (Basic Analysis)	SW
2823	6	2006.023486	I-20 WB (Basic Analysis)	SW
2823	7	1329.573706	I-20 WB (Basic Analysis)	SW
2823	8	1107.978088	I-20 WB (Basic Analysis)	SW
2823	9	2635.821549	I-20 WB (Basic Analysis)	SW
2823	10	3568.855729	I-20 WB (Basic Analysis)	SW
2826	1	18.414667	I-20 EB (Basic Analysis)	NE
2826	2	18.455668	I-20 EB (Basic Analysis)	NE
2826	3	18.105797	I-20 EB (Basic Analysis)	NE
2826	4	18.226065	I-20 EB (Basic Analysis)	NE
2826	5	17.099919	I-20 EB (Basic Analysis)	NE
2826	6	20.500223	I-20 EB (Basic Analysis)	NE
2826	7	20.336221	I-20 EB (Basic Analysis)	NE
2826	8	20.880161	I-20 EB (Basic Analysis)	NE
2826	9	18.950406	I-20 EB (Basic Analysis)	NE
2826	10	17.796927	I-20 EB (Basic Analysis)	NE
2829	1	18.367332	I-20 EB (Merge Analysis)	NE
2829	2	18.193775	I-20 EB (Merge Analysis)	NE
2829	3	19.036768	I-20 EB (Merge Analysis)	NE
2829	4	18.015259	I-20 EB (Merge Analysis)	NE
2829	5	17.422684	I-20 EB (Merge Analysis)	NE
2829	6	18.508657	I-20 EB (Merge Analysis)	NE
2829	7	17.001187	I-20 EB (Merge Analysis)	NE
2829	8	19.066521	I-20 EB (Merge Analysis)	NE
2829	9	19.716121	I-20 EB (Merge Analysis)	NE
2829	10	18.240883	I-20 EB (Merge Analysis)	NE
2830	1	28.330932	I-20 EB (Basic Analysis)	NE
2830	2	27.143329	I-20 EB (Basic Analysis)	NE
2830	3	25.836966	I-20 EB (Basic Analysis)	NE
2830	4	23.184652	I-20 EB (Basic Analysis)	NE
2830	5	23.13187	I-20 EB (Basic Analysis)	NE
2830	6	26.417572	I-20 EB (Basic Analysis)	NE
2830	7	23.884019	I-20 EB (Basic Analysis)	NE
2830	8	22.736002	I-20 EB (Basic Analysis)	NE

No Build PM

ID	Run	Density	Name (Type)	Direction
2830	9	28.739996	I-20 EB (Basic Analysis)	NE
2830	10	25.348729	I-20 EB (Basic Analysis)	NE
2831	1	22.530524	I-20 WB (Basic Analysis)	SW
2831	2	21.161031	I-20 WB (Basic Analysis)	SW
2831	3	22.526042	I-20 WB (Basic Analysis)	SW
2831	4	20.717234	I-20 WB (Basic Analysis)	SW
2831	5	21.696725	I-20 WB (Basic Analysis)	SW
2831	6	20.040332	I-20 WB (Basic Analysis)	SW
2831	7	20.811373	I-20 WB (Basic Analysis)	SW
2831	8	21.559999	I-20 WB (Basic Analysis)	SW
2831	9	21.761725	I-20 WB (Basic Analysis)	SW
2831	10	20.862925	I-20 WB (Basic Analysis)	SW
2837	1	20.682626	I-20 WB (Merge Analysis)	SW
2837	2	19.258223	I-20 WB (Merge Analysis)	SW
2837	3	22.222182	I-20 WB (Merge Analysis)	SW
2837	4	22.107029	I-20 WB (Merge Analysis)	SW
2837	5	20.937967	I-20 WB (Merge Analysis)	SW
2837	6	21.7115	I-20 WB (Merge Analysis)	SW
2837	7	20.765236	I-20 WB (Merge Analysis)	SW
2837	8	21.190805	I-20 WB (Merge Analysis)	SW
2837	9	20.973014	I-20 WB (Merge Analysis)	SW
2837	10	20.081824	I-20 WB (Merge Analysis)	SW
2838	1	86.579623	I-20 WB (Basic Analysis)	SW
2838	2	62.189785	I-20 WB (Basic Analysis)	SW
2838	3	64.530076	I-20 WB (Basic Analysis)	SW
2838	4	44.488806	I-20 WB (Basic Analysis)	SW
2838	5	48.037707	I-20 WB (Basic Analysis)	SW
2838	6	36.181381	I-20 WB (Basic Analysis)	SW
2838	7	43.642576	I-20 WB (Basic Analysis)	SW
2838	8	48.047829	I-20 WB (Basic Analysis)	SW
2838	9	52.393361	I-20 WB (Basic Analysis)	SW
2838	10	46.926271	I-20 WB (Basic Analysis)	SW
2839	1	116.07526	I-20 WB (Diverge Analysis)	SW
2839	2	89.014398	I-20 WB (Diverge Analysis)	SW
2839	3	92.640332	I-20 WB (Diverge Analysis)	SW
2839	4	80.173979	I-20 WB (Diverge Analysis)	SW
2839	5	94.536508	I-20 WB (Diverge Analysis)	SW
2839	6	65.42818	I-20 WB (Diverge Analysis)	SW
2839	7	91.783018	I-20 WB (Diverge Analysis)	SW
2839	8	100.497362	I-20 WB (Diverge Analysis)	SW
2839	9	91.15264	I-20 WB (Diverge Analysis)	SW
2839	10	88.462188	I-20 WB (Diverge Analysis)	SW
2840	1	116.07526	I-20 WB (Diverge Analysis)	SW
2840	2	89.014398	I-20 WB (Diverge Analysis)	SW
2840	3	92.640332	I-20 WB (Diverge Analysis)	SW
2840	4	80.173979	I-20 WB (Diverge Analysis)	SW
2840	5	94.536508	I-20 WB (Diverge Analysis)	SW
2840	6	65.42818	I-20 WB (Diverge Analysis)	SW
2840	7	91.783018	I-20 WB (Diverge Analysis)	SW
2840	8	100.497362	I-20 WB (Diverge Analysis)	SW
2840	9	91.15264	I-20 WB (Diverge Analysis)	SW
2840	10	88.462188	I-20 WB (Diverge Analysis)	SW
2843	1	19.945524	I-20 EB (Merge Analysis)	NE
2843	2	22.27259	I-20 EB (Merge Analysis)	NE
2843	3	19.589828	I-20 EB (Merge Analysis)	NE
2843	4	21.943439	I-20 EB (Merge Analysis)	NE
2843	5	21.617826	I-20 EB (Merge Analysis)	NE
2843	6	21.343533	I-20 EB (Merge Analysis)	NE
2843	7	21.256821	I-20 EB (Merge Analysis)	NE
2843	8	21.605439	I-20 EB (Merge Analysis)	NE
2843	9	21.117021	I-20 EB (Merge Analysis)	NE
2843	10	19.135032	I-20 EB (Merge Analysis)	NE
2844	1	19.945524	I-20 EB (Merge Analysis)	NE
2844	2	22.27259	I-20 EB (Merge Analysis)	NE

No Build PM

ID	Run	Density	Name (Type)	Direction
2844	3	19.589828	I-20 EB (Merge Analysis)	NE
2844	4	21.943439	I-20 EB (Merge Analysis)	NE
2844	5	21.617826	I-20 EB (Merge Analysis)	NE
2844	6	21.343533	I-20 EB (Merge Analysis)	NE
2844	7	21.256821	I-20 EB (Merge Analysis)	NE
2844	8	21.605439	I-20 EB (Merge Analysis)	NE
2844	9	21.117021	I-20 EB (Merge Analysis)	NE
2844	10	19.135032	I-20 EB (Merge Analysis)	NE
2848	1	22.516146	I-20 EB (Basic Analysis)	NE
2848	2	20.701516	I-20 EB (Basic Analysis)	NE
2848	3	21.62832	I-20 EB (Basic Analysis)	NE
2848	4	22.68505	I-20 EB (Basic Analysis)	NE
2848	5	21.530875	I-20 EB (Basic Analysis)	NE
2848	6	21.55253	I-20 EB (Basic Analysis)	NE
2848	7	21.180076	I-20 EB (Basic Analysis)	NE
2848	8	22.838796	I-20 EB (Basic Analysis)	NE
2848	9	22.70887	I-20 EB (Basic Analysis)	NE
2848	10	20.469814	I-20 EB (Basic Analysis)	NE
2852	1	21.669861	I-20 WB (Basic Analysis)	SW
2852	2	22.520838	I-20 WB (Basic Analysis)	SW
2852	3	23.311729	I-20 WB (Basic Analysis)	SW
2852	4	20.095066	I-20 WB (Basic Analysis)	SW
2852	5	22.302854	I-20 WB (Basic Analysis)	SW
2852	6	21.808198	I-20 WB (Basic Analysis)	SW
2852	7	19.404782	I-20 WB (Basic Analysis)	SW
2852	8	20.881765	I-20 WB (Basic Analysis)	SW
2852	9	23.332689	I-20 WB (Basic Analysis)	SW
2852	10	19.579449	I-20 WB (Basic Analysis)	SW
2856	1	21.476578	I-20 EB (Basic Analysis)	NE
2856	2	19.517859	I-20 EB (Basic Analysis)	NE
2856	3	18.707022	I-20 EB (Basic Analysis)	NE
2856	4	20.952712	I-20 EB (Basic Analysis)	NE
2856	5	17.480174	I-20 EB (Basic Analysis)	NE
2856	6	19.612232	I-20 EB (Basic Analysis)	NE
2856	7	22.401047	I-20 EB (Basic Analysis)	NE
2856	8	19.213554	I-20 EB (Basic Analysis)	NE
2856	9	20.476996	I-20 EB (Basic Analysis)	NE
2856	10	19.487043	I-20 EB (Basic Analysis)	NE
2859	1	58.015845	I-20 WB (Weaving Analysis)	SW
2859	2	73.101742	I-20 WB (Weaving Analysis)	SW
2859	3	81.76095	I-20 WB (Weaving Analysis)	SW
2859	4	46.675499	I-20 WB (Weaving Analysis)	SW
2859	5	55.400307	I-20 WB (Weaving Analysis)	SW
2859	6	69.83232	I-20 WB (Weaving Analysis)	SW
2859	7	29.492516	I-20 WB (Weaving Analysis)	SW
2859	8	61.219667	I-20 WB (Weaving Analysis)	SW
2859	9	63.024727	I-20 WB (Weaving Analysis)	SW
2859	10	24.405338	I-20 WB (Weaving Analysis)	SW
2863	1	55.202557	I-20 EB (Merge Analysis)	E
2863	2	16.990198	I-20 EB (Merge Analysis)	E
2863	3	26.449115	I-20 EB (Merge Analysis)	E
2863	4	51.292733	I-20 EB (Merge Analysis)	E
2863	5	25.95032	I-20 EB (Merge Analysis)	E
2863	6	15.849725	I-20 EB (Merge Analysis)	E
2863	7	47.330951	I-20 EB (Merge Analysis)	E
2863	8	15.95364	I-20 EB (Merge Analysis)	E
2863	9	16.057556	I-20 EB (Merge Analysis)	E
2863	10	21.549495	I-20 EB (Merge Analysis)	E
4563	1	9.591997	I-126 SB (Merge Analysis)	E
4563	2	9.662397	I-126 SB (Merge Analysis)	E
4563	3	11.008797	I-126 SB (Merge Analysis)	E
4563	4	10.997063	I-126 SB (Merge Analysis)	E
4563	5	10.777063	I-126 SB (Merge Analysis)	E
4563	6	11.219997	I-126 SB (Merge Analysis)	E

No Build PM

ID	Run	Density	Name (Type)	Direction
4563	7	9.650664	I-126 SB (Merge Analysis)	E
4563	8	10.565863	I-126 SB (Merge Analysis)	E
4563	9	10.750664	I-126 SB (Merge Analysis)	E
4563	10	9.899997	I-126 SB (Merge Analysis)	E
4566	1	78.400773	I-126 NB (Basic Analysis)	W
4566	2	89.642545	I-126 NB (Basic Analysis)	W
4566	3	84.44051	I-126 NB (Basic Analysis)	W
4566	4	90.279908	I-126 NB (Basic Analysis)	W
4566	5	82.783702	I-126 NB (Basic Analysis)	W
4566	6	96.148892	I-126 NB (Basic Analysis)	W
4566	7	90.865708	I-126 NB (Basic Analysis)	W
4566	8	84.108302	I-126 NB (Basic Analysis)	W
4566	9	84.794694	I-126 NB (Basic Analysis)	W
4566	10	91.970528	I-126 NB (Basic Analysis)	W
4570	1	107.755361	I-126 NB (Basic Analysis)	NW
4570	2	116.622365	I-126 NB (Basic Analysis)	NW
4570	3	114.388038	I-126 NB (Basic Analysis)	NW
4570	4	118.18699	I-126 NB (Basic Analysis)	NW
4570	5	109.66318	I-126 NB (Basic Analysis)	NW
4570	6	120.300962	I-126 NB (Basic Analysis)	NW
4570	7	116.996541	I-126 NB (Basic Analysis)	NW
4570	8	111.431576	I-126 NB (Basic Analysis)	NW
4570	9	115.138772	I-126 NB (Basic Analysis)	NW
4570	10	115.918105	I-126 NB (Basic Analysis)	NW
4573	1	11.99472	I-126 SB (Basic Analysis)	E
4573	2	13.283798	I-126 SB (Basic Analysis)	E
4573	3	12.403452	I-126 SB (Basic Analysis)	E
4573	4	13.556287	I-126 SB (Basic Analysis)	E
4573	5	12.00258	I-126 SB (Basic Analysis)	E
4573	6	13.464584	I-126 SB (Basic Analysis)	E
4573	7	13.089913	I-126 SB (Basic Analysis)	E
4573	8	11.963279	I-126 SB (Basic Analysis)	E
4573	9	13.797334	I-126 SB (Basic Analysis)	E
4573	10	14.01742	I-126 SB (Basic Analysis)	E
4578	1	13.95732	I-126 SB (Basic Analysis)	E
4578	2	14.800708	I-126 SB (Basic Analysis)	E
4578	3	14.440705	I-126 SB (Basic Analysis)	E
4578	4	13.822107	I-126 SB (Basic Analysis)	E
4578	5	14.140702	I-126 SB (Basic Analysis)	E
4578	6	14.452536	I-126 SB (Basic Analysis)	E
4578	7	14.38662	I-126 SB (Basic Analysis)	E
4578	8	19.902448	I-126 SB (Basic Analysis)	E
4578	9	14.455916	I-126 SB (Basic Analysis)	E
4578	10	15.1886	I-126 SB (Basic Analysis)	E
4579	1	10.9803	I-126 SB (Diverge Analysis)	E
4579	2	11.63143	I-126 SB (Diverge Analysis)	E
4579	3	9.568211	I-126 SB (Diverge Analysis)	E
4579	4	10.331786	I-126 SB (Diverge Analysis)	E
4579	5	11.435307	I-126 SB (Diverge Analysis)	E
4579	6	11.963533	I-126 SB (Diverge Analysis)	E
4579	7	12.520524	I-126 SB (Diverge Analysis)	E
4579	8	68.930869	I-126 SB (Diverge Analysis)	E
4579	9	10.3867	I-126 SB (Diverge Analysis)	E
4579	10	12.38193	I-126 SB (Diverge Analysis)	E
4586	1	75.028022	I-126 NB (Merge Analysis)	NW
4586	2	77.820577	I-126 NB (Merge Analysis)	NW
4586	3	77.02712	I-126 NB (Merge Analysis)	NW
4586	4	79.927139	I-126 NB (Merge Analysis)	NW
4586	5	70.471903	I-126 NB (Merge Analysis)	NW
4586	6	76.392649	I-126 NB (Merge Analysis)	NW
4586	7	75.398988	I-126 NB (Merge Analysis)	NW
4586	8	71.530335	I-126 NB (Merge Analysis)	NW
4586	9	75.064824	I-126 NB (Merge Analysis)	NW
4586	10	75.572695	I-126 NB (Merge Analysis)	NW

No Build PM

ID	Run	Density	Name (Type)	Direction
4587	1	106.023845	I-126 NB (Basic Analysis)	NW
4587	2	112.922269	I-126 NB (Basic Analysis)	NW
4587	3	115.344753	I-126 NB (Basic Analysis)	NW
4587	4	118.743374	I-126 NB (Basic Analysis)	NW
4587	5	107.662642	I-126 NB (Basic Analysis)	NW
4587	6	117.509314	I-126 NB (Basic Analysis)	NW
4587	7	116.156216	I-126 NB (Basic Analysis)	NW
4587	8	108.781628	I-126 NB (Basic Analysis)	NW
4587	9	114.03927	I-126 NB (Basic Analysis)	NW
4587	10	114.481706	I-126 NB (Basic Analysis)	NW
4588	1	75.658654	I-126 NB (Diverge Analysis)	NW
4588	2	77.728611	I-126 NB (Diverge Analysis)	NW
4588	3	77.885405	I-126 NB (Diverge Analysis)	NW
4588	4	81.805257	I-126 NB (Diverge Analysis)	NW
4588	5	71.30693	I-126 NB (Diverge Analysis)	NW
4588	6	75.686162	I-126 NB (Diverge Analysis)	NW
4588	7	76.505893	I-126 NB (Diverge Analysis)	NW
4588	8	72.280704	I-126 NB (Diverge Analysis)	NW
4588	9	76.241818	I-126 NB (Diverge Analysis)	NW
4588	10	75.840205	I-126 NB (Diverge Analysis)	NW
4589	1	75.658654	I-126 NB (Diverge Analysis)	NW
4589	2	77.728611	I-126 NB (Diverge Analysis)	NW
4589	3	77.885405	I-126 NB (Diverge Analysis)	NW
4589	4	81.805257	I-126 NB (Diverge Analysis)	NW
4589	5	71.30693	I-126 NB (Diverge Analysis)	NW
4589	6	75.686162	I-126 NB (Diverge Analysis)	NW
4589	7	76.505893	I-126 NB (Diverge Analysis)	NW
4589	8	72.280704	I-126 NB (Diverge Analysis)	NW
4589	9	76.241818	I-126 NB (Diverge Analysis)	NW
4589	10	75.840205	I-126 NB (Diverge Analysis)	NW
4593	1	11.433153	I-126 SB (Merge Analysis)	SE
4593	2	13.340841	I-126 SB (Merge Analysis)	SE
4593	3	12.416845	I-126 SB (Merge Analysis)	SE
4593	4	11.770567	I-126 SB (Merge Analysis)	SE
4593	5	11.627815	I-126 SB (Merge Analysis)	SE
4593	6	11.324142	I-126 SB (Merge Analysis)	SE
4593	7	12.100195	I-126 SB (Merge Analysis)	SE
4593	8	12.499901	I-126 SB (Merge Analysis)	SE
4593	9	11.440939	I-126 SB (Merge Analysis)	SE
4593	10	12.751664	I-126 SB (Merge Analysis)	SE
4594	1	17.314172	I-126 SB (Basic Analysis)	SE
4594	2	16.892182	I-126 SB (Basic Analysis)	SE
4594	3	16.808098	I-126 SB (Basic Analysis)	SE
4594	4	17.240304	I-126 SB (Basic Analysis)	SE
4594	5	17.081566	I-126 SB (Basic Analysis)	SE
4594	6	18.367969	I-126 SB (Basic Analysis)	SE
4594	7	17.217515	I-126 SB (Basic Analysis)	SE
4594	8	17.56328	I-126 SB (Basic Analysis)	SE
4594	9	17.496484	I-126 SB (Basic Analysis)	SE
4594	10	17.297669	I-126 SB (Basic Analysis)	SE
4599	1	103.609125	I-126 NB (Basic Analysis)	NW
4599	2	109.517718	I-126 NB (Basic Analysis)	NW
4599	3	107.142873	I-126 NB (Basic Analysis)	NW
4599	4	112.023737	I-126 NB (Basic Analysis)	NW
4599	5	106.322742	I-126 NB (Basic Analysis)	NW
4599	6	109.721895	I-126 NB (Basic Analysis)	NW
4599	7	111.396377	I-126 NB (Basic Analysis)	NW
4599	8	106.153926	I-126 NB (Basic Analysis)	NW
4599	9	108.639413	I-126 NB (Basic Analysis)	NW
4599	10	109.971698	I-126 NB (Basic Analysis)	NW
4601	1	104.884899	I-126 NB (Basic Analysis)	NW
4601	2	107.968799	I-126 NB (Basic Analysis)	NW
4601	3	106.947679	I-126 NB (Basic Analysis)	NW
4601	4	109.716147	I-126 NB (Basic Analysis)	NW

No Build PM

ID	Run	Density	Name (Type)	Direction
4601	5	110.200298	I-126 NB (Basic Analysis)	NW
4601	6	113.379563	I-126 NB (Basic Analysis)	NW
4601	7	112.742829	I-126 NB (Basic Analysis)	NW
4601	8	108.124315	I-126 NB (Basic Analysis)	NW
4601	9	110.452644	I-126 NB (Basic Analysis)	NW
4601	10	111.294776	I-126 NB (Basic Analysis)	NW
4602	1	9.807754	WB EXPRESSWAY TO I-26 WB (Basic Anal	NW
4602	2	10.502791	WB EXPRESSWAY TO I-26 WB (Basic Anal	NW
4602	3	11.789898	WB EXPRESSWAY TO I-26 WB (Basic Anal	NW
4602	4	14.22253	WB EXPRESSWAY TO I-26 WB (Basic Anal	NW
4602	5	12.510678	WB EXPRESSWAY TO I-26 WB (Basic Anal	NW
4602	6	9.936464	WB EXPRESSWAY TO I-26 WB (Basic Anal	NW
4602	7	12.562162	WB EXPRESSWAY TO I-26 WB (Basic Anal	NW
4602	8	11.944351	WB EXPRESSWAY TO I-26 WB (Basic Anal	NW
4602	9	11.738414	WB EXPRESSWAY TO I-26 WB (Basic Anal	NW
4602	10	49.965485	WB EXPRESSWAY TO I-26 WB (Basic Anal	NW
4603	1	111.805487	I-126 NB (Basic Analysis)	NW
4603	2	113.393699	I-126 NB (Basic Analysis)	NW
4603	3	110.544137	I-126 NB (Basic Analysis)	NW
4603	4	117.613564	I-126 NB (Basic Analysis)	NW
4603	5	116.691647	I-126 NB (Basic Analysis)	NW
4603	6	119.35892	I-126 NB (Basic Analysis)	NW
4603	7	119.021583	I-126 NB (Basic Analysis)	NW
4603	8	117.372609	I-126 NB (Basic Analysis)	NW
4603	9	115.606299	I-126 NB (Basic Analysis)	NW
4603	10	118.001188	I-126 NB (Basic Analysis)	NW
4609	1	20.474092	I-126 SB (Basic Analysis)	SE
4609	2	20.266425	I-126 SB (Basic Analysis)	SE
4609	3	19.704779	I-126 SB (Basic Analysis)	SE
4609	4	19.874689	I-126 SB (Basic Analysis)	SE
4609	5	18.874111	I-126 SB (Basic Analysis)	SE
4609	6	21.163169	I-126 SB (Basic Analysis)	SE
4609	7	19.723658	I-126 SB (Basic Analysis)	SE
4609	8	20.049318	I-126 SB (Basic Analysis)	SE
4609	9	20.360819	I-126 SB (Basic Analysis)	SE
4609	10	20.311262	I-126 SB (Basic Analysis)	SE
4611	1	110.061567	I-26 EB (Diverge Analysis)	SE
4611	2	116.450365	I-26 EB (Diverge Analysis)	SE
4611	3	98.507171	I-26 EB (Diverge Analysis)	SE
4611	4	101.047437	I-26 EB (Diverge Analysis)	SE
4611	5	92.238639	I-26 EB (Diverge Analysis)	SE
4611	6	105.925568	I-26 EB (Diverge Analysis)	SE
4611	7	96.600504	I-26 EB (Diverge Analysis)	SE
4611	8	103.992503	I-26 EB (Diverge Analysis)	SE
4611	9	95.911172	I-26 EB (Diverge Analysis)	SE
4611	10	115.957566	I-26 EB (Diverge Analysis)	SE
4619	1	149.84303	I-26 WB (Basic Analysis)	NW
4619	2	155.032208	I-26 WB (Basic Analysis)	NW
4619	3	152.770258	I-26 WB (Basic Analysis)	NW
4619	4	156.739758	I-26 WB (Basic Analysis)	NW
4619	5	156.93934	I-26 WB (Basic Analysis)	NW
4619	6	164.013475	I-26 WB (Basic Analysis)	NW
4619	7	162.904677	I-26 WB (Basic Analysis)	NW
4619	8	161.485414	I-26 WB (Basic Analysis)	NW
4619	9	156.22971	I-26 WB (Basic Analysis)	NW
4619	10	161.973286	I-26 WB (Basic Analysis)	NW
4624	1	109.115951	I-26 EB (Weaving Analysis)	SE
4624	2	95.270379	I-26 EB (Weaving Analysis)	SE
4624	3	100.43803	I-26 EB (Weaving Analysis)	SE
4624	4	110.875463	I-26 EB (Weaving Analysis)	SE
4624	5	108.266834	I-26 EB (Weaving Analysis)	SE
4624	6	98.179553	I-26 EB (Weaving Analysis)	SE
4624	7	106.571517	I-26 EB (Weaving Analysis)	SE
4624	8	101.380522	I-26 EB (Weaving Analysis)	SE

No Build PM

ID	Run	Density	Name (Type)	Direction
4624	9	106.13091	I-26 EB (Weaving Analysis)	SE
4624	10	102.378454	I-26 EB (Weaving Analysis)	SE
4639	1	99.45349	I-26 EB (Basic Analysis)	SE
4639	2	90.625273	I-26 EB (Basic Analysis)	SE
4639	3	88.920753	I-26 EB (Basic Analysis)	SE
4639	4	108.751321	I-26 EB (Basic Analysis)	SE
4639	5	90.96071	I-26 EB (Basic Analysis)	SE
4639	6	78.102273	I-26 EB (Basic Analysis)	SE
4639	7	88.95057	I-26 EB (Basic Analysis)	SE
4639	8	85.645889	I-26 EB (Basic Analysis)	SE
4639	9	95.30152	I-26 EB (Basic Analysis)	SE
4639	10	89.884826	I-26 EB (Basic Analysis)	SE
4641	1	83.096237	I-26 EB (Basic Analysis)	SE
4641	2	87.788992	I-26 EB (Basic Analysis)	SE
4641	3	71.152305	I-26 EB (Basic Analysis)	SE
4641	4	96.593852	I-26 EB (Basic Analysis)	SE
4641	5	71.449565	I-26 EB (Basic Analysis)	SE
4641	6	72.430526	I-26 EB (Basic Analysis)	SE
4641	7	65.763961	I-26 EB (Basic Analysis)	SE
4641	8	73.070627	I-26 EB (Basic Analysis)	SE
4641	9	77.577098	I-26 EB (Basic Analysis)	SE
4641	10	87.953476	I-26 EB (Basic Analysis)	SE
4643	1	108.664826	I-26 WB (Weaving Analysis)	NW
4643	2	113.106081	I-26 WB (Weaving Analysis)	NW
4643	3	106.152385	I-26 WB (Weaving Analysis)	NW
4643	4	116.639867	I-26 WB (Weaving Analysis)	NW
4643	5	112.775122	I-26 WB (Weaving Analysis)	NW
4643	6	116.668337	I-26 WB (Weaving Analysis)	NW
4643	7	111.17015	I-26 WB (Weaving Analysis)	NW
4643	8	114.390771	I-26 WB (Weaving Analysis)	NW
4643	9	112.604305	I-26 WB (Weaving Analysis)	NW
4643	10	104.988692	I-26 WB (Weaving Analysis)	NW
4646	1	134.876297	I-26 WB (Basic Analysis)	NW
4646	2	137.928173	I-26 WB (Basic Analysis)	NW
4646	3	132.334941	I-26 WB (Basic Analysis)	NW
4646	4	137.273718	I-26 WB (Basic Analysis)	NW
4646	5	135.850109	I-26 WB (Basic Analysis)	NW
4646	6	138.310502	I-26 WB (Basic Analysis)	NW
4646	7	136.387617	I-26 WB (Basic Analysis)	NW
4646	8	136.655247	I-26 WB (Basic Analysis)	NW
4646	9	138.076606	I-26 WB (Basic Analysis)	NW
4646	10	129.845311	I-26 WB (Basic Analysis)	NW
4649	1	81.73017	I-26 EB (Basic Analysis)	SE
4649	2	76.827073	I-26 EB (Basic Analysis)	SE
4649	3	65.538546	I-26 EB (Basic Analysis)	SE
4649	4	90.058784	I-26 EB (Basic Analysis)	SE
4649	5	66.970991	I-26 EB (Basic Analysis)	SE
4649	6	60.811238	I-26 EB (Basic Analysis)	SE
4649	7	59.946544	I-26 EB (Basic Analysis)	SE
4649	8	67.574376	I-26 EB (Basic Analysis)	SE
4649	9	67.066012	I-26 EB (Basic Analysis)	SE
4649	10	87.20102	I-26 EB (Basic Analysis)	SE
4650	1	80.216484	I-26 EB (Weaving Analysis)	SE
4650	2	78.53194	I-26 EB (Weaving Analysis)	SE
4650	3	62.632178	I-26 EB (Weaving Analysis)	SE
4650	4	95.683896	I-26 EB (Weaving Analysis)	SE
4650	5	64.442565	I-26 EB (Weaving Analysis)	SE
4650	6	60.766968	I-26 EB (Weaving Analysis)	SE
4650	7	57.59474	I-26 EB (Weaving Analysis)	SE
4650	8	68.389783	I-26 EB (Weaving Analysis)	SE
4650	9	68.110687	I-26 EB (Weaving Analysis)	SE
4650	10	86.923515	I-26 EB (Weaving Analysis)	SE
4651	1	112.882288	I-26 WB (Weaving Analysis)	NW
4651	2	116.260733	I-26 WB (Weaving Analysis)	NW

No Build PM

ID	Run	Density	Name (Type)	Direction
4651	3	113.272557	I-26 WB (Weaving Analysis)	NW
4651	4	112.282323	I-26 WB (Weaving Analysis)	NW
4651	5	112.838601	I-26 WB (Weaving Analysis)	NW
4651	6	114.816157	I-26 WB (Weaving Analysis)	NW
4651	7	112.751228	I-26 WB (Weaving Analysis)	NW
4651	8	113.399248	I-26 WB (Weaving Analysis)	NW
4651	9	116.518486	I-26 WB (Weaving Analysis)	NW
4651	10	107.715598	I-26 WB (Weaving Analysis)	NW
4654	1	92.468571	I-26 WB (Basic Analysis)	NW
4654	2	95.568286	I-26 WB (Basic Analysis)	NW
4654	3	92.540046	I-26 WB (Basic Analysis)	NW
4654	4	89.767606	I-26 WB (Basic Analysis)	NW
4654	5	93.108075	I-26 WB (Basic Analysis)	NW
4654	6	91.987061	I-26 WB (Basic Analysis)	NW
4654	7	92.145057	I-26 WB (Basic Analysis)	NW
4654	8	94.449154	I-26 WB (Basic Analysis)	NW
4654	9	94.723765	I-26 WB (Basic Analysis)	NW
4654	10	87.911162	I-26 WB (Basic Analysis)	NW
4659	1	72.046962	I-26 WB (Basic Analysis)	NW
4659	2	72.139103	I-26 WB (Basic Analysis)	NW
4659	3	71.362493	I-26 WB (Basic Analysis)	NW
4659	4	71.296679	I-26 WB (Basic Analysis)	NW
4659	5	69.453877	I-26 WB (Basic Analysis)	NW
4659	6	68.190242	I-26 WB (Basic Analysis)	NW
4659	7	71.974567	I-26 WB (Basic Analysis)	NW
4659	8	72.35629	I-26 WB (Basic Analysis)	NW
4659	9	74.738769	I-26 WB (Basic Analysis)	NW
4659	10	71.132143	I-26 WB (Basic Analysis)	NW
4665	1	81.044113	I-26 EB (Basic Analysis)	SE
4665	2	74.902573	I-26 EB (Basic Analysis)	SE
4665	3	67.577122	I-26 EB (Basic Analysis)	SE
4665	4	88.0265	I-26 EB (Basic Analysis)	SE
4665	5	68.276705	I-26 EB (Basic Analysis)	SE
4665	6	63.507426	I-26 EB (Basic Analysis)	SE
4665	7	60.594735	I-26 EB (Basic Analysis)	SE
4665	8	67.361864	I-26 EB (Basic Analysis)	SE
4665	9	69.527885	I-26 EB (Basic Analysis)	SE
4665	10	84.010618	I-26 EB (Basic Analysis)	SE
4667	1	65.756068	I-26 EB (Merge Analysis)	SE
4667	2	60.466993	I-26 EB (Merge Analysis)	SE
4667	3	53.95619	I-26 EB (Merge Analysis)	SE
4667	4	64.797364	I-26 EB (Merge Analysis)	SE
4667	5	54.266863	I-26 EB (Merge Analysis)	SE
4667	6	58.825951	I-26 EB (Merge Analysis)	SE
4667	7	50.963812	I-26 EB (Merge Analysis)	SE
4667	8	51.951107	I-26 EB (Merge Analysis)	SE
4667	9	54.876775	I-26 EB (Merge Analysis)	SE
4667	10	65.277669	I-26 EB (Merge Analysis)	SE
4668	1	65.756068	I-26 EB (Merge Analysis)	SE
4668	2	60.466993	I-26 EB (Merge Analysis)	SE
4668	3	53.95619	I-26 EB (Merge Analysis)	SE
4668	4	64.797364	I-26 EB (Merge Analysis)	SE
4668	5	54.266863	I-26 EB (Merge Analysis)	SE
4668	6	58.825951	I-26 EB (Merge Analysis)	SE
4668	7	50.963812	I-26 EB (Merge Analysis)	SE
4668	8	51.951107	I-26 EB (Merge Analysis)	SE
4668	9	54.876775	I-26 EB (Merge Analysis)	SE
4668	10	65.277669	I-26 EB (Merge Analysis)	SE
4669	1	59.940944	I-26 EB (Basic Analysis)	SE
4669	2	52.739474	I-26 EB (Basic Analysis)	SE
4669	3	44.346886	I-26 EB (Basic Analysis)	SE
4669	4	58.434933	I-26 EB (Basic Analysis)	SE
4669	5	44.654934	I-26 EB (Basic Analysis)	SE
4669	6	43.393649	I-26 EB (Basic Analysis)	SE

No Build PM

ID	Run	Density	Name (Type)	Direction
4669	7	43.823205	I-26 EB (Basic Analysis)	SE
4669	8	44.006322	I-26 EB (Basic Analysis)	SE
4669	9	42.974362	I-26 EB (Basic Analysis)	SE
4669	10	55.830219	I-26 EB (Basic Analysis)	SE
4670	1	59.784718	I-26 EB (Diverge Analysis)	SE
4670	2	56.660398	I-26 EB (Diverge Analysis)	SE
4670	3	43.801832	I-26 EB (Diverge Analysis)	SE
4670	4	61.550243	I-26 EB (Diverge Analysis)	SE
4670	5	47.830501	I-26 EB (Diverge Analysis)	SE
4670	6	41.718195	I-26 EB (Diverge Analysis)	SE
4670	7	43.808649	I-26 EB (Diverge Analysis)	SE
4670	8	45.015205	I-26 EB (Diverge Analysis)	SE
4670	9	46.594406	I-26 EB (Diverge Analysis)	SE
4670	10	58.816747	I-26 EB (Diverge Analysis)	SE
4675	1	39.382924	I-26 WB (Merge Analysis)	NW
4675	2	38.180258	I-26 WB (Merge Analysis)	NW
4675	3	36.08977	I-26 WB (Merge Analysis)	NW
4675	4	38.358213	I-26 WB (Merge Analysis)	NW
4675	5	36.185592	I-26 WB (Merge Analysis)	NW
4675	6	36.834836	I-26 WB (Merge Analysis)	NW
4675	7	37.315903	I-26 WB (Merge Analysis)	NW
4675	8	38.383635	I-26 WB (Merge Analysis)	NW
4675	9	38.512702	I-26 WB (Merge Analysis)	NW
4675	10	39.22648	I-26 WB (Merge Analysis)	NW
4676	1	49.787343	I-26 WB (Basic Analysis)	NW
4676	2	49.775725	I-26 WB (Basic Analysis)	NW
4676	3	49.552474	I-26 WB (Basic Analysis)	NW
4676	4	50.663747	I-26 WB (Basic Analysis)	NW
4676	5	49.471971	I-26 WB (Basic Analysis)	NW
4676	6	49.960799	I-26 WB (Basic Analysis)	NW
4676	7	50.114335	I-26 WB (Basic Analysis)	NW
4676	8	50.752549	I-26 WB (Basic Analysis)	NW
4676	9	51.855523	I-26 WB (Basic Analysis)	NW
4676	10	54.804255	I-26 WB (Basic Analysis)	NW
4677	1	49.787343	I-26 WB (Basic Analysis)	NW
4677	2	49.775725	I-26 WB (Basic Analysis)	NW
4677	3	49.552474	I-26 WB (Basic Analysis)	NW
4677	4	50.663747	I-26 WB (Basic Analysis)	NW
4677	5	49.471971	I-26 WB (Basic Analysis)	NW
4677	6	49.960799	I-26 WB (Basic Analysis)	NW
4677	7	50.114335	I-26 WB (Basic Analysis)	NW
4677	8	50.752549	I-26 WB (Basic Analysis)	NW
4677	9	51.855523	I-26 WB (Basic Analysis)	NW
4677	10	54.804255	I-26 WB (Basic Analysis)	NW
4687	1	68.020123	I-26 EB (Basic Analysis)	SE
4687	2	75.921409	I-26 EB (Basic Analysis)	SE
4687	3	48.392483	I-26 EB (Basic Analysis)	SE
4687	4	68.234922	I-26 EB (Basic Analysis)	SE
4687	5	67.422818	I-26 EB (Basic Analysis)	SE
4687	6	72.972884	I-26 EB (Basic Analysis)	SE
4687	7	58.975447	I-26 EB (Basic Analysis)	SE
4687	8	55.218123	I-26 EB (Basic Analysis)	SE
4687	9	67.120447	I-26 EB (Basic Analysis)	SE
4687	10	79.50772	I-26 EB (Basic Analysis)	SE
4689	1	62.14057	I-26 WB (Basic Analysis)	NW
4689	2	40.32267	I-26 WB (Basic Analysis)	NW
4689	3	60.638212	I-26 WB (Basic Analysis)	NW
4689	4	65.127742	I-26 WB (Basic Analysis)	NW
4689	5	41.379954	I-26 WB (Basic Analysis)	NW
4689	6	41.456595	I-26 WB (Basic Analysis)	NW
4689	7	44.75218	I-26 WB (Basic Analysis)	NW
4689	8	65.120355	I-26 WB (Basic Analysis)	NW
4689	9	67.370661	I-26 WB (Basic Analysis)	NW
4689	10	76.958237	I-26 WB (Basic Analysis)	NW

No Build PM

ID	Run	Density	Name (Type)	Direction
4700	1	46.692004	I-26 WB (Merge Analysis)	NW
4700	2	38.711733	I-26 WB (Merge Analysis)	NW
4700	3	45.070314	I-26 WB (Merge Analysis)	NW
4700	4	46.605591	I-26 WB (Merge Analysis)	NW
4700	5	39.773177	I-26 WB (Merge Analysis)	NW
4700	6	40.457282	I-26 WB (Merge Analysis)	NW
4700	7	40.1822	I-26 WB (Merge Analysis)	NW
4700	8	45.849474	I-26 WB (Merge Analysis)	NW
4700	9	46.231133	I-26 WB (Merge Analysis)	NW
4700	10	47.152875	I-26 WB (Merge Analysis)	NW
4701	1	45.819624	I-26 WB (Basic Analysis)	NW
4701	2	44.284431	I-26 WB (Basic Analysis)	NW
4701	3	44.930463	I-26 WB (Basic Analysis)	NW
4701	4	48.382911	I-26 WB (Basic Analysis)	NW
4701	5	45.173593	I-26 WB (Basic Analysis)	NW
4701	6	46.632374	I-26 WB (Basic Analysis)	NW
4701	7	45.131913	I-26 WB (Basic Analysis)	NW
4701	8	47.299245	I-26 WB (Basic Analysis)	NW
4701	9	46.236419	I-26 WB (Basic Analysis)	NW
4701	10	44.61092	I-26 WB (Basic Analysis)	NW
4702	1	38.189163	I-26 WB (Diverge Analysis)	NW
4702	2	32.987761	I-26 WB (Diverge Analysis)	NW
4702	3	37.442475	I-26 WB (Diverge Analysis)	NW
4702	4	38.031882	I-26 WB (Diverge Analysis)	NW
4702	5	33.621652	I-26 WB (Diverge Analysis)	NW
4702	6	34.352454	I-26 WB (Diverge Analysis)	NW
4702	7	34.94345	I-26 WB (Diverge Analysis)	NW
4702	8	37.121557	I-26 WB (Diverge Analysis)	NW
4702	9	38.15739	I-26 WB (Diverge Analysis)	NW
4702	10	38.475129	I-26 WB (Diverge Analysis)	NW
4703	1	38.189163	I-26 WB (Diverge Analysis)	NW
4703	2	32.987761	I-26 WB (Diverge Analysis)	NW
4703	3	37.442475	I-26 WB (Diverge Analysis)	NW
4703	4	38.031882	I-26 WB (Diverge Analysis)	NW
4703	5	33.621652	I-26 WB (Diverge Analysis)	NW
4703	6	34.352454	I-26 WB (Diverge Analysis)	NW
4703	7	34.94345	I-26 WB (Diverge Analysis)	NW
4703	8	37.121557	I-26 WB (Diverge Analysis)	NW
4703	9	38.15739	I-26 WB (Diverge Analysis)	NW
4703	10	38.475129	I-26 WB (Diverge Analysis)	NW
4705	1	36.691651	I-26 EB (Merge Analysis)	SE
4705	2	43.502595	I-26 EB (Merge Analysis)	SE
4705	3	34.778186	I-26 EB (Merge Analysis)	SE
4705	4	37.516537	I-26 EB (Merge Analysis)	SE
4705	5	55.071284	I-26 EB (Merge Analysis)	SE
4705	6	39.932596	I-26 EB (Merge Analysis)	SE
4705	7	37.802768	I-26 EB (Merge Analysis)	SE
4705	8	34.992296	I-26 EB (Merge Analysis)	SE
4705	9	48.828294	I-26 EB (Merge Analysis)	SE
4705	10	67.248494	I-26 EB (Merge Analysis)	SE
4706	1	36.691651	I-26 EB (Merge Analysis)	SE
4706	2	43.502595	I-26 EB (Merge Analysis)	SE
4706	3	34.778186	I-26 EB (Merge Analysis)	SE
4706	4	37.516537	I-26 EB (Merge Analysis)	SE
4706	5	55.071284	I-26 EB (Merge Analysis)	SE
4706	6	39.932596	I-26 EB (Merge Analysis)	SE
4706	7	37.802768	I-26 EB (Merge Analysis)	SE
4706	8	34.992296	I-26 EB (Merge Analysis)	SE
4706	9	48.828294	I-26 EB (Merge Analysis)	SE
4706	10	67.248494	I-26 EB (Merge Analysis)	SE
4707	1	38.629055	I-26 EB (Diverge Analysis)	SE
4707	2	47.094653	I-26 EB (Diverge Analysis)	SE
4707	3	35.255723	I-26 EB (Diverge Analysis)	SE
4707	4	38.083455	I-26 EB (Diverge Analysis)	SE

ID	Run	Density	Name (Type)	Direction
4707	5	52.747184	I-26 EB (Diverge Analysis)	SE
4707	6	45.73652	I-26 EB (Diverge Analysis)	SE
4707	7	37.141855	I-26 EB (Diverge Analysis)	SE
4707	8	35.909856	I-26 EB (Diverge Analysis)	SE
4707	9	51.556251	I-26 EB (Diverge Analysis)	SE
4707	10	64.116781	I-26 EB (Diverge Analysis)	SE
4712	1	35.19115	I-26 WB (Basic Analysis)	NW
4712	2	35.634659	I-26 WB (Basic Analysis)	NW
4712	3	34.058897	I-26 WB (Basic Analysis)	NW
4712	4	34.760685	I-26 WB (Basic Analysis)	NW
4712	5	34.484144	I-26 WB (Basic Analysis)	NW
4712	6	35.418122	I-26 WB (Basic Analysis)	NW
4712	7	35.089403	I-26 WB (Basic Analysis)	NW
4712	8	34.56241	I-26 WB (Basic Analysis)	NW
4712	9	35.407686	I-26 WB (Basic Analysis)	NW
4712	10	33.764094	I-26 WB (Basic Analysis)	NW
4714	1	31.092947	I-26 EB (Basic Analysis)	SE
4714	2	31.18542	I-26 EB (Basic Analysis)	SE
4714	3	29.793179	I-26 EB (Basic Analysis)	SE
4714	4	29.966567	I-26 EB (Basic Analysis)	SE
4714	5	37.564811	I-26 EB (Basic Analysis)	SE
4714	6	30.318481	I-26 EB (Basic Analysis)	SE
4714	7	30.771858	I-26 EB (Basic Analysis)	SE
4714	8	30.357011	I-26 EB (Basic Analysis)	SE
4714	9	30.443063	I-26 EB (Basic Analysis)	SE
4714	10	50.76541	I-26 EB (Basic Analysis)	SE
4718	1	32.780343	I-26 EB (Merge Analysis)	SE
4718	2	30.311805	I-26 EB (Merge Analysis)	SE
4718	3	30.797942	I-26 EB (Merge Analysis)	SE
4718	4	31.170514	I-26 EB (Merge Analysis)	SE
4718	5	31.654658	I-26 EB (Merge Analysis)	SE
4718	6	30.849743	I-26 EB (Merge Analysis)	SE
4718	7	30.770049	I-26 EB (Merge Analysis)	SE
4718	8	29.490952	I-26 EB (Merge Analysis)	SE
4718	9	31.901711	I-26 EB (Merge Analysis)	SE
4718	10	32.357962	I-26 EB (Merge Analysis)	SE
4719	1	32.780343	I-26 EB (Merge Analysis)	SE
4719	2	30.311805	I-26 EB (Merge Analysis)	SE
4719	3	30.797942	I-26 EB (Merge Analysis)	SE
4719	4	31.170514	I-26 EB (Merge Analysis)	SE
4719	5	31.654658	I-26 EB (Merge Analysis)	SE
4719	6	30.849743	I-26 EB (Merge Analysis)	SE
4719	7	30.770049	I-26 EB (Merge Analysis)	SE
4719	8	29.490952	I-26 EB (Merge Analysis)	SE
4719	9	31.901711	I-26 EB (Merge Analysis)	SE
4719	10	32.357962	I-26 EB (Merge Analysis)	SE
4720	1	31.902924	I-26 EB (Diverge Analysis)	SE
4720	2	30.544791	I-26 EB (Diverge Analysis)	SE
4720	3	30.084258	I-26 EB (Diverge Analysis)	SE
4720	4	30.902657	I-26 EB (Diverge Analysis)	SE
4720	5	31.627191	I-26 EB (Diverge Analysis)	SE
4720	6	31.503991	I-26 EB (Diverge Analysis)	SE
4720	7	30.266124	I-26 EB (Diverge Analysis)	SE
4720	8	31.87359	I-26 EB (Diverge Analysis)	SE
4720	9	31.081591	I-26 EB (Diverge Analysis)	SE
4720	10	33.90639	I-26 EB (Diverge Analysis)	SE
4725	1	37.491427	I-26 WB (Merge Analysis)	NW
4725	2	35.884351	I-26 WB (Merge Analysis)	NW
4725	3	36.625899	I-26 WB (Merge Analysis)	NW
4725	4	37.213055	I-26 WB (Merge Analysis)	NW
4725	5	35.243392	I-26 WB (Merge Analysis)	NW
4725	6	37.301947	I-26 WB (Merge Analysis)	NW
4725	7	36.532328	I-26 WB (Merge Analysis)	NW
4725	8	37.659854	I-26 WB (Merge Analysis)	NW

ID	Run	Density	Name (Type)	Direction
4725	9	35.315909	I-26 WB (Merge Analysis)	NW
4725	10	35.818852	I-26 WB (Merge Analysis)	NW
4726	1		I-26 WB (Basic Analysis)	NW
4726	2		I-26 WB (Basic Analysis)	NW
4726	3		I-26 WB (Basic Analysis)	NW
4726	4		I-26 WB (Basic Analysis)	NW
4726	5		I-26 WB (Basic Analysis)	NW
4726	6		I-26 WB (Basic Analysis)	NW
4726	7		I-26 WB (Basic Analysis)	NW
4726	8		I-26 WB (Basic Analysis)	NW
4726	9		I-26 WB (Basic Analysis)	NW
4726	10		I-26 WB (Basic Analysis)	NW
4727	1	38.758626	I-26 WB (Diverge Analysis)	NW
4727	2	35.819925	I-26 WB (Diverge Analysis)	NW
4727	3	36.017121	I-26 WB (Diverge Analysis)	NW
4727	4	38.6961	I-26 WB (Diverge Analysis)	NW
4727	5	36.849192	I-26 WB (Diverge Analysis)	NW
4727	6	38.833176	I-26 WB (Diverge Analysis)	NW
4727	7	38.395497	I-26 WB (Diverge Analysis)	NW
4727	8	38.308923	I-26 WB (Diverge Analysis)	NW
4727	9	37.572741	I-26 WB (Diverge Analysis)	NW
4727	10	36.077242	I-26 WB (Diverge Analysis)	NW
4728	1	38.903986	I-26 WB (Basic Analysis)	NW
4728	2	37.28903	I-26 WB (Basic Analysis)	NW
4728	3	38.314092	I-26 WB (Basic Analysis)	NW
4728	4	41.108835	I-26 WB (Basic Analysis)	NW
4728	5	39.880695	I-26 WB (Basic Analysis)	NW
4728	6	37.666175	I-26 WB (Basic Analysis)	NW
4728	7	41.466639	I-26 WB (Basic Analysis)	NW
4728	8	38.5075	I-26 WB (Basic Analysis)	NW
4728	9	39.609924	I-26 WB (Basic Analysis)	NW
4728	10	38.565522	I-26 WB (Basic Analysis)	NW
4729	1	28.917703	I-26 WB (Diverge Analysis)	NW
4729	2	28.664058	I-26 WB (Diverge Analysis)	NW
4729	3	26.915012	I-26 WB (Diverge Analysis)	NW
4729	4	27.828133	I-26 WB (Diverge Analysis)	NW
4729	5	27.907535	I-26 WB (Diverge Analysis)	NW
4729	6	28.525105	I-26 WB (Diverge Analysis)	NW
4729	7	29.032394	I-26 WB (Diverge Analysis)	NW
4729	8	27.519348	I-26 WB (Diverge Analysis)	NW
4729	9	27.435535	I-26 WB (Diverge Analysis)	NW
4729	10	27.757554	I-26 WB (Diverge Analysis)	NW
4730	1	28.917703	I-26 WB (Diverge Analysis)	NW
4730	2	28.664058	I-26 WB (Diverge Analysis)	NW
4730	3	26.915012	I-26 WB (Diverge Analysis)	NW
4730	4	27.828133	I-26 WB (Diverge Analysis)	NW
4730	5	27.907535	I-26 WB (Diverge Analysis)	NW
4730	6	28.525105	I-26 WB (Diverge Analysis)	NW
4730	7	29.032394	I-26 WB (Diverge Analysis)	NW
4730	8	27.519348	I-26 WB (Diverge Analysis)	NW
4730	9	27.435535	I-26 WB (Diverge Analysis)	NW
4730	10	27.757554	I-26 WB (Diverge Analysis)	NW
4732	1	31.294005	I-26 WB (Basic Analysis)	NW
4732	2	31.609405	I-26 WB (Basic Analysis)	NW
4732	3	31.3866	I-26 WB (Basic Analysis)	NW
4732	4	31.623873	I-26 WB (Basic Analysis)	NW
4732	5	30.784736	I-26 WB (Basic Analysis)	NW
4732	6	30.405678	I-26 WB (Basic Analysis)	NW
4732	7	31.788807	I-26 WB (Basic Analysis)	NW

No Build PM

ID	Run	Density	Name (Type)	Direction
4732	8	31.597831	I-26 WB (Basic Analysis)	NW
4732	9	30.680568	I-26 WB (Basic Analysis)	NW
4732	10	31.502343	I-26 WB (Basic Analysis)	NW
4733	1	27.587079	I-26 EB (Basic Analysis)	SE
4733	2	28.836786	I-26 EB (Basic Analysis)	SE
4733	3	27.714388	I-26 EB (Basic Analysis)	SE
4733	4	26.905067	I-26 EB (Basic Analysis)	SE
4733	5	26.997301	I-26 EB (Basic Analysis)	SE
4733	6	27.522126	I-26 EB (Basic Analysis)	SE
4733	7	25.832034	I-26 EB (Basic Analysis)	SE
4733	8	27.953417	I-26 EB (Basic Analysis)	SE
4733	9	27.331162	I-26 EB (Basic Analysis)	SE
4733	10	28.506822	I-26 EB (Basic Analysis)	SE
4736	1	31.053841	I-26 EB (Basic Analysis)	SE
4736	2	25.571682	I-26 EB (Basic Analysis)	SE
4736	3	29.330303	I-26 EB (Basic Analysis)	SE
4736	4	28.888112	I-26 EB (Basic Analysis)	SE
4736	5	29.506174	I-26 EB (Basic Analysis)	SE
4736	6	29.767468	I-26 EB (Basic Analysis)	SE
4736	7	30.244833	I-26 EB (Basic Analysis)	SE
4736	8	27.154524	I-26 EB (Basic Analysis)	SE
4736	9	27.928357	I-26 EB (Basic Analysis)	SE
4736	10	28.099204	I-26 EB (Basic Analysis)	SE
4737	1	24.493891	I-26 EB (Diverge Analysis)	SE
4737	2	23.280808	I-26 EB (Diverge Analysis)	SE
4737	3	21.988665	I-26 EB (Diverge Analysis)	SE
4737	4	21.534068	I-26 EB (Diverge Analysis)	SE
4737	5	23.107864	I-26 EB (Diverge Analysis)	SE
4737	6	23.720582	I-26 EB (Diverge Analysis)	SE
4737	7	22.93739	I-26 EB (Diverge Analysis)	SE
4737	8	22.505028	I-26 EB (Diverge Analysis)	SE
4737	9	22.361731	I-26 EB (Diverge Analysis)	SE
4737	10	24.963312	I-26 EB (Diverge Analysis)	SE
4739	1	24.357521	I-26 WB (Weaving Analysis)	NW
4739	2	25.308338	I-26 WB (Weaving Analysis)	NW
4739	3	26.346367	I-26 WB (Weaving Analysis)	NW
4739	4	26.642036	I-26 WB (Weaving Analysis)	NW
4739	5	25.982632	I-26 WB (Weaving Analysis)	NW
4739	6	25.119026	I-26 WB (Weaving Analysis)	NW
4739	7	25.291322	I-26 WB (Weaving Analysis)	NW
4739	8	24.638299	I-26 WB (Weaving Analysis)	NW
4739	9	25.467872	I-26 WB (Weaving Analysis)	NW
4739	10	24.916951	I-26 WB (Weaving Analysis)	NW
4741	1	32.067247	I-26 WB (Basic Analysis)	NW
4741	2	32.802845	I-26 WB (Basic Analysis)	NW
4741	3	31.10531	I-26 WB (Basic Analysis)	NW
4741	4	31.929827	I-26 WB (Basic Analysis)	NW
4741	5	31.687322	I-26 WB (Basic Analysis)	NW
4741	6	34.257875	I-26 WB (Basic Analysis)	NW
4741	7	31.832825	I-26 WB (Basic Analysis)	NW
4741	8	30.183791	I-26 WB (Basic Analysis)	NW
4741	9	34.338711	I-26 WB (Basic Analysis)	NW
4741	10	31.590321	I-26 WB (Basic Analysis)	NW
4742	1	21.28573	I-26 WB (Diverge Analysis)	NW
4742	2	20.693115	I-26 WB (Diverge Analysis)	NW
4742	3	21.1566	I-26 WB (Diverge Analysis)	NW
4742	4	22.143524	I-26 WB (Diverge Analysis)	NW

No Build PM

ID	Run	Density	Name (Type)	Direction
4742	5	20.889116	I-26 WB (Diverge Analysis)	NW
4742	6	21.873734	I-26 WB (Diverge Analysis)	NW
4742	7	22.761504	I-26 WB (Diverge Analysis)	NW
4742	8	21.244224	I-26 WB (Diverge Analysis)	NW
4742	9	21.716933	I-26 WB (Diverge Analysis)	NW
4742	10	20.861445	I-26 WB (Diverge Analysis)	NW
4745	1	25.862642	I-26 EB (Basic Analysis)	SE
4745	2	26.867837	I-26 EB (Basic Analysis)	SE
4745	3	22.292789	I-26 EB (Basic Analysis)	SE
4745	4	23.69881	I-26 EB (Basic Analysis)	SE
4745	5	24.240551	I-26 EB (Basic Analysis)	SE
4745	6	22.543305	I-26 EB (Basic Analysis)	SE
4745	7	23.63305	I-26 EB (Basic Analysis)	SE
4745	8	24.074584	I-26 EB (Basic Analysis)	SE
4745	9	22.577751	I-26 EB (Basic Analysis)	SE
4745	10	23.432637	I-26 EB (Basic Analysis)	SE
4748	1	24.072796	I-26 EB (Weaving Analysis)	SE
4748	2	24.763762	I-26 EB (Weaving Analysis)	SE
4748	3	26.206861	I-26 EB (Weaving Analysis)	SE
4748	4	23.409015	I-26 EB (Weaving Analysis)	SE
4748	5	24.503234	I-26 EB (Weaving Analysis)	SE
4748	6	22.964985	I-26 EB (Weaving Analysis)	SE
4748	7	23.655951	I-26 EB (Weaving Analysis)	SE
4748	8	22.831323	I-26 EB (Weaving Analysis)	SE
4748	9	24.906486	I-26 EB (Weaving Analysis)	SE
4748	10	22.756562	I-26 EB (Weaving Analysis)	SE
4753	1	26.92634	I-26 WB (Basic Analysis)	NW
4753	2	26.834055	I-26 WB (Basic Analysis)	NW
4753	3	24.360797	I-26 WB (Basic Analysis)	NW
4753	4	26.26452	I-26 WB (Basic Analysis)	NW
4753	5	26.164324	I-26 WB (Basic Analysis)	NW
4753	6	26.546651	I-26 WB (Basic Analysis)	NW
4753	7	27.574977	I-26 WB (Basic Analysis)	NW
4753	8	25.223009	I-26 WB (Basic Analysis)	NW
4753	9	26.702218	I-26 WB (Basic Analysis)	NW
4753	10	26.172234	I-26 WB (Basic Analysis)	NW
4755	1	26.111241	I-26 EB (Basic Analysis)	SE
4755	2	22.824862	I-26 EB (Basic Analysis)	SE
4755	3	23.113362	I-26 EB (Basic Analysis)	SE
4755	4	24.744007	I-26 EB (Basic Analysis)	SE
4755	5	22.406748	I-26 EB (Basic Analysis)	SE
4755	6	29.02968	I-26 EB (Basic Analysis)	SE
4755	7	26.098698	I-26 EB (Basic Analysis)	SE
4755	8	23.636004	I-26 EB (Basic Analysis)	SE
4755	9	25.162122	I-26 EB (Basic Analysis)	SE
4755	10	26.320299	I-26 EB (Basic Analysis)	SE
4756	1	22.344567	I-26 EB (Diverge Analysis)	SE
4756	2	21.368969	I-26 EB (Diverge Analysis)	SE
4756	3	18.362486	I-26 EB (Diverge Analysis)	SE
4756	4	18.93722	I-26 EB (Diverge Analysis)	SE
4756	5	20.878755	I-26 EB (Diverge Analysis)	SE
4756	6	20.922223	I-26 EB (Diverge Analysis)	SE
4756	7	18.572578	I-26 EB (Diverge Analysis)	SE
4756	8	19.147311	I-26 EB (Diverge Analysis)	SE
4756	9	18.601556	I-26 EB (Diverge Analysis)	SE
4756	10	21.789152	I-26 EB (Diverge Analysis)	SE
4760	1	19.81621	I-26 WB (Basic Analysis)	NW

No Build PM

ID	Run	Density	Name (Type)	Direction
4760	2	20.584483	I-26 WB (Basic Analysis)	NW
4760	3	21.433	I-26 WB (Basic Analysis)	NW
4760	4	21.114409	I-26 WB (Basic Analysis)	NW
4760	5	20.565416	I-26 WB (Basic Analysis)	NW
4760	6	20.248413	I-26 WB (Basic Analysis)	NW
4760	7	20.431146	I-26 WB (Basic Analysis)	NW
4760	8	19.967958	I-26 WB (Basic Analysis)	NW
4760	9	20.718752	I-26 WB (Basic Analysis)	NW
4760	10	20.655193	I-26 WB (Basic Analysis)	NW
4761	1	19.81621	I-26 WB (Basic Analysis)	NW
4761	2	20.584483	I-26 WB (Basic Analysis)	NW
4761	3	21.433	I-26 WB (Basic Analysis)	NW
4761	4	21.114409	I-26 WB (Basic Analysis)	NW
4761	5	20.565416	I-26 WB (Basic Analysis)	NW
4761	6	20.248413	I-26 WB (Basic Analysis)	NW
4761	7	20.431146	I-26 WB (Basic Analysis)	NW
4761	8	19.967958	I-26 WB (Basic Analysis)	NW
4761	9	20.718752	I-26 WB (Basic Analysis)	NW
4761	10	20.655193	I-26 WB (Basic Analysis)	NW
4764	1	18.739374	I-26 WB (Basic Analysis)	NW
4764	2	19.061035	I-26 WB (Basic Analysis)	NW
4764	3	19.290825	I-26 WB (Basic Analysis)	NW
4764	4	19.501113	I-26 WB (Basic Analysis)	NW
4764	5	18.935686	I-26 WB (Basic Analysis)	NW
4764	6	18.989531	I-26 WB (Basic Analysis)	NW
4764	7	19.471428	I-26 WB (Basic Analysis)	NW
4764	8	18.531252	I-26 WB (Basic Analysis)	NW
4764	9	19.391689	I-26 WB (Basic Analysis)	NW
4764	10	18.759958	I-26 WB (Basic Analysis)	NW
4768	1	17.71016	I-26 EB (Basic Analysis)	SE
4768	2	17.076546	I-26 EB (Basic Analysis)	SE
4768	3	16.328232	I-26 EB (Basic Analysis)	SE
4768	4	16.386722	I-26 EB (Basic Analysis)	SE
4768	5	16.734184	I-26 EB (Basic Analysis)	SE
4768	6	17.05289	I-26 EB (Basic Analysis)	SE
4768	7	16.669509	I-26 EB (Basic Analysis)	SE
4768	8	16.768908	I-26 EB (Basic Analysis)	SE
4768	9	16.551446	I-26 EB (Basic Analysis)	SE
4768	10	16.991254	I-26 EB (Basic Analysis)	SE
4769	1	15.635609	I-26 EB (Diverge Analysis)	SE
4769	2	15.802305	I-26 EB (Diverge Analysis)	SE
4769	3	16.448254	I-26 EB (Diverge Analysis)	SE
4769	4	14.9558	I-26 EB (Diverge Analysis)	SE
4769	5	16.312813	I-26 EB (Diverge Analysis)	SE
4769	6	16.904065	I-26 EB (Diverge Analysis)	SE
4769	7	15.273565	I-26 EB (Diverge Analysis)	SE
4769	8	15.481935	I-26 EB (Diverge Analysis)	SE
4769	9	14.893289	I-26 EB (Diverge Analysis)	SE
4769	10	15.170744	I-26 EB (Diverge Analysis)	SE
6149	1	18.556614	I-26 EB (Merge Analysis)	S
6149	2	17.928753	I-26 EB (Merge Analysis)	S
6149	3	18.815145	I-26 EB (Merge Analysis)	S
6149	4	17.925799	I-26 EB (Merge Analysis)	S
6149	5	18.776735	I-26 EB (Merge Analysis)	S
6149	6	19.67199	I-26 EB (Merge Analysis)	S
6149	7	19.813813	I-26 EB (Merge Analysis)	S
6149	8	18.215353	I-26 EB (Merge Analysis)	S

No Build PM

ID	Run	Density	Name (Type)	Direction
6149	9	18.175466	I-26 EB (Merge Analysis)	S
6149	10	18.556614	I-26 EB (Merge Analysis)	S
6150	1	18.556614	I-26 EB (Merge Analysis)	S
6150	2	17.928753	I-26 EB (Merge Analysis)	S
6150	3	18.815145	I-26 EB (Merge Analysis)	S
6150	4	17.925799	I-26 EB (Merge Analysis)	S
6150	5	18.776735	I-26 EB (Merge Analysis)	S
6150	6	19.67199	I-26 EB (Merge Analysis)	S
6150	7	19.813813	I-26 EB (Merge Analysis)	S
6150	8	18.215353	I-26 EB (Merge Analysis)	S
6150	9	18.175466	I-26 EB (Merge Analysis)	S
6150	10	18.556614	I-26 EB (Merge Analysis)	S
6151	1	23.968994	I-26 EB (Basic Analysis)	S
6151	2	23.156068	I-26 EB (Basic Analysis)	S
6151	3	24.240218	I-26 EB (Basic Analysis)	S
6151	4	24.071838	I-26 EB (Basic Analysis)	S
6151	5	24.220829	I-26 EB (Basic Analysis)	S
6151	6	24.784941	I-26 EB (Basic Analysis)	S
6151	7	26.785804	I-26 EB (Basic Analysis)	S
6151	8	23.54397	I-26 EB (Basic Analysis)	S
6151	9	24.296356	I-26 EB (Basic Analysis)	S
6151	10	23.909831	I-26 EB (Basic Analysis)	S
6152	1	23.968994	I-26 EB (Basic Analysis)	S
6152	2	23.156068	I-26 EB (Basic Analysis)	S
6152	3	24.240218	I-26 EB (Basic Analysis)	S
6152	4	24.071838	I-26 EB (Basic Analysis)	S
6152	5	24.220829	I-26 EB (Basic Analysis)	S
6152	6	24.784941	I-26 EB (Basic Analysis)	S
6152	7	26.785804	I-26 EB (Basic Analysis)	S
6152	8	23.54397	I-26 EB (Basic Analysis)	S
6152	9	24.296356	I-26 EB (Basic Analysis)	S
6152	10	23.909831	I-26 EB (Basic Analysis)	S
6159	1	98.163886	I-26 WB (Diverge Analysis)	N
6159	2	93.231963	I-26 WB (Diverge Analysis)	N
6159	3	87.553664	I-26 WB (Diverge Analysis)	N
6159	4	110.227133	I-26 WB (Diverge Analysis)	N
6159	5	118.399617	I-26 WB (Diverge Analysis)	N
6159	6	113.053738	I-26 WB (Diverge Analysis)	N
6159	7	102.543869	I-26 WB (Diverge Analysis)	N
6159	8	97.083002	I-26 WB (Diverge Analysis)	N
6159	9	105.951684	I-26 WB (Diverge Analysis)	N
6159	10	103.971806	I-26 WB (Diverge Analysis)	N
6160	1	98.163886	I-26 WB (Diverge Analysis)	N
6160	2	93.231963	I-26 WB (Diverge Analysis)	N
6160	3	87.553664	I-26 WB (Diverge Analysis)	N
6160	4	110.227133	I-26 WB (Diverge Analysis)	N
6160	5	118.399617	I-26 WB (Diverge Analysis)	N
6160	6	113.053738	I-26 WB (Diverge Analysis)	N
6160	7	102.543869	I-26 WB (Diverge Analysis)	N
6160	8	97.083002	I-26 WB (Diverge Analysis)	N
6160	9	105.951684	I-26 WB (Diverge Analysis)	N
6160	10	103.971806	I-26 WB (Diverge Analysis)	N
6165	1	87.514329	I-26 WB (Basic Analysis)	N
6165	2	67.892882	I-26 WB (Basic Analysis)	N
6165	3	64.864704	I-26 WB (Basic Analysis)	N
6165	4	58.532956	I-26 WB (Basic Analysis)	N
6165	5	54.843151	I-26 WB (Basic Analysis)	N

ID	Run	Density	Name (Type)	Direction
6165	6	84.015356	I-26 WB (Basic Analysis)	N
6165	7	108.049943	I-26 WB (Basic Analysis)	N
6165	8	93.023326	I-26 WB (Basic Analysis)	N
6165	9	94.45971	I-26 WB (Basic Analysis)	N
6165	10	86.075659	I-26 WB (Basic Analysis)	N
6166	1	20.819915	I-26 EB (Basic Analysis)	S
6166	2	20.465937	I-26 EB (Basic Analysis)	S
6166	3	20.15651	I-26 EB (Basic Analysis)	S
6166	4	20.222932	I-26 EB (Basic Analysis)	S
6166	5	20.346864	I-26 EB (Basic Analysis)	S
6166	6	20.346864	I-26 EB (Basic Analysis)	S
6166	7	20.920358	I-26 EB (Basic Analysis)	S
6166	8	19.398332	I-26 EB (Basic Analysis)	S
6166	9	20.022047	I-26 EB (Basic Analysis)	S
6166	10	20.856366	I-26 EB (Basic Analysis)	S
6174	1	89.958013	I-26 WB (Basic Analysis)	N
6174	2	85.290238	I-26 WB (Basic Analysis)	N
6174	3	85.996837	I-26 WB (Basic Analysis)	N
6174	4	88.820598	I-26 WB (Basic Analysis)	N
6174	5	88.348653	I-26 WB (Basic Analysis)	N
6174	6	95.280182	I-26 WB (Basic Analysis)	N
6174	7	98.388692	I-26 WB (Basic Analysis)	N
6174	8	96.095408	I-26 WB (Basic Analysis)	N
6174	9	100.038127	I-26 WB (Basic Analysis)	N
6174	10	96.66016	I-26 WB (Basic Analysis)	N
6175	1	89.958013	I-26 WB (Basic Analysis)	N
6175	2	85.290238	I-26 WB (Basic Analysis)	N
6175	3	85.996837	I-26 WB (Basic Analysis)	N
6175	4	88.820598	I-26 WB (Basic Analysis)	N
6175	5	88.348653	I-26 WB (Basic Analysis)	N
6175	6	95.280182	I-26 WB (Basic Analysis)	N
6175	7	98.388692	I-26 WB (Basic Analysis)	N
6175	8	96.095408	I-26 WB (Basic Analysis)	N
6175	9	100.038127	I-26 WB (Basic Analysis)	N
6175	10	96.66016	I-26 WB (Basic Analysis)	N
6177	1	134.151739	I-26 EB (Basic Analysis)	S
6177	2	123.924875	I-26 EB (Basic Analysis)	S
6177	3	115.282612	I-26 EB (Basic Analysis)	S
6177	4	122.012115	I-26 EB (Basic Analysis)	S
6177	5	108.38004	I-26 EB (Basic Analysis)	S
6177	6	122.495362	I-26 EB (Basic Analysis)	S
6177	7	121.441209	I-26 EB (Basic Analysis)	S
6177	8	120.616316	I-26 EB (Basic Analysis)	S
6177	9	117.80449	I-26 EB (Basic Analysis)	S
6177	10	133.924726	I-26 EB (Basic Analysis)	S
6178	1	143.093011	I-26 EB (Diverge Analysis)	S
6178	2	140.113545	I-26 EB (Diverge Analysis)	S
6178	3	139.138732	I-26 EB (Diverge Analysis)	S
6178	4	141.342541	I-26 EB (Diverge Analysis)	S
6178	5	128.124926	I-26 EB (Diverge Analysis)	S
6178	6	139.314304	I-26 EB (Diverge Analysis)	S
6178	7	142.390727	I-26 EB (Diverge Analysis)	S
6178	8	145.354471	I-26 EB (Diverge Analysis)	S
6178	9	140.118784	I-26 EB (Diverge Analysis)	S
6178	10	141.460463	I-26 EB (Diverge Analysis)	S
6185	1	121.683015	I-26 EB (Merge Analysis)	S
6185	2	121.067093	I-26 EB (Merge Analysis)	S

ID	Run	Density	Name (Type)	Direction
6185	3	108.602577	I-26 EB (Merge Analysis)	S
6185	4	112.684843	I-26 EB (Merge Analysis)	S
6185	5	100.853435	I-26 EB (Merge Analysis)	S
6185	6	109.911767	I-26 EB (Merge Analysis)	S
6185	7	115.417811	I-26 EB (Merge Analysis)	S
6185	8	118.6693	I-26 EB (Merge Analysis)	S
6185	9	113.091636	I-26 EB (Merge Analysis)	S
6185	10	127.825033	I-26 EB (Merge Analysis)	S
6186	1	122.187454	I-26 EB (Basic Analysis)	S
6186	2	117.760476	I-26 EB (Basic Analysis)	S
6186	3	105.32126	I-26 EB (Basic Analysis)	S
6186	4	110.34764	I-26 EB (Basic Analysis)	S
6186	5	100.108361	I-26 EB (Basic Analysis)	S
6186	6	108.256105	I-26 EB (Basic Analysis)	S
6186	7	112.482218	I-26 EB (Basic Analysis)	S
6186	8	116.271533	I-26 EB (Basic Analysis)	S
6186	9	112.16498	I-26 EB (Basic Analysis)	S
6186	10	123.941028	I-26 EB (Basic Analysis)	S
6200	1	124.550523	I-26 WB (Weaving Analysis)	NW
6200	2	128.361062	I-26 WB (Weaving Analysis)	NW
6200	3	122.572572	I-26 WB (Weaving Analysis)	NW
6200	4	129.143423	I-26 WB (Weaving Analysis)	NW
6200	5	127.270003	I-26 WB (Weaving Analysis)	NW
6200	6	131.433339	I-26 WB (Weaving Analysis)	NW
6200	7	133.053593	I-26 WB (Weaving Analysis)	NW
6200	8	131.082173	I-26 WB (Weaving Analysis)	NW
6200	9	128.197728	I-26 WB (Weaving Analysis)	NW
6200	10	132.761228	I-26 WB (Weaving Analysis)	NW
6204	1	117.707512	I-26 WB (Basic Analysis)	NW
6204	2	118.750457	I-26 WB (Basic Analysis)	NW
6204	3	115.47824	I-26 WB (Basic Analysis)	NW
6204	4	123.690209	I-26 WB (Basic Analysis)	NW
6204	5	120.659578	I-26 WB (Basic Analysis)	NW
6204	6	126.009831	I-26 WB (Basic Analysis)	NW
6204	7	117.530741	I-26 WB (Basic Analysis)	NW
6204	8	122.884921	I-26 WB (Basic Analysis)	NW
6204	9	121.67699	I-26 WB (Basic Analysis)	NW
6204	10	108.438848	I-26 WB (Basic Analysis)	NW
6205	1	35.296978	I-20 EB (Basic Analysis)	E
6205	2	46.426397	I-20 EB (Basic Analysis)	E
6205	3	78.180186	I-20 EB (Basic Analysis)	E
6205	4	24.521436	I-20 EB (Basic Analysis)	E
6205	5	24.674045	I-20 EB (Basic Analysis)	E
6205	6	26.695565	I-20 EB (Basic Analysis)	E
6205	7	63.474402	I-20 EB (Basic Analysis)	E
6205	8	49.624557	I-20 EB (Basic Analysis)	E
6205	9	72.684041	I-20 EB (Basic Analysis)	E
6205	10	76.114432	I-20 EB (Basic Analysis)	E
6206	1	54.010173	I-20 EB (Merge Analysis)	E
6206	2	82.608367	I-20 EB (Merge Analysis)	E
6206	3	102.122525	I-20 EB (Merge Analysis)	E
6206	4	51.157642	I-20 EB (Merge Analysis)	E
6206	5	23.306192	I-20 EB (Merge Analysis)	E
6206	6	48.190104	I-20 EB (Merge Analysis)	E
6206	7	86.881493	I-20 EB (Merge Analysis)	E
6206	8	77.682447	I-20 EB (Merge Analysis)	E
6206	9	87.21032	I-20 EB (Merge Analysis)	E

ID	Run	Density	Name (Type)	Direction
6206	10	101.064772	I-20 EB (Merge Analysis)	E
6207	1	54.010173	I-20 EB (Merge Analysis)	E
6207	2	82.608367	I-20 EB (Merge Analysis)	E
6207	3	102.122525	I-20 EB (Merge Analysis)	E
6207	4	51.157642	I-20 EB (Merge Analysis)	E
6207	5	23.306192	I-20 EB (Merge Analysis)	E
6207	6	48.190104	I-20 EB (Merge Analysis)	E
6207	7	86.881493	I-20 EB (Merge Analysis)	E
6207	8	77.682447	I-20 EB (Merge Analysis)	E
6207	9	87.21032	I-20 EB (Merge Analysis)	E
6207	10	101.064772	I-20 EB (Merge Analysis)	E
6208	1	52.252119	I-20 EB (Diverge Analysis)	E
6208	2	78.895023	I-20 EB (Diverge Analysis)	E
6208	3	97.670234	I-20 EB (Diverge Analysis)	E
6208	4	50.042831	I-20 EB (Diverge Analysis)	E
6208	5	23.83312	I-20 EB (Diverge Analysis)	E
6208	6	47.282342	I-20 EB (Diverge Analysis)	E
6208	7	83.229947	I-20 EB (Diverge Analysis)	E
6208	8	75.038106	I-20 EB (Diverge Analysis)	E
6208	9	83.540652	I-20 EB (Diverge Analysis)	E
6208	10	96.530488	I-20 EB (Diverge Analysis)	E
6209	1	52.252119	I-20 EB (Diverge Analysis)	E
6209	2	78.895023	I-20 EB (Diverge Analysis)	E
6209	3	97.670234	I-20 EB (Diverge Analysis)	E
6209	4	50.042831	I-20 EB (Diverge Analysis)	E
6209	5	23.83312	I-20 EB (Diverge Analysis)	E
6209	6	47.282342	I-20 EB (Diverge Analysis)	E
6209	7	83.229947	I-20 EB (Diverge Analysis)	E
6209	8	75.038106	I-20 EB (Diverge Analysis)	E
6209	9	83.540652	I-20 EB (Diverge Analysis)	E
6209	10	96.530488	I-20 EB (Diverge Analysis)	E
6216	1	55.202557	I-20 EB (Merge Analysis)	E
6216	2	16.990198	I-20 EB (Merge Analysis)	E
6216	3	26.449115	I-20 EB (Merge Analysis)	E
6216	4	51.292733	I-20 EB (Merge Analysis)	E
6216	5	25.95032	I-20 EB (Merge Analysis)	E
6216	6	15.849725	I-20 EB (Merge Analysis)	E
6216	7	47.330951	I-20 EB (Merge Analysis)	E
6216	8	15.95364	I-20 EB (Merge Analysis)	E
6216	9	16.057556	I-20 EB (Merge Analysis)	E
6216	10	21.549495	I-20 EB (Merge Analysis)	E
6217	1	21.883736	I-20 EB (Basic Analysis)	E
6217	2	21.121587	I-20 EB (Basic Analysis)	E
6217	3	19.880878	I-20 EB (Basic Analysis)	E
6217	4	22.137786	I-20 EB (Basic Analysis)	E
6217	5	22.075751	I-20 EB (Basic Analysis)	E
6217	6	22.453871	I-20 EB (Basic Analysis)	E
6217	7	23.871824	I-20 EB (Basic Analysis)	E
6217	8	22.359341	I-20 EB (Basic Analysis)	E
6217	9	21.490845	I-20 EB (Basic Analysis)	E
6217	10	24.781677	I-20 EB (Basic Analysis)	E
6220	1	18.848442	I-20 WB (Basic Analysis)	W
6220	2	19.127585	I-20 WB (Basic Analysis)	W
6220	3	19.562966	I-20 WB (Basic Analysis)	W
6220	4	20.129586	I-20 WB (Basic Analysis)	W
6220	5	20.381648	I-20 WB (Basic Analysis)	W
6220	6	20.175415	I-20 WB (Basic Analysis)	W

No Build PM

ID	Run	Density	Name (Type)	Direction
6220	7	17.236075	I-20 WB (Basic Analysis)	W
6220	8	18.298487	I-20 WB (Basic Analysis)	W
6220	9	18.533884	I-20 WB (Basic Analysis)	W
6220	10	17.117335	I-20 WB (Basic Analysis)	W
6223	1	84.311161	I-26 EB (Weaving Analysis)	SE
6223	2	83.896479	I-26 EB (Weaving Analysis)	SE
6223	3	72.873107	I-26 EB (Weaving Analysis)	SE
6223	4	92.461142	I-26 EB (Weaving Analysis)	SE
6223	5	75.204472	I-26 EB (Weaving Analysis)	SE
6223	6	71.550694	I-26 EB (Weaving Analysis)	SE
6223	7	66.620217	I-26 EB (Weaving Analysis)	SE
6223	8	74.198785	I-26 EB (Weaving Analysis)	SE
6223	9	81.434505	I-26 EB (Weaving Analysis)	SE
6223	10	83.214048	I-26 EB (Weaving Analysis)	SE
6227	1	15.76898	I-20 WB (Basic Analysis)	W
6227	2	16.877457	I-20 WB (Basic Analysis)	W
6227	3	14.201159	I-20 WB (Basic Analysis)	W
6227	4	16.954473	I-20 WB (Basic Analysis)	W
6227	5	16.019281	I-20 WB (Basic Analysis)	W
6227	6	16.06054	I-20 WB (Basic Analysis)	W
6227	7	15.590193	I-20 WB (Basic Analysis)	W
6227	8	15.095092	I-20 WB (Basic Analysis)	W
6227	9	18.084954	I-20 WB (Basic Analysis)	W
6227	10	17.686122	I-20 WB (Basic Analysis)	W
6229	1	58.461787	I-20 WB (Merge Analysis)	W
6229	2	67.130382	I-20 WB (Merge Analysis)	W
6229	3	45.737305	I-20 WB (Merge Analysis)	W
6229	4	66.047921	I-20 WB (Merge Analysis)	W
6229	5	50.194104	I-20 WB (Merge Analysis)	W
6229	6	65.255007	I-20 WB (Merge Analysis)	W
6229	7	52.167478	I-20 WB (Merge Analysis)	W
6229	8	49.274235	I-20 WB (Merge Analysis)	W
6229	9	66.468878	I-20 WB (Merge Analysis)	W
6229	10	62.802766	I-20 WB (Merge Analysis)	W
6230	1	58.461787	I-20 WB (Merge+Diverge Analysis)	W
6230	2	67.130382	I-20 WB (Merge+Diverge Analysis)	W
6230	3	45.737305	I-20 WB (Merge+Diverge Analysis)	W
6230	4	66.047921	I-20 WB (Merge+Diverge Analysis)	W
6230	5	50.194104	I-20 WB (Merge+Diverge Analysis)	W
6230	6	65.255007	I-20 WB (Merge+Diverge Analysis)	W
6230	7	52.167478	I-20 WB (Merge+Diverge Analysis)	W
6230	8	49.274235	I-20 WB (Merge+Diverge Analysis)	W
6230	9	66.468878	I-20 WB (Merge+Diverge Analysis)	W
6230	10	62.802766	I-20 WB (Merge+Diverge Analysis)	W
6231	1	59.024789	I-20 WB (Diverge Analysis)	W
6231	2	67.758555	I-20 WB (Diverge Analysis)	W
6231	3	46.165293	I-20 WB (Diverge Analysis)	W
6231	4	66.665965	I-20 WB (Diverge Analysis)	W
6231	5	50.663796	I-20 WB (Diverge Analysis)	W
6231	6	65.865632	I-20 WB (Diverge Analysis)	W
6231	7	52.655636	I-20 WB (Diverge Analysis)	W
6231	8	49.735319	I-20 WB (Diverge Analysis)	W
6231	9	67.132318	I-20 WB (Diverge Analysis)	W
6231	10	63.390444	I-20 WB (Diverge Analysis)	W
6234	1	26.442795	I-20 WB (Basic Analysis)	W
6234	2	33.207917	I-20 WB (Basic Analysis)	W
6234	3	24.305573	I-20 WB (Basic Analysis)	W

No Build PM

ID	Run	Density	Name (Type)	Direction
6234	4	31.88262	I-20 WB (Basic Analysis)	W
6234	5	25.81206	I-20 WB (Basic Analysis)	W
6234	6	30.50928	I-20 WB (Basic Analysis)	W
6234	7	26.413969	I-20 WB (Basic Analysis)	W
6234	8	22.887622	I-20 WB (Basic Analysis)	W
6234	9	31.679467	I-20 WB (Basic Analysis)	W
6234	10	28.978772	I-20 WB (Basic Analysis)	W
6238	1	24.503785	I-20 EB (Basic Analysis)	NE
6238	2	23.238221	I-20 EB (Basic Analysis)	NE
6238	3	25.53269	I-20 EB (Basic Analysis)	NE
6238	4	25.373225	I-20 EB (Basic Analysis)	NE
6238	5	23.999997	I-20 EB (Basic Analysis)	NE
6238	6	24.966944	I-20 EB (Basic Analysis)	NE
6238	7	23.659737	I-20 EB (Basic Analysis)	NE
6238	8	23.972573	I-20 EB (Basic Analysis)	NE
6238	9	25.781536	I-20 EB (Basic Analysis)	NE
6238	10	23.585591	I-20 EB (Basic Analysis)	NE
6241	1	24.629512	I-20 EB (Merge Analysis)	NE
6241	2	22.474236	I-20 EB (Merge Analysis)	NE
6241	3	22.718612	I-20 EB (Merge Analysis)	NE
6241	4	23.637704	I-20 EB (Merge Analysis)	NE
6241	5	25.751257	I-20 EB (Merge Analysis)	NE
6241	6	26.230472	I-20 EB (Merge Analysis)	NE
6241	7	22.890271	I-20 EB (Merge Analysis)	NE
6241	8	23.663929	I-20 EB (Merge Analysis)	NE
6241	9	23.396904	I-20 EB (Merge Analysis)	NE
6241	10	21.254741	I-20 EB (Merge Analysis)	NE
6242	1	24.629512	I-20 EB (Merge Analysis)	NE
6242	2	22.474236	I-20 EB (Merge Analysis)	NE
6242	3	22.718612	I-20 EB (Merge Analysis)	NE
6242	4	23.637704	I-20 EB (Merge Analysis)	NE
6242	5	25.751257	I-20 EB (Merge Analysis)	NE
6242	6	26.230472	I-20 EB (Merge Analysis)	NE
6242	7	22.890271	I-20 EB (Merge Analysis)	NE
6242	8	23.663929	I-20 EB (Merge Analysis)	NE
6242	9	23.396904	I-20 EB (Merge Analysis)	NE
6242	10	21.254741	I-20 EB (Merge Analysis)	NE
6246	1	122.520676	I-20 WB (Merge Analysis)	SW
6246	2	119.618714	I-20 WB (Merge Analysis)	SW
6246	3	128.618397	I-20 WB (Merge Analysis)	SW
6246	4	121.14782	I-20 WB (Merge Analysis)	SW
6246	5	129.175285	I-20 WB (Merge Analysis)	SW
6246	6	117.671611	I-20 WB (Merge Analysis)	SW
6246	7	133.502183	I-20 WB (Merge Analysis)	SW
6246	8	126.985126	I-20 WB (Merge Analysis)	SW
6246	9	118.714607	I-20 WB (Merge Analysis)	SW
6246	10	131.942363	I-20 WB (Merge Analysis)	SW
6247	1	122.520676	I-20 WB (Merge Analysis)	SW
6247	2	119.618714	I-20 WB (Merge Analysis)	SW
6247	3	128.618397	I-20 WB (Merge Analysis)	SW
6247	4	121.14782	I-20 WB (Merge Analysis)	SW
6247	5	129.175285	I-20 WB (Merge Analysis)	SW
6247	6	117.671611	I-20 WB (Merge Analysis)	SW
6247	7	133.502183	I-20 WB (Merge Analysis)	SW
6247	8	126.985126	I-20 WB (Merge Analysis)	SW
6247	9	118.714607	I-20 WB (Merge Analysis)	SW
6247	10	131.942363	I-20 WB (Merge Analysis)	SW

No Build PM

ID	Run	Density	Name (Type)	Direction
6249	1	118.334551	I-20 WB (Diverge Analysis)	SW
6249	2	116.154106	I-20 WB (Diverge Analysis)	SW
6249	3	118.309128	I-20 WB (Diverge Analysis)	SW
6249	4	116.531528	I-20 WB (Diverge Analysis)	SW
6249	5	120.81615	I-20 WB (Diverge Analysis)	SW
6249	6	115.172418	I-20 WB (Diverge Analysis)	SW
6249	7	132.019525	I-20 WB (Diverge Analysis)	SW
6249	8	118.588773	I-20 WB (Diverge Analysis)	SW
6249	9	122.847972	I-20 WB (Diverge Analysis)	SW
6249	10	134.970458	I-20 WB (Diverge Analysis)	SW
6251	1	131.407657	I-20 WB (Basic Analysis)	SW
6251	2	125.308871	I-20 WB (Basic Analysis)	SW
6251	3	135.160564	I-20 WB (Basic Analysis)	SW
6251	4	128.468169	I-20 WB (Basic Analysis)	SW
6251	5	138.57817	I-20 WB (Basic Analysis)	SW
6251	6	125.184685	I-20 WB (Basic Analysis)	SW
6251	7	134.775588	I-20 WB (Basic Analysis)	SW
6251	8	131.899435	I-20 WB (Basic Analysis)	SW
6251	9	120.822024	I-20 WB (Basic Analysis)	SW
6251	10	137.123949	I-20 WB (Basic Analysis)	SW
6254	1	27.186622	I-20 EB (Basic Analysis)	NE
6254	2	27.522507	I-20 EB (Basic Analysis)	NE
6254	3	29.154306	I-20 EB (Basic Analysis)	NE
6254	4	28.111559	I-20 EB (Basic Analysis)	NE
6254	5	27.250541	I-20 EB (Basic Analysis)	NE
6254	6	28.365979	I-20 EB (Basic Analysis)	NE
6254	7	27.174089	I-20 EB (Basic Analysis)	NE
6254	8	27.187876	I-20 EB (Basic Analysis)	NE
6254	9	28.307074	I-20 EB (Basic Analysis)	NE
6254	10	25.426987	I-20 EB (Basic Analysis)	NE
6258	1	25.391383	I-20 EB (Merge Analysis)	E
6258	2	22.99341	I-20 EB (Merge Analysis)	E
6258	3	25.216558	I-20 EB (Merge Analysis)	E
6258	4	24.605975	I-20 EB (Merge Analysis)	E
6258	5	25.005202	I-20 EB (Merge Analysis)	E
6258	6	25.138278	I-20 EB (Merge Analysis)	E
6258	7	23.416121	I-20 EB (Merge Analysis)	E
6258	8	24.402447	I-20 EB (Merge Analysis)	E
6258	9	24.433759	I-20 EB (Merge Analysis)	E
6258	10	22.583745	I-20 EB (Merge Analysis)	E
6259	1	29.570646	I-20 EB (Basic Analysis)	E
6259	2	29.801678	I-20 EB (Basic Analysis)	E
6259	3	29.552406	I-20 EB (Basic Analysis)	E
6259	4	30.889963	I-20 EB (Basic Analysis)	E
6259	5	30.03879	I-20 EB (Basic Analysis)	E
6259	6	30.493256	I-20 EB (Basic Analysis)	E
6259	7	29.684642	I-20 EB (Basic Analysis)	E
6259	8	29.458169	I-20 EB (Basic Analysis)	E
6259	9	31.127075	I-20 EB (Basic Analysis)	E
6259	10	27.793823	I-20 EB (Basic Analysis)	E
8539	1	27.700226	I-20 WB (Basic Analysis)	SW
8539	2	25.861816	I-20 WB (Basic Analysis)	SW
8539	3	29.850539	I-20 WB (Basic Analysis)	SW
8539	4	25.983618	I-20 WB (Basic Analysis)	SW
8539	5	25.807176	I-20 WB (Basic Analysis)	SW
8539	6	25.842464	I-20 WB (Basic Analysis)	SW
8539	7	24.129271	I-20 WB (Basic Analysis)	SW

No Build PM

ID	Run	Density	Name (Type)	Direction
8539	8	25.760504	I-20 WB (Basic Analysis)	SW
8539	9	25.835634	I-20 WB (Basic Analysis)	SW
8539	10	25.454292	I-20 WB (Basic Analysis)	SW
8542	1	24.580328	I-20 EB (Basic Analysis)	NE
8542	2	25.304915	I-20 EB (Basic Analysis)	NE
8542	3	24.085912	I-20 EB (Basic Analysis)	NE
8542	4	24.771638	I-20 EB (Basic Analysis)	NE
8542	5	24.447607	I-20 EB (Basic Analysis)	NE
8542	6	25.382634	I-20 EB (Basic Analysis)	NE
8542	7	24.228796	I-20 EB (Basic Analysis)	NE
8542	8	25.733568	I-20 EB (Basic Analysis)	NE
8542	9	25.461549	I-20 EB (Basic Analysis)	NE
8542	10	23.725412	I-20 EB (Basic Analysis)	NE
8543	1	29.160258	I-20 EB (Diverge Analysis)	NE
8543	2	28.946125	I-20 EB (Diverge Analysis)	NE
8543	3	27.828525	I-20 EB (Diverge Analysis)	NE
8543	4	29.054658	I-20 EB (Diverge Analysis)	NE
8543	5	29.456525	I-20 EB (Diverge Analysis)	NE
8543	6	33.33439	I-20 EB (Diverge Analysis)	NE
8543	7	30.245591	I-20 EB (Diverge Analysis)	NE
8543	8	31.967457	I-20 EB (Diverge Analysis)	NE
8543	9	28.168792	I-20 EB (Diverge Analysis)	NE
8543	10	28.852258	I-20 EB (Diverge Analysis)	NE
8551	1	49.860785	I-26 WB (Diverge Analysis)	NW
8551	2	42.785587	I-26 WB (Diverge Analysis)	NW
8551	3	47.308786	I-26 WB (Diverge Analysis)	NW
8551	4	49.564518	I-26 WB (Diverge Analysis)	NW
8551	5	42.166654	I-26 WB (Diverge Analysis)	NW
8551	6	42.190121	I-26 WB (Diverge Analysis)	NW
8551	7	41.603454	I-26 WB (Diverge Analysis)	NW
8551	8	52.066651	I-26 WB (Diverge Analysis)	NW
8551	9	52.753051	I-26 WB (Diverge Analysis)	NW
8551	10	57.695716	I-26 WB (Diverge Analysis)	NW
8552	1	70.112718	I-26 EB (Basic Analysis)	SE
8552	2	66.453415	I-26 EB (Basic Analysis)	SE
8552	3	52.750677	I-26 EB (Basic Analysis)	SE
8552	4	70.222053	I-26 EB (Basic Analysis)	SE
8552	5	56.497105	I-26 EB (Basic Analysis)	SE
8552	6	52.308212	I-26 EB (Basic Analysis)	SE
8552	7	53.630481	I-26 EB (Basic Analysis)	SE
8552	8	53.222183	I-26 EB (Basic Analysis)	SE
8552	9	55.346526	I-26 EB (Basic Analysis)	SE
8552	10	68.467569	I-26 EB (Basic Analysis)	SE
8553	1	129.840134	I-26 EB (Basic Analysis)	S
8553	2	122.091148	I-26 EB (Basic Analysis)	S
8553	3	119.516572	I-26 EB (Basic Analysis)	S
8553	4	124.792013	I-26 EB (Basic Analysis)	S
8553	5	114.22261	I-26 EB (Basic Analysis)	S
8553	6	126.23337	I-26 EB (Basic Analysis)	S
8553	7	121.033703	I-26 EB (Basic Analysis)	S
8553	8	126.834497	I-26 EB (Basic Analysis)	S
8553	9	119.913956	I-26 EB (Basic Analysis)	S
8553	10	132.93333	I-26 EB (Basic Analysis)	S
8554	1	81.878188	I-26 WB (Basic Analysis)	N
8554	2	80.274735	I-26 WB (Basic Analysis)	N
8554	3	81.304886	I-26 WB (Basic Analysis)	N
8554	4	83.967154	I-26 WB (Basic Analysis)	N

No Build PM

ID	Run	Density	Name (Type)	Direction
8554	5	81.362216	I-26 WB (Basic Analysis)	N
8554	6	82.607355	I-26 WB (Basic Analysis)	N
8554	7	87.670323	I-26 WB (Basic Analysis)	N
8554	8	85.360993	I-26 WB (Basic Analysis)	N
8554	9	81.851314	I-26 WB (Basic Analysis)	N
8554	10	85.086884	I-26 WB (Basic Analysis)	N
8559	1	84.233575	I-126 NB (Diverge Analysis)	W
8559	2	93.376772	I-126 NB (Diverge Analysis)	W
8559	3	90.243974	I-126 NB (Diverge Analysis)	W
8559	4	91.745839	I-126 NB (Diverge Analysis)	W
8559	5	84.154375	I-126 NB (Diverge Analysis)	W
8559	6	94.206905	I-126 NB (Diverge Analysis)	W
8559	7	93.321038	I-126 NB (Diverge Analysis)	W
8559	8	90.425839	I-126 NB (Diverge Analysis)	W
8559	9	87.627441	I-126 NB (Diverge Analysis)	W
8559	10	91.983439	I-126 NB (Diverge Analysis)	W
8560	1	14.952705	I-126 SB (Basic Analysis)	E
8560	2	14.619553	I-126 SB (Basic Analysis)	E
8560	3	14.937422	I-126 SB (Basic Analysis)	E
8560	4	14.230774	I-126 SB (Basic Analysis)	E
8560	5	14.994272	I-126 SB (Basic Analysis)	E
8560	6	15.835404	I-126 SB (Basic Analysis)	E
8560	7	15.565215	I-126 SB (Basic Analysis)	E
8560	8	15.843962	I-126 SB (Basic Analysis)	E
8560	9	15.036451	I-126 SB (Basic Analysis)	E
8560	10	14.920306	I-126 SB (Basic Analysis)	E
8658	1	121.011123	I-20 WB (Basic Analysis)	SW
8658	2	117.445928	I-20 WB (Basic Analysis)	SW
8658	3	129.034916	I-20 WB (Basic Analysis)	SW
8658	4	120.028031	I-20 WB (Basic Analysis)	SW
8658	5	127.234468	I-20 WB (Basic Analysis)	SW
8658	6	117.485693	I-20 WB (Basic Analysis)	SW
8658	7	132.029761	I-20 WB (Basic Analysis)	SW
8658	8	124.817228	I-20 WB (Basic Analysis)	SW
8658	9	116.107275	I-20 WB (Basic Analysis)	SW
8658	10	128.319148	I-20 WB (Basic Analysis)	SW
8659	1	30.113597	I-20 EB (Basic Analysis)	NE
8659	2	28.400469	I-20 EB (Basic Analysis)	NE
8659	3	29.472658	I-20 EB (Basic Analysis)	NE
8659	4	30.06529	I-20 EB (Basic Analysis)	NE
8659	5	30.326523	I-20 EB (Basic Analysis)	NE
8659	6	30.556182	I-20 EB (Basic Analysis)	NE
8659	7	28.696245	I-20 EB (Basic Analysis)	NE
8659	8	29.316674	I-20 EB (Basic Analysis)	NE
8659	9	30.162443	I-20 EB (Basic Analysis)	NE
8659	10	27.812964	I-20 EB (Basic Analysis)	NE
8763	1	17.71016	I-26 EB (Basic Analysis)	SE
8763	2	17.076546	I-26 EB (Basic Analysis)	SE
8763	3	16.328232	I-26 EB (Basic Analysis)	SE
8763	4	16.386722	I-26 EB (Basic Analysis)	SE
8763	5	16.734184	I-26 EB (Basic Analysis)	SE
8763	6	17.05289	I-26 EB (Basic Analysis)	SE
8763	7	16.669509	I-26 EB (Basic Analysis)	SE
8763	8	16.768908	I-26 EB (Basic Analysis)	SE
8763	9	16.551446	I-26 EB (Basic Analysis)	SE
8763	10	16.991254	I-26 EB (Basic Analysis)	SE
8764	1	22.674304	I-20 WB (Basic Analysis)	S

No Build PM

ID	Run	Density	Name (Type)	Direction
8764	2	21.972839	I-20 WB (Basic Analysis)	S
8764	3	22.226837	I-20 WB (Basic Analysis)	S
8764	4	21.800273	I-20 WB (Basic Analysis)	S
8764	5	22.564077	I-20 WB (Basic Analysis)	S
8764	6	21.493974	I-20 WB (Basic Analysis)	S
8764	7	21.756585	I-20 WB (Basic Analysis)	S
8764	8	21.705806	I-20 WB (Basic Analysis)	S
8764	9	22.562877	I-20 WB (Basic Analysis)	S
8764	10	21.891511	I-20 WB (Basic Analysis)	S
8765	1	19.561025	I-20 EB (Basic Analysis)	NE
8765	2	20.16503	I-20 EB (Basic Analysis)	NE
8765	3	18.956959	I-20 EB (Basic Analysis)	NE
8765	4	19.403031	I-20 EB (Basic Analysis)	NE
8765	5	18.846363	I-20 EB (Basic Analysis)	NE
8765	6	19.526886	I-20 EB (Basic Analysis)	NE
8765	7	20.497263	I-20 EB (Basic Analysis)	NE
8765	8	20.370314	I-20 EB (Basic Analysis)	NE
8765	9	20.01817	I-20 EB (Basic Analysis)	NE
8765	10	18.994295	I-20 EB (Basic Analysis)	NE
8770	1	113.035966	I-20 WB (Diverge Analysis)	SW
8770	2	115.831431	I-20 WB (Diverge Analysis)	SW
8770	3	122.586896	I-20 WB (Diverge Analysis)	SW
8770	4	114.910365	I-20 WB (Diverge Analysis)	SW
8770	5	125.353029	I-20 WB (Diverge Analysis)	SW
8770	6	110.991434	I-20 WB (Diverge Analysis)	SW
8770	7	122.792229	I-20 WB (Diverge Analysis)	SW
8770	8	116.535432	I-20 WB (Diverge Analysis)	SW
8770	9	109.955967	I-20 WB (Diverge Analysis)	SW
8770	10	124.898362	I-20 WB (Diverge Analysis)	SW
8773	1	89.608224	I-26 WB (Basic Analysis)	N
8773	2	80.788696	I-26 WB (Basic Analysis)	N
8773	3	78.241259	I-26 WB (Basic Analysis)	N
8773	4	100.211989	I-26 WB (Basic Analysis)	N
8773	5	106.495865	I-26 WB (Basic Analysis)	N
8773	6	98.311356	I-26 WB (Basic Analysis)	N
8773	7	99.781768	I-26 WB (Basic Analysis)	N
8773	8	87.499847	I-26 WB (Basic Analysis)	N
8773	9	98.302515	I-26 WB (Basic Analysis)	N
8773	10	93.519992	I-26 WB (Basic Analysis)	N
8774	1	26.776137	I-20 EB (Diverge Analysis)	NE
8774	2	24.579165	I-20 EB (Diverge Analysis)	NE
8774	3	24.865602	I-20 EB (Diverge Analysis)	NE
8774	4	25.885318	I-20 EB (Diverge Analysis)	NE
8774	5	28.766875	I-20 EB (Diverge Analysis)	NE
8774	6	27.678414	I-20 EB (Diverge Analysis)	NE
8774	7	26.638647	I-20 EB (Diverge Analysis)	NE
8774	8	27.260216	I-20 EB (Diverge Analysis)	NE
8774	9	27.174285	I-20 EB (Diverge Analysis)	NE
8774	10	25.515814	I-20 EB (Diverge Analysis)	NE
8783	1	18.739374	I-26 WB (Basic Analysis)	NW
8783	2	19.061035	I-26 WB (Basic Analysis)	NW
8783	3	19.290825	I-26 WB (Basic Analysis)	NW
8783	4	19.501113	I-26 WB (Basic Analysis)	NW
8783	5	18.935686	I-26 WB (Basic Analysis)	NW
8783	6	18.989531	I-26 WB (Basic Analysis)	NW
8783	7	19.471428	I-26 WB (Basic Analysis)	NW
8783	8	18.531252	I-26 WB (Basic Analysis)	NW

No Build PM

ID	Run	Density	Name (Type)	Direction
8783	9	19.391689	I-26 WB (Basic Analysis)	NW
8783	10	18.759958	I-26 WB (Basic Analysis)	NW
8784	1	18.538948	I-26 EB (Basic Analysis)	SE
8784	2	22.291968	I-26 EB (Basic Analysis)	SE
8784	3	21.414289	I-26 EB (Basic Analysis)	SE
8784	4	18.048956	I-26 EB (Basic Analysis)	SE
8784	5	18.657408	I-26 EB (Basic Analysis)	SE
8784	6	17.720499	I-26 EB (Basic Analysis)	SE
8784	7	20.590455	I-26 EB (Basic Analysis)	SE
8784	8	19.023556	I-26 EB (Basic Analysis)	SE
8784	9	21.398135	I-26 EB (Basic Analysis)	SE
8784	10	21.091217	I-26 EB (Basic Analysis)	SE
8817	1	19.81621	I-26 WB (Basic Analysis)	NW
8817	2	20.584483	I-26 WB (Basic Analysis)	NW
8817	3	21.433	I-26 WB (Basic Analysis)	NW
8817	4	21.114409	I-26 WB (Basic Analysis)	NW
8817	5	20.565416	I-26 WB (Basic Analysis)	NW
8817	6	20.248413	I-26 WB (Basic Analysis)	NW
8817	7	20.431146	I-26 WB (Basic Analysis)	NW
8817	8	19.967958	I-26 WB (Basic Analysis)	NW
8817	9	20.718752	I-26 WB (Basic Analysis)	NW
8817	10	20.655193	I-26 WB (Basic Analysis)	NW

RPA AM

ID	Run	Density	Name (Type)	Direction
2806	1	37.671435	I-20 EB (Basic Analysis)	NE
2806	2	42.555665	I-20 EB (Basic Analysis)	NE
2806	3	37.582901	I-20 EB (Basic Analysis)	NE
2806	4	37.923211	I-20 EB (Basic Analysis)	NE
2806	5	40.717901	I-20 EB (Basic Analysis)	NE
2806	6	37.740555	I-20 EB (Basic Analysis)	NE
2806	7	40.669128	I-20 EB (Basic Analysis)	NE
2806	8	38.393887	I-20 EB (Basic Analysis)	NE
2806	9	36.496668	I-20 EB (Basic Analysis)	NE
2806	10	38.355338	I-20 EB (Basic Analysis)	NE
2807	1	37.671435	I-20 EB (Basic Analysis)	NE
2807	2	42.555665	I-20 EB (Basic Analysis)	NE
2807	3	37.582901	I-20 EB (Basic Analysis)	NE
2807	4	37.923211	I-20 EB (Basic Analysis)	NE
2807	5	40.717901	I-20 EB (Basic Analysis)	NE
2807	6	37.740555	I-20 EB (Basic Analysis)	NE
2807	7	40.669128	I-20 EB (Basic Analysis)	NE
2807	8	38.393887	I-20 EB (Basic Analysis)	NE
2807	9	36.496668	I-20 EB (Basic Analysis)	NE
2807	10	38.355338	I-20 EB (Basic Analysis)	NE
2808	1	39.847983	I-20 EB (Diverge Analysis)	NE
2808	2	47.40616	I-20 EB (Diverge Analysis)	NE
2808	3	40.078307	I-20 EB (Diverge Analysis)	NE
2808	4	40.211756	I-20 EB (Diverge Analysis)	NE
2808	5	44.634367	I-20 EB (Diverge Analysis)	NE
2808	6	38.798181	I-20 EB (Diverge Analysis)	NE
2808	7	44.372411	I-20 EB (Diverge Analysis)	NE
2808	8	39.707614	I-20 EB (Diverge Analysis)	NE
2808	9	36.909131	I-20 EB (Diverge Analysis)	NE
2808	10	42.391429	I-20 EB (Diverge Analysis)	NE
2813	1	14.163418	I-20 WB (Merge Analysis)	S
2813	2	12.383929	I-20 WB (Merge Analysis)	S
2813	3	12.997859	I-20 WB (Merge Analysis)	S
2813	4	11.990879	I-20 WB (Merge Analysis)	S
2813	5	13.068087	I-20 WB (Merge Analysis)	S
2813	6	12.936692	I-20 WB (Merge Analysis)	S
2813	7	13.535896	I-20 WB (Merge Analysis)	S
2813	8	12.006737	I-20 WB (Merge Analysis)	S
2813	9	12.488139	I-20 WB (Merge Analysis)	S
2813	10	14.072801	I-20 WB (Merge Analysis)	S
2814	1	15.51989	I-20 WB (Basic Analysis)	S
2814	2	14.826592	I-20 WB (Basic Analysis)	S
2814	3	15.303573	I-20 WB (Basic Analysis)	S
2814	4	15.040722	I-20 WB (Basic Analysis)	S
2814	5	15.065812	I-20 WB (Basic Analysis)	S
2814	6	15.527117	I-20 WB (Basic Analysis)	S
2814	7	15.996618	I-20 WB (Basic Analysis)	S
2814	8	15.376429	I-20 WB (Basic Analysis)	S
2814	9	15.29834	I-20 WB (Basic Analysis)	S
2814	10	16.144402	I-20 WB (Basic Analysis)	S
2822	1	10.644008	I-20 WB (Merge Analysis)	SW
2822	2	11.158176	I-20 WB (Merge Analysis)	SW
2822	3	11.250775	I-20 WB (Merge Analysis)	SW
2822	4	10.046989	I-20 WB (Merge Analysis)	SW
2822	5	10.94861	I-20 WB (Merge Analysis)	SW
2822	6	9.403669	I-20 WB (Merge Analysis)	SW
2822	7	10.166393	I-20 WB (Merge Analysis)	SW
2822	8	10.636698	I-20 WB (Merge Analysis)	SW
2822	9	10.190761	I-20 WB (Merge Analysis)	SW
2822	10	10.736607	I-20 WB (Merge Analysis)	SW
2823	1	98.81845	I-20 WB (Basic Analysis)	SW
2823	2	253.683181	I-20 WB (Basic Analysis)	SW
2823	3	265.482398	I-20 WB (Basic Analysis)	SW
2823	4	103.243157	I-20 WB (Basic Analysis)	SW

RPA AM

ID	Run	Density	Name (Type)	Direction
2823	5	0	I-20 WB (Basic Analysis)	SW
2823	6	101.768256	I-20 WB (Basic Analysis)	SW
2823	7	95.868644	I-20 WB (Basic Analysis)	SW
2823	8	140.115711	I-20 WB (Basic Analysis)	SW
2823	9	76.694918	I-20 WB (Basic Analysis)	SW
2823	10	194.687097	I-20 WB (Basic Analysis)	SW
2826	1	29.468817	I-20 EB (Basic Analysis)	NE
2826	2	55.147459	I-20 EB (Basic Analysis)	NE
2826	3	29.138167	I-20 EB (Basic Analysis)	NE
2826	4	29.381372	I-20 EB (Basic Analysis)	NE
2826	5	31.613942	I-20 EB (Basic Analysis)	NE
2826	6	35.898725	I-20 EB (Basic Analysis)	NE
2826	7	34.281	I-20 EB (Basic Analysis)	NE
2826	8	35.319405	I-20 EB (Basic Analysis)	NE
2826	9	30.67118	I-20 EB (Basic Analysis)	NE
2826	10	30.993631	I-20 EB (Basic Analysis)	NE
2829	1	45.529159	I-20 EB (Merge Analysis)	NE
2829	2	77.461307	I-20 EB (Merge Analysis)	NE
2829	3	45.858918	I-20 EB (Merge Analysis)	NE
2829	4	46.46885	I-20 EB (Merge Analysis)	NE
2829	5	49.382141	I-20 EB (Merge Analysis)	NE
2829	6	67.035444	I-20 EB (Merge Analysis)	NE
2829	7	62.803114	I-20 EB (Merge Analysis)	NE
2829	8	61.932846	I-20 EB (Merge Analysis)	NE
2829	9	47.014317	I-20 EB (Merge Analysis)	NE
2829	10	46.225869	I-20 EB (Merge Analysis)	NE
2830	1	43.993854	I-20 EB (Basic Analysis)	NE
2830	2	52.168654	I-20 EB (Basic Analysis)	NE
2830	3	45.994771	I-20 EB (Basic Analysis)	NE
2830	4	44.915329	I-20 EB (Basic Analysis)	NE
2830	5	47.298	I-20 EB (Basic Analysis)	NE
2830	6	47.837721	I-20 EB (Basic Analysis)	NE
2830	7	51.365654	I-20 EB (Basic Analysis)	NE
2830	8	46.652967	I-20 EB (Basic Analysis)	NE
2830	9	42.585313	I-20 EB (Basic Analysis)	NE
2830	10	47.311164	I-20 EB (Basic Analysis)	NE
2831	1	14.771339	I-20 WB (Basic Analysis)	SW
2831	2	14.027394	I-20 WB (Basic Analysis)	SW
2831	3	15.033512	I-20 WB (Basic Analysis)	SW
2831	4	14.616724	I-20 WB (Basic Analysis)	SW
2831	5	13.489602	I-20 WB (Basic Analysis)	SW
2831	6	15.584748	I-20 WB (Basic Analysis)	SW
2831	7	16.745481	I-20 WB (Basic Analysis)	SW
2831	8	15.098495	I-20 WB (Basic Analysis)	SW
2831	9	16.707388	I-20 WB (Basic Analysis)	SW
2831	10	14.524851	I-20 WB (Basic Analysis)	SW
2837	1	12.784213	I-20 WB (Merge Analysis)	SW
2837	2	12.528107	I-20 WB (Merge Analysis)	SW
2837	3	12.886656	I-20 WB (Merge Analysis)	SW
2837	4	12.351846	I-20 WB (Merge Analysis)	SW
2837	5	12.639588	I-20 WB (Merge Analysis)	SW
2837	6	13.094553	I-20 WB (Merge Analysis)	SW
2837	7	12.482912	I-20 WB (Merge Analysis)	SW
2837	8	13.183437	I-20 WB (Merge Analysis)	SW
2837	9	12.65616	I-20 WB (Merge Analysis)	SW
2837	10	13.391335	I-20 WB (Merge Analysis)	SW
2838	1	30.091117	I-20 WB (Diverge Analysis)	SW
2838	2	40.200419	I-20 WB (Diverge Analysis)	SW
2838	3	44.13439	I-20 WB (Diverge Analysis)	SW
2838	4	41.632434	I-20 WB (Diverge Analysis)	SW
2838	5	40.754182	I-20 WB (Diverge Analysis)	SW
2838	6	46.345682	I-20 WB (Diverge Analysis)	SW
2838	7	34.150373	I-20 WB (Diverge Analysis)	SW
2838	8	55.366252	I-20 WB (Diverge Analysis)	SW

RPA AM

ID	Run	Density	Name (Type)	Direction
2838	9	43.505455	I-20 WB (Diverge Analysis)	SW
2838	10	48.727363	I-20 WB (Diverge Analysis)	SW
2839	1	30.091117	I-20 WB (Diverge Analysis)	SW
2839	2	40.200419	I-20 WB (Diverge Analysis)	SW
2839	3	44.13439	I-20 WB (Diverge Analysis)	SW
2839	4	41.632434	I-20 WB (Diverge Analysis)	SW
2839	5	40.754182	I-20 WB (Diverge Analysis)	SW
2839	6	46.345682	I-20 WB (Diverge Analysis)	SW
2839	7	34.150373	I-20 WB (Diverge Analysis)	SW
2839	8	55.366252	I-20 WB (Diverge Analysis)	SW
2839	9	43.505455	I-20 WB (Diverge Analysis)	SW
2839	10	48.727363	I-20 WB (Diverge Analysis)	SW
2840	1	30.091117	I-20 WB (Diverge Analysis)	SW
2840	2	40.200419	I-20 WB (Diverge Analysis)	SW
2840	3	44.13439	I-20 WB (Diverge Analysis)	SW
2840	4	41.632434	I-20 WB (Diverge Analysis)	SW
2840	5	40.754182	I-20 WB (Diverge Analysis)	SW
2840	6	46.345682	I-20 WB (Diverge Analysis)	SW
2840	7	34.150373	I-20 WB (Diverge Analysis)	SW
2840	8	55.366252	I-20 WB (Diverge Analysis)	SW
2840	9	43.505455	I-20 WB (Diverge Analysis)	SW
2840	10	48.727363	I-20 WB (Diverge Analysis)	SW
2843	1	31.130778	I-20 EB (Basic Analysis)	NE
2843	2	33.559032	I-20 EB (Basic Analysis)	NE
2843	3	30.760785	I-20 EB (Basic Analysis)	NE
2843	4	28.675294	I-20 EB (Basic Analysis)	NE
2843	5	31.156604	I-20 EB (Basic Analysis)	NE
2843	6	33.929025	I-20 EB (Basic Analysis)	NE
2843	7	31.77251	I-20 EB (Basic Analysis)	NE
2843	8	31.565056	I-20 EB (Basic Analysis)	NE
2843	9	29.561536	I-20 EB (Basic Analysis)	NE
2843	10	29.618242	I-20 EB (Basic Analysis)	NE
2848	1	17.96126	I-20 EB (Basic Analysis)	NE
2848	2	18.825502	I-20 EB (Basic Analysis)	NE
2848	3	18.367962	I-20 EB (Basic Analysis)	NE
2848	4	18.621445	I-20 EB (Basic Analysis)	NE
2848	5	18.949066	I-20 EB (Basic Analysis)	NE
2848	6	18.679344	I-20 EB (Basic Analysis)	NE
2848	7	19.187015	I-20 EB (Basic Analysis)	NE
2848	8	18.442101	I-20 EB (Basic Analysis)	NE
2848	9	18.525418	I-20 EB (Basic Analysis)	NE
2848	10	18.592496	I-20 EB (Basic Analysis)	NE
2852	1	10.78486	I-20 WB (Merge Analysis)	SW
2852	2	10.39179	I-20 WB (Merge Analysis)	SW
2852	3	11.486771	I-20 WB (Merge Analysis)	SW
2852	4	11.462205	I-20 WB (Merge Analysis)	SW
2852	5	9.984682	I-20 WB (Merge Analysis)	SW
2852	6	11.511338	I-20 WB (Merge Analysis)	SW
2852	7	12.729154	I-20 WB (Merge Analysis)	SW
2852	8	11.676287	I-20 WB (Merge Analysis)	SW
2852	9	12.290459	I-20 WB (Merge Analysis)	SW
2852	10	11.476243	I-20 WB (Merge Analysis)	SW
2863	1	19.975697	I-20 EB (Basic Analysis)	NE
2863	2	22.421621	I-20 EB (Basic Analysis)	NE
2863	3	20.226964	I-20 EB (Basic Analysis)	NE
2863	4	20.811944	I-20 EB (Basic Analysis)	NE
2863	5	23.469873	I-20 EB (Basic Analysis)	NE
2863	6	20.215185	I-20 EB (Basic Analysis)	NE
2863	7	21.302699	I-20 EB (Basic Analysis)	NE
2863	8	21.051432	I-20 EB (Basic Analysis)	NE
2863	9	19.225823	I-20 EB (Basic Analysis)	NE
2863	10	20.643124	I-20 EB (Basic Analysis)	NE
4563	1	46.453022	I-126 SB (Merge Analysis)	E
4563	2	46.735131	I-126 SB (Merge Analysis)	E

RPA AM

ID	Run	Density	Name (Type)	Direction
4563	3	44.61011	I-126 SB (Merge Analysis)	E
4563	4	46.223041	I-126 SB (Merge Analysis)	E
4563	5	40.41833	I-126 SB (Merge Analysis)	E
4563	6	40.314072	I-126 SB (Merge Analysis)	E
4563	7	43.230227	I-126 SB (Merge Analysis)	E
4563	8	41.221729	I-126 SB (Merge Analysis)	E
4563	9	43.607395	I-126 SB (Merge Analysis)	E
4563	10	44.794094	I-126 SB (Merge Analysis)	E
4566	1	15.272677	I-126 NB (Basic Analysis)	W
4566	2	15.744056	I-126 NB (Basic Analysis)	W
4566	3	15.580135	I-126 NB (Basic Analysis)	W
4566	4	14.970315	I-126 NB (Basic Analysis)	W
4566	5	14.870094	I-126 NB (Basic Analysis)	W
4566	6	14.777517	I-126 NB (Basic Analysis)	W
4566	7	15.152922	I-126 NB (Basic Analysis)	W
4566	8	15.495202	I-126 NB (Basic Analysis)	W
4566	9	15.949595	I-126 NB (Basic Analysis)	W
4566	10	15.915621	I-126 NB (Basic Analysis)	W
4570	1	12.842359	I-126 NB (Basic Analysis)	W
4570	2	12.975477	I-126 NB (Basic Analysis)	W
4570	3	13.60779	I-126 NB (Basic Analysis)	W
4570	4	12.772234	I-126 NB (Basic Analysis)	W
4570	5	13.039659	I-126 NB (Basic Analysis)	W
4570	6	13.881158	I-126 NB (Basic Analysis)	W
4570	7	13.354627	I-126 NB (Basic Analysis)	W
4570	8	13.859764	I-126 NB (Basic Analysis)	W
4570	9	13.758736	I-126 NB (Basic Analysis)	W
4570	10	13.491311	I-126 NB (Basic Analysis)	W
4573	1	52.104154	I-126 SB (Basic Analysis)	E
4573	2	52.703866	I-126 SB (Basic Analysis)	E
4573	3	50.048376	I-126 SB (Basic Analysis)	E
4573	4	53.096689	I-126 SB (Basic Analysis)	E
4573	5	47.350986	I-126 SB (Basic Analysis)	E
4573	6	47.762141	I-126 SB (Basic Analysis)	E
4573	7	52.261284	I-126 SB (Basic Analysis)	E
4573	8	48.484937	I-126 SB (Basic Analysis)	E
4573	9	52.368656	I-126 SB (Basic Analysis)	E
4573	10	52.041302	I-126 SB (Basic Analysis)	E
4579	1	34.613279	I-126 SB (Diverge Analysis)	E
4579	2	37.599272	I-126 SB (Diverge Analysis)	E
4579	3	33.413065	I-126 SB (Diverge Analysis)	E
4579	4	34.898306	I-126 SB (Diverge Analysis)	E
4579	5	32.478488	I-126 SB (Diverge Analysis)	E
4579	6	31.755257	I-126 SB (Diverge Analysis)	E
4579	7	34.217732	I-126 SB (Diverge Analysis)	E
4579	8	33.346171	I-126 SB (Diverge Analysis)	E
4579	9	34.176044	I-126 SB (Diverge Analysis)	E
4579	10	32.009261	I-126 SB (Diverge Analysis)	E
4589	1	12.213396	I-126 NB (Merge Analysis)	NW
4589	2	11.214589	I-126 NB (Merge Analysis)	NW
4589	3	13.062124	I-126 NB (Merge Analysis)	NW
4589	4	12.218571	I-126 NB (Merge Analysis)	NW
4589	5	11.9417	I-126 NB (Merge Analysis)	NW
4589	6	10.797988	I-126 NB (Merge Analysis)	NW
4589	7	11.654478	I-126 NB (Merge Analysis)	NW
4589	8	12.151294	I-126 NB (Merge Analysis)	NW
4589	9	12.195283	I-126 NB (Merge Analysis)	NW
4589	10	12.081429	I-126 NB (Merge Analysis)	NW
4599	1	9.801944	I-126 NB (Basic Analysis)	NW
4599	2	9.716561	I-126 NB (Basic Analysis)	NW
4599	3	11.754881	I-126 NB (Basic Analysis)	NW
4599	4	10.59678	I-126 NB (Basic Analysis)	NW
4599	5	10.795489	I-126 NB (Basic Analysis)	NW
4599	6	9.610997	I-126 NB (Basic Analysis)	NW

RPA AM

ID	Run	Density	Name (Type)	Direction
4599	7	10.710106	I-126 NB (Basic Analysis)	NW
4599	8	10.573494	I-126 NB (Basic Analysis)	NW
4599	9	10.041015	I-126 NB (Basic Analysis)	NW
4599	10	10.306478	I-126 NB (Basic Analysis)	NW
4601	1	11.509104	I-126 NB (Basic Analysis)	NW
4601	2	11.972947	I-126 NB (Basic Analysis)	NW
4601	3	10.747076	I-126 NB (Basic Analysis)	NW
4601	4	10.912734	I-126 NB (Basic Analysis)	NW
4601	5	11.343446	I-126 NB (Basic Analysis)	NW
4601	6	11.695469	I-126 NB (Basic Analysis)	NW
4601	7	9.678581	I-126 NB (Basic Analysis)	NW
4601	8	11.64163	I-126 NB (Basic Analysis)	NW
4601	9	11.745167	I-126 NB (Basic Analysis)	NW
4601	10	11.15708	I-126 NB (Basic Analysis)	NW
4604	1	15.648117	I-26 WB (Basic Analysis)	NW
4604	2	16.084022	I-26 WB (Basic Analysis)	NW
4604	3	15.747773	I-26 WB (Basic Analysis)	NW
4604	4	15.186402	I-26 WB (Basic Analysis)	NW
4604	5	15.5205	I-26 WB (Basic Analysis)	NW
4604	6	15.161309	I-26 WB (Basic Analysis)	NW
4604	7	15.345565	I-26 WB (Basic Analysis)	NW
4604	8	14.508886	I-26 WB (Basic Analysis)	NW
4604	9	15.186402	I-26 WB (Basic Analysis)	NW
4604	10	15.768564	I-26 WB (Basic Analysis)	NW
4610	1	14.854131	I-26 EB (Basic Analysis)	SE
4610	2	15.45747	I-26 EB (Basic Analysis)	SE
4610	3	14.507531	I-26 EB (Basic Analysis)	SE
4610	4	14.84215	I-26 EB (Basic Analysis)	SE
4610	5	14.784811	I-26 EB (Basic Analysis)	SE
4610	6	13.690242	I-26 EB (Basic Analysis)	SE
4610	7	14.130979	I-26 EB (Basic Analysis)	SE
4610	8	13.975223	I-26 EB (Basic Analysis)	SE
4610	9	14.260205	I-26 EB (Basic Analysis)	SE
4610	10	14.433933	I-26 EB (Basic Analysis)	SE
4646	1	24.101639	I-26 WB (Basic Analysis)	NW
4646	2	24.430328	I-26 WB (Basic Analysis)	NW
4646	3	22.431361	I-26 WB (Basic Analysis)	NW
4646	4	19.770544	I-26 WB (Basic Analysis)	NW
4646	5	24.374429	I-26 WB (Basic Analysis)	NW
4646	6	23.289978	I-26 WB (Basic Analysis)	NW
4646	7	22.147392	I-26 WB (Basic Analysis)	NW
4646	8	22.652723	I-26 WB (Basic Analysis)	NW
4646	9	23.155819	I-26 WB (Basic Analysis)	NW
4646	10	22.236831	I-26 WB (Basic Analysis)	NW
4651	1	20.987681	I-26 WB (Basic Analysis)	NW
4651	2	21.963916	I-26 WB (Basic Analysis)	NW
4651	3	22.319778	I-26 WB (Basic Analysis)	NW
4651	4	21.444439	I-26 WB (Basic Analysis)	NW
4651	5	23.379184	I-26 WB (Basic Analysis)	NW
4651	6	21.959826	I-26 WB (Basic Analysis)	NW
4651	7	20.669996	I-26 WB (Basic Analysis)	NW
4651	8	20.226873	I-26 WB (Basic Analysis)	NW
4651	9	23.270107	I-26 WB (Basic Analysis)	NW
4651	10	21.89847	I-26 WB (Basic Analysis)	NW
4654	1	28.062819	I-26 WB (Merge Analysis)	NW
4654	2	27.173657	I-26 WB (Merge Analysis)	NW
4654	3	26.202085	I-26 WB (Merge Analysis)	NW
4654	4	24.577738	I-26 WB (Merge Analysis)	NW
4654	5	25.215332	I-26 WB (Merge Analysis)	NW
4654	6	25.8963	I-26 WB (Merge Analysis)	NW
4654	7	24.994126	I-26 WB (Merge Analysis)	NW
4654	8	25.8963	I-26 WB (Merge Analysis)	NW
4654	9	24.278459	I-26 WB (Merge Analysis)	NW
4654	10	26.343049	I-26 WB (Merge Analysis)	NW

RPA AM

ID	Run	Density	Name (Type)	Direction
4677	1	28.293626	I-26 WB (Basic Analysis)	NW
4677	2	27.787719	I-26 WB (Basic Analysis)	NW
4677	3	27.835412	I-26 WB (Basic Analysis)	NW
4677	4	26.653659	I-26 WB (Basic Analysis)	NW
4677	5	27.683122	I-26 WB (Basic Analysis)	NW
4677	6	27.287443	I-26 WB (Basic Analysis)	NW
4677	7	26.633129	I-26 WB (Basic Analysis)	NW
4677	8	27.417191	I-26 WB (Basic Analysis)	NW
4677	9	27.412658	I-26 WB (Basic Analysis)	NW
4677	10	27.653471	I-26 WB (Basic Analysis)	NW
4687	1	41.406467	I-26 EB (Basic Analysis)	SE
4687	2	40.850799	I-26 EB (Basic Analysis)	SE
4687	3	40.220612	I-26 EB (Basic Analysis)	SE
4687	4	39.093636	I-26 EB (Basic Analysis)	SE
4687	5	40.615283	I-26 EB (Basic Analysis)	SE
4687	6	40.807559	I-26 EB (Basic Analysis)	SE
4687	7	39.886659	I-26 EB (Basic Analysis)	SE
4687	8	39.38067	I-26 EB (Basic Analysis)	SE
4687	9	42.830596	I-26 EB (Basic Analysis)	SE
4687	10	40.445087	I-26 EB (Basic Analysis)	SE
4701	1	21.237826	I-26 WB (Weaving Analysis)	NW
4701	2	22.124691	I-26 WB (Weaving Analysis)	NW
4701	3	21.812612	I-26 WB (Weaving Analysis)	NW
4701	4	20.503953	I-26 WB (Weaving Analysis)	NW
4701	5	21.648039	I-26 WB (Weaving Analysis)	NW
4701	6	21.075691	I-26 WB (Weaving Analysis)	NW
4701	7	21.338398	I-26 WB (Weaving Analysis)	NW
4701	8	21.464571	I-26 WB (Weaving Analysis)	NW
4701	9	21.654134	I-26 WB (Weaving Analysis)	NW
4701	10	21.293903	I-26 WB (Weaving Analysis)	NW
4712	1	21.806338	I-26 WB (Basic Analysis)	NW
4712	2	21.710021	I-26 WB (Basic Analysis)	NW
4712	3	22.214268	I-26 WB (Basic Analysis)	NW
4712	4	20.747796	I-26 WB (Basic Analysis)	NW
4712	5	21.544771	I-26 WB (Basic Analysis)	NW
4712	6	21.294536	I-26 WB (Basic Analysis)	NW
4712	7	20.535332	I-26 WB (Basic Analysis)	NW
4712	8	20.331367	I-26 WB (Basic Analysis)	NW
4712	9	20.930042	I-26 WB (Basic Analysis)	NW
4712	10	22.186884	I-26 WB (Basic Analysis)	NW
4714	1	34.362478	I-26 EB (Basic Analysis)	SE
4714	2	34.58529	I-26 EB (Basic Analysis)	SE
4714	3	33.628992	I-26 EB (Basic Analysis)	SE
4714	4	34.157558	I-26 EB (Basic Analysis)	SE
4714	5	34.366545	I-26 EB (Basic Analysis)	SE
4714	6	35.835145	I-26 EB (Basic Analysis)	SE
4714	7	34.503972	I-26 EB (Basic Analysis)	SE
4714	8	34.285227	I-26 EB (Basic Analysis)	SE
4714	9	35.127679	I-26 EB (Basic Analysis)	SE
4714	10	34.167316	I-26 EB (Basic Analysis)	SE
4720	1	28.313759	I-26 EB (Merge Analysis)	SE
4720	2	27.29118	I-26 EB (Merge Analysis)	SE
4720	3	28.33145	I-26 EB (Merge Analysis)	SE
4720	4	28.660516	I-26 EB (Merge Analysis)	SE
4720	5	28.99135	I-26 EB (Merge Analysis)	SE
4720	6	27.278796	I-26 EB (Merge Analysis)	SE
4720	7	28.556135	I-26 EB (Merge Analysis)	SE
4720	8	25.891768	I-26 EB (Merge Analysis)	SE
4720	9	27.466327	I-26 EB (Merge Analysis)	SE
4720	10	27.1638	I-26 EB (Merge Analysis)	SE
4725	1	19.739428	I-26 WB (Merge Analysis)	NW
4725	2	20.815677	I-26 WB (Merge Analysis)	NW
4725	3	21.561823	I-26 WB (Merge Analysis)	NW
4725	4	19.448881	I-26 WB (Merge Analysis)	NW

RPA AM

ID	Run	Density	Name (Type)	Direction
4725	5	19.184252	I-26 WB (Merge Analysis)	NW
4725	6	20.459656	I-26 WB (Merge Analysis)	NW
4725	7	20.190934	I-26 WB (Merge Analysis)	NW
4725	8	21.178519	I-26 WB (Merge Analysis)	NW
4725	9	21.767797	I-26 WB (Merge Analysis)	NW
4725	10	20.345074	I-26 WB (Merge Analysis)	NW
4727	1	23.126665	I-26 WB (Basic Analysis)	NW
4727	2	24.614065	I-26 WB (Basic Analysis)	NW
4727	3	23.829438	I-26 WB (Basic Analysis)	NW
4727	4	20.41676	I-26 WB (Basic Analysis)	NW
4727	5	22.840241	I-26 WB (Basic Analysis)	NW
4727	6	25.042357	I-26 WB (Basic Analysis)	NW
4727	7	20.993183	I-26 WB (Basic Analysis)	NW
4727	8	21.458962	I-26 WB (Basic Analysis)	NW
4727	9	22.660038	I-26 WB (Basic Analysis)	NW
4727	10	21.226932	I-26 WB (Basic Analysis)	NW
4728	1	20.601878	I-26 WB (Diverge Analysis)	NW
4728	2	20.573405	I-26 WB (Diverge Analysis)	NW
4728	3	21.469026	I-26 WB (Diverge Analysis)	NW
4728	4	19.928868	I-26 WB (Diverge Analysis)	NW
4728	5	20.128183	I-26 WB (Diverge Analysis)	NW
4728	6	20.182541	I-26 WB (Diverge Analysis)	NW
4728	7	20.006523	I-26 WB (Diverge Analysis)	NW
4728	8	19.607894	I-26 WB (Diverge Analysis)	NW
4728	9	19.962519	I-26 WB (Diverge Analysis)	NW
4728	10	21.595863	I-26 WB (Diverge Analysis)	NW
4729	1	20.601878	I-26 WB (Diverge Analysis)	NW
4729	2	20.573405	I-26 WB (Diverge Analysis)	NW
4729	3	21.469026	I-26 WB (Diverge Analysis)	NW
4729	4	19.928868	I-26 WB (Diverge Analysis)	NW
4729	5	20.128183	I-26 WB (Diverge Analysis)	NW
4729	6	20.182541	I-26 WB (Diverge Analysis)	NW
4729	7	20.006523	I-26 WB (Diverge Analysis)	NW
4729	8	19.607894	I-26 WB (Diverge Analysis)	NW
4729	9	19.962519	I-26 WB (Diverge Analysis)	NW
4729	10	21.595863	I-26 WB (Diverge Analysis)	NW
4730	1	20.601878	I-26 WB (Diverge Analysis)	NW
4730	2	20.573405	I-26 WB (Diverge Analysis)	NW
4730	3	21.469026	I-26 WB (Diverge Analysis)	NW
4730	4	19.928868	I-26 WB (Diverge Analysis)	NW
4730	5	20.128183	I-26 WB (Diverge Analysis)	NW
4730	6	20.182541	I-26 WB (Diverge Analysis)	NW
4730	7	20.006523	I-26 WB (Diverge Analysis)	NW
4730	8	19.607894	I-26 WB (Diverge Analysis)	NW
4730	9	19.962519	I-26 WB (Diverge Analysis)	NW
4730	10	21.595863	I-26 WB (Diverge Analysis)	NW
4732	1	18.241613	I-26 WB (Basic Analysis)	NW
4732	2	18.428538	I-26 WB (Basic Analysis)	NW
4732	3	18.067884	I-26 WB (Basic Analysis)	NW
4732	4	18.309786	I-26 WB (Basic Analysis)	NW
4732	5	17.705031	I-26 WB (Basic Analysis)	NW
4732	6	17.23882	I-26 WB (Basic Analysis)	NW
4732	7	18.246012	I-26 WB (Basic Analysis)	NW
4732	8	19.314779	I-26 WB (Basic Analysis)	NW
4732	9	19.466517	I-26 WB (Basic Analysis)	NW
4732	10	19.624853	I-26 WB (Basic Analysis)	NW
4733	1	30.991764	I-26 EB (Basic Analysis)	SE
4733	2	33.619791	I-26 EB (Basic Analysis)	SE
4733	3	32.294754	I-26 EB (Basic Analysis)	SE
4733	4	30.482473	I-26 EB (Basic Analysis)	SE
4733	5	32.144833	I-26 EB (Basic Analysis)	SE
4733	6	31.240897	I-26 EB (Basic Analysis)	SE
4733	7	32.138219	I-26 EB (Basic Analysis)	SE
4733	8	31.366566	I-26 EB (Basic Analysis)	SE

RPA AM

ID	Run	Density	Name (Type)	Direction
4733	9	31.313653	I-26 EB (Basic Analysis)	SE
4733	10	33.203099	I-26 EB (Basic Analysis)	SE
4736	1	38.295875	I-26 EB (Basic Analysis)	SE
4736	2	38.461658	I-26 EB (Basic Analysis)	SE
4736	3	38.984512	I-26 EB (Basic Analysis)	SE
4736	4	41.751813	I-26 EB (Basic Analysis)	SE
4736	5	37.683753	I-26 EB (Basic Analysis)	SE
4736	6	40.336281	I-26 EB (Basic Analysis)	SE
4736	7	36.127944	I-26 EB (Basic Analysis)	SE
4736	8	37.645496	I-26 EB (Basic Analysis)	SE
4736	9	41.981359	I-26 EB (Basic Analysis)	SE
4736	10	37.811279	I-26 EB (Basic Analysis)	SE
4737	1	29.401439	I-26 EB (Diverge Analysis)	SE
4737	2	30.671109	I-26 EB (Diverge Analysis)	SE
4737	3	29.643935	I-26 EB (Diverge Analysis)	SE
4737	4	30.069445	I-26 EB (Diverge Analysis)	SE
4737	5	29.717141	I-26 EB (Diverge Analysis)	SE
4737	6	29.518111	I-26 EB (Diverge Analysis)	SE
4737	7	29.12234	I-26 EB (Diverge Analysis)	SE
4737	8	29.785772	I-26 EB (Diverge Analysis)	SE
4737	9	29.433467	I-26 EB (Diverge Analysis)	SE
4737	10	28.273606	I-26 EB (Diverge Analysis)	SE
4739	1	17.584096	I-26 WB (Weaving Analysis)	NW
4739	2	19.1649	I-26 WB (Weaving Analysis)	NW
4739	3	17.501959	I-26 WB (Weaving Analysis)	NW
4739	4	16.256435	I-26 WB (Weaving Analysis)	NW
4739	5	16.850247	I-26 WB (Weaving Analysis)	NW
4739	6	17.192261	I-26 WB (Weaving Analysis)	NW
4739	7	17.291903	I-26 WB (Weaving Analysis)	NW
4739	8	18.887519	I-26 WB (Weaving Analysis)	NW
4739	9	18.940033	I-26 WB (Weaving Analysis)	NW
4739	10	16.622686	I-26 WB (Weaving Analysis)	NW
4741	1	26.300831	I-26 WB (Basic Analysis)	NW
4741	2	19.798494	I-26 WB (Basic Analysis)	NW
4741	3	22.780601	I-26 WB (Basic Analysis)	NW
4741	4	20.269353	I-26 WB (Basic Analysis)	NW
4741	5	24.798567	I-26 WB (Basic Analysis)	NW
4741	6	24.35013	I-26 WB (Basic Analysis)	NW
4741	7	23.699896	I-26 WB (Basic Analysis)	NW
4741	8	18.946464	I-26 WB (Basic Analysis)	NW
4741	9	19.01373	I-26 WB (Basic Analysis)	NW
4741	10	21.569821	I-26 WB (Basic Analysis)	NW
4742	1	15.584002	I-26 WB (Diverge Analysis)	NW
4742	2	14.910061	I-26 WB (Diverge Analysis)	NW
4742	3	17.527239	I-26 WB (Diverge Analysis)	NW
4742	4	14.376623	I-26 WB (Diverge Analysis)	NW
4742	5	15.322046	I-26 WB (Diverge Analysis)	NW
4742	6	16.75566	I-26 WB (Diverge Analysis)	NW
4742	7	16.36987	I-26 WB (Diverge Analysis)	NW
4742	8	15.207738	I-26 WB (Diverge Analysis)	NW
4742	9	14.852907	I-26 WB (Diverge Analysis)	NW
4742	10	16.13411	I-26 WB (Diverge Analysis)	NW
4745	1	29.283843	I-26 EB (Basic Analysis)	SE
4745	2	31.441671	I-26 EB (Basic Analysis)	SE
4745	3	29.108153	I-26 EB (Basic Analysis)	SE
4745	4	30.038407	I-26 EB (Basic Analysis)	SE
4745	5	31.281748	I-26 EB (Basic Analysis)	SE
4745	6	30.069941	I-26 EB (Basic Analysis)	SE
4745	7	30.045164	I-26 EB (Basic Analysis)	SE
4745	8	30.121747	I-26 EB (Basic Analysis)	SE
4745	9	29.822173	I-26 EB (Basic Analysis)	SE
4745	10	31.995768	I-26 EB (Basic Analysis)	SE
4753	1	16.305311	I-26 WB (Basic Analysis)	NW
4753	2	17.734282	I-26 WB (Basic Analysis)	NW

RPA AM

ID	Run	Density	Name (Type)	Direction
4753	3	18.080243	I-26 WB (Basic Analysis)	NW
4753	4	15.802485	I-26 WB (Basic Analysis)	NW
4753	5	19.300778	I-26 WB (Basic Analysis)	NW
4753	6	16.610444	I-26 WB (Basic Analysis)	NW
4753	7	14.728071	I-26 WB (Basic Analysis)	NW
4753	8	16.700695	I-26 WB (Basic Analysis)	NW
4753	9	16.047452	I-26 WB (Basic Analysis)	NW
4753	10	17.156247	I-26 WB (Basic Analysis)	NW
4755	1	28.273583	I-26 EB (Basic Analysis)	SE
4755	2	32.803604	I-26 EB (Basic Analysis)	SE
4755	3	30.935361	I-26 EB (Basic Analysis)	SE
4755	4	29.285808	I-26 EB (Basic Analysis)	SE
4755	5	32.053807	I-26 EB (Basic Analysis)	SE
4755	6	30.897871	I-26 EB (Basic Analysis)	SE
4755	7	29.6857	I-26 EB (Basic Analysis)	SE
4755	8	30.354268	I-26 EB (Basic Analysis)	SE
4755	9	31.778882	I-26 EB (Basic Analysis)	SE
4755	10	30.304282	I-26 EB (Basic Analysis)	SE
4756	1	21.798925	I-26 EB (Diverge Analysis)	SE
4756	2	24.609675	I-26 EB (Diverge Analysis)	SE
4756	3	24.615921	I-26 EB (Diverge Analysis)	SE
4756	4	22.167446	I-26 EB (Diverge Analysis)	SE
4756	5	23.895536	I-26 EB (Diverge Analysis)	SE
4756	6	23.129347	I-26 EB (Diverge Analysis)	SE
4756	7	23.608215	I-26 EB (Diverge Analysis)	SE
4756	8	22.854518	I-26 EB (Diverge Analysis)	SE
4756	9	23.152249	I-26 EB (Diverge Analysis)	SE
4756	10	24.085002	I-26 EB (Diverge Analysis)	SE
4760	1	9.366162	I-26 WB (Merge Analysis)	NW
4760	2	9.533415	I-26 WB (Merge Analysis)	NW
4760	3	9.301037	I-26 WB (Merge Analysis)	NW
4760	4	8.908807	I-26 WB (Merge Analysis)	NW
4760	5	9.579299	I-26 WB (Merge Analysis)	NW
4760	6	9.039057	I-26 WB (Merge Analysis)	NW
4760	7	9.517134	I-26 WB (Merge Analysis)	NW
4760	8	10.680504	I-26 WB (Merge Analysis)	NW
4760	9	10.280873	I-26 WB (Merge Analysis)	NW
4760	10	9.07902	I-26 WB (Merge Analysis)	NW
4761	1	16.585013	I-26 WB (Basic Analysis)	NW
4761	2	16.827869	I-26 WB (Basic Analysis)	NW
4761	3	16.868233	I-26 WB (Basic Analysis)	NW
4761	4	15.819777	I-26 WB (Basic Analysis)	NW
4761	5	17.015939	I-26 WB (Basic Analysis)	NW
4761	6	16.554567	I-26 WB (Basic Analysis)	NW
4761	7	16.119247	I-26 WB (Basic Analysis)	NW
4761	8	16.48356	I-26 WB (Basic Analysis)	NW
4761	9	17.036563	I-26 WB (Basic Analysis)	NW
4761	10	16.546768	I-26 WB (Basic Analysis)	NW
4762	1	16.585013	I-26 WB (Basic Analysis)	NW
4762	2	16.827869	I-26 WB (Basic Analysis)	NW
4762	3	16.868233	I-26 WB (Basic Analysis)	NW
4762	4	15.819777	I-26 WB (Basic Analysis)	NW
4762	5	17.015939	I-26 WB (Basic Analysis)	NW
4762	6	16.554567	I-26 WB (Basic Analysis)	NW
4762	7	16.119247	I-26 WB (Basic Analysis)	NW
4762	8	16.48356	I-26 WB (Basic Analysis)	NW
4762	9	17.036563	I-26 WB (Basic Analysis)	NW
4762	10	16.546768	I-26 WB (Basic Analysis)	NW
4763	1	16.585013	I-26 WB (Basic Analysis)	NW
4763	2	16.827869	I-26 WB (Basic Analysis)	NW
4763	3	16.868233	I-26 WB (Basic Analysis)	NW
4763	4	15.819777	I-26 WB (Basic Analysis)	NW
4763	5	17.015939	I-26 WB (Basic Analysis)	NW
4763	6	16.554567	I-26 WB (Basic Analysis)	NW

RPA AM

ID	Run	Density	Name (Type)	Direction
4763	7	16.119247	I-26 WB (Basic Analysis)	NW
4763	8	16.48356	I-26 WB (Basic Analysis)	NW
4763	9	17.036563	I-26 WB (Basic Analysis)	NW
4763	10	16.546768	I-26 WB (Basic Analysis)	NW
4764	1	16.585013	I-26 WB (Basic Analysis)	NW
4764	2	16.827869	I-26 WB (Basic Analysis)	NW
4764	3	16.868233	I-26 WB (Basic Analysis)	NW
4764	4	15.819777	I-26 WB (Basic Analysis)	NW
4764	5	17.015939	I-26 WB (Basic Analysis)	NW
4764	6	16.554567	I-26 WB (Basic Analysis)	NW
4764	7	16.119247	I-26 WB (Basic Analysis)	NW
4764	8	16.48356	I-26 WB (Basic Analysis)	NW
4764	9	17.036563	I-26 WB (Basic Analysis)	NW
4764	10	16.546768	I-26 WB (Basic Analysis)	NW
4769	1	28.042624	I-26 EB (Basic Analysis)	SE
4769	2	29.000495	I-26 EB (Basic Analysis)	SE
4769	3	28.376622	I-26 EB (Basic Analysis)	SE
4769	4	28.256211	I-26 EB (Basic Analysis)	SE
4769	5	28.517794	I-26 EB (Basic Analysis)	SE
4769	6	28.484506	I-26 EB (Basic Analysis)	SE
4769	7	28.48519	I-26 EB (Basic Analysis)	SE
4769	8	27.785845	I-26 EB (Basic Analysis)	SE
4769	9	28.264737	I-26 EB (Basic Analysis)	SE
4769	10	28.33844	I-26 EB (Basic Analysis)	SE
6079	1	10.092827	CD ROAD I-20 WB TO I-20 (Basic Analysis)	NW
6079	2	12.128301	CD ROAD I-20 WB TO I-20 (Basic Analysis)	NW
6079	3	10.856943	CD ROAD I-20 WB TO I-20 (Basic Analysis)	NW
6079	4	11.295902	CD ROAD I-20 WB TO I-20 (Basic Analysis)	NW
6079	5	11.120318	CD ROAD I-20 WB TO I-20 (Basic Analysis)	NW
6079	6	11.451977	CD ROAD I-20 WB TO I-20 (Basic Analysis)	NW
6079	7	9.403497	CD ROAD I-20 WB TO I-20 (Basic Analysis)	NW
6079	8	10.398473	CD ROAD I-20 WB TO I-20 (Basic Analysis)	NW
6079	9	11.250381	CD ROAD I-20 WB TO I-20 (Basic Analysis)	NW
6079	10	12.281124	CD ROAD I-20 WB TO I-20 (Basic Analysis)	NW
6149	1	20.751695	I-26 EB (Merge Analysis)	S
6149	2	22.465039	I-26 EB (Merge Analysis)	S
6149	3	21.380023	I-26 EB (Merge Analysis)	S
6149	4	20.258227	I-26 EB (Merge Analysis)	S
6149	5	20.276617	I-26 EB (Merge Analysis)	S
6149	6	22.348568	I-26 EB (Merge Analysis)	S
6149	7	21.684992	I-26 EB (Merge Analysis)	S
6149	8	20.233707	I-26 EB (Merge Analysis)	S
6149	9	21.338645	I-26 EB (Merge Analysis)	S
6149	10	20.71185	I-26 EB (Merge Analysis)	S
6150	1	20.751695	I-26 EB (Merge Analysis)	S
6150	2	22.465039	I-26 EB (Merge Analysis)	S
6150	3	21.380023	I-26 EB (Merge Analysis)	S
6150	4	20.258227	I-26 EB (Merge Analysis)	S
6150	5	20.276617	I-26 EB (Merge Analysis)	S
6150	6	22.348568	I-26 EB (Merge Analysis)	S
6150	7	21.684992	I-26 EB (Merge Analysis)	S
6150	8	20.233707	I-26 EB (Merge Analysis)	S
6150	9	21.338645	I-26 EB (Merge Analysis)	S
6150	10	20.71185	I-26 EB (Merge Analysis)	S
6151	1	20.751695	I-26 EB (Merge Analysis)	S
6151	2	22.465039	I-26 EB (Merge Analysis)	S
6151	3	21.380023	I-26 EB (Merge Analysis)	S
6151	4	20.258227	I-26 EB (Merge Analysis)	S
6151	5	20.276617	I-26 EB (Merge Analysis)	S
6151	6	22.348568	I-26 EB (Merge Analysis)	S
6151	7	21.684992	I-26 EB (Merge Analysis)	S
6151	8	20.233707	I-26 EB (Merge Analysis)	S
6151	9	21.338645	I-26 EB (Merge Analysis)	S
6151	10	20.71185	I-26 EB (Merge Analysis)	S

RPA AM

ID	Run	Density	Name (Type)	Direction
6152	1	23.437537	I-26 EB (Basic Analysis)	S
6152	2	25.325395	I-26 EB (Basic Analysis)	S
6152	3	23.077527	I-26 EB (Basic Analysis)	S
6152	4	25.086559	I-26 EB (Basic Analysis)	S
6152	5	23.77823	I-26 EB (Basic Analysis)	S
6152	6	25.337688	I-26 EB (Basic Analysis)	S
6152	7	25.216514	I-26 EB (Basic Analysis)	S
6152	8	23.279484	I-26 EB (Basic Analysis)	S
6152	9	24.770453	I-26 EB (Basic Analysis)	S
6152	10	24.141752	I-26 EB (Basic Analysis)	S
6159	1	63.563758	I-26 WB (Diverge Analysis)	N
6159	2	49.258758	I-26 WB (Diverge Analysis)	N
6159	3	32.47289	I-26 WB (Diverge Analysis)	N
6159	4	57.470859	I-26 WB (Diverge Analysis)	N
6159	5	32.043509	I-26 WB (Diverge Analysis)	N
6159	6	49.951307	I-26 WB (Diverge Analysis)	N
6159	7	32.957674	I-26 WB (Diverge Analysis)	N
6159	8	65.736825	I-26 WB (Diverge Analysis)	N
6159	9	57.750957	I-26 WB (Diverge Analysis)	N
6159	10	39.633854	I-26 WB (Diverge Analysis)	N
6160	1	63.563758	I-26 WB (Diverge Analysis)	N
6160	2	49.258758	I-26 WB (Diverge Analysis)	N
6160	3	32.47289	I-26 WB (Diverge Analysis)	N
6160	4	57.470859	I-26 WB (Diverge Analysis)	N
6160	5	32.043509	I-26 WB (Diverge Analysis)	N
6160	6	49.951307	I-26 WB (Diverge Analysis)	N
6160	7	32.957674	I-26 WB (Diverge Analysis)	N
6160	8	65.736825	I-26 WB (Diverge Analysis)	N
6160	9	57.750957	I-26 WB (Diverge Analysis)	N
6160	10	39.633854	I-26 WB (Diverge Analysis)	N
6165	1	22.00789	I-26 WB (Basic Analysis)	N
6165	2	21.421911	I-26 WB (Basic Analysis)	N
6165	3	20.958154	I-26 WB (Basic Analysis)	N
6165	4	22.479642	I-26 WB (Basic Analysis)	N
6165	5	21.983902	I-26 WB (Basic Analysis)	N
6165	6	21.574974	I-26 WB (Basic Analysis)	N
6165	7	21.347664	I-26 WB (Basic Analysis)	N
6165	8	21.847974	I-26 WB (Basic Analysis)	N
6165	9	21.772585	I-26 WB (Basic Analysis)	N
6165	10	21.750882	I-26 WB (Basic Analysis)	N
6178	1	21.325831	I-26 EB (Basic Analysis)	S
6178	2	22.019893	I-26 EB (Basic Analysis)	S
6178	3	21.087383	I-26 EB (Basic Analysis)	S
6178	4	22.195947	I-26 EB (Basic Analysis)	S
6178	5	21.191372	I-26 EB (Basic Analysis)	S
6178	6	21.587978	I-26 EB (Basic Analysis)	S
6178	7	21.424983	I-26 EB (Basic Analysis)	S
6178	8	21.60007	I-26 EB (Basic Analysis)	S
6178	9	20.917133	I-26 EB (Basic Analysis)	S
6178	10	21.400316	I-26 EB (Basic Analysis)	S
6207	1	18.334229	I-20 EB (Basic Analysis)	E
6207	2	19.607123	I-20 EB (Basic Analysis)	E
6207	3	18.910086	I-20 EB (Basic Analysis)	E
6207	4	18.59264	I-20 EB (Basic Analysis)	E
6207	5	19.775426	I-20 EB (Basic Analysis)	E
6207	6	19.287087	I-20 EB (Basic Analysis)	E
6207	7	19.92923	I-20 EB (Basic Analysis)	E
6207	8	19.16539	I-20 EB (Basic Analysis)	E
6207	9	18.643907	I-20 EB (Basic Analysis)	E
6207	10	19.322301	I-20 EB (Basic Analysis)	E
6216	1	19.975697	I-20 EB (Basic Analysis)	NE
6216	2	22.421621	I-20 EB (Basic Analysis)	NE
6216	3	20.226964	I-20 EB (Basic Analysis)	NE
6216	4	20.811944	I-20 EB (Basic Analysis)	NE

RPA AM

ID	Run	Density	Name (Type)	Direction
6216	5	23.469873	I-20 EB (Basic Analysis)	NE
6216	6	20.215185	I-20 EB (Basic Analysis)	NE
6216	7	21.302699	I-20 EB (Basic Analysis)	NE
6216	8	21.051432	I-20 EB (Basic Analysis)	NE
6216	9	19.225823	I-20 EB (Basic Analysis)	NE
6216	10	20.643124	I-20 EB (Basic Analysis)	NE
6223	1	38.071854	I-26 EB (Basic Analysis)	SE
6223	2	37.168307	I-26 EB (Basic Analysis)	SE
6223	3	37.765072	I-26 EB (Basic Analysis)	SE
6223	4	37.440609	I-26 EB (Basic Analysis)	SE
6223	5	37.050722	I-26 EB (Basic Analysis)	SE
6223	6	37.204555	I-26 EB (Basic Analysis)	SE
6223	7	36.450421	I-26 EB (Basic Analysis)	SE
6223	8	37.090507	I-26 EB (Basic Analysis)	SE
6223	9	36.146291	I-26 EB (Basic Analysis)	SE
6223	10	35.899629	I-26 EB (Basic Analysis)	SE
6234	1	14.635059	I-20 WB (Basic Analysis)	SW
6234	2	14.386365	I-20 WB (Basic Analysis)	SW
6234	3	14.602743	I-20 WB (Basic Analysis)	SW
6234	4	14.739034	I-20 WB (Basic Analysis)	SW
6234	5	13.974683	I-20 WB (Basic Analysis)	SW
6234	6	14.087088	I-20 WB (Basic Analysis)	SW
6234	7	15.185841	I-20 WB (Basic Analysis)	SW
6234	8	14.973678	I-20 WB (Basic Analysis)	SW
6234	9	14.977893	I-20 WB (Basic Analysis)	SW
6234	10	14.757299	I-20 WB (Basic Analysis)	SW
6238	1	90.252779	I-20 EB (Merge Analysis)	NE
6238	2	109.030019	I-20 EB (Merge Analysis)	NE
6238	3	100.319977	I-20 EB (Merge Analysis)	NE
6238	4	92.308068	I-20 EB (Merge Analysis)	NE
6238	5	103.390198	I-20 EB (Merge Analysis)	NE
6238	6	94.756423	I-20 EB (Merge Analysis)	NE
6238	7	98.8318	I-20 EB (Merge Analysis)	NE
6238	8	86.906824	I-20 EB (Merge Analysis)	NE
6238	9	85.590736	I-20 EB (Merge Analysis)	NE
6238	10	94.433757	I-20 EB (Merge Analysis)	NE
6241	1	106.495011	I-20 EB (Basic Analysis)	NE
6241	2	121.865619	I-20 EB (Basic Analysis)	NE
6241	3	114.797465	I-20 EB (Basic Analysis)	NE
6241	4	116.189336	I-20 EB (Basic Analysis)	NE
6241	5	126.318856	I-20 EB (Basic Analysis)	NE
6241	6	111.394697	I-20 EB (Basic Analysis)	NE
6241	7	118.691702	I-20 EB (Basic Analysis)	NE
6241	8	105.624622	I-20 EB (Basic Analysis)	NE
6241	9	102.199345	I-20 EB (Basic Analysis)	NE
6241	10	111.124577	I-20 EB (Basic Analysis)	NE
6242	1	90.871763	I-20 EB (Merge Analysis)	NE
6242	2	98.685477	I-20 EB (Merge Analysis)	NE
6242	3	92.755176	I-20 EB (Merge Analysis)	NE
6242	4	96.208102	I-20 EB (Merge Analysis)	NE
6242	5	97.64393	I-20 EB (Merge Analysis)	NE
6242	6	92.454812	I-20 EB (Merge Analysis)	NE
6242	7	93.569123	I-20 EB (Merge Analysis)	NE
6242	8	89.594155	I-20 EB (Merge Analysis)	NE
6242	9	90.45379	I-20 EB (Merge Analysis)	NE
6242	10	92.613878	I-20 EB (Merge Analysis)	NE
6246	1	32.465696	I-20 WB (Merge Analysis)	SW
6246	2	30.448027	I-20 WB (Merge Analysis)	SW
6246	3	34.370597	I-20 WB (Merge Analysis)	SW
6246	4	30.645877	I-20 WB (Merge Analysis)	SW
6246	5	31.732366	I-20 WB (Merge Analysis)	SW
6246	6	31.523712	I-20 WB (Merge Analysis)	SW
6246	7	32.747278	I-20 WB (Merge Analysis)	SW
6246	8	33.486685	I-20 WB (Merge Analysis)	SW

RPA AM

ID	Run	Density	Name (Type)	Direction
6246	9	33.436041	I-20 WB (Merge Analysis)	SW
6246	10	32.904613	I-20 WB (Merge Analysis)	SW
6247	1	32.465696	I-20 WB (Merge Analysis)	SW
6247	2	30.448027	I-20 WB (Merge Analysis)	SW
6247	3	34.370597	I-20 WB (Merge Analysis)	SW
6247	4	30.645877	I-20 WB (Merge Analysis)	SW
6247	5	31.732366	I-20 WB (Merge Analysis)	SW
6247	6	31.523712	I-20 WB (Merge Analysis)	SW
6247	7	32.747278	I-20 WB (Merge Analysis)	SW
6247	8	33.486685	I-20 WB (Merge Analysis)	SW
6247	9	33.436041	I-20 WB (Merge Analysis)	SW
6247	10	32.904613	I-20 WB (Merge Analysis)	SW
6249	1	36.867171	I-20 WB (Basic Analysis)	SW
6249	2	35.051371	I-20 WB (Basic Analysis)	SW
6249	3	38.062191	I-20 WB (Basic Analysis)	SW
6249	4	34.770279	I-20 WB (Basic Analysis)	SW
6249	5	35.004311	I-20 WB (Basic Analysis)	SW
6249	6	35.962388	I-20 WB (Basic Analysis)	SW
6249	7	36.876816	I-20 WB (Basic Analysis)	SW
6249	8	37.862518	I-20 WB (Basic Analysis)	SW
6249	9	38.162918	I-20 WB (Basic Analysis)	SW
6249	10	36.608717	I-20 WB (Basic Analysis)	SW
6251	1	36.733863	I-20 WB (Basic Analysis)	SW
6251	2	35.997621	I-20 WB (Basic Analysis)	SW
6251	3	40.244978	I-20 WB (Basic Analysis)	SW
6251	4	34.350079	I-20 WB (Basic Analysis)	SW
6251	5	35.4054	I-20 WB (Basic Analysis)	SW
6251	6	35.91692	I-20 WB (Basic Analysis)	SW
6251	7	36.961068	I-20 WB (Basic Analysis)	SW
6251	8	37.155991	I-20 WB (Basic Analysis)	SW
6251	9	38.443483	I-20 WB (Basic Analysis)	SW
6251	10	35.695924	I-20 WB (Basic Analysis)	SW
6254	1	35.688184	I-20 EB (Basic Analysis)	NE
6254	2	34.930141	I-20 EB (Basic Analysis)	NE
6254	3	34.940164	I-20 EB (Basic Analysis)	NE
6254	4	36.030244	I-20 EB (Basic Analysis)	NE
6254	5	35.280971	I-20 EB (Basic Analysis)	NE
6254	6	36.050291	I-20 EB (Basic Analysis)	NE
6254	7	35.933765	I-20 EB (Basic Analysis)	NE
6254	8	36.186864	I-20 EB (Basic Analysis)	NE
6254	9	36.387338	I-20 EB (Basic Analysis)	NE
6254	10	35.289742	I-20 EB (Basic Analysis)	NE
6258	1	33.678207	I-20 EB (Merge Analysis)	NE
6258	2	34.183533	I-20 EB (Merge Analysis)	NE
6258	3	34.16583	I-20 EB (Merge Analysis)	NE
6258	4	34.877149	I-20 EB (Merge Analysis)	NE
6258	5	32.342472	I-20 EB (Merge Analysis)	NE
6258	6	33.853623	I-20 EB (Merge Analysis)	NE
6258	7	34.299404	I-20 EB (Merge Analysis)	NE
6258	8	34.806339	I-20 EB (Merge Analysis)	NE
6258	9	35.234418	I-20 EB (Merge Analysis)	NE
6258	10	35.123375	I-20 EB (Merge Analysis)	NE
6259	1	33.678207	I-20 EB (Merge Analysis)	NE
6259	2	34.183533	I-20 EB (Merge Analysis)	NE
6259	3	34.16583	I-20 EB (Merge Analysis)	NE
6259	4	34.877149	I-20 EB (Merge Analysis)	NE
6259	5	32.342472	I-20 EB (Merge Analysis)	NE
6259	6	33.853623	I-20 EB (Merge Analysis)	NE
6259	7	34.299404	I-20 EB (Merge Analysis)	NE

RPA AM

ID	Run	Density	Name (Type)	Direction
6259	8	34.806339	I-20 EB (Merge Analysis)	NE
6259	9	35.234418	I-20 EB (Merge Analysis)	NE
6259	10	35.123375	I-20 EB (Merge Analysis)	NE
8539	1	15.97033	I-20 WB (Basic Analysis)	SW
8539	2	15.174863	I-20 WB (Basic Analysis)	SW
8539	3	15.627026	I-20 WB (Basic Analysis)	SW
8539	4	15.058248	I-20 WB (Basic Analysis)	SW
8539	5	15.36323	I-20 WB (Basic Analysis)	SW
8539	6	16.368238	I-20 WB (Basic Analysis)	SW
8539	7	15.056384	I-20 WB (Basic Analysis)	SW
8539	8	15.502303	I-20 WB (Basic Analysis)	SW
8539	9	15.273805	I-20 WB (Basic Analysis)	SW
8539	10	16.285397	I-20 WB (Basic Analysis)	SW
8542	1	31.130778	I-20 EB (Basic Analysis)	NE
8542	2	33.559032	I-20 EB (Basic Analysis)	NE
8542	3	30.760785	I-20 EB (Basic Analysis)	NE
8542	4	28.675294	I-20 EB (Basic Analysis)	NE
8542	5	31.156604	I-20 EB (Basic Analysis)	NE
8542	6	33.929025	I-20 EB (Basic Analysis)	NE
8542	7	31.77251	I-20 EB (Basic Analysis)	NE
8542	8	31.565056	I-20 EB (Basic Analysis)	NE
8542	9	29.561536	I-20 EB (Basic Analysis)	NE
8542	10	29.618242	I-20 EB (Basic Analysis)	NE
8554	1	16.636042	I-26 WB (Basic Analysis)	N
8554	2	17.282771	I-26 WB (Basic Analysis)	N
8554	3	16.665071	I-26 WB (Basic Analysis)	N
8554	4	17.160581	I-26 WB (Basic Analysis)	N
8554	5	17.305049	I-26 WB (Basic Analysis)	N
8554	6	16.803125	I-26 WB (Basic Analysis)	N
8554	7	17.020839	I-26 WB (Basic Analysis)	N
8554	8	16.642456	I-26 WB (Basic Analysis)	N
8554	9	17.291547	I-26 WB (Basic Analysis)	N
8554	10	17.362093	I-26 WB (Basic Analysis)	N
8559	1	15.530516	I-126 NB (Basic Analysis)	W
8559	2	14.892974	I-126 NB (Basic Analysis)	W
8559	3	14.06842	I-126 NB (Basic Analysis)	W
8559	4	13.588139	I-126 NB (Basic Analysis)	W
8559	5	15.564518	I-126 NB (Basic Analysis)	W
8559	6	14.710212	I-126 NB (Basic Analysis)	W
8559	7	14.391441	I-126 NB (Basic Analysis)	W
8559	8	13.945162	I-126 NB (Basic Analysis)	W
8559	9	15.526266	I-126 NB (Basic Analysis)	W
8559	10	13.75815	I-126 NB (Basic Analysis)	W
8560	1	53.390994	I-126 SB (Basic Analysis)	E
8560	2	52.647832	I-126 SB (Basic Analysis)	E
8560	3	48.568498	I-126 SB (Basic Analysis)	E
8560	4	51.526966	I-126 SB (Basic Analysis)	E
8560	5	47.839517	I-126 SB (Basic Analysis)	E
8560	6	48.373201	I-126 SB (Basic Analysis)	E
8560	7	48.202396	I-126 SB (Basic Analysis)	E
8560	8	46.843048	I-126 SB (Basic Analysis)	E
8560	9	50.017439	I-126 SB (Basic Analysis)	E
8560	10	50.134102	I-126 SB (Basic Analysis)	E
8658	1	32.465696	I-20 WB (Merge Analysis)	SW
8658	2	30.448027	I-20 WB (Merge Analysis)	SW
8658	3	34.370597	I-20 WB (Merge Analysis)	SW
8658	4	30.645877	I-20 WB (Merge Analysis)	SW

ID	Run	Density	Name (Type)	Direction
8658	5	31.732366	I-20 WB (Merge Analysis)	SW
8658	6	31.523712	I-20 WB (Merge Analysis)	SW
8658	7	32.747278	I-20 WB (Merge Analysis)	SW
8658	8	33.486685	I-20 WB (Merge Analysis)	SW
8658	9	33.436041	I-20 WB (Merge Analysis)	SW
8658	10	32.904613	I-20 WB (Merge Analysis)	SW
8659	1	56.628549	I-20 EB (Basic Analysis)	NE
8659	2	57.493605	I-20 EB (Basic Analysis)	NE
8659	3	56.630433	I-20 EB (Basic Analysis)	NE
8659	4	58.540352	I-20 EB (Basic Analysis)	NE
8659	5	58.210903	I-20 EB (Basic Analysis)	NE
8659	6	56.449472	I-20 EB (Basic Analysis)	NE
8659	7	56.53323	I-20 EB (Basic Analysis)	NE
8659	8	56.564499	I-20 EB (Basic Analysis)	NE
8659	9	56.99883	I-20 EB (Basic Analysis)	NE
8659	10	56.641015	I-20 EB (Basic Analysis)	NE
8763	1	28.042624	I-26 EB (Basic Analysis)	SE
8763	2	29.000495	I-26 EB (Basic Analysis)	SE
8763	3	28.376622	I-26 EB (Basic Analysis)	SE
8763	4	28.256211	I-26 EB (Basic Analysis)	SE
8763	5	28.517794	I-26 EB (Basic Analysis)	SE
8763	6	28.484506	I-26 EB (Basic Analysis)	SE
8763	7	28.48519	I-26 EB (Basic Analysis)	SE
8763	8	27.785845	I-26 EB (Basic Analysis)	SE
8763	9	28.264737	I-26 EB (Basic Analysis)	SE
8763	10	28.33844	I-26 EB (Basic Analysis)	SE
8764	1	15.51989	I-20 WB (Basic Analysis)	S
8764	2	14.826592	I-20 WB (Basic Analysis)	S
8764	3	15.303573	I-20 WB (Basic Analysis)	S
8764	4	15.040722	I-20 WB (Basic Analysis)	S
8764	5	15.065812	I-20 WB (Basic Analysis)	S
8764	6	15.527117	I-20 WB (Basic Analysis)	S
8764	7	15.996618	I-20 WB (Basic Analysis)	S
8764	8	15.376429	I-20 WB (Basic Analysis)	S
8764	9	15.29834	I-20 WB (Basic Analysis)	S
8764	10	16.144402	I-20 WB (Basic Analysis)	S
8765	1	37.671435	I-20 EB (Basic Analysis)	NE
8765	2	42.555665	I-20 EB (Basic Analysis)	NE
8765	3	37.582901	I-20 EB (Basic Analysis)	NE
8765	4	37.923211	I-20 EB (Basic Analysis)	NE
8765	5	40.717901	I-20 EB (Basic Analysis)	NE
8765	6	37.740555	I-20 EB (Basic Analysis)	NE
8765	7	40.669128	I-20 EB (Basic Analysis)	NE
8765	8	38.393887	I-20 EB (Basic Analysis)	NE
8765	9	36.496668	I-20 EB (Basic Analysis)	NE
8765	10	38.355338	I-20 EB (Basic Analysis)	NE
8770	1	38.491465	I-20 WB (Basic Analysis)	SW
8770	2	39.361001	I-20 WB (Basic Analysis)	SW
8770	3	38.575391	I-20 WB (Basic Analysis)	SW
8770	4	36.735954	I-20 WB (Basic Analysis)	SW
8770	5	38.076597	I-20 WB (Basic Analysis)	SW
8770	6	37.891875	I-20 WB (Basic Analysis)	SW
8770	7	38.369471	I-20 WB (Basic Analysis)	SW
8770	8	39.279239	I-20 WB (Basic Analysis)	SW
8770	9	39.046065	I-20 WB (Basic Analysis)	SW
8770	10	39.198775	I-20 WB (Basic Analysis)	SW
8773	1	44.981454	I-26 WB (Basic Analysis)	N

RPA AM

ID	Run	Density	Name (Type)	Direction
8773	2	33.27755	I-26 WB (Basic Analysis)	N
8773	3	27.148842	I-26 WB (Basic Analysis)	N
8773	4	34.862408	I-26 WB (Basic Analysis)	N
8773	5	28.230641	I-26 WB (Basic Analysis)	N
8773	6	32.370858	I-26 WB (Basic Analysis)	N
8773	7	27.775069	I-26 WB (Basic Analysis)	N
8773	8	42.365253	I-26 WB (Basic Analysis)	N
8773	9	45.646263	I-26 WB (Basic Analysis)	N
8773	10	29.040877	I-26 WB (Basic Analysis)	N
8774	1	45.030082	I-20 EB (Diverge Analysis)	NE
8774	2	45.320744	I-20 EB (Diverge Analysis)	NE
8774	3	44.314609	I-20 EB (Diverge Analysis)	NE
8774	4	44.549374	I-20 EB (Diverge Analysis)	NE
8774	5	46.846713	I-20 EB (Diverge Analysis)	NE
8774	6	45.636558	I-20 EB (Diverge Analysis)	NE
8774	7	44.037923	I-20 EB (Diverge Analysis)	NE
8774	8	44.149715	I-20 EB (Diverge Analysis)	NE
8774	9	43.909361	I-20 EB (Diverge Analysis)	NE
8774	10	45.544329	I-20 EB (Diverge Analysis)	NE
8784	1	28.249856	I-126 SB (Basic Analysis)	SE
8784	2	28.888759	I-126 SB (Basic Analysis)	SE
8784	3	28.4227	I-126 SB (Basic Analysis)	SE
8784	4	28.728262	I-126 SB (Basic Analysis)	SE
8784	5	28.328562	I-126 SB (Basic Analysis)	SE
8784	6	27.104769	I-126 SB (Basic Analysis)	SE
8784	7	28.169608	I-126 SB (Basic Analysis)	SE
8784	8	28.753725	I-126 SB (Basic Analysis)	SE
8784	9	27.495982	I-126 SB (Basic Analysis)	SE
8784	10	28.256029	I-126 SB (Basic Analysis)	SE
8789	1	21.325831	I-26 EB (Basic Analysis)	S
8789	2	22.019893	I-26 EB (Basic Analysis)	S
8789	3	21.087383	I-26 EB (Basic Analysis)	S
8789	4	22.195947	I-26 EB (Basic Analysis)	S
8789	5	21.191372	I-26 EB (Basic Analysis)	S
8789	6	21.587978	I-26 EB (Basic Analysis)	S
8789	7	21.424983	I-26 EB (Basic Analysis)	S
8789	8	21.60007	I-26 EB (Basic Analysis)	S
8789	9	20.917133	I-26 EB (Basic Analysis)	S
8789	10	21.400316	I-26 EB (Basic Analysis)	S
8790	1	25.882748	CD ROAD I-26 WB TO I-20 (Basic Analysis)	NE
8790	2	30.380723	CD ROAD I-26 WB TO I-20 (Basic Analysis)	NE
8790	3	26.48377	CD ROAD I-26 WB TO I-20 (Basic Analysis)	NE
8790	4	30.0996	CD ROAD I-26 WB TO I-20 (Basic Analysis)	NE
8790	5	28.71337	CD ROAD I-26 WB TO I-20 (Basic Analysis)	NE
8790	6	27.42408	CD ROAD I-26 WB TO I-20 (Basic Analysis)	NE
8790	7	27.59857	CD ROAD I-26 WB TO I-20 (Basic Analysis)	NE
8790	8	26.183259	CD ROAD I-26 WB TO I-20 (Basic Analysis)	NE
8790	9	25.46591	CD ROAD I-26 WB TO I-20 (Basic Analysis)	NE
8790	10	26.697037	CD ROAD I-26 WB TO I-20 (Basic Analysis)	NE
8791	1	11.618618	CD ROAD I-20 WB TO I-20 (Basic Analysis)	NE
8791	2	11.879385	CD ROAD I-20 WB TO I-20 (Basic Analysis)	NE
8791	3	12.625468	CD ROAD I-20 WB TO I-20 (Basic Analysis)	NE
8791	4	10.691446	CD ROAD I-20 WB TO I-20 (Basic Analysis)	NE
8791	5	12.668929	CD ROAD I-20 WB TO I-20 (Basic Analysis)	NE
8791	6	10.264078	CD ROAD I-20 WB TO I-20 (Basic Analysis)	NE
8791	7	11.33612	CD ROAD I-20 WB TO I-20 (Basic Analysis)	NE
8791	8	11.155032	CD ROAD I-20 WB TO I-20 (Basic Analysis)	NE

ID	Run	Density	Name (Type)	Direction
8791	9	10.778368	CD ROAD I-20 WB TO I-20 (Basic Analysis)	NE
8791	10	12.09669	CD ROAD I-20 WB TO I-20 (Basic Analysis)	NE
8792	1	17.443336	I-26 EB (Basic Analysis)	S
8792	2	17.28203	I-26 EB (Basic Analysis)	S
8792	3	16.932525	I-26 EB (Basic Analysis)	S
8792	4	17.901837	I-26 EB (Basic Analysis)	S
8792	5	17.098118	I-26 EB (Basic Analysis)	S
8792	6	17.55076	I-26 EB (Basic Analysis)	S
8792	7	17.090004	I-26 EB (Basic Analysis)	S
8792	8	17.336907	I-26 EB (Basic Analysis)	S
8792	9	16.242395	I-26 EB (Basic Analysis)	S
8792	10	16.808694	I-26 EB (Basic Analysis)	S
8802	1	28.960967	CD ROAD I-20 EB (Basic Analysis)	NE
8802	2	28.312401	CD ROAD I-20 EB (Basic Analysis)	NE
8802	3	27.85404	CD ROAD I-20 EB (Basic Analysis)	NE
8802	4	28.390354	CD ROAD I-20 EB (Basic Analysis)	NE
8802	5	28.826889	CD ROAD I-20 EB (Basic Analysis)	NE
8802	6	28.833125	CD ROAD I-20 EB (Basic Analysis)	NE
8802	7	28.589913	CD ROAD I-20 EB (Basic Analysis)	NE
8802	8	29.013975	CD ROAD I-20 EB (Basic Analysis)	NE
8802	9	27.654481	CD ROAD I-20 EB (Basic Analysis)	NE
8802	10	27.386324	CD ROAD I-20 EB (Basic Analysis)	NE
8819	1	11.425469	CD ROAD I-20 WB (Weaving Analysis)	SW
8819	2	11.268894	CD ROAD I-20 WB (Weaving Analysis)	SW
8819	3	11.339654	CD ROAD I-20 WB (Weaving Analysis)	SW
8819	4	10.665177	CD ROAD I-20 WB (Weaving Analysis)	SW
8819	5	11.286961	CD ROAD I-20 WB (Weaving Analysis)	SW
8819	6	11.792819	CD ROAD I-20 WB (Weaving Analysis)	SW
8819	7	11.279433	CD ROAD I-20 WB (Weaving Analysis)	SW
8819	8	10.931655	CD ROAD I-20 WB (Weaving Analysis)	SW
8819	9	10.60345	CD ROAD I-20 WB (Weaving Analysis)	SW
8819	10	12.026176	CD ROAD I-20 WB (Weaving Analysis)	SW
8826	1	16.822925	CD ROAD I-20 EB (Basic Analysis)	E
8826	2	16.939536	CD ROAD I-20 EB (Basic Analysis)	E
8826	3	16.463573	CD ROAD I-20 EB (Basic Analysis)	E
8826	4	16.311264	CD ROAD I-20 EB (Basic Analysis)	E
8826	5	17.006171	CD ROAD I-20 EB (Basic Analysis)	E
8826	6	16.256529	CD ROAD I-20 EB (Basic Analysis)	E
8826	7	15.918595	CD ROAD I-20 EB (Basic Analysis)	E
8826	8	18.598269	CD ROAD I-20 EB (Basic Analysis)	E
8826	9	16.518309	CD ROAD I-20 EB (Basic Analysis)	E
8826	10	17.872424	CD ROAD I-20 EB (Basic Analysis)	E
8828	1	20.214473	(Weaving Analysis)	NW
8828	2	18.650895	(Weaving Analysis)	NW
8828	3	18.495374	(Weaving Analysis)	NW
8828	4	18.446878	(Weaving Analysis)	NW
8828	5	17.803051	(Weaving Analysis)	NW
8828	6	18.856585	(Weaving Analysis)	NW
8828	7	18.717786	(Weaving Analysis)	NW
8828	8	20.304776	(Weaving Analysis)	NW
8828	9	19.376663	(Weaving Analysis)	NW
8828	10	18.568954	(Weaving Analysis)	NW
8829	1	38.78584	CD ROAD I-20 EB (Basic Analysis)	E
8829	2	77.905159	CD ROAD I-20 EB (Basic Analysis)	E
8829	3	63.753787	CD ROAD I-20 EB (Basic Analysis)	E
8829	4	62.718387	CD ROAD I-20 EB (Basic Analysis)	E
8829	5	66.40011	CD ROAD I-20 EB (Basic Analysis)	E

RPA AM

ID	Run	Density	Name (Type)	Direction
8829	6	64.705818	CD ROAD I-20 EB (Basic Analysis)	E
8829	7	70.565917	CD ROAD I-20 EB (Basic Analysis)	E
8829	8	44.584084	CD ROAD I-20 EB (Basic Analysis)	E
8829	9	36.136828	CD ROAD I-20 EB (Basic Analysis)	E
8829	10	66.322119	CD ROAD I-20 EB (Basic Analysis)	E
8830	1	27.853338	CD ROAD I-26 EB (Weaving Analysis)	SE
8830	2	50.341885	CD ROAD I-26 EB (Weaving Analysis)	SE
8830	3	28.585925	CD ROAD I-26 EB (Weaving Analysis)	SE
8830	4	26.771363	CD ROAD I-26 EB (Weaving Analysis)	SE
8830	5	28.116318	CD ROAD I-26 EB (Weaving Analysis)	SE
8830	6	29.397406	CD ROAD I-26 EB (Weaving Analysis)	SE
8830	7	29.01045	CD ROAD I-26 EB (Weaving Analysis)	SE
8830	8	26.196564	CD ROAD I-26 EB (Weaving Analysis)	SE
8830	9	28.037424	CD ROAD I-26 EB (Weaving Analysis)	SE
8830	10	31.910744	CD ROAD I-26 EB (Weaving Analysis)	SE
8831	1	34.125173	I-20 WB (Diverge Analysis)	SW
8831	2	32.501259	I-20 WB (Diverge Analysis)	SW
8831	3	36.651857	I-20 WB (Diverge Analysis)	SW
8831	4	32.003127	I-20 WB (Diverge Analysis)	SW
8831	5	33.466086	I-20 WB (Diverge Analysis)	SW
8831	6	33.243861	I-20 WB (Diverge Analysis)	SW
8831	7	33.950829	I-20 WB (Diverge Analysis)	SW
8831	8	34.876204	I-20 WB (Diverge Analysis)	SW
8831	9	35.490057	I-20 WB (Diverge Analysis)	SW
8831	10	34.184949	I-20 WB (Diverge Analysis)	SW
8832	1	34.125173	I-20 WB (Diverge Analysis)	SW
8832	2	32.501259	I-20 WB (Diverge Analysis)	SW
8832	3	36.651857	I-20 WB (Diverge Analysis)	SW
8832	4	32.003127	I-20 WB (Diverge Analysis)	SW
8832	5	33.466086	I-20 WB (Diverge Analysis)	SW
8832	6	33.243861	I-20 WB (Diverge Analysis)	SW
8832	7	33.950829	I-20 WB (Diverge Analysis)	SW
8832	8	34.876204	I-20 WB (Diverge Analysis)	SW
8832	9	35.490057	I-20 WB (Diverge Analysis)	SW
8832	10	34.184949	I-20 WB (Diverge Analysis)	SW
8837	1	11.575568	I-20 WB (Basic Analysis)	W
8837	2	10.951307	I-20 WB (Basic Analysis)	W
8837	3	10.633938	I-20 WB (Basic Analysis)	W
8837	4	10.944095	I-20 WB (Basic Analysis)	W
8837	5	9.594311	I-20 WB (Basic Analysis)	W
8837	6	10.519112	I-20 WB (Basic Analysis)	W
8837	7	11.995802	I-20 WB (Basic Analysis)	W
8837	8	11.23369	I-20 WB (Basic Analysis)	W
8837	9	11.598612	I-20 WB (Basic Analysis)	W
8837	10	12.077895	I-20 WB (Basic Analysis)	W
8838	1	9.166049	I-20 WB (Basic Analysis)	SW
8838	2	9.717536	I-20 WB (Basic Analysis)	SW
8838	3	9.546412	I-20 WB (Basic Analysis)	SW
8838	4	9.008147	I-20 WB (Basic Analysis)	SW
8838	5	9.033816	I-20 WB (Basic Analysis)	SW
8838	6	9.405623	I-20 WB (Basic Analysis)	SW
8838	7	9.400956	I-20 WB (Basic Analysis)	SW
8838	8	9.38851	I-20 WB (Basic Analysis)	SW
8838	9	9.331728	I-20 WB (Basic Analysis)	SW
8838	10	9.747094	I-20 WB (Basic Analysis)	SW
8839	1	56.628549	I-20 EB (Basic Analysis)	NE
8839	2	57.493605	I-20 EB (Basic Analysis)	NE

RPA AM

ID	Run	Density	Name (Type)	Direction
8839	3	56.630433	I-20 EB (Basic Analysis)	NE
8839	4	58.540352	I-20 EB (Basic Analysis)	NE
8839	5	58.210903	I-20 EB (Basic Analysis)	NE
8839	6	56.449472	I-20 EB (Basic Analysis)	NE
8839	7	56.53323	I-20 EB (Basic Analysis)	NE
8839	8	56.564499	I-20 EB (Basic Analysis)	NE
8839	9	56.99883	I-20 EB (Basic Analysis)	NE
8839	10	56.641015	I-20 EB (Basic Analysis)	NE
8845	1	7.965131	I-20 WB (Merge Analysis)	W
8845	2	7.738723	I-20 WB (Merge Analysis)	W
8845	3	7.926476	I-20 WB (Merge Analysis)	W
8845	4	7.997159	I-20 WB (Merge Analysis)	W
8845	5	7.567537	I-20 WB (Merge Analysis)	W
8845	6	7.998264	I-20 WB (Merge Analysis)	W
8845	7	8.987831	I-20 WB (Merge Analysis)	W
8845	8	8.146257	I-20 WB (Merge Analysis)	W
8845	9	7.865732	I-20 WB (Merge Analysis)	W
8845	10	7.722157	I-20 WB (Merge Analysis)	W
8849	1	21.009314	CD ROAD I-20 WB (Weaving Analysis)	W
8849	2	20.155355	CD ROAD I-20 WB (Weaving Analysis)	W
8849	3	20.751363	CD ROAD I-20 WB (Weaving Analysis)	W
8849	4	20.405294	CD ROAD I-20 WB (Weaving Analysis)	W
8849	5	20.754568	CD ROAD I-20 WB (Weaving Analysis)	W
8849	6	20.942022	CD ROAD I-20 WB (Weaving Analysis)	W
8849	7	21.046164	CD ROAD I-20 WB (Weaving Analysis)	W
8849	8	21.467536	CD ROAD I-20 WB (Weaving Analysis)	W
8849	9	20.735342	CD ROAD I-20 WB (Weaving Analysis)	W
8849	10	19.790059	CD ROAD I-20 WB (Weaving Analysis)	W
8852	1	22.353691	(Basic Analysis)	E
8852	2	22.423743	(Basic Analysis)	E
8852	3	21.558597	(Basic Analysis)	E
8852	4	21.884341	(Basic Analysis)	E
8852	5	20.493802	(Basic Analysis)	E
8852	6	21.075236	(Basic Analysis)	E
8852	7	22.00343	(Basic Analysis)	E
8852	8	21.824796	(Basic Analysis)	E
8852	9	21.309912	(Basic Analysis)	E
8852	10	21.845812	(Basic Analysis)	E
8853	1	30.290505	CD ROAD I-20 EB (Basic Analysis)	E
8853	2	30.825613	CD ROAD I-20 EB (Basic Analysis)	E
8853	3	28.476614	CD ROAD I-20 EB (Basic Analysis)	E
8853	4	29.237142	CD ROAD I-20 EB (Basic Analysis)	E
8853	5	28.225914	CD ROAD I-20 EB (Basic Analysis)	E
8853	6	29.557364	CD ROAD I-20 EB (Basic Analysis)	E
8853	7	28.632512	CD ROAD I-20 EB (Basic Analysis)	E
8853	8	28.034202	CD ROAD I-20 EB (Basic Analysis)	E
8853	9	28.887426	CD ROAD I-20 EB (Basic Analysis)	E
8853	10	29.6311	CD ROAD I-20 EB (Basic Analysis)	E
8855	1	11.409735	CD ROAD I-20 WB TO I-20 (Basic Analysis)	NW
8855	2	10.902528	CD ROAD I-20 WB TO I-20 (Basic Analysis)	NW
8855	3	12.095672	CD ROAD I-20 WB TO I-20 (Basic Analysis)	NW
8855	4	11.536939	CD ROAD I-20 WB TO I-20 (Basic Analysis)	NW
8855	5	10.991088	CD ROAD I-20 WB TO I-20 (Basic Analysis)	NW
8855	6	10.574052	CD ROAD I-20 WB TO I-20 (Basic Analysis)	NW
8855	7	10.689985	CD ROAD I-20 WB TO I-20 (Basic Analysis)	NW
8855	8	11.264819	CD ROAD I-20 WB TO I-20 (Basic Analysis)	NW
8855	9	11.179479	CD ROAD I-20 WB TO I-20 (Basic Analysis)	NW

RPA AM

ID	Run	Density	Name (Type)	Direction
8855	10	11.173039	CD ROAD I-20 WB TO I-20 (Basic Analysis)	NW
8863	1	35.020623	(Basic Analysis)	SE
8863	2	33.603972	(Basic Analysis)	SE
8863	3	34.15787	(Basic Analysis)	SE
8863	4	34.868748	(Basic Analysis)	SE
8863	5	33.473794	(Basic Analysis)	SE
8863	6	33.649917	(Basic Analysis)	SE
8863	7	33.646089	(Basic Analysis)	SE
8863	8	33.828594	(Basic Analysis)	SE
8863	9	34.238274	(Basic Analysis)	SE
8863	10	33.597591	(Basic Analysis)	SE
8869	1	26.446216	(Weaving Analysis)	SE
8869	2	26.304561	(Weaving Analysis)	SE
8869	3	26.220529	(Weaving Analysis)	SE
8869	4	25.639504	(Weaving Analysis)	SE
8869	5	26.218128	(Weaving Analysis)	SE
8869	6	25.457034	(Weaving Analysis)	SE
8869	7	26.782346	(Weaving Analysis)	SE
8869	8	26.04286	(Weaving Analysis)	SE
8869	9	26.021252	(Weaving Analysis)	SE
8869	10	26.314165	(Weaving Analysis)	SE
8871	1	17.480042	(Basic Analysis)	W
8871	2	17.829888	(Basic Analysis)	W
8871	3	16.722042	(Basic Analysis)	W
8871	4	13.766761	(Basic Analysis)	W
8871	5	14.742648	(Basic Analysis)	W
8871	6	14.785612	(Basic Analysis)	W
8871	7	15.562025	(Basic Analysis)	W
8871	8	16.154309	(Basic Analysis)	W
8871	9	15.635677	(Basic Analysis)	W
8871	10	15.41779	(Basic Analysis)	W
8877	1	7.81117	I-20 WB (Diverge Analysis)	W
8877	2	7.620283	I-20 WB (Diverge Analysis)	W
8877	3	7.910647	I-20 WB (Diverge Analysis)	W
8877	4	7.937578	I-20 WB (Diverge Analysis)	W
8877	5	7.569211	I-20 WB (Diverge Analysis)	W
8877	6	8.194058	I-20 WB (Diverge Analysis)	W
8877	7	8.933693	I-20 WB (Diverge Analysis)	W
8877	8	7.946949	I-20 WB (Diverge Analysis)	W
8877	9	8.068365	I-20 WB (Diverge Analysis)	W
8877	10	7.674505	I-20 WB (Diverge Analysis)	W
8878	1	11.575568	I-20 WB (Basic Analysis)	W
8878	2	10.951307	I-20 WB (Basic Analysis)	W
8878	3	10.633938	I-20 WB (Basic Analysis)	W
8878	4	10.944095	I-20 WB (Basic Analysis)	W
8878	5	9.594311	I-20 WB (Basic Analysis)	W
8878	6	10.519112	I-20 WB (Basic Analysis)	W
8878	7	11.995802	I-20 WB (Basic Analysis)	W
8878	8	11.23369	I-20 WB (Basic Analysis)	W
8878	9	11.598612	I-20 WB (Basic Analysis)	W
8878	10	12.077895	I-20 WB (Basic Analysis)	W
8883	1	35.07253	I-26 WB (Basic Analysis)	NW
8883	2	33.897541	I-26 WB (Basic Analysis)	NW
8883	3	36.379589	I-26 WB (Basic Analysis)	NW
8883	4	35.509392	I-26 WB (Basic Analysis)	NW
8883	5	30.45493	I-26 WB (Basic Analysis)	NW
8883	6	37.360375	I-26 WB (Basic Analysis)	NW

RPA AM

ID	Run	Density	Name (Type)	Direction
8883	7	36.733467	I-26 WB (Basic Analysis)	NW
8883	8	35.760714	I-26 WB (Basic Analysis)	NW
8883	9	37.768851	I-26 WB (Basic Analysis)	NW
8883	10	35.783178	I-26 WB (Basic Analysis)	NW
8886	1	28.293626	I-26 WB (Basic Analysis)	NW
8886	2	27.787719	I-26 WB (Basic Analysis)	NW
8886	3	27.835412	I-26 WB (Basic Analysis)	NW
8886	4	26.653659	I-26 WB (Basic Analysis)	NW
8886	5	27.683122	I-26 WB (Basic Analysis)	NW
8886	6	27.287443	I-26 WB (Basic Analysis)	NW
8886	7	26.633129	I-26 WB (Basic Analysis)	NW
8886	8	27.417191	I-26 WB (Basic Analysis)	NW
8886	9	27.412658	I-26 WB (Basic Analysis)	NW
8886	10	27.653471	I-26 WB (Basic Analysis)	NW
8887	1	28.000625	I-26 WB (Merge Analysis)	NW
8887	2	28.264606	I-26 WB (Merge Analysis)	NW
8887	3	28.393508	I-26 WB (Merge Analysis)	NW
8887	4	26.774301	I-26 WB (Merge Analysis)	NW
8887	5	27.504445	I-26 WB (Merge Analysis)	NW
8887	6	27.557417	I-26 WB (Merge Analysis)	NW
8887	7	27.756066	I-26 WB (Merge Analysis)	NW
8887	8	28.424408	I-26 WB (Merge Analysis)	NW
8887	9	28.314931	I-26 WB (Merge Analysis)	NW
8887	10	27.666895	I-26 WB (Merge Analysis)	NW
8910	1	74.424249	I-26 EB (Basic Analysis)	SE
8910	2	74.358389	I-26 EB (Basic Analysis)	SE
8910	3	77.546944	I-26 EB (Basic Analysis)	SE
8910	4	71.330467	I-26 EB (Basic Analysis)	SE
8910	5	68.556344	I-26 EB (Basic Analysis)	SE
8910	6	77.80235	I-26 EB (Basic Analysis)	SE
8910	7	69.208511	I-26 EB (Basic Analysis)	SE
8910	8	68.453538	I-26 EB (Basic Analysis)	SE
8910	9	66.003893	I-26 EB (Basic Analysis)	SE
8910	10	71.099156	I-26 EB (Basic Analysis)	SE
8915	1	28.003625	I-26 EB (Basic Analysis)	SE
8915	2	28.760074	I-26 EB (Basic Analysis)	SE
8915	3	28.503803	I-26 EB (Basic Analysis)	SE
8915	4	27.821059	I-26 EB (Basic Analysis)	SE
8915	5	27.457867	I-26 EB (Basic Analysis)	SE
8915	6	29.283284	I-26 EB (Basic Analysis)	SE
8915	7	27.112131	I-26 EB (Basic Analysis)	SE
8915	8	26.762031	I-26 EB (Basic Analysis)	SE
8915	9	27.439926	I-26 EB (Basic Analysis)	SE
8915	10	27.897432	I-26 EB (Basic Analysis)	SE
8940	1	41.947796	I-26 EB (Basic Analysis)	SE
8940	2	40.090777	I-26 EB (Basic Analysis)	SE
8940	3	43.179054	I-26 EB (Basic Analysis)	SE
8940	4	41.215348	I-26 EB (Basic Analysis)	SE
8940	5	39.90211	I-26 EB (Basic Analysis)	SE
8940	6	40.863382	I-26 EB (Basic Analysis)	SE
8940	7	42.631172	I-26 EB (Basic Analysis)	SE
8940	8	37.140236	I-26 EB (Basic Analysis)	SE
8940	9	42.544421	I-26 EB (Basic Analysis)	SE
8940	10	39.706194	I-26 EB (Basic Analysis)	SE
8955	1	102.945406	I-20 EB (Basic Analysis)	NE
8955	2	115.267583	I-20 EB (Basic Analysis)	NE
8955	3	112.146002	I-20 EB (Basic Analysis)	NE

RPA AM

ID	Run	Density	Name (Type)	Direction
8955	4	107.599956	I-20 EB (Basic Analysis)	NE
8955	5	117.407063	I-20 EB (Basic Analysis)	NE
8955	6	101.601623	I-20 EB (Basic Analysis)	NE
8955	7	113.052986	I-20 EB (Basic Analysis)	NE
8955	8	97.439516	I-20 EB (Basic Analysis)	NE
8955	9	95.542084	I-20 EB (Basic Analysis)	NE
8955	10	105.043153	I-20 EB (Basic Analysis)	NE
8959	1	15.97033	I-20 WB (Basic Analysis)	SW
8959	2	15.174863	I-20 WB (Basic Analysis)	SW
8959	3	15.627026	I-20 WB (Basic Analysis)	SW
8959	4	15.058248	I-20 WB (Basic Analysis)	SW
8959	5	15.36323	I-20 WB (Basic Analysis)	SW
8959	6	16.368238	I-20 WB (Basic Analysis)	SW
8959	7	15.056384	I-20 WB (Basic Analysis)	SW
8959	8	15.502303	I-20 WB (Basic Analysis)	SW
8959	9	15.273805	I-20 WB (Basic Analysis)	SW
8959	10	16.285397	I-20 WB (Basic Analysis)	SW
8975	1	35.861184	I-26 EB (Weaving Analysis)	SE
8975	2	35.067941	I-26 EB (Weaving Analysis)	SE
8975	3	35.375467	I-26 EB (Weaving Analysis)	SE
8975	4	36.960515	I-26 EB (Weaving Analysis)	SE
8975	5	34.984594	I-26 EB (Weaving Analysis)	SE
8975	6	36.934649	I-26 EB (Weaving Analysis)	SE
8975	7	35.588148	I-26 EB (Weaving Analysis)	SE
8975	8	33.704196	I-26 EB (Weaving Analysis)	SE
8975	9	36.492042	I-26 EB (Weaving Analysis)	SE
8975	10	35.899984	I-26 EB (Weaving Analysis)	SE
8986	1	73.182952	I-26 EB (Basic Analysis)	SE
8986	2	74.398582	I-26 EB (Basic Analysis)	SE
8986	3	74.919042	I-26 EB (Basic Analysis)	SE
8986	4	74.858113	I-26 EB (Basic Analysis)	SE
8986	5	71.323538	I-26 EB (Basic Analysis)	SE
8986	6	74.28113	I-26 EB (Basic Analysis)	SE
8986	7	72.113404	I-26 EB (Basic Analysis)	SE
8986	8	72.178737	I-26 EB (Basic Analysis)	SE
8986	9	71.224438	I-26 EB (Basic Analysis)	SE
8986	10	71.269951	I-26 EB (Basic Analysis)	SE
8994	1	32.160905	I-126 SB (Basic Analysis)	SE
8994	2	30.433887	I-126 SB (Basic Analysis)	SE
8994	3	31.239829	I-126 SB (Basic Analysis)	SE
8994	4	31.217442	I-126 SB (Basic Analysis)	SE
8994	5	30.142853	I-126 SB (Basic Analysis)	SE
8994	6	31.374152	I-126 SB (Basic Analysis)	SE
8994	7	30.724922	I-126 SB (Basic Analysis)	SE
8994	8	30.190826	I-126 SB (Basic Analysis)	SE
8994	9	30.533031	I-126 SB (Basic Analysis)	SE
8994	10	29.832629	I-126 SB (Basic Analysis)	SE
8996	1	11.618618	CD ROAD I-20 WB TO I-20 (Basic Analysis)	NE
8996	2	11.879385	CD ROAD I-20 WB TO I-20 (Basic Analysis)	NE
8996	3	12.625468	CD ROAD I-20 WB TO I-20 (Basic Analysis)	NE
8996	4	10.691446	CD ROAD I-20 WB TO I-20 (Basic Analysis)	NE
8996	5	12.668929	CD ROAD I-20 WB TO I-20 (Basic Analysis)	NE
8996	6	10.264078	CD ROAD I-20 WB TO I-20 (Basic Analysis)	NE
8996	7	11.33612	CD ROAD I-20 WB TO I-20 (Basic Analysis)	NE
8996	8	11.155032	CD ROAD I-20 WB TO I-20 (Basic Analysis)	NE
8996	9	10.778368	CD ROAD I-20 WB TO I-20 (Basic Analysis)	NE
8996	10	12.09669	CD ROAD I-20 WB TO I-20 (Basic Analysis)	NE

RPA AM

ID	Run	Density	Name (Type)	Direction
9001	1	6.364619	I-126 NB (Merge Analysis)	NW
9001	2	6.671309	I-126 NB (Merge Analysis)	NW
9001	3	6.740868	I-126 NB (Merge Analysis)	NW
9001	4	5.997855	I-126 NB (Merge Analysis)	NW
9001	5	5.220062	I-126 NB (Merge Analysis)	NW
9001	6	6.744029	I-126 NB (Merge Analysis)	NW
9001	7	6.791456	I-126 NB (Merge Analysis)	NW
9001	8	5.561532	I-126 NB (Merge Analysis)	NW
9001	9	6.054766	I-126 NB (Merge Analysis)	NW
9001	10	5.729105	I-126 NB (Merge Analysis)	NW
9005	1	11.983149	I-126 NB (Basic Analysis)	NW
9005	2	11.962613	I-126 NB (Basic Analysis)	NW
9005	3	12.113215	I-126 NB (Basic Analysis)	NW
9005	4	11.07269	I-126 NB (Basic Analysis)	NW
9005	5	11.425236	I-126 NB (Basic Analysis)	NW
9005	6	10.223841	I-126 NB (Basic Analysis)	NW
9005	7	11.480001	I-126 NB (Basic Analysis)	NW
9005	8	11.260943	I-126 NB (Basic Analysis)	NW
9005	9	12.08241	I-126 NB (Basic Analysis)	NW
9005	10	12.410997	I-126 NB (Basic Analysis)	NW
9012	1	33.963609	I-126 SB (Merge Analysis)	E
9012	2	37.422434	I-126 SB (Merge Analysis)	E
9012	3	32.823264	I-126 SB (Merge Analysis)	E
9012	4	33.968055	I-126 SB (Merge Analysis)	E
9012	5	31.480636	I-126 SB (Merge Analysis)	E
9012	6	31.158316	I-126 SB (Merge Analysis)	E
9012	7	33.589052	I-126 SB (Merge Analysis)	E
9012	8	32.585415	I-126 SB (Merge Analysis)	E
9012	9	33.422335	I-126 SB (Merge Analysis)	E
9012	10	31.412838	I-126 SB (Merge Analysis)	E
9017	1	40.705605	I-126 SB (Basic Analysis)	E
9017	2	40.420623	I-126 SB (Basic Analysis)	E
9017	3	37.564961	I-126 SB (Basic Analysis)	E
9017	4	42.146589	I-126 SB (Basic Analysis)	E
9017	5	37.129451	I-126 SB (Basic Analysis)	E
9017	6	36.746552	I-126 SB (Basic Analysis)	E
9017	7	39.722053	I-126 SB (Basic Analysis)	E
9017	8	37.744719	I-126 SB (Basic Analysis)	E
9017	9	39.030789	I-126 SB (Basic Analysis)	E
9017	10	37.154295	I-126 SB (Basic Analysis)	E
9018	1	40.705605	I-126 SB (Basic Analysis)	E
9018	2	40.420623	I-126 SB (Basic Analysis)	E
9018	3	37.564961	I-126 SB (Basic Analysis)	E
9018	4	42.146589	I-126 SB (Basic Analysis)	E
9018	5	37.129451	I-126 SB (Basic Analysis)	E
9018	6	36.746552	I-126 SB (Basic Analysis)	E
9018	7	39.722053	I-126 SB (Basic Analysis)	E
9018	8	37.744719	I-126 SB (Basic Analysis)	E
9018	9	39.030789	I-126 SB (Basic Analysis)	E
9018	10	37.154295	I-126 SB (Basic Analysis)	E
9019	1	10.279993	I-126 NB (Diverge Analysis)	NW
9019	2	9.999744	I-126 NB (Diverge Analysis)	NW
9019	3	10.509974	I-126 NB (Diverge Analysis)	NW
9019	4	9.98592	I-126 NB (Diverge Analysis)	NW
9019	5	9.890409	I-126 NB (Diverge Analysis)	NW
9019	6	10.542648	I-126 NB (Diverge Analysis)	NW
9019	7	9.75217	I-126 NB (Diverge Analysis)	NW

RPA AM

ID	Run	Density	Name (Type)	Direction
9019	8	10.556472	I-126 NB (Diverge Analysis)	NW
9019	9	9.587539	I-126 NB (Diverge Analysis)	NW
9019	10	9.936908	I-126 NB (Diverge Analysis)	NW
9022	1	4.793579	107 (Basic Analysis)	NW
9022	2	4.670989	107 (Basic Analysis)	NW
9022	3	5.321658	107 (Basic Analysis)	NW
9022	4	4.435239	107 (Basic Analysis)	NW
9022	5	4.328366	107 (Basic Analysis)	NW
9022	6	6.412394	107 (Basic Analysis)	NW
9022	7	4.913025	107 (Basic Analysis)	NW
9022	8	5.780584	107 (Basic Analysis)	NW
9022	9	4.941315	107 (Basic Analysis)	NW
9022	10	5.768011	107 (Basic Analysis)	NW
9023	1	12.411951	I-126 NB (Basic Analysis)	NW
9023	2	13.315438	I-126 NB (Basic Analysis)	NW
9023	3	11.794399	I-126 NB (Basic Analysis)	NW
9023	4	11.430635	I-126 NB (Basic Analysis)	NW
9023	5	13.024427	I-126 NB (Basic Analysis)	NW
9023	6	13.949909	I-126 NB (Basic Analysis)	NW
9023	7	11.958515	I-126 NB (Basic Analysis)	NW
9023	8	13.215615	I-126 NB (Basic Analysis)	NW
9023	9	11.853616	I-126 NB (Basic Analysis)	NW
9023	10	12.689426	I-126 NB (Basic Analysis)	NW
9025	1	22.206737	CD ROAD I-26 WB TO I-20 (Diverge Analysis)	NE
9025	2	21.961669	CD ROAD I-26 WB TO I-20 (Diverge Analysis)	NE
9025	3	21.223912	CD ROAD I-26 WB TO I-20 (Diverge Analysis)	NE
9025	4	23.552058	CD ROAD I-26 WB TO I-20 (Diverge Analysis)	NE
9025	5	22.260346	CD ROAD I-26 WB TO I-20 (Diverge Analysis)	NE
9025	6	20.766962	CD ROAD I-26 WB TO I-20 (Diverge Analysis)	NE
9025	7	23.368257	CD ROAD I-26 WB TO I-20 (Diverge Analysis)	NE
9025	8	22.967469	CD ROAD I-26 WB TO I-20 (Diverge Analysis)	NE
9025	9	23.52653	CD ROAD I-26 WB TO I-20 (Diverge Analysis)	NE
9025	10	23.426971	CD ROAD I-26 WB TO I-20 (Diverge Analysis)	NE
9033	1	28.293626	I-26 WB (Basic Analysis)	NW
9033	2	27.787719	I-26 WB (Basic Analysis)	NW
9033	3	27.835412	I-26 WB (Basic Analysis)	NW
9033	4	26.653659	I-26 WB (Basic Analysis)	NW
9033	5	27.683122	I-26 WB (Basic Analysis)	NW
9033	6	27.287443	I-26 WB (Basic Analysis)	NW
9033	7	26.633129	I-26 WB (Basic Analysis)	NW
9033	8	27.417191	I-26 WB (Basic Analysis)	NW
9033	9	27.412658	I-26 WB (Basic Analysis)	NW
9033	10	27.653471	I-26 WB (Basic Analysis)	NW
9039	1	56.628549	I-20 EB (Basic Analysis)	NE
9039	2	57.493605	I-20 EB (Basic Analysis)	NE
9039	3	56.630433	I-20 EB (Basic Analysis)	NE
9039	4	58.540352	I-20 EB (Basic Analysis)	NE
9039	5	58.210903	I-20 EB (Basic Analysis)	NE
9039	6	56.449472	I-20 EB (Basic Analysis)	NE
9039	7	56.53323	I-20 EB (Basic Analysis)	NE
9039	8	56.564499	I-20 EB (Basic Analysis)	NE
9039	9	56.99883	I-20 EB (Basic Analysis)	NE
9039	10	56.641015	I-20 EB (Basic Analysis)	NE
9040	1	36.867171	I-20 WB (Basic Analysis)	SW
9040	2	35.051371	I-20 WB (Basic Analysis)	SW
9040	3	38.062191	I-20 WB (Basic Analysis)	SW
9040	4	34.770279	I-20 WB (Basic Analysis)	SW

RPA AM

ID	Run	Density	Name (Type)	Direction
9040	5	35.004311	I-20 WB (Basic Analysis)	SW
9040	6	35.962388	I-20 WB (Basic Analysis)	SW
9040	7	36.876816	I-20 WB (Basic Analysis)	SW
9040	8	37.862518	I-20 WB (Basic Analysis)	SW
9040	9	38.162918	I-20 WB (Basic Analysis)	SW
9040	10	36.608717	I-20 WB (Basic Analysis)	SW
9042	1	9.355259	I-20 WB (Basic Analysis)	W
9042	2	9.713301	I-20 WB (Basic Analysis)	W
9042	3	10.249421	I-20 WB (Basic Analysis)	W
9042	4	8.859653	I-20 WB (Basic Analysis)	W
9042	5	9.556893	I-20 WB (Basic Analysis)	W
9042	6	9.576679	I-20 WB (Basic Analysis)	W
9042	7	10.352123	I-20 WB (Basic Analysis)	W
9042	8	8.772027	I-20 WB (Basic Analysis)	W
9042	9	10.211733	I-20 WB (Basic Analysis)	W
9042	10	10.4275	I-20 WB (Basic Analysis)	W
9043	1	26.676646	CD ROAD I-20 WB (Basic Analysis)	W
9043	2	25.459949	CD ROAD I-20 WB (Basic Analysis)	W
9043	3	25.365485	CD ROAD I-20 WB (Basic Analysis)	W
9043	4	23.691582	CD ROAD I-20 WB (Basic Analysis)	W
9043	5	23.504544	CD ROAD I-20 WB (Basic Analysis)	W
9043	6	24.912058	CD ROAD I-20 WB (Basic Analysis)	W
9043	7	24.963068	CD ROAD I-20 WB (Basic Analysis)	W
9043	8	26.446154	CD ROAD I-20 WB (Basic Analysis)	W
9043	9	25.121768	CD ROAD I-20 WB (Basic Analysis)	W
9043	10	24.929061	CD ROAD I-20 WB (Basic Analysis)	W
9045	1	53.113719	CD ROAD I-20 EB (Weaving Analysis)	E
9045	2	66.819488	CD ROAD I-20 EB (Weaving Analysis)	E
9045	3	60.884318	CD ROAD I-20 EB (Weaving Analysis)	E
9045	4	57.800551	CD ROAD I-20 EB (Weaving Analysis)	E
9045	5	61.681524	CD ROAD I-20 EB (Weaving Analysis)	E
9045	6	56.993457	CD ROAD I-20 EB (Weaving Analysis)	E
9045	7	61.098142	CD ROAD I-20 EB (Weaving Analysis)	E
9045	8	50.167145	CD ROAD I-20 EB (Weaving Analysis)	E
9045	9	50.382206	CD ROAD I-20 EB (Weaving Analysis)	E
9045	10	60.109359	CD ROAD I-20 EB (Weaving Analysis)	E
9052	1	29.952384	CD ROAD I-20 EB (Basic Analysis)	NE
9052	2	31.138838	CD ROAD I-20 EB (Basic Analysis)	NE
9052	3	29.379677	CD ROAD I-20 EB (Basic Analysis)	NE
9052	4	29.049484	CD ROAD I-20 EB (Basic Analysis)	NE
9052	5	29.911343	CD ROAD I-20 EB (Basic Analysis)	NE
9052	6	29.094256	CD ROAD I-20 EB (Basic Analysis)	NE
9052	7	29.926267	CD ROAD I-20 EB (Basic Analysis)	NE
9052	8	30.63702	CD ROAD I-20 EB (Basic Analysis)	NE
9052	9	29.793817	CD ROAD I-20 EB (Basic Analysis)	NE
9052	10	30.012079	CD ROAD I-20 EB (Basic Analysis)	NE
9054	1	9.166049	I-20 WB (Basic Analysis)	SW
9054	2	9.717536	I-20 WB (Basic Analysis)	SW
9054	3	9.546412	I-20 WB (Basic Analysis)	SW
9054	4	9.008147	I-20 WB (Basic Analysis)	SW
9054	5	9.033816	I-20 WB (Basic Analysis)	SW
9054	6	9.405623	I-20 WB (Basic Analysis)	SW
9054	7	9.400956	I-20 WB (Basic Analysis)	SW
9054	8	9.38851	I-20 WB (Basic Analysis)	SW
9054	9	9.331728	I-20 WB (Basic Analysis)	SW
9054	10	9.747094	I-20 WB (Basic Analysis)	SW
9055	1	9.166049	I-20 WB (Basic Analysis)	SW

RPA AM

ID	Run	Density	Name (Type)	Direction
9055	2	9.717536	I-20 WB (Basic Analysis)	SW
9055	3	9.546412	I-20 WB (Basic Analysis)	SW
9055	4	9.008147	I-20 WB (Basic Analysis)	SW
9055	5	9.033816	I-20 WB (Basic Analysis)	SW
9055	6	9.405623	I-20 WB (Basic Analysis)	SW
9055	7	9.400956	I-20 WB (Basic Analysis)	SW
9055	8	9.38851	I-20 WB (Basic Analysis)	SW
9055	9	9.331728	I-20 WB (Basic Analysis)	SW
9055	10	9.747094	I-20 WB (Basic Analysis)	SW
9059	1	10.78486	I-20 WB (Merge Analysis)	SW
9059	2	10.39179	I-20 WB (Merge Analysis)	SW
9059	3	11.486771	I-20 WB (Merge Analysis)	SW
9059	4	11.462205	I-20 WB (Merge Analysis)	SW
9059	5	9.984682	I-20 WB (Merge Analysis)	SW
9059	6	11.511338	I-20 WB (Merge Analysis)	SW
9059	7	12.729154	I-20 WB (Merge Analysis)	SW
9059	8	11.676287	I-20 WB (Merge Analysis)	SW
9059	9	12.290459	I-20 WB (Merge Analysis)	SW
9059	10	11.476243	I-20 WB (Merge Analysis)	SW
9061	1	31.130778	I-20 EB (Basic Analysis)	NE
9061	2	33.559032	I-20 EB (Basic Analysis)	NE
9061	3	30.760785	I-20 EB (Basic Analysis)	NE
9061	4	28.675294	I-20 EB (Basic Analysis)	NE
9061	5	31.156604	I-20 EB (Basic Analysis)	NE
9061	6	33.929025	I-20 EB (Basic Analysis)	NE
9061	7	31.77251	I-20 EB (Basic Analysis)	NE
9061	8	31.565056	I-20 EB (Basic Analysis)	NE
9061	9	29.561536	I-20 EB (Basic Analysis)	NE
9061	10	29.618242	I-20 EB (Basic Analysis)	NE
9063	1	25.500085	I-26 WB (Basic Analysis)	NW
9063	2	23.874939	I-26 WB (Basic Analysis)	NW
9063	3	24.810864	I-26 WB (Basic Analysis)	NW
9063	4	23.566283	I-26 WB (Basic Analysis)	NW
9063	5	24.046415	I-26 WB (Basic Analysis)	NW
9063	6	25.04208	I-26 WB (Basic Analysis)	NW
9063	7	23.083938	I-26 WB (Basic Analysis)	NW
9063	8	22.691204	I-26 WB (Basic Analysis)	NW
9063	9	24.348433	I-26 WB (Basic Analysis)	NW
9063	10	24.036458	I-26 WB (Basic Analysis)	NW
9064	1	25.599192	I-26 WB (Diverge Analysis)	NW
9064	2	27.318125	I-26 WB (Diverge Analysis)	NW
9064	3	27.306392	I-26 WB (Diverge Analysis)	NW
9064	4	24.848259	I-26 WB (Diverge Analysis)	NW
9064	5	24.428793	I-26 WB (Diverge Analysis)	NW
9064	6	25.613859	I-26 WB (Diverge Analysis)	NW
9064	7	25.763459	I-26 WB (Diverge Analysis)	NW
9064	8	27.291725	I-26 WB (Diverge Analysis)	NW
9064	9	27.561592	I-26 WB (Diverge Analysis)	NW
9064	10	26.960259	I-26 WB (Diverge Analysis)	NW
9067	1	20.131121	I-26 EB (Merge Analysis)	SW
9067	2	20.053784	I-26 EB (Merge Analysis)	SW
9067	3	20.951258	I-26 EB (Merge Analysis)	SW
9067	4	19.825369	I-26 EB (Merge Analysis)	SW
9067	5	19.550191	I-26 EB (Merge Analysis)	SW
9067	6	19.773211	I-26 EB (Merge Analysis)	SW
9067	7	20.066374	I-26 EB (Merge Analysis)	SW
9067	8	20.55378	I-26 EB (Merge Analysis)	SW

RPA AM

ID	Run	Density	Name (Type)	Direction
9067	9	20.929676	I-26 EB (Merge Analysis)	SW
9067	10	20.50342	I-26 EB (Merge Analysis)	SW
9089	1	25.656883	I-26 EB (Diverge Analysis)	SE
9089	2	25.424172	I-26 EB (Diverge Analysis)	SE
9089	3	26.259194	I-26 EB (Diverge Analysis)	SE
9089	4	24.260617	I-26 EB (Diverge Analysis)	SE
9089	5	23.441239	I-26 EB (Diverge Analysis)	SE
9089	6	24.596972	I-26 EB (Diverge Analysis)	SE
9089	7	22.70595	I-26 EB (Diverge Analysis)	SE
9089	8	22.54755	I-26 EB (Diverge Analysis)	SE
9089	9	24.108083	I-26 EB (Diverge Analysis)	SE
9089	10	23.959461	I-26 EB (Diverge Analysis)	SE
9110	1	20.131121	I-26 EB (Merge Analysis)	SW
9110	2	20.053784	I-26 EB (Merge Analysis)	SW
9110	3	20.951258	I-26 EB (Merge Analysis)	SW
9110	4	19.825369	I-26 EB (Merge Analysis)	SW
9110	5	19.550191	I-26 EB (Merge Analysis)	SW
9110	6	19.773211	I-26 EB (Merge Analysis)	SW
9110	7	20.066374	I-26 EB (Merge Analysis)	SW
9110	8	20.55378	I-26 EB (Merge Analysis)	SW
9110	9	20.929676	I-26 EB (Merge Analysis)	SW
9110	10	20.50342	I-26 EB (Merge Analysis)	SW
9111	1	38.457977	(Merge Analysis)	SE
9111	2	38.96553	(Merge Analysis)	SE
9111	3	38.525471	(Merge Analysis)	SE
9111	4	38.736051	(Merge Analysis)	SE
9111	5	38.710404	(Merge Analysis)	SE
9111	6	37.76954	(Merge Analysis)	SE
9111	7	38.2069	(Merge Analysis)	SE
9111	8	38.085411	(Merge Analysis)	SE
9111	9	37.387525	(Merge Analysis)	SE
9111	10	38.003068	(Merge Analysis)	SE
9112	1	17.443336	I-26 EB (Basic Analysis)	S
9112	2	17.28203	I-26 EB (Basic Analysis)	S
9112	3	16.932525	I-26 EB (Basic Analysis)	S
9112	4	17.901837	I-26 EB (Basic Analysis)	S
9112	5	17.098118	I-26 EB (Basic Analysis)	S
9112	6	17.55076	I-26 EB (Basic Analysis)	S
9112	7	17.090004	I-26 EB (Basic Analysis)	S
9112	8	17.336907	I-26 EB (Basic Analysis)	S
9112	9	16.242395	I-26 EB (Basic Analysis)	S
9112	10	16.808694	I-26 EB (Basic Analysis)	S
9113	1	6.364619	I-126 NB (Merge+Diverge Analysis)	NW
9113	2	6.671309	I-126 NB (Merge+Diverge Analysis)	NW
9113	3	6.740868	I-126 NB (Merge+Diverge Analysis)	NW
9113	4	5.997855	I-126 NB (Merge+Diverge Analysis)	NW
9113	5	5.220062	I-126 NB (Merge+Diverge Analysis)	NW
9113	6	6.744029	I-126 NB (Merge+Diverge Analysis)	NW
9113	7	6.791456	I-126 NB (Merge+Diverge Analysis)	NW
9113	8	5.561532	I-126 NB (Merge+Diverge Analysis)	NW
9113	9	6.054766	I-126 NB (Merge+Diverge Analysis)	NW
9113	10	5.729105	I-126 NB (Merge+Diverge Analysis)	NW
9114	1	10.279993	I-126 NB (Diverge Analysis)	NW
9114	2	9.999744	I-126 NB (Diverge Analysis)	NW
9114	3	10.509974	I-126 NB (Diverge Analysis)	NW
9114	4	9.98592	I-126 NB (Diverge Analysis)	NW
9114	5	9.890409	I-126 NB (Diverge Analysis)	NW

RPA AM

ID	Run	Density	Name (Type)	Direction
9114	6	10.542648	I-126 NB (Diverge Analysis)	NW
9114	7	9.75217	I-126 NB (Diverge Analysis)	NW
9114	8	10.556472	I-126 NB (Diverge Analysis)	NW
9114	9	9.587539	I-126 NB (Diverge Analysis)	NW
9114	10	9.936908	I-126 NB (Diverge Analysis)	NW
9115	1	20.131121	I-26 EB (Merge Analysis)	SW
9115	2	20.053784	I-26 EB (Merge Analysis)	SW
9115	3	20.951258	I-26 EB (Merge Analysis)	SW
9115	4	19.825369	I-26 EB (Merge Analysis)	SW
9115	5	19.550191	I-26 EB (Merge Analysis)	SW
9115	6	19.773211	I-26 EB (Merge Analysis)	SW
9115	7	20.066374	I-26 EB (Merge Analysis)	SW
9115	8	20.55378	I-26 EB (Merge Analysis)	SW
9115	9	20.929676	I-26 EB (Merge Analysis)	SW
9115	10	20.50342	I-26 EB (Merge Analysis)	SW
9118	1	28.240171	I-26 EB (Diverge Analysis)	SE
9118	2	28.036628	I-26 EB (Diverge Analysis)	SE
9118	3	26.614733	I-26 EB (Diverge Analysis)	SE
9118	4	30.179648	I-26 EB (Diverge Analysis)	SE
9118	5	24.899154	I-26 EB (Diverge Analysis)	SE
9118	6	26.745583	I-26 EB (Diverge Analysis)	SE
9118	7	28.275065	I-26 EB (Diverge Analysis)	SE
9118	8	25.818007	I-26 EB (Diverge Analysis)	SE
9118	9	29.135762	I-26 EB (Diverge Analysis)	SE
9118	10	25.24227	I-26 EB (Diverge Analysis)	SE
9119	1	21.798925	I-26 EB (Diverge Analysis)	SE
9119	2	24.609675	I-26 EB (Diverge Analysis)	SE
9119	3	24.615921	I-26 EB (Diverge Analysis)	SE
9119	4	22.167446	I-26 EB (Diverge Analysis)	SE
9119	5	23.895536	I-26 EB (Diverge Analysis)	SE
9119	6	23.129347	I-26 EB (Diverge Analysis)	SE
9119	7	23.608215	I-26 EB (Diverge Analysis)	SE
9119	8	22.854518	I-26 EB (Diverge Analysis)	SE
9119	9	23.152249	I-26 EB (Diverge Analysis)	SE
9119	10	24.085002	I-26 EB (Diverge Analysis)	SE
9120	1	29.401439	I-26 EB (Diverge Analysis)	SE
9120	2	30.671109	I-26 EB (Diverge Analysis)	SE
9120	3	29.643935	I-26 EB (Diverge Analysis)	SE
9120	4	30.069445	I-26 EB (Diverge Analysis)	SE
9120	5	29.717141	I-26 EB (Diverge Analysis)	SE
9120	6	29.518111	I-26 EB (Diverge Analysis)	SE
9120	7	29.12234	I-26 EB (Diverge Analysis)	SE
9120	8	29.785772	I-26 EB (Diverge Analysis)	SE
9120	9	29.433467	I-26 EB (Diverge Analysis)	SE
9120	10	28.273606	I-26 EB (Diverge Analysis)	SE
9121	1	41.947796	I-26 EB (Basic Analysis)	SE
9121	2	40.090777	I-26 EB (Basic Analysis)	SE
9121	3	43.179054	I-26 EB (Basic Analysis)	SE
9121	4	41.215348	I-26 EB (Basic Analysis)	SE
9121	5	39.90211	I-26 EB (Basic Analysis)	SE
9121	6	40.863382	I-26 EB (Basic Analysis)	SE
9121	7	42.631172	I-26 EB (Basic Analysis)	SE
9121	8	37.140236	I-26 EB (Basic Analysis)	SE
9121	9	42.544421	I-26 EB (Basic Analysis)	SE
9121	10	39.706194	I-26 EB (Basic Analysis)	SE
9122	1	33.61599	I-26 EB (Diverge Analysis)	SE
9122	2	33.46639	I-26 EB (Diverge Analysis)	SE

RPA AM

ID	Run	Density	Name (Type)	Direction
9122	3	33.926923	I-26 EB (Diverge Analysis)	SE
9122	4	33.469323	I-26 EB (Diverge Analysis)	SE
9122	5	33.29039	I-26 EB (Diverge Analysis)	SE
9122	6	32.228523	I-26 EB (Diverge Analysis)	SE
9122	7	34.041323	I-26 EB (Diverge Analysis)	SE
9122	8	32.14639	I-26 EB (Diverge Analysis)	SE
9122	9	33.076257	I-26 EB (Diverge Analysis)	SE
9122	10	33.59839	I-26 EB (Diverge Analysis)	SE
9123	1	35.278651	I-26 EB (Weaving Analysis)	SE
9123	2	36.724343	I-26 EB (Weaving Analysis)	SE
9123	3	35.288849	I-26 EB (Weaving Analysis)	SE
9123	4	34.946056	I-26 EB (Weaving Analysis)	SE
9123	5	36.236432	I-26 EB (Weaving Analysis)	SE
9123	6	37.105573	I-26 EB (Weaving Analysis)	SE
9123	7	35.632426	I-26 EB (Weaving Analysis)	SE
9123	8	33.084619	I-26 EB (Weaving Analysis)	SE
9123	9	38.382614	I-26 EB (Weaving Analysis)	SE
9123	10	34.521683	I-26 EB (Weaving Analysis)	SE
9125	1	28.003625	I-26 EB (Basic Analysis)	SE
9125	2	28.760074	I-26 EB (Basic Analysis)	SE
9125	3	28.503803	I-26 EB (Basic Analysis)	SE
9125	4	27.821059	I-26 EB (Basic Analysis)	SE
9125	5	27.457867	I-26 EB (Basic Analysis)	SE
9125	6	29.283284	I-26 EB (Basic Analysis)	SE
9125	7	27.112131	I-26 EB (Basic Analysis)	SE
9125	8	26.762031	I-26 EB (Basic Analysis)	SE
9125	9	27.439926	I-26 EB (Basic Analysis)	SE
9125	10	27.897432	I-26 EB (Basic Analysis)	SE
9126	1	28.003625	I-26 EB (Basic Analysis)	SE
9126	2	28.760074	I-26 EB (Basic Analysis)	SE
9126	3	28.503803	I-26 EB (Basic Analysis)	SE
9126	4	27.821059	I-26 EB (Basic Analysis)	SE
9126	5	27.457867	I-26 EB (Basic Analysis)	SE
9126	6	29.283284	I-26 EB (Basic Analysis)	SE
9126	7	27.112131	I-26 EB (Basic Analysis)	SE
9126	8	26.762031	I-26 EB (Basic Analysis)	SE
9126	9	27.439926	I-26 EB (Basic Analysis)	SE
9126	10	27.897432	I-26 EB (Basic Analysis)	SE
9127	1	74.424249	I-26 EB (Basic Analysis)	SE
9127	2	74.358389	I-26 EB (Basic Analysis)	SE
9127	3	77.546944	I-26 EB (Basic Analysis)	SE
9127	4	71.330467	I-26 EB (Basic Analysis)	SE
9127	5	68.556344	I-26 EB (Basic Analysis)	SE
9127	6	77.80235	I-26 EB (Basic Analysis)	SE
9127	7	69.208511	I-26 EB (Basic Analysis)	SE
9127	8	68.453538	I-26 EB (Basic Analysis)	SE
9127	9	66.003893	I-26 EB (Basic Analysis)	SE
9127	10	71.099156	I-26 EB (Basic Analysis)	SE
9128	1	21.522576	I-26 EB (Diverge Analysis)	SW
9128	2	21.517392	I-26 EB (Diverge Analysis)	SW
9128	3	22.777777	I-26 EB (Diverge Analysis)	SW
9128	4	21.586734	I-26 EB (Diverge Analysis)	SW
9128	5	21.159953	I-26 EB (Diverge Analysis)	SW
9128	6	21.369087	I-26 EB (Diverge Analysis)	SW
9128	7	21.65002	I-26 EB (Diverge Analysis)	SW
9128	8	22.104849	I-26 EB (Diverge Analysis)	SW
9128	9	21.801147	I-26 EB (Diverge Analysis)	SW

RPA AM

ID	Run	Density	Name (Type)	Direction
9128	10	21.936452	I-26 EB (Diverge Analysis)	SW
9130	1	38.457977	(Merge Analysis)	SE
9130	2	38.96553	(Merge Analysis)	SE
9130	3	38.525471	(Merge Analysis)	SE
9130	4	38.736051	(Merge Analysis)	SE
9130	5	38.710404	(Merge Analysis)	SE
9130	6	37.76954	(Merge Analysis)	SE
9130	7	38.2069	(Merge Analysis)	SE
9130	8	38.085411	(Merge Analysis)	SE
9130	9	37.387525	(Merge Analysis)	SE
9130	10	38.003068	(Merge Analysis)	SE
9131	1	30.926777	(Diverge Analysis)	SE
9131	2	29.53465	(Diverge Analysis)	SE
9131	3	29.065754	(Diverge Analysis)	SE
9131	4	28.803637	(Diverge Analysis)	SE
9131	5	29.051192	(Diverge Analysis)	SE
9131	6	30.312261	(Diverge Analysis)	SE
9131	7	27.609553	(Diverge Analysis)	SE
9131	8	28.547347	(Diverge Analysis)	SE
9131	9	30.530691	(Diverge Analysis)	SE
9131	10	27.894969	(Diverge Analysis)	SE
9132	1	34.613279	I-126 SB (Diverge Analysis)	E
9132	2	37.599272	I-126 SB (Diverge Analysis)	E
9132	3	33.413065	I-126 SB (Diverge Analysis)	E
9132	4	34.898306	I-126 SB (Diverge Analysis)	E
9132	5	32.478488	I-126 SB (Diverge Analysis)	E
9132	6	31.755257	I-126 SB (Diverge Analysis)	E
9132	7	34.217732	I-126 SB (Diverge Analysis)	E
9132	8	33.346171	I-126 SB (Diverge Analysis)	E
9132	9	34.176044	I-126 SB (Diverge Analysis)	E
9132	10	32.009261	I-126 SB (Diverge Analysis)	E
9133	1	15.272677	I-126 NB (Basic Analysis)	W
9133	2	15.744056	I-126 NB (Basic Analysis)	W
9133	3	15.580135	I-126 NB (Basic Analysis)	W
9133	4	14.970315	I-126 NB (Basic Analysis)	W
9133	5	14.870094	I-126 NB (Basic Analysis)	W
9133	6	14.777517	I-126 NB (Basic Analysis)	W
9133	7	15.152922	I-126 NB (Basic Analysis)	W
9133	8	15.495202	I-126 NB (Basic Analysis)	W
9133	9	15.949595	I-126 NB (Basic Analysis)	W
9133	10	15.915621	I-126 NB (Basic Analysis)	W
9134	1	16.802128	I-126 NB (Diverge Analysis)	W
9134	2	16.227195	I-126 NB (Diverge Analysis)	W
9134	3	15.526129	I-126 NB (Diverge Analysis)	W
9134	4	14.710662	I-126 NB (Diverge Analysis)	W
9134	5	16.285862	I-126 NB (Diverge Analysis)	W
9134	6	17.544261	I-126 NB (Diverge Analysis)	W
9134	7	15.989595	I-126 NB (Diverge Analysis)	W
9134	8	16.781595	I-126 NB (Diverge Analysis)	W
9134	9	14.167996	I-126 NB (Diverge Analysis)	W
9134	10	15.989595	I-126 NB (Diverge Analysis)	W
9135	1	15.511811	I-126 NB (Basic Analysis)	NW
9135	2	14.883175	I-126 NB (Basic Analysis)	NW
9135	3	14.114115	I-126 NB (Basic Analysis)	NW
9135	4	13.583448	I-126 NB (Basic Analysis)	NW
9135	5	13.402205	I-126 NB (Basic Analysis)	NW
9135	6	14.368836	I-126 NB (Basic Analysis)	NW

RPA AM

ID	Run	Density	Name (Type)	Direction
9135	7	14.50436	I-126 NB (Basic Analysis)	NW
9135	8	15.222802	I-126 NB (Basic Analysis)	NW
9135	9	14.236577	I-126 NB (Basic Analysis)	NW
9135	10	13.7353	I-126 NB (Basic Analysis)	NW
9136	1	15.511811	I-126 NB (Basic Analysis)	NW
9136	2	14.883175	I-126 NB (Basic Analysis)	NW
9136	3	14.114115	I-126 NB (Basic Analysis)	NW
9136	4	13.583448	I-126 NB (Basic Analysis)	NW
9136	5	13.402205	I-126 NB (Basic Analysis)	NW
9136	6	14.368836	I-126 NB (Basic Analysis)	NW
9136	7	14.50436	I-126 NB (Basic Analysis)	NW
9136	8	15.222802	I-126 NB (Basic Analysis)	NW
9136	9	14.236577	I-126 NB (Basic Analysis)	NW
9136	10	13.7353	I-126 NB (Basic Analysis)	NW
9137	1	63.563758	I-26 WB (Diverge Analysis)	N
9137	2	49.258758	I-26 WB (Diverge Analysis)	N
9137	3	32.47289	I-26 WB (Diverge Analysis)	N
9137	4	57.470859	I-26 WB (Diverge Analysis)	N
9137	5	32.043509	I-26 WB (Diverge Analysis)	N
9137	6	49.951307	I-26 WB (Diverge Analysis)	N
9137	7	32.957674	I-26 WB (Diverge Analysis)	N
9137	8	65.736825	I-26 WB (Diverge Analysis)	N
9137	9	57.750957	I-26 WB (Diverge Analysis)	N
9137	10	39.633854	I-26 WB (Diverge Analysis)	N
9138	1	16.636042	I-26 WB (Basic Analysis)	N
9138	2	17.282771	I-26 WB (Basic Analysis)	N
9138	3	16.665071	I-26 WB (Basic Analysis)	N
9138	4	17.160581	I-26 WB (Basic Analysis)	N
9138	5	17.305049	I-26 WB (Basic Analysis)	N
9138	6	16.803125	I-26 WB (Basic Analysis)	N
9138	7	17.020839	I-26 WB (Basic Analysis)	N
9138	8	16.642456	I-26 WB (Basic Analysis)	N
9138	9	17.291547	I-26 WB (Basic Analysis)	N
9138	10	17.362093	I-26 WB (Basic Analysis)	N
9139	1	16.636042	I-26 WB (Basic Analysis)	N
9139	2	17.282771	I-26 WB (Basic Analysis)	N
9139	3	16.665071	I-26 WB (Basic Analysis)	N
9139	4	17.160581	I-26 WB (Basic Analysis)	N
9139	5	17.305049	I-26 WB (Basic Analysis)	N
9139	6	16.803125	I-26 WB (Basic Analysis)	N
9139	7	17.020839	I-26 WB (Basic Analysis)	N
9139	8	16.642456	I-26 WB (Basic Analysis)	N
9139	9	17.291547	I-26 WB (Basic Analysis)	N
9139	10	17.362093	I-26 WB (Basic Analysis)	N
9140	1	15.236131	I-26 WB (Basic Analysis)	NW
9140	2	15.303813	I-26 WB (Basic Analysis)	NW
9140	3	15.063808	I-26 WB (Basic Analysis)	NW
9140	4	15.212976	I-26 WB (Basic Analysis)	NW
9140	5	14.993008	I-26 WB (Basic Analysis)	NW
9140	6	14.707139	I-26 WB (Basic Analysis)	NW
9140	7	15.041098	I-26 WB (Basic Analysis)	NW
9140	8	14.59003	I-26 WB (Basic Analysis)	NW
9140	9	15.470793	I-26 WB (Basic Analysis)	NW
9140	10	15.460107	I-26 WB (Basic Analysis)	NW
9141	1	15.236131	I-26 WB (Basic Analysis)	NW
9141	2	15.303813	I-26 WB (Basic Analysis)	NW
9141	3	15.063808	I-26 WB (Basic Analysis)	NW

ID	Run	Density	Name (Type)	Direction
9141	4	15.212976	I-26 WB (Basic Analysis)	NW
9141	5	14.993008	I-26 WB (Basic Analysis)	NW
9141	6	14.707139	I-26 WB (Basic Analysis)	NW
9141	7	15.041098	I-26 WB (Basic Analysis)	NW
9141	8	14.59003	I-26 WB (Basic Analysis)	NW
9141	9	15.470793	I-26 WB (Basic Analysis)	NW
9141	10	15.460107	I-26 WB (Basic Analysis)	NW
9142	1	35.07253	I-26 WB (Basic Analysis)	NW
9142	2	33.897541	I-26 WB (Basic Analysis)	NW
9142	3	36.379589	I-26 WB (Basic Analysis)	NW
9142	4	35.509392	I-26 WB (Basic Analysis)	NW
9142	5	30.45493	I-26 WB (Basic Analysis)	NW
9142	6	37.360375	I-26 WB (Basic Analysis)	NW
9142	7	36.733467	I-26 WB (Basic Analysis)	NW
9142	8	35.760714	I-26 WB (Basic Analysis)	NW
9142	9	37.768851	I-26 WB (Basic Analysis)	NW
9142	10	35.783178	I-26 WB (Basic Analysis)	NW
9143	1	28.293626	I-26 WB (Basic Analysis)	NW
9143	2	27.787719	I-26 WB (Basic Analysis)	NW
9143	3	27.835412	I-26 WB (Basic Analysis)	NW
9143	4	26.653659	I-26 WB (Basic Analysis)	NW
9143	5	27.683122	I-26 WB (Basic Analysis)	NW
9143	6	27.287443	I-26 WB (Basic Analysis)	NW
9143	7	26.633129	I-26 WB (Basic Analysis)	NW
9143	8	27.417191	I-26 WB (Basic Analysis)	NW
9143	9	27.412658	I-26 WB (Basic Analysis)	NW
9143	10	27.653471	I-26 WB (Basic Analysis)	NW
9147	1	23.126665	I-26 WB (Basic Analysis)	NW
9147	2	24.614065	I-26 WB (Basic Analysis)	NW
9147	3	23.829438	I-26 WB (Basic Analysis)	NW
9147	4	20.41676	I-26 WB (Basic Analysis)	NW
9147	5	22.840241	I-26 WB (Basic Analysis)	NW
9147	6	25.042357	I-26 WB (Basic Analysis)	NW
9147	7	20.993183	I-26 WB (Basic Analysis)	NW
9147	8	21.458962	I-26 WB (Basic Analysis)	NW
9147	9	22.660038	I-26 WB (Basic Analysis)	NW
9147	10	21.226932	I-26 WB (Basic Analysis)	NW
9148	1	23.278926	I-26 WB (Diverge Analysis)	NW
9148	2	22.319727	I-26 WB (Diverge Analysis)	NW
9148	3	25.508259	I-26 WB (Diverge Analysis)	NW
9148	4	21.99706	I-26 WB (Diverge Analysis)	NW
9148	5	23.724793	I-26 WB (Diverge Analysis)	NW
9148	6	25.299992	I-26 WB (Diverge Analysis)	NW
9148	7	24.505059	I-26 WB (Diverge Analysis)	NW
9148	8	23.31706	I-26 WB (Diverge Analysis)	NW
9148	9	24.601859	I-26 WB (Diverge Analysis)	NW
9148	10	24.243993	I-26 WB (Diverge Analysis)	NW
9149	1	15.584002	I-26 WB (Diverge Analysis)	NW
9149	2	14.910061	I-26 WB (Diverge Analysis)	NW
9149	3	17.527239	I-26 WB (Diverge Analysis)	NW
9149	4	14.376623	I-26 WB (Diverge Analysis)	NW
9149	5	15.322046	I-26 WB (Diverge Analysis)	NW
9149	6	16.75566	I-26 WB (Diverge Analysis)	NW
9149	7	16.36987	I-26 WB (Diverge Analysis)	NW
9149	8	15.207738	I-26 WB (Diverge Analysis)	NW
9149	9	14.852907	I-26 WB (Diverge Analysis)	NW
9149	10	16.13411	I-26 WB (Diverge Analysis)	NW

RPA AM

ID	Run	Density	Name (Type)	Direction
9151	1	39.847983	I-20 EB (Diverge Analysis)	NE
9151	2	47.40616	I-20 EB (Diverge Analysis)	NE
9151	3	40.078307	I-20 EB (Diverge Analysis)	NE
9151	4	40.211756	I-20 EB (Diverge Analysis)	NE
9151	5	44.634367	I-20 EB (Diverge Analysis)	NE
9151	6	38.798181	I-20 EB (Diverge Analysis)	NE
9151	7	44.372411	I-20 EB (Diverge Analysis)	NE
9151	8	39.707614	I-20 EB (Diverge Analysis)	NE
9151	9	36.909131	I-20 EB (Diverge Analysis)	NE
9151	10	42.391429	I-20 EB (Diverge Analysis)	NE
9152	1	31.130778	I-20 EB (Basic Analysis)	NE
9152	2	33.559032	I-20 EB (Basic Analysis)	NE
9152	3	30.760785	I-20 EB (Basic Analysis)	NE
9152	4	28.675294	I-20 EB (Basic Analysis)	NE
9152	5	31.156604	I-20 EB (Basic Analysis)	NE
9152	6	33.929025	I-20 EB (Basic Analysis)	NE
9152	7	31.77251	I-20 EB (Basic Analysis)	NE
9152	8	31.565056	I-20 EB (Basic Analysis)	NE
9152	9	29.561536	I-20 EB (Basic Analysis)	NE
9152	10	29.618242	I-20 EB (Basic Analysis)	NE
9153	1	31.130778	I-20 EB (Basic Analysis)	NE
9153	2	33.559032	I-20 EB (Basic Analysis)	NE
9153	3	30.760785	I-20 EB (Basic Analysis)	NE
9153	4	28.675294	I-20 EB (Basic Analysis)	NE
9153	5	31.156604	I-20 EB (Basic Analysis)	NE
9153	6	33.929025	I-20 EB (Basic Analysis)	NE
9153	7	31.77251	I-20 EB (Basic Analysis)	NE
9153	8	31.565056	I-20 EB (Basic Analysis)	NE
9153	9	29.561536	I-20 EB (Basic Analysis)	NE
9153	10	29.618242	I-20 EB (Basic Analysis)	NE
9155	1	56.628549	I-20 EB (Basic Analysis)	NE
9155	2	57.493605	I-20 EB (Basic Analysis)	NE
9155	3	56.630433	I-20 EB (Basic Analysis)	NE
9155	4	58.540352	I-20 EB (Basic Analysis)	NE
9155	5	58.210903	I-20 EB (Basic Analysis)	NE
9155	6	56.449472	I-20 EB (Basic Analysis)	NE
9155	7	56.53323	I-20 EB (Basic Analysis)	NE
9155	8	56.564499	I-20 EB (Basic Analysis)	NE
9155	9	56.99883	I-20 EB (Basic Analysis)	NE
9155	10	56.641015	I-20 EB (Basic Analysis)	NE
9156	1	36.899161	I-20 EB (Basic Analysis)	NE
9156	2	36.918195	I-20 EB (Basic Analysis)	NE
9156	3	37.118049	I-20 EB (Basic Analysis)	NE
9156	4	37.890275	I-20 EB (Basic Analysis)	NE
9156	5	36.29552	I-20 EB (Basic Analysis)	NE
9156	6	37.026053	I-20 EB (Basic Analysis)	NE
9156	7	37.428027	I-20 EB (Basic Analysis)	NE
9156	8	37.038289	I-20 EB (Basic Analysis)	NE
9156	9	37.96505	I-20 EB (Basic Analysis)	NE
9156	10	37.44706	I-20 EB (Basic Analysis)	NE
9157	1	41.662121	I-20 WB (Diverge Analysis)	SW
9157	2	42.322121	I-20 WB (Diverge Analysis)	SW
9157	3	42.615454	I-20 WB (Diverge Analysis)	SW
9157	4	39.902121	I-20 WB (Diverge Analysis)	SW
9157	5	40.353854	I-20 WB (Diverge Analysis)	SW
9157	6	40.142654	I-20 WB (Diverge Analysis)	SW
9157	7	41.447987	I-20 WB (Diverge Analysis)	SW

RPA AM

ID	Run	Density	Name (Type)	Direction
9157	8	43.680254	I-20 WB (Diverge Analysis)	SW
9157	9	42.392521	I-20 WB (Diverge Analysis)	SW
9157	10	43.152254	I-20 WB (Diverge Analysis)	SW
9158	1	36.867171	I-20 WB (Basic Analysis)	SW
9158	2	35.051371	I-20 WB (Basic Analysis)	SW
9158	3	38.062191	I-20 WB (Basic Analysis)	SW
9158	4	34.770279	I-20 WB (Basic Analysis)	SW
9158	5	35.004311	I-20 WB (Basic Analysis)	SW
9158	6	35.962388	I-20 WB (Basic Analysis)	SW
9158	7	36.876816	I-20 WB (Basic Analysis)	SW
9158	8	37.862518	I-20 WB (Basic Analysis)	SW
9158	9	38.162918	I-20 WB (Basic Analysis)	SW
9158	10	36.608717	I-20 WB (Basic Analysis)	SW
9159	1	11.575568	I-20 WB (Basic Analysis)	W
9159	2	10.951307	I-20 WB (Basic Analysis)	W
9159	3	10.633938	I-20 WB (Basic Analysis)	W
9159	4	10.944095	I-20 WB (Basic Analysis)	W
9159	5	9.594311	I-20 WB (Basic Analysis)	W
9159	6	10.519112	I-20 WB (Basic Analysis)	W
9159	7	11.995802	I-20 WB (Basic Analysis)	W
9159	8	11.23369	I-20 WB (Basic Analysis)	W
9159	9	11.598612	I-20 WB (Basic Analysis)	W
9159	10	12.077895	I-20 WB (Basic Analysis)	W
9160	1	12.784213	I-20 WB (Merge Analysis)	SW
9160	2	12.528107	I-20 WB (Merge Analysis)	SW
9160	3	12.886656	I-20 WB (Merge Analysis)	SW
9160	4	12.351846	I-20 WB (Merge Analysis)	SW
9160	5	12.639588	I-20 WB (Merge Analysis)	SW
9160	6	13.094553	I-20 WB (Merge Analysis)	SW
9160	7	12.482912	I-20 WB (Merge Analysis)	SW
9160	8	13.183437	I-20 WB (Merge Analysis)	SW
9160	9	12.65616	I-20 WB (Merge Analysis)	SW
9160	10	13.391335	I-20 WB (Merge Analysis)	SW
9162	1	10.644008	I-20 WB (Merge Analysis)	SW
9162	2	11.158176	I-20 WB (Merge Analysis)	SW
9162	3	11.250775	I-20 WB (Merge Analysis)	SW
9162	4	10.046989	I-20 WB (Merge Analysis)	SW
9162	5	10.94861	I-20 WB (Merge Analysis)	SW
9162	6	9.403669	I-20 WB (Merge Analysis)	SW
9162	7	10.166393	I-20 WB (Merge Analysis)	SW
9162	8	10.636698	I-20 WB (Merge Analysis)	SW
9162	9	10.190761	I-20 WB (Merge Analysis)	SW
9162	10	10.736607	I-20 WB (Merge Analysis)	SW
9163	1	14.163418	I-20 WB (Merge Analysis)	S
9163	2	12.383929	I-20 WB (Merge Analysis)	S
9163	3	12.997859	I-20 WB (Merge Analysis)	S
9163	4	11.990879	I-20 WB (Merge Analysis)	S
9163	5	13.068087	I-20 WB (Merge Analysis)	S
9163	6	12.936692	I-20 WB (Merge Analysis)	S
9163	7	13.535896	I-20 WB (Merge Analysis)	S
9163	8	12.006737	I-20 WB (Merge Analysis)	S
9163	9	12.488139	I-20 WB (Merge Analysis)	S
9163	10	14.072801	I-20 WB (Merge Analysis)	S
9182	1	13.745557	I-26 EB (Merge Analysis)	S
9182	2	13.555165	I-26 EB (Merge Analysis)	S
9182	3	13.601242	I-26 EB (Merge Analysis)	S
9182	4	14.075916	I-26 EB (Merge Analysis)	S

RPA AM

ID	Run	Density	Name (Type)	Direction
9182	5	13.627323	I-26 EB (Merge Analysis)	S
9182	6	14.158506	I-26 EB (Merge Analysis)	S
9182	7	13.935079	I-26 EB (Merge Analysis)	S
9182	8	14.143727	I-26 EB (Merge Analysis)	S
9182	9	14.209799	I-26 EB (Merge Analysis)	S
9182	10	14.231533	I-26 EB (Merge Analysis)	S
9183	1	18.334229	I-20 EB (Basic Analysis)	E
9183	2	19.607123	I-20 EB (Basic Analysis)	E
9183	3	18.910086	I-20 EB (Basic Analysis)	E
9183	4	18.59264	I-20 EB (Basic Analysis)	E
9183	5	19.775426	I-20 EB (Basic Analysis)	E
9183	6	19.287087	I-20 EB (Basic Analysis)	E
9183	7	19.92923	I-20 EB (Basic Analysis)	E
9183	8	19.16539	I-20 EB (Basic Analysis)	E
9183	9	18.643907	I-20 EB (Basic Analysis)	E
9183	10	19.322301	I-20 EB (Basic Analysis)	E
9185	1	24.477168	I-20 WB (Basic Analysis)	SW
9185	2	26.713577	I-20 WB (Basic Analysis)	SW
9185	3	29.664378	I-20 WB (Basic Analysis)	SW
9185	4	25.408746	I-20 WB (Basic Analysis)	SW
9185	5	26.892492	I-20 WB (Basic Analysis)	SW
9185	6	29.013325	I-20 WB (Basic Analysis)	SW
9185	7	25.708742	I-20 WB (Basic Analysis)	SW
9185	8	31.882463	I-20 WB (Basic Analysis)	SW
9185	9	26.880879	I-20 WB (Basic Analysis)	SW
9185	10	32.181649	I-20 WB (Basic Analysis)	SW
9186	1	24.477168	I-20 WB (Basic Analysis)	SW
9186	2	26.713577	I-20 WB (Basic Analysis)	SW
9186	3	29.664378	I-20 WB (Basic Analysis)	SW
9186	4	25.408746	I-20 WB (Basic Analysis)	SW
9186	5	26.892492	I-20 WB (Basic Analysis)	SW
9186	6	29.013325	I-20 WB (Basic Analysis)	SW
9186	7	25.708742	I-20 WB (Basic Analysis)	SW
9186	8	31.882463	I-20 WB (Basic Analysis)	SW
9186	9	26.880879	I-20 WB (Basic Analysis)	SW
9186	10	32.181649	I-20 WB (Basic Analysis)	SW
9204	1	39.09961	CD ROAD I-26 EB (Basic Analysis)	SE
9204	2	53.122754	CD ROAD I-26 EB (Basic Analysis)	SE
9204	3	46.691186	CD ROAD I-26 EB (Basic Analysis)	SE
9204	4	42.145879	CD ROAD I-26 EB (Basic Analysis)	SE
9204	5	43.983945	CD ROAD I-26 EB (Basic Analysis)	SE
9204	6	47.67171	CD ROAD I-26 EB (Basic Analysis)	SE
9204	7	46.327229	CD ROAD I-26 EB (Basic Analysis)	SE
9204	8	30.589001	CD ROAD I-26 EB (Basic Analysis)	SE
9204	9	45.31513	CD ROAD I-26 EB (Basic Analysis)	SE
9204	10	45.188825	CD ROAD I-26 EB (Basic Analysis)	SE
9206	1	17.443336	I-26 EB (Basic Analysis)	S
9206	2	17.28203	I-26 EB (Basic Analysis)	S
9206	3	16.932525	I-26 EB (Basic Analysis)	S
9206	4	17.901837	I-26 EB (Basic Analysis)	S
9206	5	17.098118	I-26 EB (Basic Analysis)	S
9206	6	17.55076	I-26 EB (Basic Analysis)	S
9206	7	17.090004	I-26 EB (Basic Analysis)	S
9206	8	17.336907	I-26 EB (Basic Analysis)	S
9206	9	16.242395	I-26 EB (Basic Analysis)	S
9206	10	16.808694	I-26 EB (Basic Analysis)	S
9207	1	17.443336	I-26 EB (Basic Analysis)	S

RPA AM

ID	Run	Density	Name (Type)	Direction
9207	2	17.28203	I-26 EB (Basic Analysis)	S
9207	3	16.932525	I-26 EB (Basic Analysis)	S
9207	4	17.901837	I-26 EB (Basic Analysis)	S
9207	5	17.098118	I-26 EB (Basic Analysis)	S
9207	6	17.55076	I-26 EB (Basic Analysis)	S
9207	7	17.090004	I-26 EB (Basic Analysis)	S
9207	8	17.336907	I-26 EB (Basic Analysis)	S
9207	9	16.242395	I-26 EB (Basic Analysis)	S
9207	10	16.808694	I-26 EB (Basic Analysis)	S
9208	1	35.514631	(Basic Analysis)	SE
9208	2	37.175361	(Basic Analysis)	SE
9208	3	36.86673	(Basic Analysis)	SE
9208	4	37.310081	(Basic Analysis)	SE
9208	5	36.967157	(Basic Analysis)	SE
9208	6	35.073729	(Basic Analysis)	SE
9208	7	36.976955	(Basic Analysis)	SE
9208	8	36.722212	(Basic Analysis)	SE
9208	9	35.762026	(Basic Analysis)	SE
9208	10	37.439902	(Basic Analysis)	SE
9211	1	17.96126	I-20 EB (Basic Analysis)	NE
9211	2	18.825502	I-20 EB (Basic Analysis)	NE
9211	3	18.367962	I-20 EB (Basic Analysis)	NE
9211	4	18.621445	I-20 EB (Basic Analysis)	NE
9211	5	18.949066	I-20 EB (Basic Analysis)	NE
9211	6	18.679344	I-20 EB (Basic Analysis)	NE
9211	7	19.187015	I-20 EB (Basic Analysis)	NE
9211	8	18.442101	I-20 EB (Basic Analysis)	NE
9211	9	18.525418	I-20 EB (Basic Analysis)	NE
9211	10	18.592496	I-20 EB (Basic Analysis)	NE
9225	1	31.130778	I-20 EB (Basic Analysis)	NE
9225	2	33.559032	I-20 EB (Basic Analysis)	NE
9225	3	30.760785	I-20 EB (Basic Analysis)	NE
9225	4	28.675294	I-20 EB (Basic Analysis)	NE
9225	5	31.156604	I-20 EB (Basic Analysis)	NE
9225	6	33.929025	I-20 EB (Basic Analysis)	NE
9225	7	31.77251	I-20 EB (Basic Analysis)	NE
9225	8	31.565056	I-20 EB (Basic Analysis)	NE
9225	9	29.561536	I-20 EB (Basic Analysis)	NE
9225	10	29.618242	I-20 EB (Basic Analysis)	NE
9243	1	36.867171	I-20 WB (Basic Analysis)	SW
9243	2	35.051371	I-20 WB (Basic Analysis)	SW
9243	3	38.062191	I-20 WB (Basic Analysis)	SW
9243	4	34.770279	I-20 WB (Basic Analysis)	SW
9243	5	35.004311	I-20 WB (Basic Analysis)	SW
9243	6	35.962388	I-20 WB (Basic Analysis)	SW
9243	7	36.876816	I-20 WB (Basic Analysis)	SW
9243	8	37.862518	I-20 WB (Basic Analysis)	SW
9243	9	38.162918	I-20 WB (Basic Analysis)	SW
9243	10	36.608717	I-20 WB (Basic Analysis)	SW
9245	1	11.409735	CD ROAD I-20 WB TO I-20 (Basic Analysis)	NW
9245	2	10.902528	CD ROAD I-20 WB TO I-20 (Basic Analysis)	NW
9245	3	12.095672	CD ROAD I-20 WB TO I-20 (Basic Analysis)	NW
9245	4	11.536939	CD ROAD I-20 WB TO I-20 (Basic Analysis)	NW
9245	5	10.991088	CD ROAD I-20 WB TO I-20 (Basic Analysis)	NW
9245	6	10.574052	CD ROAD I-20 WB TO I-20 (Basic Analysis)	NW
9245	7	10.689985	CD ROAD I-20 WB TO I-20 (Basic Analysis)	NW
9245	8	11.264819	CD ROAD I-20 WB TO I-20 (Basic Analysis)	NW

RPA AM

ID	Run	Density	Name (Type)	Direction
9245	9	11.179479	CD ROAD I-20 WB TO I-20 (Basic Analysis)	NW
9245	10	11.173039	CD ROAD I-20 WB TO I-20 (Basic Analysis)	NW
9246	1	6.465011	I-126 NB (Diverge Analysis)	NW
9246	2	6.80045	I-126 NB (Diverge Analysis)	NW
9246	3	6.856824	I-126 NB (Diverge Analysis)	NW
9246	4	6.102646	I-126 NB (Diverge Analysis)	NW
9246	5	5.380482	I-126 NB (Diverge Analysis)	NW
9246	6	6.853101	I-126 NB (Diverge Analysis)	NW
9246	7	6.931785	I-126 NB (Diverge Analysis)	NW
9246	8	5.725098	I-126 NB (Diverge Analysis)	NW
9246	9	6.127821	I-126 NB (Diverge Analysis)	NW
9246	10	5.879812	I-126 NB (Diverge Analysis)	NW
9248	1	16.585013	I-26 WB (Basic Analysis)	NW
9248	2	16.827869	I-26 WB (Basic Analysis)	NW
9248	3	16.868233	I-26 WB (Basic Analysis)	NW
9248	4	15.819777	I-26 WB (Basic Analysis)	NW
9248	5	17.015939	I-26 WB (Basic Analysis)	NW
9248	6	16.554567	I-26 WB (Basic Analysis)	NW
9248	7	16.119247	I-26 WB (Basic Analysis)	NW
9248	8	16.48356	I-26 WB (Basic Analysis)	NW
9248	9	17.036563	I-26 WB (Basic Analysis)	NW
9248	10	16.546768	I-26 WB (Basic Analysis)	NW
9249	1	28.042624	I-26 EB (Basic Analysis)	SE
9249	2	29.000495	I-26 EB (Basic Analysis)	SE
9249	3	28.376622	I-26 EB (Basic Analysis)	SE
9249	4	28.256211	I-26 EB (Basic Analysis)	SE
9249	5	28.517794	I-26 EB (Basic Analysis)	SE
9249	6	28.484506	I-26 EB (Basic Analysis)	SE
9249	7	28.48519	I-26 EB (Basic Analysis)	SE
9249	8	27.785845	I-26 EB (Basic Analysis)	SE
9249	9	28.264737	I-26 EB (Basic Analysis)	SE
9249	10	28.33844	I-26 EB (Basic Analysis)	SE

RPA AM

ID	Run	Density	Name (Type)	Direction
2806	1	20.364017	I-20 EB (Basic Analysis)	NE
2806	2	19.34068	I-20 EB (Basic Analysis)	NE
2806	3	20.036881	I-20 EB (Basic Analysis)	NE
2806	4	19.118964	I-20 EB (Basic Analysis)	NE
2806	5	19.147074	I-20 EB (Basic Analysis)	NE
2806	6	19.057025	I-20 EB (Basic Analysis)	NE
2806	7	19.793904	I-20 EB (Basic Analysis)	NE
2806	8	19.570878	I-20 EB (Basic Analysis)	NE
2806	9	19.025684	I-20 EB (Basic Analysis)	NE
2806	10	19.523985	I-20 EB (Basic Analysis)	NE
2807	1	20.364017	I-20 EB (Basic Analysis)	NE
2807	2	19.34068	I-20 EB (Basic Analysis)	NE
2807	3	20.036881	I-20 EB (Basic Analysis)	NE
2807	4	19.118964	I-20 EB (Basic Analysis)	NE
2807	5	19.147074	I-20 EB (Basic Analysis)	NE
2807	6	19.057025	I-20 EB (Basic Analysis)	NE
2807	7	19.793904	I-20 EB (Basic Analysis)	NE
2807	8	19.570878	I-20 EB (Basic Analysis)	NE
2807	9	19.025684	I-20 EB (Basic Analysis)	NE
2807	10	19.523985	I-20 EB (Basic Analysis)	NE
2808	1	20.271454	I-20 EB (Diverge Analysis)	NE
2808	2	19.339286	I-20 EB (Diverge Analysis)	NE
2808	3	19.73568	I-20 EB (Diverge Analysis)	NE
2808	4	18.391301	I-20 EB (Diverge Analysis)	NE
2808	5	18.975512	I-20 EB (Diverge Analysis)	NE
2808	6	18.516842	I-20 EB (Diverge Analysis)	NE
2808	7	19.139606	I-20 EB (Diverge Analysis)	NE
2808	8	19.689219	I-20 EB (Diverge Analysis)	NE
2808	9	18.761993	I-20 EB (Diverge Analysis)	NE
2808	10	19.657587	I-20 EB (Diverge Analysis)	NE
2813	1	19.32405	I-20 WB (Merge Analysis)	S
2813	2	19.52454	I-20 WB (Merge Analysis)	S
2813	3	18.7475	I-20 WB (Merge Analysis)	S
2813	4	19.233433	I-20 WB (Merge Analysis)	S
2813	5	20.024065	I-20 WB (Merge Analysis)	S
2813	6	19.267414	I-20 WB (Merge Analysis)	S
2813	7	18.746367	I-20 WB (Merge Analysis)	S
2813	8	20.227953	I-20 WB (Merge Analysis)	S
2813	9	18.713519	I-20 WB (Merge Analysis)	S
2813	10	19.868884	I-20 WB (Merge Analysis)	S
2814	1	23.236886	I-20 WB (Basic Analysis)	S
2814	2	23.782904	I-20 WB (Basic Analysis)	S
2814	3	23.296673	I-20 WB (Basic Analysis)	S
2814	4	23.429035	I-20 WB (Basic Analysis)	S
2814	5	24.485506	I-20 WB (Basic Analysis)	S
2814	6	23.842751	I-20 WB (Basic Analysis)	S
2814	7	23.305241	I-20 WB (Basic Analysis)	S
2814	8	23.957645	I-20 WB (Basic Analysis)	S
2814	9	23.247343	I-20 WB (Basic Analysis)	S
2814	10	24.357661	I-20 WB (Basic Analysis)	S
2822	1	14.918182	I-20 WB (Merge Analysis)	SW
2822	2	16.260867	I-20 WB (Merge Analysis)	SW
2822	3	16.584964	I-20 WB (Merge Analysis)	SW
2822	4	16.701931	I-20 WB (Merge Analysis)	SW
2822	5	16.03668	I-20 WB (Merge Analysis)	SW
2822	6	15.987944	I-20 WB (Merge Analysis)	SW
2822	7	16.333972	I-20 WB (Merge Analysis)	SW
2822	8	16.217004	I-20 WB (Merge Analysis)	SW
2822	9	15.641916	I-20 WB (Merge Analysis)	SW
2822	10	16.372961	I-20 WB (Merge Analysis)	SW
2823	1	206.486314	I-20 WB (Basic Analysis)	SW
2823	2	265.482401	I-20 WB (Basic Analysis)	SW
2823	3	250.733378	I-20 WB (Basic Analysis)	SW
2823	4	300.88006	I-20 WB (Basic Analysis)	SW

RPA AM

ID	Run	Density	Name (Type)	Direction
2823	5	206.486311	I-20 WB (Basic Analysis)	SW
2823	6	169.613756	I-20 WB (Basic Analysis)	SW
2823	7	200.586709	I-20 WB (Basic Analysis)	SW
2823	8	312.67927	I-20 WB (Basic Analysis)	SW
2823	9	175.513368	I-20 WB (Basic Analysis)	SW
2823	10	157.81454	I-20 WB (Basic Analysis)	SW
2826	1	19.142161	I-20 EB (Basic Analysis)	NE
2826	2	17.710256	I-20 EB (Basic Analysis)	NE
2826	3	19.188616	I-20 EB (Basic Analysis)	NE
2826	4	15.835663	I-20 EB (Basic Analysis)	NE
2826	5	17.103609	I-20 EB (Basic Analysis)	NE
2826	6	17.406933	I-20 EB (Basic Analysis)	NE
2826	7	18.759591	I-20 EB (Basic Analysis)	NE
2826	8	19.716016	I-20 EB (Basic Analysis)	NE
2826	9	18.939945	I-20 EB (Basic Analysis)	NE
2826	10	20.440166	I-20 EB (Basic Analysis)	NE
2829	1	22.736066	I-20 EB (Merge Analysis)	NE
2829	2	23.098058	I-20 EB (Merge Analysis)	NE
2829	3	22.341842	I-20 EB (Merge Analysis)	NE
2829	4	21.69224	I-20 EB (Merge Analysis)	NE
2829	5	23.586499	I-20 EB (Merge Analysis)	NE
2829	6	23.593937	I-20 EB (Merge Analysis)	NE
2829	7	24.025352	I-20 EB (Merge Analysis)	NE
2829	8	21.622817	I-20 EB (Merge Analysis)	NE
2829	9	19.822775	I-20 EB (Merge Analysis)	NE
2829	10	23.053429	I-20 EB (Merge Analysis)	NE
2830	1	26.814925	I-20 EB (Basic Analysis)	NE
2830	2	22.339189	I-20 EB (Basic Analysis)	NE
2830	3	27.038712	I-20 EB (Basic Analysis)	NE
2830	4	26.551647	I-20 EB (Basic Analysis)	NE
2830	5	26.735942	I-20 EB (Basic Analysis)	NE
2830	6	23.905697	I-20 EB (Basic Analysis)	NE
2830	7	25.459041	I-20 EB (Basic Analysis)	NE
2830	8	22.707779	I-20 EB (Basic Analysis)	NE
2830	9	23.497615	I-20 EB (Basic Analysis)	NE
2830	10	20.272452	I-20 EB (Basic Analysis)	NE
2831	1	22.681355	I-20 WB (Basic Analysis)	SW
2831	2	24.110984	I-20 WB (Basic Analysis)	SW
2831	3	22.385569	I-20 WB (Basic Analysis)	SW
2831	4	22.535703	I-20 WB (Basic Analysis)	SW
2831	5	23.882422	I-20 WB (Basic Analysis)	SW
2831	6	23.08918	I-20 WB (Basic Analysis)	SW
2831	7	23.172089	I-20 WB (Basic Analysis)	SW
2831	8	23.889145	I-20 WB (Basic Analysis)	SW
2831	9	22.94801	I-20 WB (Basic Analysis)	SW
2831	10	23.353594	I-20 WB (Basic Analysis)	SW
2837	1	133.556309	I-20 WB (Merge Analysis)	SW
2837	2	119.193278	I-20 WB (Merge Analysis)	SW
2837	3	120.174013	I-20 WB (Merge Analysis)	SW
2837	4	124.353063	I-20 WB (Merge Analysis)	SW
2837	5	104.333099	I-20 WB (Merge Analysis)	SW
2837	6	106.990576	I-20 WB (Merge Analysis)	SW
2837	7	132.10705	I-20 WB (Merge Analysis)	SW
2837	8	127.369087	I-20 WB (Merge Analysis)	SW
2837	9	121.923067	I-20 WB (Merge Analysis)	SW
2837	10	106.253895	I-20 WB (Merge Analysis)	SW
2838	1	132.36433	I-20 WB (Diverge Analysis)	SW
2838	2	121.540899	I-20 WB (Diverge Analysis)	SW
2838	3	125.712914	I-20 WB (Diverge Analysis)	SW
2838	4	129.641872	I-20 WB (Diverge Analysis)	SW
2838	5	115.30919	I-20 WB (Diverge Analysis)	SW
2838	6	120.823014	I-20 WB (Diverge Analysis)	SW
2838	7	130.918534	I-20 WB (Diverge Analysis)	SW
2838	8	127.976826	I-20 WB (Diverge Analysis)	SW

RPA AM

ID	Run	Density	Name (Type)	Direction
2838	9	123.970189	I-20 WB (Diverge Analysis)	SW
2838	10	118.517757	I-20 WB (Diverge Analysis)	SW
2839	1	132.36433	I-20 WB (Diverge Analysis)	SW
2839	2	121.540899	I-20 WB (Diverge Analysis)	SW
2839	3	125.712914	I-20 WB (Diverge Analysis)	SW
2839	4	129.641872	I-20 WB (Diverge Analysis)	SW
2839	5	115.30919	I-20 WB (Diverge Analysis)	SW
2839	6	120.823014	I-20 WB (Diverge Analysis)	SW
2839	7	130.918534	I-20 WB (Diverge Analysis)	SW
2839	8	127.976826	I-20 WB (Diverge Analysis)	SW
2839	9	123.970189	I-20 WB (Diverge Analysis)	SW
2839	10	118.517757	I-20 WB (Diverge Analysis)	SW
2840	1	132.36433	I-20 WB (Diverge Analysis)	SW
2840	2	121.540899	I-20 WB (Diverge Analysis)	SW
2840	3	125.712914	I-20 WB (Diverge Analysis)	SW
2840	4	129.641872	I-20 WB (Diverge Analysis)	SW
2840	5	115.30919	I-20 WB (Diverge Analysis)	SW
2840	6	120.823014	I-20 WB (Diverge Analysis)	SW
2840	7	130.918534	I-20 WB (Diverge Analysis)	SW
2840	8	127.976826	I-20 WB (Diverge Analysis)	SW
2840	9	123.970189	I-20 WB (Diverge Analysis)	SW
2840	10	118.517757	I-20 WB (Diverge Analysis)	SW
2843	1	16.754672	I-20 EB (Basic Analysis)	NE
2843	2	16.145784	I-20 EB (Basic Analysis)	NE
2843	3	16.558727	I-20 EB (Basic Analysis)	NE
2843	4	16.101429	I-20 EB (Basic Analysis)	NE
2843	5	15.866464	I-20 EB (Basic Analysis)	NE
2843	6	16.499214	I-20 EB (Basic Analysis)	NE
2843	7	16.573606	I-20 EB (Basic Analysis)	NE
2843	8	16.484336	I-20 EB (Basic Analysis)	NE
2843	9	16.097499	I-20 EB (Basic Analysis)	NE
2843	10	16.002615	I-20 EB (Basic Analysis)	NE
2848	1	11.911568	I-20 EB (Basic Analysis)	NE
2848	2	10.762776	I-20 EB (Basic Analysis)	NE
2848	3	10.786783	I-20 EB (Basic Analysis)	NE
2848	4	10.342658	I-20 EB (Basic Analysis)	NE
2848	5	10.860215	I-20 EB (Basic Analysis)	NE
2848	6	11.000019	I-20 EB (Basic Analysis)	NE
2848	7	11.164535	I-20 EB (Basic Analysis)	NE
2848	8	11.146883	I-20 EB (Basic Analysis)	NE
2848	9	10.968951	I-20 EB (Basic Analysis)	NE
2848	10	10.855272	I-20 EB (Basic Analysis)	NE
2852	1	111.860026	I-20 WB (Merge Analysis)	SW
2852	2	97.411191	I-20 WB (Merge Analysis)	SW
2852	3	93.526113	I-20 WB (Merge Analysis)	SW
2852	4	91.490572	I-20 WB (Merge Analysis)	SW
2852	5	64.526666	I-20 WB (Merge Analysis)	SW
2852	6	81.474304	I-20 WB (Merge Analysis)	SW
2852	7	107.301115	I-20 WB (Merge Analysis)	SW
2852	8	105.114662	I-20 WB (Merge Analysis)	SW
2852	9	95.273872	I-20 WB (Merge Analysis)	SW
2852	10	72.233648	I-20 WB (Merge Analysis)	SW
2863	1	11.570043	I-20 EB (Basic Analysis)	NE
2863	2	10.890838	I-20 EB (Basic Analysis)	NE
2863	3	12.877415	I-20 EB (Basic Analysis)	NE
2863	4	12.045094	I-20 EB (Basic Analysis)	NE
2863	5	11.585747	I-20 EB (Basic Analysis)	NE
2863	6	11.393371	I-20 EB (Basic Analysis)	NE
2863	7	11.083214	I-20 EB (Basic Analysis)	NE
2863	8	13.101199	I-20 EB (Basic Analysis)	NE
2863	9	11.42478	I-20 EB (Basic Analysis)	NE
2863	10	9.838659	I-20 EB (Basic Analysis)	NE
4563	1	14.237334	I-126 SB (Merge Analysis)	E
4563	2	14.577706	I-126 SB (Merge Analysis)	E

RPA AM

ID	Run	Density	Name (Type)	Direction
4563	3	13.722178	I-126 SB (Merge Analysis)	E
4563	4	14.485714	I-126 SB (Merge Analysis)	E
4563	5	15.218585	I-126 SB (Merge Analysis)	E
4563	6	13.700713	I-126 SB (Merge Analysis)	E
4563	7	13.930694	I-126 SB (Merge Analysis)	E
4563	8	14.657432	I-126 SB (Merge Analysis)	E
4563	9	14.237334	I-126 SB (Merge Analysis)	E
4563	10	12.397489	I-126 SB (Merge Analysis)	E
4566	1	30.862155	I-126 NB (Basic Analysis)	W
4566	2	31.702993	I-126 NB (Basic Analysis)	W
4566	3	31.28852	I-126 NB (Basic Analysis)	W
4566	4	30.291405	I-126 NB (Basic Analysis)	W
4566	5	30.569136	I-126 NB (Basic Analysis)	W
4566	6	31.015884	I-126 NB (Basic Analysis)	W
4566	7	31.032871	I-126 NB (Basic Analysis)	W
4566	8	31.043063	I-126 NB (Basic Analysis)	W
4566	9	31.013336	I-126 NB (Basic Analysis)	W
4566	10	30.757687	I-126 NB (Basic Analysis)	W
4570	1	29.432238	I-126 NB (Basic Analysis)	W
4570	2	29.204035	I-126 NB (Basic Analysis)	W
4570	3	28.88669	I-126 NB (Basic Analysis)	W
4570	4	28.818942	I-126 NB (Basic Analysis)	W
4570	5	27.945353	I-126 NB (Basic Analysis)	W
4570	6	29.2076	I-126 NB (Basic Analysis)	W
4570	7	29.157681	I-126 NB (Basic Analysis)	W
4570	8	28.360159	I-126 NB (Basic Analysis)	W
4570	9	28.51586	I-126 NB (Basic Analysis)	W
4570	10	29.920735	I-126 NB (Basic Analysis)	W
4573	1	14.874929	I-126 SB (Basic Analysis)	E
4573	2	13.560279	I-126 SB (Basic Analysis)	E
4573	3	14.262124	I-126 SB (Basic Analysis)	E
4573	4	15.189188	I-126 SB (Basic Analysis)	E
4573	5	13.40053	I-126 SB (Basic Analysis)	E
4573	6	15.00587	I-126 SB (Basic Analysis)	E
4573	7	15.458927	I-126 SB (Basic Analysis)	E
4573	8	14.56067	I-126 SB (Basic Analysis)	E
4573	9	14.429729	I-126 SB (Basic Analysis)	E
4573	10	14.542338	I-126 SB (Basic Analysis)	E
4579	1	13.602256	I-126 SB (Diverge Analysis)	E
4579	2	14.497577	I-126 SB (Diverge Analysis)	E
4579	3	13.597901	I-126 SB (Diverge Analysis)	E
4579	4	14.993949	I-126 SB (Diverge Analysis)	E
4579	5	13.983753	I-126 SB (Diverge Analysis)	E
4579	6	23.285896	I-126 SB (Diverge Analysis)	E
4579	7	15.335563	I-126 SB (Diverge Analysis)	E
4579	8	19.344132	I-126 SB (Diverge Analysis)	E
4579	9	14.119864	I-126 SB (Diverge Analysis)	E
4579	10	19.67362	I-126 SB (Diverge Analysis)	E
4589	1	28.277117	I-126 NB (Merge Analysis)	NW
4589	2	30.021148	I-126 NB (Merge Analysis)	NW
4589	3	27.622458	I-126 NB (Merge Analysis)	NW
4589	4	29.128432	I-126 NB (Merge Analysis)	NW
4589	5	29.413066	I-126 NB (Merge Analysis)	NW
4589	6	29.467405	I-126 NB (Merge Analysis)	NW
4589	7	27.480141	I-126 NB (Merge Analysis)	NW
4589	8	28.582452	I-126 NB (Merge Analysis)	NW
4589	9	28.872261	I-126 NB (Merge Analysis)	NW
4589	10	28.403909	I-126 NB (Merge Analysis)	NW
4599	1	22.856195	I-126 NB (Basic Analysis)	NW
4599	2	24.014296	I-126 NB (Basic Analysis)	NW
4599	3	22.849986	I-126 NB (Basic Analysis)	NW
4599	4	23.736414	I-126 NB (Basic Analysis)	NW
4599	5	23.480266	I-126 NB (Basic Analysis)	NW
4599	6	22.520874	I-126 NB (Basic Analysis)	NW

RPA AM

ID	Run	Density	Name (Type)	Direction
4599	7	22.317507	I-126 NB (Basic Analysis)	NW
4599	8	21.982186	I-126 NB (Basic Analysis)	NW
4599	9	23.089057	I-126 NB (Basic Analysis)	NW
4599	10	23.284661	I-126 NB (Basic Analysis)	NW
4601	1	24.07842	I-126 NB (Basic Analysis)	NW
4601	2	26.099451	I-126 NB (Basic Analysis)	NW
4601	3	26.633698	I-126 NB (Basic Analysis)	NW
4601	4	24.890146	I-126 NB (Basic Analysis)	NW
4601	5	26.898751	I-126 NB (Basic Analysis)	NW
4601	6	27.143097	I-126 NB (Basic Analysis)	NW
4601	7	25.436818	I-126 NB (Basic Analysis)	NW
4601	8	25.345706	I-126 NB (Basic Analysis)	NW
4601	9	25.097218	I-126 NB (Basic Analysis)	NW
4601	10	25.113784	I-126 NB (Basic Analysis)	NW
4604	1	16.34284	I-26 WB (Basic Analysis)	NW
4604	2	16.17149	I-26 WB (Basic Analysis)	NW
4604	3	15.745622	I-26 WB (Basic Analysis)	NW
4604	4	16.160018	I-26 WB (Basic Analysis)	NW
4604	5	16.823913	I-26 WB (Basic Analysis)	NW
4604	6	16.158584	I-26 WB (Basic Analysis)	NW
4604	7	16.585886	I-26 WB (Basic Analysis)	NW
4604	8	15.882559	I-26 WB (Basic Analysis)	NW
4604	9	16.564377	I-26 WB (Basic Analysis)	NW
4604	10	15.929878	I-26 WB (Basic Analysis)	NW
4610	1	13.681684	I-26 EB (Basic Analysis)	SE
4610	2	14.599958	I-26 EB (Basic Analysis)	SE
4610	3	13.828882	I-26 EB (Basic Analysis)	SE
4610	4	14.224262	I-26 EB (Basic Analysis)	SE
4610	5	13.739022	I-26 EB (Basic Analysis)	SE
4610	6	14.229396	I-26 EB (Basic Analysis)	SE
4610	7	13.8169	I-26 EB (Basic Analysis)	SE
4610	8	14.013735	I-26 EB (Basic Analysis)	SE
4610	9	13.621778	I-26 EB (Basic Analysis)	SE
4610	10	14.197732	I-26 EB (Basic Analysis)	SE
4646	1	34.320072	I-26 WB (Basic Analysis)	NW
4646	2	35.663897	I-26 WB (Basic Analysis)	NW
4646	3	34.420691	I-26 WB (Basic Analysis)	NW
4646	4	34.038339	I-26 WB (Basic Analysis)	NW
4646	5	34.288768	I-26 WB (Basic Analysis)	NW
4646	6	34.807516	I-26 WB (Basic Analysis)	NW
4646	7	35.098194	I-26 WB (Basic Analysis)	NW
4646	8	34.049518	I-26 WB (Basic Analysis)	NW
4646	9	35.024406	I-26 WB (Basic Analysis)	NW
4646	10	34.608514	I-26 WB (Basic Analysis)	NW
4651	1	34.228205	I-26 WB (Basic Analysis)	NW
4651	2	33.512391	I-26 WB (Basic Analysis)	NW
4651	3	33.016092	I-26 WB (Basic Analysis)	NW
4651	4	32.69977	I-26 WB (Basic Analysis)	NW
4651	5	34.918114	I-26 WB (Basic Analysis)	NW
4651	6	34.414998	I-26 WB (Basic Analysis)	NW
4651	7	32.924741	I-26 WB (Basic Analysis)	NW
4651	8	34.247293	I-26 WB (Basic Analysis)	NW
4651	9	34.094586	I-26 WB (Basic Analysis)	NW
4651	10	34.469537	I-26 WB (Basic Analysis)	NW
4654	1	38.927944	I-26 WB (Merge Analysis)	NW
4654	2	40.632532	I-26 WB (Merge Analysis)	NW
4654	3	40.914462	I-26 WB (Merge Analysis)	NW
4654	4	40.417832	I-26 WB (Merge Analysis)	NW
4654	5	39.392043	I-26 WB (Merge Analysis)	NW
4654	6	40.758317	I-26 WB (Merge Analysis)	NW
4654	7	40.302892	I-26 WB (Merge Analysis)	NW
4654	8	37.618057	I-26 WB (Merge Analysis)	NW
4654	9	39.882167	I-26 WB (Merge Analysis)	NW
4654	10	37.670105	I-26 WB (Merge Analysis)	NW

RPA AM

ID	Run	Density	Name (Type)	Direction
4677	1	45.422006	I-26 WB (Basic Analysis)	NW
4677	2	46.236181	I-26 WB (Basic Analysis)	NW
4677	3	45.366349	I-26 WB (Basic Analysis)	NW
4677	4	53.399701	I-26 WB (Basic Analysis)	NW
4677	5	46.89025	I-26 WB (Basic Analysis)	NW
4677	6	49.427061	I-26 WB (Basic Analysis)	NW
4677	7	45.989272	I-26 WB (Basic Analysis)	NW
4677	8	44.138725	I-26 WB (Basic Analysis)	NW
4677	9	46.319976	I-26 WB (Basic Analysis)	NW
4677	10	44.510196	I-26 WB (Basic Analysis)	NW
4687	1	26.456789	I-26 EB (Basic Analysis)	SE
4687	2	26.023478	I-26 EB (Basic Analysis)	SE
4687	3	26.028998	I-26 EB (Basic Analysis)	SE
4687	4	27.523046	I-26 EB (Basic Analysis)	SE
4687	5	25.632487	I-26 EB (Basic Analysis)	SE
4687	6	25.94988	I-26 EB (Basic Analysis)	SE
4687	7	26.502788	I-26 EB (Basic Analysis)	SE
4687	8	26.181715	I-26 EB (Basic Analysis)	SE
4687	9	26.095237	I-26 EB (Basic Analysis)	SE
4687	10	27.092495	I-26 EB (Basic Analysis)	SE
4701	1	34.195198	I-26 WB (Weaving Analysis)	NW
4701	2	34.662097	I-26 WB (Weaving Analysis)	NW
4701	3	35.535553	I-26 WB (Weaving Analysis)	NW
4701	4	32.892024	I-26 WB (Weaving Analysis)	NW
4701	5	34.473143	I-26 WB (Weaving Analysis)	NW
4701	6	33.831309	I-26 WB (Weaving Analysis)	NW
4701	7	36.001233	I-26 WB (Weaving Analysis)	NW
4701	8	33.856909	I-26 WB (Weaving Analysis)	NW
4701	9	33.895309	I-26 WB (Weaving Analysis)	NW
4701	10	34.595658	I-26 WB (Weaving Analysis)	NW
4712	1	32.521122	I-26 WB (Basic Analysis)	NW
4712	2	33.85445	I-26 WB (Basic Analysis)	NW
4712	3	34.635372	I-26 WB (Basic Analysis)	NW
4712	4	33.308654	I-26 WB (Basic Analysis)	NW
4712	5	33.648596	I-26 WB (Basic Analysis)	NW
4712	6	33.597605	I-26 WB (Basic Analysis)	NW
4712	7	34.865777	I-26 WB (Basic Analysis)	NW
4712	8	33.428578	I-26 WB (Basic Analysis)	NW
4712	9	33.488068	I-26 WB (Basic Analysis)	NW
4712	10	34.695807	I-26 WB (Basic Analysis)	NW
4714	1	23.321143	I-26 EB (Basic Analysis)	SE
4714	2	22.150166	I-26 EB (Basic Analysis)	SE
4714	3	22.449416	I-26 EB (Basic Analysis)	SE
4714	4	22.886905	I-26 EB (Basic Analysis)	SE
4714	5	22.124957	I-26 EB (Basic Analysis)	SE
4714	6	22.142034	I-26 EB (Basic Analysis)	SE
4714	7	22.043639	I-26 EB (Basic Analysis)	SE
4714	8	21.941179	I-26 EB (Basic Analysis)	SE
4714	9	22.500646	I-26 EB (Basic Analysis)	SE
4714	10	22.747852	I-26 EB (Basic Analysis)	SE
4720	1	19.621838	I-26 EB (Merge Analysis)	SE
4720	2	18.413497	I-26 EB (Merge Analysis)	SE
4720	3	18.931863	I-26 EB (Merge Analysis)	SE
4720	4	19.644837	I-26 EB (Merge Analysis)	SE
4720	5	18.954862	I-26 EB (Merge Analysis)	SE
4720	6	19.096395	I-26 EB (Merge Analysis)	SE
4720	7	18.00128	I-26 EB (Merge Analysis)	SE
4720	8	18.00305	I-26 EB (Merge Analysis)	SE
4720	9	18.749638	I-26 EB (Merge Analysis)	SE
4720	10	19.911982	I-26 EB (Merge Analysis)	SE
4725	1	37.198134	I-26 WB (Merge Analysis)	NW
4725	2	36.00321	I-26 WB (Merge Analysis)	NW
4725	3	40.091322	I-26 WB (Merge Analysis)	NW
4725	4	35.46986	I-26 WB (Merge Analysis)	NW

RPA AM

ID	Run	Density	Name (Type)	Direction
4725	5	38.13252	I-26 WB (Merge Analysis)	NW
4725	6	36.261019	I-26 WB (Merge Analysis)	NW
4725	7	43.191849	I-26 WB (Merge Analysis)	NW
4725	8	37.818785	I-26 WB (Merge Analysis)	NW
4725	9	37.933367	I-26 WB (Merge Analysis)	NW
4725	10	40.110419	I-26 WB (Merge Analysis)	NW
4727	1	40.911476	I-26 WB (Basic Analysis)	NW
4727	2	39.298155	I-26 WB (Basic Analysis)	NW
4727	3	43.881797	I-26 WB (Basic Analysis)	NW
4727	4	39.657076	I-26 WB (Basic Analysis)	NW
4727	5	42.070751	I-26 WB (Basic Analysis)	NW
4727	6	40.922482	I-26 WB (Basic Analysis)	NW
4727	7	47.336353	I-26 WB (Basic Analysis)	NW
4727	8	42.832021	I-26 WB (Basic Analysis)	NW
4727	9	40.94237	I-26 WB (Basic Analysis)	NW
4727	10	46.76004	I-26 WB (Basic Analysis)	NW
4728	1	30.857519	I-26 WB (Diverge Analysis)	NW
4728	2	30.955882	I-26 WB (Diverge Analysis)	NW
4728	3	32.206128	I-26 WB (Diverge Analysis)	NW
4728	4	31.046479	I-26 WB (Diverge Analysis)	NW
4728	5	32.28896	I-26 WB (Diverge Analysis)	NW
4728	6	30.508071	I-26 WB (Diverge Analysis)	NW
4728	7	33.345068	I-26 WB (Diverge Analysis)	NW
4728	8	31.766083	I-26 WB (Diverge Analysis)	NW
4728	9	32.938673	I-26 WB (Diverge Analysis)	NW
4728	10	32.244955	I-26 WB (Diverge Analysis)	NW
4729	1	30.857519	I-26 WB (Diverge Analysis)	NW
4729	2	30.955882	I-26 WB (Diverge Analysis)	NW
4729	3	32.206128	I-26 WB (Diverge Analysis)	NW
4729	4	31.046479	I-26 WB (Diverge Analysis)	NW
4729	5	32.28896	I-26 WB (Diverge Analysis)	NW
4729	6	30.508071	I-26 WB (Diverge Analysis)	NW
4729	7	33.345068	I-26 WB (Diverge Analysis)	NW
4729	8	31.766083	I-26 WB (Diverge Analysis)	NW
4729	9	32.938673	I-26 WB (Diverge Analysis)	NW
4729	10	32.244955	I-26 WB (Diverge Analysis)	NW
4730	1	30.857519	I-26 WB (Diverge Analysis)	NW
4730	2	30.955882	I-26 WB (Diverge Analysis)	NW
4730	3	32.206128	I-26 WB (Diverge Analysis)	NW
4730	4	31.046479	I-26 WB (Diverge Analysis)	NW
4730	5	32.28896	I-26 WB (Diverge Analysis)	NW
4730	6	30.508071	I-26 WB (Diverge Analysis)	NW
4730	7	33.345068	I-26 WB (Diverge Analysis)	NW
4730	8	31.766083	I-26 WB (Diverge Analysis)	NW
4730	9	32.938673	I-26 WB (Diverge Analysis)	NW
4730	10	32.244955	I-26 WB (Diverge Analysis)	NW
4732	1	31.939867	I-26 WB (Basic Analysis)	NW
4732	2	33.281323	I-26 WB (Basic Analysis)	NW
4732	3	32.62379	I-26 WB (Basic Analysis)	NW
4732	4	30.244353	I-26 WB (Basic Analysis)	NW
4732	5	32.234547	I-26 WB (Basic Analysis)	NW
4732	6	32.476449	I-26 WB (Basic Analysis)	NW
4732	7	31.280134	I-26 WB (Basic Analysis)	NW
4732	8	30.686374	I-26 WB (Basic Analysis)	NW
4732	9	31.937668	I-26 WB (Basic Analysis)	NW
4732	10	30.734755	I-26 WB (Basic Analysis)	NW
4733	1	20.365008	I-26 EB (Basic Analysis)	SE
4733	2	20.861071	I-26 EB (Basic Analysis)	SE
4733	3	21.765006	I-26 EB (Basic Analysis)	SE
4733	4	21.53351	I-26 EB (Basic Analysis)	SE
4733	5	20.534772	I-26 EB (Basic Analysis)	SE
4733	6	21.008787	I-26 EB (Basic Analysis)	SE
4733	7	19.99682	I-26 EB (Basic Analysis)	SE
4733	8	21.559967	I-26 EB (Basic Analysis)	SE

RPA AM

ID	Run	Density	Name (Type)	Direction
4733	9	20.616346	I-26 EB (Basic Analysis)	SE
4733	10	19.855718	I-26 EB (Basic Analysis)	SE
4736	1	22.686767	I-26 EB (Basic Analysis)	SE
4736	2	24.064041	I-26 EB (Basic Analysis)	SE
4736	3	20.837649	I-26 EB (Basic Analysis)	SE
4736	4	24.663411	I-26 EB (Basic Analysis)	SE
4736	5	27.800535	I-26 EB (Basic Analysis)	SE
4736	6	23.337147	I-26 EB (Basic Analysis)	SE
4736	7	27.915308	I-26 EB (Basic Analysis)	SE
4736	8	23.668713	I-26 EB (Basic Analysis)	SE
4736	9	20.824897	I-26 EB (Basic Analysis)	SE
4736	10	23.566692	I-26 EB (Basic Analysis)	SE
4737	1	16.542313	I-26 EB (Diverge Analysis)	SE
4737	2	18.738499	I-26 EB (Diverge Analysis)	SE
4737	3	16.674999	I-26 EB (Diverge Analysis)	SE
4737	4	16.681862	I-26 EB (Diverge Analysis)	SE
4737	5	18.260371	I-26 EB (Diverge Analysis)	SE
4737	6	17.013578	I-26 EB (Diverge Analysis)	SE
4737	7	18.045328	I-26 EB (Diverge Analysis)	SE
4737	8	17.754791	I-26 EB (Diverge Analysis)	SE
4737	9	17.789106	I-26 EB (Diverge Analysis)	SE
4737	10	15.757634	I-26 EB (Diverge Analysis)	SE
4739	1	29.324331	I-26 WB (Weaving Analysis)	NW
4739	2	29.028098	I-26 WB (Weaving Analysis)	NW
4739	3	29.402428	I-26 WB (Weaving Analysis)	NW
4739	4	28.519117	I-26 WB (Weaving Analysis)	NW
4739	5	30.078377	I-26 WB (Weaving Analysis)	NW
4739	6	28.884021	I-26 WB (Weaving Analysis)	NW
4739	7	28.733212	I-26 WB (Weaving Analysis)	NW
4739	8	28.87325	I-26 WB (Weaving Analysis)	NW
4739	9	27.941463	I-26 WB (Weaving Analysis)	NW
4739	10	30.171287	I-26 WB (Weaving Analysis)	NW
4741	1	40.516285	I-26 WB (Basic Analysis)	NW
4741	2	37.06332	I-26 WB (Basic Analysis)	NW
4741	3	39.260662	I-26 WB (Basic Analysis)	NW
4741	4	37.040898	I-26 WB (Basic Analysis)	NW
4741	5	40.493863	I-26 WB (Basic Analysis)	NW
4741	6	35.49379	I-26 WB (Basic Analysis)	NW
4741	7	32.152935	I-26 WB (Basic Analysis)	NW
4741	8	33.924261	I-26 WB (Basic Analysis)	NW
4741	9	35.448947	I-26 WB (Basic Analysis)	NW
4741	10	36.659727	I-26 WB (Basic Analysis)	NW
4742	1	23.175964	I-26 WB (Diverge Analysis)	NW
4742	2	23.647485	I-26 WB (Diverge Analysis)	NW
4742	3	24.685783	I-26 WB (Diverge Analysis)	NW
4742	4	23.183108	I-26 WB (Diverge Analysis)	NW
4742	5	25.640732	I-26 WB (Diverge Analysis)	NW
4742	6	24.400013	I-26 WB (Diverge Analysis)	NW
4742	7	24.504795	I-26 WB (Diverge Analysis)	NW
4742	8	23.711783	I-26 WB (Diverge Analysis)	NW
4742	9	25.82172	I-26 WB (Diverge Analysis)	NW
4742	10	24.750082	I-26 WB (Diverge Analysis)	NW
4745	1	18.73346	I-26 EB (Basic Analysis)	SE
4745	2	17.082429	I-26 EB (Basic Analysis)	SE
4745	3	15.095786	I-26 EB (Basic Analysis)	SE
4745	4	17.805459	I-26 EB (Basic Analysis)	SE
4745	5	16.746817	I-26 EB (Basic Analysis)	SE
4745	6	17.210818	I-26 EB (Basic Analysis)	SE
4745	7	15.712952	I-26 EB (Basic Analysis)	SE
4745	8	17.345964	I-26 EB (Basic Analysis)	SE
4745	9	14.784951	I-26 EB (Basic Analysis)	SE
4745	10	19.030781	I-26 EB (Basic Analysis)	SE
4753	1	26.548777	I-26 WB (Basic Analysis)	NW
4753	2	27.318057	I-26 WB (Basic Analysis)	NW

RPA AM

ID	Run	Density	Name (Type)	Direction
4753	3	28.078742	I-26 WB (Basic Analysis)	NW
4753	4	27.333099	I-26 WB (Basic Analysis)	NW
4753	5	25.57106	I-26 WB (Basic Analysis)	NW
4753	6	25.968593	I-26 WB (Basic Analysis)	NW
4753	7	27.823032	I-26 WB (Basic Analysis)	NW
4753	8	26.952756	I-26 WB (Basic Analysis)	NW
4753	9	26.602497	I-26 WB (Basic Analysis)	NW
4753	10	25.663459	I-26 WB (Basic Analysis)	NW
4755	1	17.357793	I-26 EB (Basic Analysis)	SE
4755	2	17.439021	I-26 EB (Basic Analysis)	SE
4755	3	19.744646	I-26 EB (Basic Analysis)	SE
4755	4	18.432502	I-26 EB (Basic Analysis)	SE
4755	5	20.13204	I-26 EB (Basic Analysis)	SE
4755	6	21.950297	I-26 EB (Basic Analysis)	SE
4755	7	17.813919	I-26 EB (Basic Analysis)	SE
4755	8	17.670208	I-26 EB (Basic Analysis)	SE
4755	9	20.525684	I-26 EB (Basic Analysis)	SE
4755	10	17.601477	I-26 EB (Basic Analysis)	SE
4756	1	12.65462	I-26 EB (Diverge Analysis)	SE
4756	2	14.266116	I-26 EB (Diverge Analysis)	SE
4756	3	12.648373	I-26 EB (Diverge Analysis)	SE
4756	4	12.4714	I-26 EB (Diverge Analysis)	SE
4756	5	13.000238	I-26 EB (Diverge Analysis)	SE
4756	6	13.853873	I-26 EB (Diverge Analysis)	SE
4756	7	13.325035	I-26 EB (Diverge Analysis)	SE
4756	8	13.699802	I-26 EB (Diverge Analysis)	SE
4756	9	13.868447	I-26 EB (Diverge Analysis)	SE
4756	10	11.413726	I-26 EB (Diverge Analysis)	SE
4760	1	17.170804	I-26 WB (Merge Analysis)	NW
4760	2	17.24185	I-26 WB (Merge Analysis)	NW
4760	3	16.08144	I-26 WB (Merge Analysis)	NW
4760	4	15.911227	I-26 WB (Merge Analysis)	NW
4760	5	15.81206	I-26 WB (Merge Analysis)	NW
4760	6	15.718812	I-26 WB (Merge Analysis)	NW
4760	7	15.897906	I-26 WB (Merge Analysis)	NW
4760	8	14.990596	I-26 WB (Merge Analysis)	NW
4760	9	15.743974	I-26 WB (Merge Analysis)	NW
4760	10	16.626122	I-26 WB (Merge Analysis)	NW
4761	1	28.109286	I-26 WB (Basic Analysis)	NW
4761	2	28.249428	I-26 WB (Basic Analysis)	NW
4761	3	28.347983	I-26 WB (Basic Analysis)	NW
4761	4	27.695762	I-26 WB (Basic Analysis)	NW
4761	5	27.970469	I-26 WB (Basic Analysis)	NW
4761	6	28.257832	I-26 WB (Basic Analysis)	NW
4761	7	27.867198	I-26 WB (Basic Analysis)	NW
4761	8	27.406342	I-26 WB (Basic Analysis)	NW
4761	9	28.213458	I-26 WB (Basic Analysis)	NW
4761	10	28.059986	I-26 WB (Basic Analysis)	NW
4762	1	28.109286	I-26 WB (Basic Analysis)	NW
4762	2	28.249428	I-26 WB (Basic Analysis)	NW
4762	3	28.347983	I-26 WB (Basic Analysis)	NW
4762	4	27.695762	I-26 WB (Basic Analysis)	NW
4762	5	27.970469	I-26 WB (Basic Analysis)	NW
4762	6	28.257832	I-26 WB (Basic Analysis)	NW
4762	7	27.867198	I-26 WB (Basic Analysis)	NW
4762	8	27.406342	I-26 WB (Basic Analysis)	NW
4762	9	28.213458	I-26 WB (Basic Analysis)	NW
4762	10	28.059986	I-26 WB (Basic Analysis)	NW
4763	1	28.109286	I-26 WB (Basic Analysis)	NW
4763	2	28.249428	I-26 WB (Basic Analysis)	NW
4763	3	28.347983	I-26 WB (Basic Analysis)	NW
4763	4	27.695762	I-26 WB (Basic Analysis)	NW
4763	5	27.970469	I-26 WB (Basic Analysis)	NW
4763	6	28.257832	I-26 WB (Basic Analysis)	NW

RPA AM

ID	Run	Density	Name (Type)	Direction
4763	7	27.867198	I-26 WB (Basic Analysis)	NW
4763	8	27.406342	I-26 WB (Basic Analysis)	NW
4763	9	28.213458	I-26 WB (Basic Analysis)	NW
4763	10	28.059986	I-26 WB (Basic Analysis)	NW
4764	1	28.109286	I-26 WB (Basic Analysis)	NW
4764	2	28.249428	I-26 WB (Basic Analysis)	NW
4764	3	28.347983	I-26 WB (Basic Analysis)	NW
4764	4	27.695762	I-26 WB (Basic Analysis)	NW
4764	5	27.970469	I-26 WB (Basic Analysis)	NW
4764	6	28.257832	I-26 WB (Basic Analysis)	NW
4764	7	27.867198	I-26 WB (Basic Analysis)	NW
4764	8	27.406342	I-26 WB (Basic Analysis)	NW
4764	9	28.213458	I-26 WB (Basic Analysis)	NW
4764	10	28.059986	I-26 WB (Basic Analysis)	NW
4769	1	16.366581	I-26 EB (Basic Analysis)	SE
4769	2	17.064354	I-26 EB (Basic Analysis)	SE
4769	3	16.480922	I-26 EB (Basic Analysis)	SE
4769	4	16.844498	I-26 EB (Basic Analysis)	SE
4769	5	16.793503	I-26 EB (Basic Analysis)	SE
4769	6	16.778019	I-26 EB (Basic Analysis)	SE
4769	7	17.034505	I-26 EB (Basic Analysis)	SE
4769	8	16.734856	I-26 EB (Basic Analysis)	SE
4769	9	17.060276	I-26 EB (Basic Analysis)	SE
4769	10	16.959894	I-26 EB (Basic Analysis)	SE
6079	1	17.434838	CD ROAD I-20 WB TO I-20 (Basic Analysis)	NW
6079	2	19.271967	CD ROAD I-20 WB TO I-20 (Basic Analysis)	NW
6079	3	17.769749	CD ROAD I-20 WB TO I-20 (Basic Analysis)	NW
6079	4	17.727478	CD ROAD I-20 WB TO I-20 (Basic Analysis)	NW
6079	5	17.737233	CD ROAD I-20 WB TO I-20 (Basic Analysis)	NW
6079	6	17.571404	CD ROAD I-20 WB TO I-20 (Basic Analysis)	NW
6079	7	17.269009	CD ROAD I-20 WB TO I-20 (Basic Analysis)	NW
6079	8	17.311279	CD ROAD I-20 WB TO I-20 (Basic Analysis)	NW
6079	9	17.386065	CD ROAD I-20 WB TO I-20 (Basic Analysis)	NW
6079	10	17.025143	CD ROAD I-20 WB TO I-20 (Basic Analysis)	NW
6149	1	24.460365	I-26 EB (Merge Analysis)	S
6149	2	25.212827	I-26 EB (Merge Analysis)	S
6149	3	26.881728	I-26 EB (Merge Analysis)	S
6149	4	25.554576	I-26 EB (Merge Analysis)	S
6149	5	25.097888	I-26 EB (Merge Analysis)	S
6149	6	24.769932	I-26 EB (Merge Analysis)	S
6149	7	25.723152	I-26 EB (Merge Analysis)	S
6149	8	25.680242	I-26 EB (Merge Analysis)	S
6149	9	26.539979	I-26 EB (Merge Analysis)	S
6149	10	25.571433	I-26 EB (Merge Analysis)	S
6150	1	24.460365	I-26 EB (Merge Analysis)	S
6150	2	25.212827	I-26 EB (Merge Analysis)	S
6150	3	26.881728	I-26 EB (Merge Analysis)	S
6150	4	25.554576	I-26 EB (Merge Analysis)	S
6150	5	25.097888	I-26 EB (Merge Analysis)	S
6150	6	24.769932	I-26 EB (Merge Analysis)	S
6150	7	25.723152	I-26 EB (Merge Analysis)	S
6150	8	25.680242	I-26 EB (Merge Analysis)	S
6150	9	26.539979	I-26 EB (Merge Analysis)	S
6150	10	25.571433	I-26 EB (Merge Analysis)	S
6151	1	24.460365	I-26 EB (Merge Analysis)	S
6151	2	25.212827	I-26 EB (Merge Analysis)	S
6151	3	26.881728	I-26 EB (Merge Analysis)	S
6151	4	25.554576	I-26 EB (Merge Analysis)	S
6151	5	25.097888	I-26 EB (Merge Analysis)	S
6151	6	24.769932	I-26 EB (Merge Analysis)	S
6151	7	25.723152	I-26 EB (Merge Analysis)	S
6151	8	25.680242	I-26 EB (Merge Analysis)	S
6151	9	26.539979	I-26 EB (Merge Analysis)	S
6151	10	25.571433	I-26 EB (Merge Analysis)	S

RPA AM

ID	Run	Density	Name (Type)	Direction
6152	1	28.001763	I-26 EB (Basic Analysis)	S
6152	2	28.628707	I-26 EB (Basic Analysis)	S
6152	3	29.28375	I-26 EB (Basic Analysis)	S
6152	4	29.494488	I-26 EB (Basic Analysis)	S
6152	5	28.809591	I-26 EB (Basic Analysis)	S
6152	6	28.848226	I-26 EB (Basic Analysis)	S
6152	7	29.076525	I-26 EB (Basic Analysis)	S
6152	8	28.393384	I-26 EB (Basic Analysis)	S
6152	9	30.110896	I-26 EB (Basic Analysis)	S
6152	10	28.10362	I-26 EB (Basic Analysis)	S
6159	1	33.025391	I-26 WB (Diverge Analysis)	N
6159	2	32.338997	I-26 WB (Diverge Analysis)	N
6159	3	32.943824	I-26 WB (Diverge Analysis)	N
6159	4	32.800697	I-26 WB (Diverge Analysis)	N
6159	5	32.249735	I-26 WB (Diverge Analysis)	N
6159	6	32.163551	I-26 WB (Diverge Analysis)	N
6159	7	32.648336	I-26 WB (Diverge Analysis)	N
6159	8	31.935779	I-26 WB (Diverge Analysis)	N
6159	9	33.223921	I-26 WB (Diverge Analysis)	N
6159	10	32.128154	I-26 WB (Diverge Analysis)	N
6160	1	33.025391	I-26 WB (Diverge Analysis)	N
6160	2	32.338997	I-26 WB (Diverge Analysis)	N
6160	3	32.943824	I-26 WB (Diverge Analysis)	N
6160	4	32.800697	I-26 WB (Diverge Analysis)	N
6160	5	32.249735	I-26 WB (Diverge Analysis)	N
6160	6	32.163551	I-26 WB (Diverge Analysis)	N
6160	7	32.648336	I-26 WB (Diverge Analysis)	N
6160	8	31.935779	I-26 WB (Diverge Analysis)	N
6160	9	33.223921	I-26 WB (Diverge Analysis)	N
6160	10	32.128154	I-26 WB (Diverge Analysis)	N
6165	1	25.091987	I-26 WB (Basic Analysis)	N
6165	2	26.284505	I-26 WB (Basic Analysis)	N
6165	3	24.869247	I-26 WB (Basic Analysis)	N
6165	4	24.97205	I-26 WB (Basic Analysis)	N
6165	5	25.744216	I-26 WB (Basic Analysis)	N
6165	6	25.603719	I-26 WB (Basic Analysis)	N
6165	7	26.270797	I-26 WB (Basic Analysis)	N
6165	8	24.543703	I-26 WB (Basic Analysis)	N
6165	9	25.363844	I-26 WB (Basic Analysis)	N
6165	10	25.211924	I-26 WB (Basic Analysis)	N
6178	1	24.017436	I-26 EB (Basic Analysis)	S
6178	2	24.954782	I-26 EB (Basic Analysis)	S
6178	3	24.178497	I-26 EB (Basic Analysis)	S
6178	4	24.800976	I-26 EB (Basic Analysis)	S
6178	5	24.607993	I-26 EB (Basic Analysis)	S
6178	6	24.682961	I-26 EB (Basic Analysis)	S
6178	7	24.724073	I-26 EB (Basic Analysis)	S
6178	8	24.547535	I-26 EB (Basic Analysis)	S
6178	9	25.460214	I-26 EB (Basic Analysis)	S
6178	10	24.249596	I-26 EB (Basic Analysis)	S
6207	1	11.753813	I-20 EB (Basic Analysis)	E
6207	2	10.622812	I-20 EB (Basic Analysis)	E
6207	3	10.823741	I-20 EB (Basic Analysis)	E
6207	4	10.534776	I-20 EB (Basic Analysis)	E
6207	5	10.940259	I-20 EB (Basic Analysis)	E
6207	6	11.144295	I-20 EB (Basic Analysis)	E
6207	7	11.025705	I-20 EB (Basic Analysis)	E
6207	8	10.947509	I-20 EB (Basic Analysis)	E
6207	9	10.882259	I-20 EB (Basic Analysis)	E
6207	10	10.642491	I-20 EB (Basic Analysis)	E
6216	1	11.570043	I-20 EB (Basic Analysis)	NE
6216	2	10.890838	I-20 EB (Basic Analysis)	NE
6216	3	12.877415	I-20 EB (Basic Analysis)	NE
6216	4	12.045094	I-20 EB (Basic Analysis)	NE

RPA AM

ID	Run	Density	Name (Type)	Direction
6216	5	11.585747	I-20 EB (Basic Analysis)	NE
6216	6	11.393371	I-20 EB (Basic Analysis)	NE
6216	7	11.083214	I-20 EB (Basic Analysis)	NE
6216	8	13.101199	I-20 EB (Basic Analysis)	NE
6216	9	11.42478	I-20 EB (Basic Analysis)	NE
6216	10	9.838659	I-20 EB (Basic Analysis)	NE
6223	1	19.233523	I-26 EB (Basic Analysis)	SE
6223	2	19.963786	I-26 EB (Basic Analysis)	SE
6223	3	20.45446	I-26 EB (Basic Analysis)	SE
6223	4	20.94867	I-26 EB (Basic Analysis)	SE
6223	5	19.951409	I-26 EB (Basic Analysis)	SE
6223	6	20.632164	I-26 EB (Basic Analysis)	SE
6223	7	21.179419	I-26 EB (Basic Analysis)	SE
6223	8	20.698471	I-26 EB (Basic Analysis)	SE
6223	9	21.762039	I-26 EB (Basic Analysis)	SE
6223	10	19.862999	I-26 EB (Basic Analysis)	SE
6234	1	16.464442	I-20 WB (Basic Analysis)	SW
6234	2	17.025059	I-20 WB (Basic Analysis)	SW
6234	3	16.433531	I-20 WB (Basic Analysis)	SW
6234	4	16.441961	I-20 WB (Basic Analysis)	SW
6234	5	17.987522	I-20 WB (Basic Analysis)	SW
6234	6	16.588087	I-20 WB (Basic Analysis)	SW
6234	7	15.978293	I-20 WB (Basic Analysis)	SW
6234	8	17.324336	I-20 WB (Basic Analysis)	SW
6234	9	16.588087	I-20 WB (Basic Analysis)	SW
6234	10	16.062596	I-20 WB (Basic Analysis)	SW
6238	1	19.056884	I-20 EB (Merge Analysis)	NE
6238	2	19.348262	I-20 EB (Merge Analysis)	NE
6238	3	19.356084	I-20 EB (Merge Analysis)	NE
6238	4	19.889951	I-20 EB (Merge Analysis)	NE
6238	5	19.291551	I-20 EB (Merge Analysis)	NE
6238	6	20.627195	I-20 EB (Merge Analysis)	NE
6238	7	20.488351	I-20 EB (Merge Analysis)	NE
6238	8	19.790218	I-20 EB (Merge Analysis)	NE
6238	9	20.241951	I-20 EB (Merge Analysis)	NE
6238	10	19.995551	I-20 EB (Merge Analysis)	NE
6241	1	25.496375	I-20 EB (Basic Analysis)	NE
6241	2	24.228309	I-20 EB (Basic Analysis)	NE
6241	3	22.765156	I-20 EB (Basic Analysis)	NE
6241	4	22.037332	I-20 EB (Basic Analysis)	NE
6241	5	25.143717	I-20 EB (Basic Analysis)	NE
6241	6	23.462968	I-20 EB (Basic Analysis)	NE
6241	7	22.825183	I-20 EB (Basic Analysis)	NE
6241	8	21.92103	I-20 EB (Basic Analysis)	NE
6241	9	24.033222	I-20 EB (Basic Analysis)	NE
6241	10	24.168282	I-20 EB (Basic Analysis)	NE
6242	1	35.225595	I-20 EB (Merge Analysis)	NE
6242	2	36.500664	I-20 EB (Merge Analysis)	NE
6242	3	31.879277	I-20 EB (Merge Analysis)	NE
6242	4	34.101977	I-20 EB (Merge Analysis)	NE
6242	5	34.546178	I-20 EB (Merge Analysis)	NE
6242	6	34.230583	I-20 EB (Merge Analysis)	NE
6242	7	34.874464	I-20 EB (Merge Analysis)	NE
6242	8	33.807535	I-20 EB (Merge Analysis)	NE
6242	9	34.261043	I-20 EB (Merge Analysis)	NE
6242	10	32.732144	I-20 EB (Merge Analysis)	NE
6246	1	41.36086	I-20 WB (Merge Analysis)	SW
6246	2	40.564057	I-20 WB (Merge Analysis)	SW
6246	3	40.404696	I-20 WB (Merge Analysis)	SW
6246	4	41.746432	I-20 WB (Merge Analysis)	SW
6246	5	45.741255	I-20 WB (Merge Analysis)	SW
6246	6	41.493886	I-20 WB (Merge Analysis)	SW
6246	7	41.199474	I-20 WB (Merge Analysis)	SW
6246	8	42.412236	I-20 WB (Merge Analysis)	SW

RPA AM

ID	Run	Density	Name (Type)	Direction
6246	9	41.980071	I-20 WB (Merge Analysis)	SW
6246	10	40.601196	I-20 WB (Merge Analysis)	SW
6247	1	41.36086	I-20 WB (Merge Analysis)	SW
6247	2	40.564057	I-20 WB (Merge Analysis)	SW
6247	3	40.404696	I-20 WB (Merge Analysis)	SW
6247	4	41.746432	I-20 WB (Merge Analysis)	SW
6247	5	45.741255	I-20 WB (Merge Analysis)	SW
6247	6	41.493886	I-20 WB (Merge Analysis)	SW
6247	7	41.199474	I-20 WB (Merge Analysis)	SW
6247	8	42.412236	I-20 WB (Merge Analysis)	SW
6247	9	41.980071	I-20 WB (Merge Analysis)	SW
6247	10	40.601196	I-20 WB (Merge Analysis)	SW
6249	1	39.097776	I-20 WB (Basic Analysis)	SW
6249	2	39.726475	I-20 WB (Basic Analysis)	SW
6249	3	37.389193	I-20 WB (Basic Analysis)	SW
6249	4	38.513346	I-20 WB (Basic Analysis)	SW
6249	5	38.779105	I-20 WB (Basic Analysis)	SW
6249	6	40.170337	I-20 WB (Basic Analysis)	SW
6249	7	38.46213	I-20 WB (Basic Analysis)	SW
6249	8	38.991124	I-20 WB (Basic Analysis)	SW
6249	9	38.022282	I-20 WB (Basic Analysis)	SW
6249	10	37.818311	I-20 WB (Basic Analysis)	SW
6251	1	85.854711	I-20 WB (Basic Analysis)	SW
6251	2	76.166865	I-20 WB (Basic Analysis)	SW
6251	3	85.020388	I-20 WB (Basic Analysis)	SW
6251	4	89.583099	I-20 WB (Basic Analysis)	SW
6251	5	82.719787	I-20 WB (Basic Analysis)	SW
6251	6	81.751375	I-20 WB (Basic Analysis)	SW
6251	7	83.117085	I-20 WB (Basic Analysis)	SW
6251	8	84.849053	I-20 WB (Basic Analysis)	SW
6251	9	88.830718	I-20 WB (Basic Analysis)	SW
6251	10	85.221519	I-20 WB (Basic Analysis)	SW
6254	1	35.277212	I-20 EB (Basic Analysis)	NE
6254	2	33.774908	I-20 EB (Basic Analysis)	NE
6254	3	32.392888	I-20 EB (Basic Analysis)	NE
6254	4	32.57958	I-20 EB (Basic Analysis)	NE
6254	5	33.232374	I-20 EB (Basic Analysis)	NE
6254	6	33.741078	I-20 EB (Basic Analysis)	NE
6254	7	33.233627	I-20 EB (Basic Analysis)	NE
6254	8	31.974398	I-20 EB (Basic Analysis)	NE
6254	9	33.668406	I-20 EB (Basic Analysis)	NE
6254	10	33.333864	I-20 EB (Basic Analysis)	NE
6258	1	33.309673	I-20 EB (Merge Analysis)	NE
6258	2	32.113949	I-20 EB (Merge Analysis)	NE
6258	3	30.700968	I-20 EB (Merge Analysis)	NE
6258	4	32.083372	I-20 EB (Merge Analysis)	NE
6258	5	33.549461	I-20 EB (Merge Analysis)	NE
6258	6	32.767333	I-20 EB (Merge Analysis)	NE
6258	7	33.333812	I-20 EB (Merge Analysis)	NE
6258	8	34.651845	I-20 EB (Merge Analysis)	NE
6258	9	32.873548	I-20 EB (Merge Analysis)	NE
6258	10	32.601573	I-20 EB (Merge Analysis)	NE
6259	1	33.309673	I-20 EB (Merge Analysis)	NE
6259	2	32.113949	I-20 EB (Merge Analysis)	NE
6259	3	30.700968	I-20 EB (Merge Analysis)	NE
6259	4	32.083372	I-20 EB (Merge Analysis)	NE
6259	5	33.549461	I-20 EB (Merge Analysis)	NE
6259	6	32.767333	I-20 EB (Merge Analysis)	NE
6259	7	33.333812	I-20 EB (Merge Analysis)	NE

RPA AM

ID	Run	Density	Name (Type)	Direction
6259	8	34.651845	I-20 EB (Merge Analysis)	NE
6259	9	32.873548	I-20 EB (Merge Analysis)	NE
6259	10	32.601573	I-20 EB (Merge Analysis)	NE
8539	1	136.908782	I-20 WB (Basic Analysis)	SW
8539	2	124.67181	I-20 WB (Basic Analysis)	SW
8539	3	124.295178	I-20 WB (Basic Analysis)	SW
8539	4	136.466461	I-20 WB (Basic Analysis)	SW
8539	5	121.712499	I-20 WB (Basic Analysis)	SW
8539	6	115.498301	I-20 WB (Basic Analysis)	SW
8539	7	138.449867	I-20 WB (Basic Analysis)	SW
8539	8	130.719956	I-20 WB (Basic Analysis)	SW
8539	9	125.037842	I-20 WB (Basic Analysis)	SW
8539	10	120.481115	I-20 WB (Basic Analysis)	SW
8542	1	16.754672	I-20 EB (Basic Analysis)	NE
8542	2	16.145784	I-20 EB (Basic Analysis)	NE
8542	3	16.558727	I-20 EB (Basic Analysis)	NE
8542	4	16.101429	I-20 EB (Basic Analysis)	NE
8542	5	15.866464	I-20 EB (Basic Analysis)	NE
8542	6	16.499214	I-20 EB (Basic Analysis)	NE
8542	7	16.573606	I-20 EB (Basic Analysis)	NE
8542	8	16.484336	I-20 EB (Basic Analysis)	NE
8542	9	16.097499	I-20 EB (Basic Analysis)	NE
8542	10	16.002615	I-20 EB (Basic Analysis)	NE
8554	1	19.956095	I-26 WB (Basic Analysis)	N
8554	2	20.214651	I-26 WB (Basic Analysis)	N
8554	3	20.250431	I-26 WB (Basic Analysis)	N
8554	4	20.511687	I-26 WB (Basic Analysis)	N
8554	5	20.74054	I-26 WB (Basic Analysis)	N
8554	6	20.453293	I-26 WB (Basic Analysis)	N
8554	7	20.064446	I-26 WB (Basic Analysis)	N
8554	8	19.681674	I-26 WB (Basic Analysis)	N
8554	9	20.352706	I-26 WB (Basic Analysis)	N
8554	10	20.388485	I-26 WB (Basic Analysis)	N
8559	1	30.997278	I-126 NB (Basic Analysis)	W
8559	2	32.234109	I-126 NB (Basic Analysis)	W
8559	3	33.071413	I-126 NB (Basic Analysis)	W
8559	4	31.868585	I-126 NB (Basic Analysis)	W
8559	5	30.895271	I-126 NB (Basic Analysis)	W
8559	6	31.294797	I-126 NB (Basic Analysis)	W
8559	7	29.556434	I-126 NB (Basic Analysis)	W
8559	8	31.843083	I-126 NB (Basic Analysis)	W
8559	9	30.482994	I-126 NB (Basic Analysis)	W
8559	10	31.770828	I-126 NB (Basic Analysis)	W
8560	1	16.69375	I-126 SB (Basic Analysis)	E
8560	2	16.085298	I-126 SB (Basic Analysis)	E
8560	3	16.623494	I-126 SB (Basic Analysis)	E
8560	4	16.528101	I-126 SB (Basic Analysis)	E
8560	5	16.499741	I-126 SB (Basic Analysis)	E
8560	6	16.740157	I-126 SB (Basic Analysis)	E
8560	7	16.603513	I-126 SB (Basic Analysis)	E
8560	8	17.110126	I-126 SB (Basic Analysis)	E
8560	9	17.110771	I-126 SB (Basic Analysis)	E
8560	10	16.415306	I-126 SB (Basic Analysis)	E
8658	1	41.36086	I-20 WB (Merge Analysis)	SW
8658	2	40.564057	I-20 WB (Merge Analysis)	SW
8658	3	40.404696	I-20 WB (Merge Analysis)	SW
8658	4	41.746432	I-20 WB (Merge Analysis)	SW

RPA AM

ID	Run	Density	Name (Type)	Direction
8658	5	45.741255	I-20 WB (Merge Analysis)	SW
8658	6	41.493886	I-20 WB (Merge Analysis)	SW
8658	7	41.199474	I-20 WB (Merge Analysis)	SW
8658	8	42.412236	I-20 WB (Merge Analysis)	SW
8658	9	41.980071	I-20 WB (Merge Analysis)	SW
8658	10	40.601196	I-20 WB (Merge Analysis)	SW
8659	1	38.145301	I-20 EB (Basic Analysis)	NE
8659	2	38.21376	I-20 EB (Basic Analysis)	NE
8659	3	35.69342	I-20 EB (Basic Analysis)	NE
8659	4	36.059237	I-20 EB (Basic Analysis)	NE
8659	5	37.390883	I-20 EB (Basic Analysis)	NE
8659	6	37.275152	I-20 EB (Basic Analysis)	NE
8659	7	37.98798	I-20 EB (Basic Analysis)	NE
8659	8	36.345593	I-20 EB (Basic Analysis)	NE
8659	9	37.245972	I-20 EB (Basic Analysis)	NE
8659	10	36.431462	I-20 EB (Basic Analysis)	NE
8763	1	16.366581	I-26 EB (Basic Analysis)	SE
8763	2	17.064354	I-26 EB (Basic Analysis)	SE
8763	3	16.480922	I-26 EB (Basic Analysis)	SE
8763	4	16.844498	I-26 EB (Basic Analysis)	SE
8763	5	16.793503	I-26 EB (Basic Analysis)	SE
8763	6	16.778019	I-26 EB (Basic Analysis)	SE
8763	7	17.034505	I-26 EB (Basic Analysis)	SE
8763	8	16.734856	I-26 EB (Basic Analysis)	SE
8763	9	17.060276	I-26 EB (Basic Analysis)	SE
8763	10	16.959894	I-26 EB (Basic Analysis)	SE
8764	1	23.236886	I-20 WB (Basic Analysis)	S
8764	2	23.782904	I-20 WB (Basic Analysis)	S
8764	3	23.296673	I-20 WB (Basic Analysis)	S
8764	4	23.429035	I-20 WB (Basic Analysis)	S
8764	5	24.485506	I-20 WB (Basic Analysis)	S
8764	6	23.842751	I-20 WB (Basic Analysis)	S
8764	7	23.305241	I-20 WB (Basic Analysis)	S
8764	8	23.957645	I-20 WB (Basic Analysis)	S
8764	9	23.247343	I-20 WB (Basic Analysis)	S
8764	10	24.357661	I-20 WB (Basic Analysis)	S
8765	1	20.364017	I-20 EB (Basic Analysis)	NE
8765	2	19.34068	I-20 EB (Basic Analysis)	NE
8765	3	20.036881	I-20 EB (Basic Analysis)	NE
8765	4	19.118964	I-20 EB (Basic Analysis)	NE
8765	5	19.147074	I-20 EB (Basic Analysis)	NE
8765	6	19.057025	I-20 EB (Basic Analysis)	NE
8765	7	19.793904	I-20 EB (Basic Analysis)	NE
8765	8	19.570878	I-20 EB (Basic Analysis)	NE
8765	9	19.025684	I-20 EB (Basic Analysis)	NE
8765	10	19.523985	I-20 EB (Basic Analysis)	NE
8770	1	75.545384	I-20 WB (Basic Analysis)	SW
8770	2	69.923249	I-20 WB (Basic Analysis)	SW
8770	3	72.465237	I-20 WB (Basic Analysis)	SW
8770	4	78.661006	I-20 WB (Basic Analysis)	SW
8770	5	74.590192	I-20 WB (Basic Analysis)	SW
8770	6	74.737278	I-20 WB (Basic Analysis)	SW
8770	7	73.645816	I-20 WB (Basic Analysis)	SW
8770	8	70.582972	I-20 WB (Basic Analysis)	SW
8770	9	75.101964	I-20 WB (Basic Analysis)	SW
8770	10	77.007589	I-20 WB (Basic Analysis)	SW
8773	1	29.619617	I-26 WB (Basic Analysis)	N

RPA AM

ID	Run	Density	Name (Type)	Direction
8773	2	31.625915	I-26 WB (Basic Analysis)	N
8773	3	29.29018	I-26 WB (Basic Analysis)	N
8773	4	30.452112	I-26 WB (Basic Analysis)	N
8773	5	28.788605	I-26 WB (Basic Analysis)	N
8773	6	29.779883	I-26 WB (Basic Analysis)	N
8773	7	29.972796	I-26 WB (Basic Analysis)	N
8773	8	28.70402	I-26 WB (Basic Analysis)	N
8773	9	30.661349	I-26 WB (Basic Analysis)	N
8773	10	30.044026	I-26 WB (Basic Analysis)	N
8774	1	40.935677	I-20 EB (Diverge Analysis)	NE
8774	2	40.04413	I-20 EB (Diverge Analysis)	NE
8774	3	36.159335	I-20 EB (Diverge Analysis)	NE
8774	4	38.205141	I-20 EB (Diverge Analysis)	NE
8774	5	38.255448	I-20 EB (Diverge Analysis)	NE
8774	6	38.062605	I-20 EB (Diverge Analysis)	NE
8774	7	38.068195	I-20 EB (Diverge Analysis)	NE
8774	8	40.337586	I-20 EB (Diverge Analysis)	NE
8774	9	51.326804	I-20 EB (Diverge Analysis)	NE
8774	10	40.776372	I-20 EB (Diverge Analysis)	NE
8784	1	13.077451	I-126 SB (Basic Analysis)	SE
8784	2	13.218658	I-126 SB (Basic Analysis)	SE
8784	3	13.35292	I-126 SB (Basic Analysis)	SE
8784	4	13.376069	I-126 SB (Basic Analysis)	SE
8784	5	12.43469	I-126 SB (Basic Analysis)	SE
8784	6	13.206312	I-126 SB (Basic Analysis)	SE
8784	7	14.121456	I-126 SB (Basic Analysis)	SE
8784	8	13.805862	I-126 SB (Basic Analysis)	SE
8784	9	14.151549	I-126 SB (Basic Analysis)	SE
8784	10	13.113717	I-126 SB (Basic Analysis)	SE
8789	1	24.017436	I-26 EB (Basic Analysis)	S
8789	2	24.954782	I-26 EB (Basic Analysis)	S
8789	3	24.178497	I-26 EB (Basic Analysis)	S
8789	4	24.800976	I-26 EB (Basic Analysis)	S
8789	5	24.607993	I-26 EB (Basic Analysis)	S
8789	6	24.682961	I-26 EB (Basic Analysis)	S
8789	7	24.724073	I-26 EB (Basic Analysis)	S
8789	8	24.547535	I-26 EB (Basic Analysis)	S
8789	9	25.460214	I-26 EB (Basic Analysis)	S
8789	10	24.249596	I-26 EB (Basic Analysis)	S
8790	1	37.622076	CD ROAD I-26 WB TO I-20 (Basic Analysis)	NE
8790	2	37.001666	CD ROAD I-26 WB TO I-20 (Basic Analysis)	NE
8790	3	44.688939	CD ROAD I-26 WB TO I-20 (Basic Analysis)	NE
8790	4	41.460866	CD ROAD I-26 WB TO I-20 (Basic Analysis)	NE
8790	5	41.548111	CD ROAD I-26 WB TO I-20 (Basic Analysis)	NE
8790	6	36.584828	CD ROAD I-26 WB TO I-20 (Basic Analysis)	NE
8790	7	38.542998	CD ROAD I-26 WB TO I-20 (Basic Analysis)	NE
8790	8	41.102191	CD ROAD I-26 WB TO I-20 (Basic Analysis)	NE
8790	9	38.397589	CD ROAD I-26 WB TO I-20 (Basic Analysis)	NE
8790	10	39.609328	CD ROAD I-26 WB TO I-20 (Basic Analysis)	NE
8791	1	18.630352	CD ROAD I-20 WB TO I-20 (Basic Analysis)	NE
8791	2	18.079844	CD ROAD I-20 WB TO I-20 (Basic Analysis)	NE
8791	3	19.028746	CD ROAD I-20 WB TO I-20 (Basic Analysis)	NE
8791	4	18.731761	CD ROAD I-20 WB TO I-20 (Basic Analysis)	NE
8791	5	17.398952	CD ROAD I-20 WB TO I-20 (Basic Analysis)	NE
8791	6	17.427926	CD ROAD I-20 WB TO I-20 (Basic Analysis)	NE
8791	7	19.44887	CD ROAD I-20 WB TO I-20 (Basic Analysis)	NE
8791	8	18.347854	CD ROAD I-20 WB TO I-20 (Basic Analysis)	NE

RPA AM

ID	Run	Density	Name (Type)	Direction
8791	9	18.036383	CD ROAD I-20 WB TO I-20 (Basic Analysis)	NE
8791	10	16.073387	CD ROAD I-20 WB TO I-20 (Basic Analysis)	NE
8792	1	14.101103	I-26 EB (Basic Analysis)	S
8792	2	15.384589	I-26 EB (Basic Analysis)	S
8792	3	15.429418	I-26 EB (Basic Analysis)	S
8792	4	14.744058	I-26 EB (Basic Analysis)	S
8792	5	15.146497	I-26 EB (Basic Analysis)	S
8792	6	15.374947	I-26 EB (Basic Analysis)	S
8792	7	15.441644	I-26 EB (Basic Analysis)	S
8792	8	15.053203	I-26 EB (Basic Analysis)	S
8792	9	15.539747	I-26 EB (Basic Analysis)	S
8792	10	14.821482	I-26 EB (Basic Analysis)	S
8802	1	17.819975	CD ROAD I-20 EB (Basic Analysis)	NE
8802	2	17.377204	CD ROAD I-20 EB (Basic Analysis)	NE
8802	3	17.44892	CD ROAD I-20 EB (Basic Analysis)	NE
8802	4	15.496986	CD ROAD I-20 EB (Basic Analysis)	NE
8802	5	15.001207	CD ROAD I-20 EB (Basic Analysis)	NE
8802	6	17.352259	CD ROAD I-20 EB (Basic Analysis)	NE
8802	7	18.290809	CD ROAD I-20 EB (Basic Analysis)	NE
8802	8	17.757613	CD ROAD I-20 EB (Basic Analysis)	NE
8802	9	18.053833	CD ROAD I-20 EB (Basic Analysis)	NE
8802	10	17.991471	CD ROAD I-20 EB (Basic Analysis)	NE
8819	1	72.263949	CD ROAD I-20 WB (Weaving Analysis)	SW
8819	2	45.736505	CD ROAD I-20 WB (Weaving Analysis)	SW
8819	3	38.561148	CD ROAD I-20 WB (Weaving Analysis)	SW
8819	4	47.413666	CD ROAD I-20 WB (Weaving Analysis)	SW
8819	5	22.784696	CD ROAD I-20 WB (Weaving Analysis)	SW
8819	6	34.214682	CD ROAD I-20 WB (Weaving Analysis)	SW
8819	7	66.877162	CD ROAD I-20 WB (Weaving Analysis)	SW
8819	8	61.859229	CD ROAD I-20 WB (Weaving Analysis)	SW
8819	9	38.512971	CD ROAD I-20 WB (Weaving Analysis)	SW
8819	10	22.604032	CD ROAD I-20 WB (Weaving Analysis)	SW
8826	1	14.652532	CD ROAD I-20 EB (Basic Analysis)	E
8826	2	14.571618	CD ROAD I-20 EB (Basic Analysis)	E
8826	3	13.553057	CD ROAD I-20 EB (Basic Analysis)	E
8826	4	13.931448	CD ROAD I-20 EB (Basic Analysis)	E
8826	5	13.986183	CD ROAD I-20 EB (Basic Analysis)	E
8826	6	14.300319	CD ROAD I-20 EB (Basic Analysis)	E
8826	7	13.281758	CD ROAD I-20 EB (Basic Analysis)	E
8826	8	13.450725	CD ROAD I-20 EB (Basic Analysis)	E
8826	9	14.002842	CD ROAD I-20 EB (Basic Analysis)	E
8826	10	14.03378	CD ROAD I-20 EB (Basic Analysis)	E
8828	1	24.8333	(Weaving Analysis)	NW
8828	2	26.142692	(Weaving Analysis)	NW
8828	3	26.069112	(Weaving Analysis)	NW
8828	4	26.301558	(Weaving Analysis)	NW
8828	5	25.906901	(Weaving Analysis)	NW
8828	6	27.152747	(Weaving Analysis)	NW
8828	7	23.813212	(Weaving Analysis)	NW
8828	8	24.709552	(Weaving Analysis)	NW
8828	9	24.577442	(Weaving Analysis)	NW
8828	10	24.159373	(Weaving Analysis)	NW
8829	1	17.085456	CD ROAD I-20 EB (Basic Analysis)	E
8829	2	18.258013	CD ROAD I-20 EB (Basic Analysis)	E
8829	3	17.093524	CD ROAD I-20 EB (Basic Analysis)	E
8829	4	18.142371	CD ROAD I-20 EB (Basic Analysis)	E
8829	5	16.878375	CD ROAD I-20 EB (Basic Analysis)	E

RPA AM

ID	Run	Density	Name (Type)	Direction
8829	6	19.444018	CD ROAD I-20 EB (Basic Analysis)	E
8829	7	19.134742	CD ROAD I-20 EB (Basic Analysis)	E
8829	8	17.574918	CD ROAD I-20 EB (Basic Analysis)	E
8829	9	18.309111	CD ROAD I-20 EB (Basic Analysis)	E
8829	10	17.806202	CD ROAD I-20 EB (Basic Analysis)	E
8830	1	35.164182	CD ROAD I-26 EB (Weaving Analysis)	SE
8830	2	25.569169	CD ROAD I-26 EB (Weaving Analysis)	SE
8830	3	25.415138	CD ROAD I-26 EB (Weaving Analysis)	SE
8830	4	26.147725	CD ROAD I-26 EB (Weaving Analysis)	SE
8830	5	24.194159	CD ROAD I-26 EB (Weaving Analysis)	SE
8830	6	27.297323	CD ROAD I-26 EB (Weaving Analysis)	SE
8830	7	29.344811	CD ROAD I-26 EB (Weaving Analysis)	SE
8830	8	24.881664	CD ROAD I-26 EB (Weaving Analysis)	SE
8830	9	26.647387	CD ROAD I-26 EB (Weaving Analysis)	SE
8830	10	24.859123	CD ROAD I-26 EB (Weaving Analysis)	SE
8831	1	45.002098	I-20 WB (Diverge Analysis)	SW
8831	2	43.213417	I-20 WB (Diverge Analysis)	SW
8831	3	42.704555	I-20 WB (Diverge Analysis)	SW
8831	4	44.269459	I-20 WB (Diverge Analysis)	SW
8831	5	49.648529	I-20 WB (Diverge Analysis)	SW
8831	6	44.737704	I-20 WB (Diverge Analysis)	SW
8831	7	43.556746	I-20 WB (Diverge Analysis)	SW
8831	8	45.630511	I-20 WB (Diverge Analysis)	SW
8831	9	44.910135	I-20 WB (Diverge Analysis)	SW
8831	10	43.183529	I-20 WB (Diverge Analysis)	SW
8832	1	45.002098	I-20 WB (Diverge Analysis)	SW
8832	2	43.213417	I-20 WB (Diverge Analysis)	SW
8832	3	42.704555	I-20 WB (Diverge Analysis)	SW
8832	4	44.269459	I-20 WB (Diverge Analysis)	SW
8832	5	49.648529	I-20 WB (Diverge Analysis)	SW
8832	6	44.737704	I-20 WB (Diverge Analysis)	SW
8832	7	43.556746	I-20 WB (Diverge Analysis)	SW
8832	8	45.630511	I-20 WB (Diverge Analysis)	SW
8832	9	44.910135	I-20 WB (Diverge Analysis)	SW
8832	10	43.183529	I-20 WB (Diverge Analysis)	SW
8837	1	11.815463	I-20 WB (Basic Analysis)	W
8837	2	11.92464	I-20 WB (Basic Analysis)	W
8837	3	12.139344	I-20 WB (Basic Analysis)	W
8837	4	11.899137	I-20 WB (Basic Analysis)	W
8837	5	12.336188	I-20 WB (Basic Analysis)	W
8837	6	13.119491	I-20 WB (Basic Analysis)	W
8837	7	13.169798	I-20 WB (Basic Analysis)	W
8837	8	12.482566	I-20 WB (Basic Analysis)	W
8837	9	13.440172	I-20 WB (Basic Analysis)	W
8837	10	12.066291	I-20 WB (Basic Analysis)	W
8838	1	11.858925	I-20 WB (Basic Analysis)	SW
8838	2	12.36452	I-20 WB (Basic Analysis)	SW
8838	3	11.453671	I-20 WB (Basic Analysis)	SW
8838	4	11.336996	I-20 WB (Basic Analysis)	SW
8838	5	11.933598	I-20 WB (Basic Analysis)	SW
8838	6	11.724359	I-20 WB (Basic Analysis)	SW
8838	7	12.166172	I-20 WB (Basic Analysis)	SW
8838	8	12.152948	I-20 WB (Basic Analysis)	SW
8838	9	12.159171	I-20 WB (Basic Analysis)	SW
8838	10	12.101611	I-20 WB (Basic Analysis)	SW
8839	1	38.145301	I-20 EB (Basic Analysis)	NE
8839	2	38.21376	I-20 EB (Basic Analysis)	NE

RPA AM

ID	Run	Density	Name (Type)	Direction
8839	3	35.69342	I-20 EB (Basic Analysis)	NE
8839	4	36.059237	I-20 EB (Basic Analysis)	NE
8839	5	37.390883	I-20 EB (Basic Analysis)	NE
8839	6	37.275152	I-20 EB (Basic Analysis)	NE
8839	7	37.98798	I-20 EB (Basic Analysis)	NE
8839	8	36.345593	I-20 EB (Basic Analysis)	NE
8839	9	37.245972	I-20 EB (Basic Analysis)	NE
8839	10	36.431462	I-20 EB (Basic Analysis)	NE
8845	1	7.567537	I-20 WB (Merge Analysis)	W
8845	2	7.334503	I-20 WB (Merge Analysis)	W
8845	3	7.62828	I-20 WB (Merge Analysis)	W
8845	4	7.808302	I-20 WB (Merge Analysis)	W
8845	5	7.647056	I-20 WB (Merge Analysis)	W
8845	6	8.375978	I-20 WB (Merge Analysis)	W
8845	7	7.958504	I-20 WB (Merge Analysis)	W
8845	8	7.723261	I-20 WB (Merge Analysis)	W
8845	9	7.920954	I-20 WB (Merge Analysis)	W
8845	10	8.012621	I-20 WB (Merge Analysis)	W
8849	1	23.021645	CD ROAD I-20 WB (Weaving Analysis)	W
8849	2	23.553567	CD ROAD I-20 WB (Weaving Analysis)	W
8849	3	23.12098	CD ROAD I-20 WB (Weaving Analysis)	W
8849	4	23.516717	CD ROAD I-20 WB (Weaving Analysis)	W
8849	5	23.628869	CD ROAD I-20 WB (Weaving Analysis)	W
8849	6	24.282556	CD ROAD I-20 WB (Weaving Analysis)	W
8849	7	23.074516	CD ROAD I-20 WB (Weaving Analysis)	W
8849	8	23.431801	CD ROAD I-20 WB (Weaving Analysis)	W
8849	9	22.231773	CD ROAD I-20 WB (Weaving Analysis)	W
8849	10	23.332466	CD ROAD I-20 WB (Weaving Analysis)	W
8852	1	11.040244	(Basic Analysis)	E
8852	2	9.985956	(Basic Analysis)	E
8852	3	11.85285	(Basic Analysis)	E
8852	4	12.315196	(Basic Analysis)	E
8852	5	10.238145	(Basic Analysis)	E
8852	6	11.646196	(Basic Analysis)	E
8852	7	10.763537	(Basic Analysis)	E
8852	8	11.369489	(Basic Analysis)	E
8852	9	11.085778	(Basic Analysis)	E
8852	10	10.32571	(Basic Analysis)	E
8853	1	15.861539	CD ROAD I-20 EB (Basic Analysis)	E
8853	2	16.700016	CD ROAD I-20 EB (Basic Analysis)	E
8853	3	16.544118	CD ROAD I-20 EB (Basic Analysis)	E
8853	4	15.04413	CD ROAD I-20 EB (Basic Analysis)	E
8853	5	16.156481	CD ROAD I-20 EB (Basic Analysis)	E
8853	6	16.417715	CD ROAD I-20 EB (Basic Analysis)	E
8853	7	16.72319	CD ROAD I-20 EB (Basic Analysis)	E
8853	8	16.504091	CD ROAD I-20 EB (Basic Analysis)	E
8853	9	17.502679	CD ROAD I-20 EB (Basic Analysis)	E
8853	10	17.702818	CD ROAD I-20 EB (Basic Analysis)	E
8855	1	24.131767	CD ROAD I-20 WB TO I-20 (Basic Analysis)	NW
8855	2	24.51982	CD ROAD I-20 WB TO I-20 (Basic Analysis)	NW
8855	3	23.758205	CD ROAD I-20 WB TO I-20 (Basic Analysis)	NW
8855	4	23.943376	CD ROAD I-20 WB TO I-20 (Basic Analysis)	NW
8855	5	23.579475	CD ROAD I-20 WB TO I-20 (Basic Analysis)	NW
8855	6	23.386254	CD ROAD I-20 WB TO I-20 (Basic Analysis)	NW
8855	7	23.843545	CD ROAD I-20 WB TO I-20 (Basic Analysis)	NW
8855	8	22.584384	CD ROAD I-20 WB TO I-20 (Basic Analysis)	NW
8855	9	24.212276	CD ROAD I-20 WB TO I-20 (Basic Analysis)	NW

RPA AM

ID	Run	Density	Name (Type)	Direction
8855	10	22.983709	CD ROAD I-20 WB TO I-20 (Basic Analysis)	NW
8863	1	15.677599	(Basic Analysis)	SE
8863	2	16.665426	(Basic Analysis)	SE
8863	3	15.847342	(Basic Analysis)	SE
8863	4	16.313178	(Basic Analysis)	SE
8863	5	16.707543	(Basic Analysis)	SE
8863	6	16.712648	(Basic Analysis)	SE
8863	7	15.907327	(Basic Analysis)	SE
8863	8	16.970453	(Basic Analysis)	SE
8863	9	17.178483	(Basic Analysis)	SE
8863	10	17.12488	(Basic Analysis)	SE
8869	1	16.134232	(Weaving Analysis)	SE
8869	2	13.934983	(Weaving Analysis)	SE
8869	3	16.136633	(Weaving Analysis)	SE
8869	4	14.628851	(Weaving Analysis)	SE
8869	5	16.391132	(Weaving Analysis)	SE
8869	6	13.987803	(Weaving Analysis)	SE
8869	7	15.296309	(Weaving Analysis)	SE
8869	8	14.518408	(Weaving Analysis)	SE
8869	9	14.542417	(Weaving Analysis)	SE
8869	10	13.620461	(Weaving Analysis)	SE
8871	1	25.793496	(Basic Analysis)	W
8871	2	26.812347	(Basic Analysis)	W
8871	3	28.092048	(Basic Analysis)	W
8871	4	28.085911	(Basic Analysis)	W
8871	5	27.736064	(Basic Analysis)	W
8871	6	27.779028	(Basic Analysis)	W
8871	7	26.701869	(Basic Analysis)	W
8871	8	26.008314	(Basic Analysis)	W
8871	9	26.760177	(Basic Analysis)	W
8871	10	24.320459	(Basic Analysis)	W
8877	1	7.549939	I-20 WB (Diverge Analysis)	W
8877	2	7.406479	I-20 WB (Diverge Analysis)	W
8877	3	7.554757	I-20 WB (Diverge Analysis)	W
8877	4	7.534658	I-20 WB (Diverge Analysis)	W
8877	5	7.551866	I-20 WB (Diverge Analysis)	W
8877	6	8.262052	I-20 WB (Diverge Analysis)	W
8877	7	8.159816	I-20 WB (Diverge Analysis)	W
8877	8	8.340349	I-20 WB (Diverge Analysis)	W
8877	9	7.982603	I-20 WB (Diverge Analysis)	W
8877	10	8.020339	I-20 WB (Diverge Analysis)	W
8878	1	11.815463	I-20 WB (Basic Analysis)	W
8878	2	11.92464	I-20 WB (Basic Analysis)	W
8878	3	12.139344	I-20 WB (Basic Analysis)	W
8878	4	11.899137	I-20 WB (Basic Analysis)	W
8878	5	12.336188	I-20 WB (Basic Analysis)	W
8878	6	13.119491	I-20 WB (Basic Analysis)	W
8878	7	13.169798	I-20 WB (Basic Analysis)	W
8878	8	12.482566	I-20 WB (Basic Analysis)	W
8878	9	13.440172	I-20 WB (Basic Analysis)	W
8878	10	12.066291	I-20 WB (Basic Analysis)	W
8883	1	54.945739	I-26 WB (Basic Analysis)	NW
8883	2	56.785716	I-26 WB (Basic Analysis)	NW
8883	3	55.430251	I-26 WB (Basic Analysis)	NW
8883	4	52.484744	I-26 WB (Basic Analysis)	NW
8883	5	54.509985	I-26 WB (Basic Analysis)	NW
8883	6	56.457981	I-26 WB (Basic Analysis)	NW

RPA AM

ID	Run	Density	Name (Type)	Direction
8883	7	56.50674	I-26 WB (Basic Analysis)	NW
8883	8	56.577081	I-26 WB (Basic Analysis)	NW
8883	9	58.612672	I-26 WB (Basic Analysis)	NW
8883	10	50.353349	I-26 WB (Basic Analysis)	NW
8886	1	45.422006	I-26 WB (Basic Analysis)	NW
8886	2	46.236181	I-26 WB (Basic Analysis)	NW
8886	3	45.366349	I-26 WB (Basic Analysis)	NW
8886	4	53.399701	I-26 WB (Basic Analysis)	NW
8886	5	46.89025	I-26 WB (Basic Analysis)	NW
8886	6	49.427061	I-26 WB (Basic Analysis)	NW
8886	7	45.989272	I-26 WB (Basic Analysis)	NW
8886	8	44.138725	I-26 WB (Basic Analysis)	NW
8886	9	46.319976	I-26 WB (Basic Analysis)	NW
8886	10	44.510196	I-26 WB (Basic Analysis)	NW
8887	1	43.013162	I-26 WB (Merge Analysis)	NW
8887	2	41.67118	I-26 WB (Merge Analysis)	NW
8887	3	42.121451	I-26 WB (Merge Analysis)	NW
8887	4	44.934315	I-26 WB (Merge Analysis)	NW
8887	5	44.454027	I-26 WB (Merge Analysis)	NW
8887	6	44.461973	I-26 WB (Merge Analysis)	NW
8887	7	40.924262	I-26 WB (Merge Analysis)	NW
8887	8	40.318604	I-26 WB (Merge Analysis)	NW
8887	9	41.194424	I-26 WB (Merge Analysis)	NW
8887	10	41.238568	I-26 WB (Merge Analysis)	NW
8910	1	25.659435	I-26 EB (Basic Analysis)	SE
8910	2	26.191129	I-26 EB (Basic Analysis)	SE
8910	3	25.824887	I-26 EB (Basic Analysis)	SE
8910	4	27.310737	I-26 EB (Basic Analysis)	SE
8910	5	25.460251	I-26 EB (Basic Analysis)	SE
8910	6	27.787816	I-26 EB (Basic Analysis)	SE
8910	7	28.338785	I-26 EB (Basic Analysis)	SE
8910	8	26.57504	I-26 EB (Basic Analysis)	SE
8910	9	28.973283	I-26 EB (Basic Analysis)	SE
8910	10	26.941282	I-26 EB (Basic Analysis)	SE
8915	1	19.794462	I-26 EB (Basic Analysis)	SE
8915	2	20.73978	I-26 EB (Basic Analysis)	SE
8915	3	19.880775	I-26 EB (Basic Analysis)	SE
8915	4	20.397924	I-26 EB (Basic Analysis)	SE
8915	5	19.663054	I-26 EB (Basic Analysis)	SE
8915	6	20.76548	I-26 EB (Basic Analysis)	SE
8915	7	20.262878	I-26 EB (Basic Analysis)	SE
8915	8	19.787189	I-26 EB (Basic Analysis)	SE
8915	9	20.481085	I-26 EB (Basic Analysis)	SE
8915	10	19.922719	I-26 EB (Basic Analysis)	SE
8940	1	22.540124	I-26 EB (Basic Analysis)	SE
8940	2	26.078577	I-26 EB (Basic Analysis)	SE
8940	3	25.060857	I-26 EB (Basic Analysis)	SE
8940	4	27.198749	I-26 EB (Basic Analysis)	SE
8940	5	27.256707	I-26 EB (Basic Analysis)	SE
8940	6	27.17824	I-26 EB (Basic Analysis)	SE
8940	7	27.298403	I-26 EB (Basic Analysis)	SE
8940	8	25.608152	I-26 EB (Basic Analysis)	SE
8940	9	24.700691	I-26 EB (Basic Analysis)	SE
8940	10	26.515961	I-26 EB (Basic Analysis)	SE
8955	1	24.115745	I-20 EB (Basic Analysis)	NE
8955	2	25.370498	I-20 EB (Basic Analysis)	NE
8955	3	22.087551	I-20 EB (Basic Analysis)	NE

RPA AM

ID	Run	Density	Name (Type)	Direction
8955	4	21.291854	I-20 EB (Basic Analysis)	NE
8955	5	22.70519	I-20 EB (Basic Analysis)	NE
8955	6	22.755269	I-20 EB (Basic Analysis)	NE
8955	7	23.717896	I-20 EB (Basic Analysis)	NE
8955	8	23.100257	I-20 EB (Basic Analysis)	NE
8955	9	22.624508	I-20 EB (Basic Analysis)	NE
8955	10	23.467502	I-20 EB (Basic Analysis)	NE
8959	1	136.908782	I-20 WB (Basic Analysis)	SW
8959	2	124.67181	I-20 WB (Basic Analysis)	SW
8959	3	124.295178	I-20 WB (Basic Analysis)	SW
8959	4	136.466461	I-20 WB (Basic Analysis)	SW
8959	5	121.712499	I-20 WB (Basic Analysis)	SW
8959	6	115.498301	I-20 WB (Basic Analysis)	SW
8959	7	138.449867	I-20 WB (Basic Analysis)	SW
8959	8	130.719956	I-20 WB (Basic Analysis)	SW
8959	9	125.037842	I-20 WB (Basic Analysis)	SW
8959	10	120.481115	I-20 WB (Basic Analysis)	SW
8975	1	18.054896	I-26 EB (Weaving Analysis)	SE
8975	2	20.250684	I-26 EB (Weaving Analysis)	SE
8975	3	19.97621	I-26 EB (Weaving Analysis)	SE
8975	4	20.358461	I-26 EB (Weaving Analysis)	SE
8975	5	20.229128	I-26 EB (Weaving Analysis)	SE
8975	6	19.980521	I-26 EB (Weaving Analysis)	SE
8975	7	20.059558	I-26 EB (Weaving Analysis)	SE
8975	8	17.914066	I-26 EB (Weaving Analysis)	SE
8975	9	19.602581	I-26 EB (Weaving Analysis)	SE
8975	10	20.779512	I-26 EB (Weaving Analysis)	SE
8986	1	22.884079	I-26 EB (Basic Analysis)	SE
8986	2	24.747163	I-26 EB (Basic Analysis)	SE
8986	3	23.835441	I-26 EB (Basic Analysis)	SE
8986	4	24.500514	I-26 EB (Basic Analysis)	SE
8986	5	22.959689	I-26 EB (Basic Analysis)	SE
8986	6	24.143753	I-26 EB (Basic Analysis)	SE
8986	7	23.818557	I-26 EB (Basic Analysis)	SE
8986	8	23.599803	I-26 EB (Basic Analysis)	SE
8986	9	24.270748	I-26 EB (Basic Analysis)	SE
8986	10	24.070346	I-26 EB (Basic Analysis)	SE
8994	1	13.800149	I-126 SB (Basic Analysis)	SE
8994	2	14.267084	I-126 SB (Basic Analysis)	SE
8994	3	15.527167	I-126 SB (Basic Analysis)	SE
8994	4	14.877936	I-126 SB (Basic Analysis)	SE
8994	5	15.191358	I-126 SB (Basic Analysis)	SE
8994	6	14.593298	I-126 SB (Basic Analysis)	SE
8994	7	14.51974	I-126 SB (Basic Analysis)	SE
8994	8	15.952525	I-126 SB (Basic Analysis)	SE
8994	9	14.989873	I-126 SB (Basic Analysis)	SE
8994	10	15.191358	I-126 SB (Basic Analysis)	SE
8996	1	18.630352	CD ROAD I-20 WB TO I-20 (Basic Analysis)	NE
8996	2	18.079844	CD ROAD I-20 WB TO I-20 (Basic Analysis)	NE
8996	3	19.028746	CD ROAD I-20 WB TO I-20 (Basic Analysis)	NE
8996	4	18.731761	CD ROAD I-20 WB TO I-20 (Basic Analysis)	NE
8996	5	17.398952	CD ROAD I-20 WB TO I-20 (Basic Analysis)	NE
8996	6	17.427926	CD ROAD I-20 WB TO I-20 (Basic Analysis)	NE
8996	7	19.44887	CD ROAD I-20 WB TO I-20 (Basic Analysis)	NE
8996	8	18.347854	CD ROAD I-20 WB TO I-20 (Basic Analysis)	NE
8996	9	18.036383	CD ROAD I-20 WB TO I-20 (Basic Analysis)	NE
8996	10	16.073387	CD ROAD I-20 WB TO I-20 (Basic Analysis)	NE

RPA AM

ID	Run	Density	Name (Type)	Direction
9001	1	18.02202	I-126 NB (Merge Analysis)	NW
9001	2	16.156583	I-126 NB (Merge Analysis)	NW
9001	3	14.888718	I-126 NB (Merge Analysis)	NW
9001	4	16.450626	I-126 NB (Merge Analysis)	NW
9001	5	15.328202	I-126 NB (Merge Analysis)	NW
9001	6	16.333641	I-126 NB (Merge Analysis)	NW
9001	7	16.586582	I-126 NB (Merge Analysis)	NW
9001	8	15.928936	I-126 NB (Merge Analysis)	NW
9001	9	16.374744	I-126 NB (Merge Analysis)	NW
9001	10	15.909965	I-126 NB (Merge Analysis)	NW
9005	1	26.533383	I-126 NB (Basic Analysis)	NW
9005	2	24.890449	I-126 NB (Basic Analysis)	NW
9005	3	24.541325	I-126 NB (Basic Analysis)	NW
9005	4	23.514491	I-126 NB (Basic Analysis)	NW
9005	5	24.644008	I-126 NB (Basic Analysis)	NW
9005	6	24.602935	I-126 NB (Basic Analysis)	NW
9005	7	23.175636	I-126 NB (Basic Analysis)	NW
9005	8	25.691379	I-126 NB (Basic Analysis)	NW
9005	9	24.674814	I-126 NB (Basic Analysis)	NW
9005	10	24.835684	I-126 NB (Basic Analysis)	NW
9012	1	13.375158	I-126 SB (Merge Analysis)	E
9012	2	14.268762	I-126 SB (Merge Analysis)	E
9012	3	13.687475	I-126 SB (Merge Analysis)	E
9012	4	14.653322	I-126 SB (Merge Analysis)	E
9012	5	14.040915	I-126 SB (Merge Analysis)	E
9012	6	22.315641	I-126 SB (Merge Analysis)	E
9012	7	15.211269	I-126 SB (Merge Analysis)	E
9012	8	18.704548	I-126 SB (Merge Analysis)	E
9012	9	13.866418	I-126 SB (Merge Analysis)	E
9012	10	19.057988	I-126 SB (Merge Analysis)	E
9017	1	15.516153	I-126 SB (Basic Analysis)	E
9017	2	16.891372	I-126 SB (Basic Analysis)	E
9017	3	16.667771	I-126 SB (Basic Analysis)	E
9017	4	17.323959	I-126 SB (Basic Analysis)	E
9017	5	17.752162	I-126 SB (Basic Analysis)	E
9017	6	17.198275	I-126 SB (Basic Analysis)	E
9017	7	16.390096	I-126 SB (Basic Analysis)	E
9017	8	18.067834	I-126 SB (Basic Analysis)	E
9017	9	16.429555	I-126 SB (Basic Analysis)	E
9017	10	17.167585	I-126 SB (Basic Analysis)	E
9018	1	15.516153	I-126 SB (Basic Analysis)	E
9018	2	16.891372	I-126 SB (Basic Analysis)	E
9018	3	16.667771	I-126 SB (Basic Analysis)	E
9018	4	17.323959	I-126 SB (Basic Analysis)	E
9018	5	17.752162	I-126 SB (Basic Analysis)	E
9018	6	17.198275	I-126 SB (Basic Analysis)	E
9018	7	16.390096	I-126 SB (Basic Analysis)	E
9018	8	18.067834	I-126 SB (Basic Analysis)	E
9018	9	16.429555	I-126 SB (Basic Analysis)	E
9018	10	17.167585	I-126 SB (Basic Analysis)	E
9019	1	23.68797	I-126 NB (Diverge Analysis)	NW
9019	2	23.850087	I-126 NB (Diverge Analysis)	NW
9019	3	23.277022	I-126 NB (Diverge Analysis)	NW
9019	4	23.224239	I-126 NB (Diverge Analysis)	NW
9019	5	23.498205	I-126 NB (Diverge Analysis)	NW
9019	6	23.505745	I-126 NB (Diverge Analysis)	NW
9019	7	22.819575	I-126 NB (Diverge Analysis)	NW

RPA AM

ID	Run	Density	Name (Type)	Direction
9019	8	23.798562	I-126 NB (Diverge Analysis)	NW
9019	9	24.190659	I-126 NB (Diverge Analysis)	NW
9019	10	23.111134	I-126 NB (Diverge Analysis)	NW
9022	1	13.14855	107 (Basic Analysis)	NW
9022	2	13.434593	107 (Basic Analysis)	NW
9022	3	14.210996	107 (Basic Analysis)	NW
9022	4	13.623193	107 (Basic Analysis)	NW
9022	5	13.076254	107 (Basic Analysis)	NW
9022	6	13.18627	107 (Basic Analysis)	NW
9022	7	13.62005	107 (Basic Analysis)	NW
9022	8	13.774073	107 (Basic Analysis)	NW
9022	9	13.928096	107 (Basic Analysis)	NW
9022	10	12.994527	107 (Basic Analysis)	NW
9023	1	30.341265	I-126 NB (Basic Analysis)	NW
9023	2	31.679576	I-126 NB (Basic Analysis)	NW
9023	3	29.671263	I-126 NB (Basic Analysis)	NW
9023	4	29.415782	I-126 NB (Basic Analysis)	NW
9023	5	29.568055	I-126 NB (Basic Analysis)	NW
9023	6	31.253211	I-126 NB (Basic Analysis)	NW
9023	7	29.552828	I-126 NB (Basic Analysis)	NW
9023	8	29.170454	I-126 NB (Basic Analysis)	NW
9023	9	30.679649	I-126 NB (Basic Analysis)	NW
9023	10	29.539293	I-126 NB (Basic Analysis)	NW
9025	1	29.229468	CD ROAD I-26 WB TO I-20 (Diverge Analysis)	NE
9025	2	30.199528	CD ROAD I-26 WB TO I-20 (Diverge Analysis)	NE
9025	3	31.095559	CD ROAD I-26 WB TO I-20 (Diverge Analysis)	NE
9025	4	30.955155	CD ROAD I-26 WB TO I-20 (Diverge Analysis)	NE
9025	5	32.407694	CD ROAD I-26 WB TO I-20 (Diverge Analysis)	NE
9025	6	29.785976	CD ROAD I-26 WB TO I-20 (Diverge Analysis)	NE
9025	7	30.536497	CD ROAD I-26 WB TO I-20 (Diverge Analysis)	NE
9025	8	28.621903	CD ROAD I-26 WB TO I-20 (Diverge Analysis)	NE
9025	9	30.396093	CD ROAD I-26 WB TO I-20 (Diverge Analysis)	NE
9025	10	30.413963	CD ROAD I-26 WB TO I-20 (Diverge Analysis)	NE
9033	1	45.422006	I-26 WB (Basic Analysis)	NW
9033	2	46.236181	I-26 WB (Basic Analysis)	NW
9033	3	45.366349	I-26 WB (Basic Analysis)	NW
9033	4	53.399701	I-26 WB (Basic Analysis)	NW
9033	5	46.89025	I-26 WB (Basic Analysis)	NW
9033	6	49.427061	I-26 WB (Basic Analysis)	NW
9033	7	45.989272	I-26 WB (Basic Analysis)	NW
9033	8	44.138725	I-26 WB (Basic Analysis)	NW
9033	9	46.319976	I-26 WB (Basic Analysis)	NW
9033	10	44.510196	I-26 WB (Basic Analysis)	NW
9039	1	38.145301	I-20 EB (Basic Analysis)	NE
9039	2	38.21376	I-20 EB (Basic Analysis)	NE
9039	3	35.69342	I-20 EB (Basic Analysis)	NE
9039	4	36.059237	I-20 EB (Basic Analysis)	NE
9039	5	37.390883	I-20 EB (Basic Analysis)	NE
9039	6	37.275152	I-20 EB (Basic Analysis)	NE
9039	7	37.98798	I-20 EB (Basic Analysis)	NE
9039	8	36.345593	I-20 EB (Basic Analysis)	NE
9039	9	37.245972	I-20 EB (Basic Analysis)	NE
9039	10	36.431462	I-20 EB (Basic Analysis)	NE
9040	1	39.097776	I-20 WB (Basic Analysis)	SW
9040	2	39.726475	I-20 WB (Basic Analysis)	SW
9040	3	37.389193	I-20 WB (Basic Analysis)	SW
9040	4	38.513346	I-20 WB (Basic Analysis)	SW

RPA AM

ID	Run	Density	Name (Type)	Direction
9040	5	38.779105	I-20 WB (Basic Analysis)	SW
9040	6	40.170337	I-20 WB (Basic Analysis)	SW
9040	7	38.46213	I-20 WB (Basic Analysis)	SW
9040	8	38.991124	I-20 WB (Basic Analysis)	SW
9040	9	38.022282	I-20 WB (Basic Analysis)	SW
9040	10	37.818311	I-20 WB (Basic Analysis)	SW
9042	1	10.815693	I-20 WB (Basic Analysis)	W
9042	2	11.120971	I-20 WB (Basic Analysis)	W
9042	3	10.124107	I-20 WB (Basic Analysis)	W
9042	4	11.236863	I-20 WB (Basic Analysis)	W
9042	5	10.957968	I-20 WB (Basic Analysis)	W
9042	6	10.223982	I-20 WB (Basic Analysis)	W
9042	7	11.187868	I-20 WB (Basic Analysis)	W
9042	8	11.56287	I-20 WB (Basic Analysis)	W
9042	9	10.632903	I-20 WB (Basic Analysis)	W
9042	10	11.177504	I-20 WB (Basic Analysis)	W
9043	1	30.256834	CD ROAD I-20 WB (Basic Analysis)	W
9043	2	29.888423	CD ROAD I-20 WB (Basic Analysis)	W
9043	3	31.416852	CD ROAD I-20 WB (Basic Analysis)	W
9043	4	30.899189	CD ROAD I-20 WB (Basic Analysis)	W
9043	5	30.253055	CD ROAD I-20 WB (Basic Analysis)	W
9043	6	31.760701	CD ROAD I-20 WB (Basic Analysis)	W
9043	7	29.856306	CD ROAD I-20 WB (Basic Analysis)	W
9043	8	28.594266	CD ROAD I-20 WB (Basic Analysis)	W
9043	9	30.725375	CD ROAD I-20 WB (Basic Analysis)	W
9043	10	29.053361	CD ROAD I-20 WB (Basic Analysis)	W
9045	1	25.351162	CD ROAD I-20 EB (Weaving Analysis)	E
9045	2	25.183069	CD ROAD I-20 EB (Weaving Analysis)	E
9045	3	23.693715	CD ROAD I-20 EB (Weaving Analysis)	E
9045	4	23.325393	CD ROAD I-20 EB (Weaving Analysis)	E
9045	5	23.582476	CD ROAD I-20 EB (Weaving Analysis)	E
9045	6	24.059564	CD ROAD I-20 EB (Weaving Analysis)	E
9045	7	24.036081	CD ROAD I-20 EB (Weaving Analysis)	E
9045	8	23.411911	CD ROAD I-20 EB (Weaving Analysis)	E
9045	9	24.307996	CD ROAD I-20 EB (Weaving Analysis)	E
9045	10	23.872931	CD ROAD I-20 EB (Weaving Analysis)	E
9052	1	15.209379	CD ROAD I-20 EB (Basic Analysis)	NE
9052	2	14.545262	CD ROAD I-20 EB (Basic Analysis)	NE
9052	3	14.220666	CD ROAD I-20 EB (Basic Analysis)	NE
9052	4	14.437064	CD ROAD I-20 EB (Basic Analysis)	NE
9052	5	13.754293	CD ROAD I-20 EB (Basic Analysis)	NE
9052	6	14.642268	CD ROAD I-20 EB (Basic Analysis)	NE
9052	7	14.507953	CD ROAD I-20 EB (Basic Analysis)	NE
9052	8	13.55655	CD ROAD I-20 EB (Basic Analysis)	NE
9052	9	13.27113	CD ROAD I-20 EB (Basic Analysis)	NE
9052	10	13.509913	CD ROAD I-20 EB (Basic Analysis)	NE
9054	1	11.858925	I-20 WB (Basic Analysis)	SW
9054	2	12.36452	I-20 WB (Basic Analysis)	SW
9054	3	11.453671	I-20 WB (Basic Analysis)	SW
9054	4	11.336996	I-20 WB (Basic Analysis)	SW
9054	5	11.933598	I-20 WB (Basic Analysis)	SW
9054	6	11.724359	I-20 WB (Basic Analysis)	SW
9054	7	12.166172	I-20 WB (Basic Analysis)	SW
9054	8	12.152948	I-20 WB (Basic Analysis)	SW
9054	9	12.159171	I-20 WB (Basic Analysis)	SW
9054	10	12.101611	I-20 WB (Basic Analysis)	SW
9055	1	11.858925	I-20 WB (Basic Analysis)	SW

RPA AM

ID	Run	Density	Name (Type)	Direction
9055	2	12.36452	I-20 WB (Basic Analysis)	SW
9055	3	11.453671	I-20 WB (Basic Analysis)	SW
9055	4	11.336996	I-20 WB (Basic Analysis)	SW
9055	5	11.933598	I-20 WB (Basic Analysis)	SW
9055	6	11.724359	I-20 WB (Basic Analysis)	SW
9055	7	12.166172	I-20 WB (Basic Analysis)	SW
9055	8	12.152948	I-20 WB (Basic Analysis)	SW
9055	9	12.159171	I-20 WB (Basic Analysis)	SW
9055	10	12.101611	I-20 WB (Basic Analysis)	SW
9059	1	111.860026	I-20 WB (Merge Analysis)	SW
9059	2	97.411191	I-20 WB (Merge Analysis)	SW
9059	3	93.526113	I-20 WB (Merge Analysis)	SW
9059	4	91.490572	I-20 WB (Merge Analysis)	SW
9059	5	64.526666	I-20 WB (Merge Analysis)	SW
9059	6	81.474304	I-20 WB (Merge Analysis)	SW
9059	7	107.301115	I-20 WB (Merge Analysis)	SW
9059	8	105.114662	I-20 WB (Merge Analysis)	SW
9059	9	95.273872	I-20 WB (Merge Analysis)	SW
9059	10	72.233648	I-20 WB (Merge Analysis)	SW
9061	1	16.754672	I-20 EB (Basic Analysis)	NE
9061	2	16.145784	I-20 EB (Basic Analysis)	NE
9061	3	16.558727	I-20 EB (Basic Analysis)	NE
9061	4	16.101429	I-20 EB (Basic Analysis)	NE
9061	5	15.866464	I-20 EB (Basic Analysis)	NE
9061	6	16.499214	I-20 EB (Basic Analysis)	NE
9061	7	16.573606	I-20 EB (Basic Analysis)	NE
9061	8	16.484336	I-20 EB (Basic Analysis)	NE
9061	9	16.097499	I-20 EB (Basic Analysis)	NE
9061	10	16.002615	I-20 EB (Basic Analysis)	NE
9063	1	38.469174	I-26 WB (Basic Analysis)	NW
9063	2	38.827614	I-26 WB (Basic Analysis)	NW
9063	3	38.754598	I-26 WB (Basic Analysis)	NW
9063	4	39.916207	I-26 WB (Basic Analysis)	NW
9063	5	38.42271	I-26 WB (Basic Analysis)	NW
9063	6	38.70924	I-26 WB (Basic Analysis)	NW
9063	7	38.889566	I-26 WB (Basic Analysis)	NW
9063	8	37.583033	I-26 WB (Basic Analysis)	NW
9063	9	38.26451	I-26 WB (Basic Analysis)	NW
9063	10	39.02564	I-26 WB (Basic Analysis)	NW
9064	1	56.240783	I-26 WB (Diverge Analysis)	NW
9064	2	39.291988	I-26 WB (Diverge Analysis)	NW
9064	3	41.946654	I-26 WB (Diverge Analysis)	NW
9064	4	64.037581	I-26 WB (Diverge Analysis)	NW
9064	5	56.69545	I-26 WB (Diverge Analysis)	NW
9064	6	57.877583	I-26 WB (Diverge Analysis)	NW
9064	7	37.974922	I-26 WB (Diverge Analysis)	NW
9064	8	37.881055	I-26 WB (Diverge Analysis)	NW
9064	9	37.895722	I-26 WB (Diverge Analysis)	NW
9064	10	38.579188	I-26 WB (Diverge Analysis)	NW
9067	1	21.902689	I-26 EB (Merge Analysis)	SW
9067	2	22.156284	I-26 EB (Merge Analysis)	SW
9067	3	23.668861	I-26 EB (Merge Analysis)	SW
9067	4	21.41888	I-26 EB (Merge Analysis)	SW
9067	5	22.003407	I-26 EB (Merge Analysis)	SW
9067	6	23.712026	I-26 EB (Merge Analysis)	SW
9067	7	22.658078	I-26 EB (Merge Analysis)	SW
9067	8	22.713833	I-26 EB (Merge Analysis)	SW

RPA AM

ID	Run	Density	Name (Type)	Direction
9067	9	23.165268	I-26 EB (Merge Analysis)	SW
9067	10	22.938651	I-26 EB (Merge Analysis)	SW
9089	1	16.645685	I-26 EB (Diverge Analysis)	SE
9089	2	17.337952	I-26 EB (Diverge Analysis)	SE
9089	3	17.134574	I-26 EB (Diverge Analysis)	SE
9089	4	17.203018	I-26 EB (Diverge Analysis)	SE
9089	5	17.165863	I-26 EB (Diverge Analysis)	SE
9089	6	18.579729	I-26 EB (Diverge Analysis)	SE
9089	7	17.66844	I-26 EB (Diverge Analysis)	SE
9089	8	17.969596	I-26 EB (Diverge Analysis)	SE
9089	9	17.558929	I-26 EB (Diverge Analysis)	SE
9089	10	17.212796	I-26 EB (Diverge Analysis)	SE
9110	1	21.902689	I-26 EB (Merge Analysis)	SW
9110	2	22.156284	I-26 EB (Merge Analysis)	SW
9110	3	23.668861	I-26 EB (Merge Analysis)	SW
9110	4	21.41888	I-26 EB (Merge Analysis)	SW
9110	5	22.003407	I-26 EB (Merge Analysis)	SW
9110	6	23.712026	I-26 EB (Merge Analysis)	SW
9110	7	22.658078	I-26 EB (Merge Analysis)	SW
9110	8	22.713833	I-26 EB (Merge Analysis)	SW
9110	9	23.165268	I-26 EB (Merge Analysis)	SW
9110	10	22.938651	I-26 EB (Merge Analysis)	SW
9111	1	21.639867	(Merge Analysis)	SE
9111	2	20.761098	(Merge Analysis)	SE
9111	3	21.683063	(Merge Analysis)	SE
9111	4	21.476532	(Merge Analysis)	SE
9111	5	21.06752	(Merge Analysis)	SE
9111	6	22.024582	(Merge Analysis)	SE
9111	7	22.233813	(Merge Analysis)	SE
9111	8	21.863947	(Merge Analysis)	SE
9111	9	22.479491	(Merge Analysis)	SE
9111	10	21.195758	(Merge Analysis)	SE
9112	1	14.101103	I-26 EB (Basic Analysis)	S
9112	2	15.384589	I-26 EB (Basic Analysis)	S
9112	3	15.429418	I-26 EB (Basic Analysis)	S
9112	4	14.744058	I-26 EB (Basic Analysis)	S
9112	5	15.146497	I-26 EB (Basic Analysis)	S
9112	6	15.374947	I-26 EB (Basic Analysis)	S
9112	7	15.441644	I-26 EB (Basic Analysis)	S
9112	8	15.053203	I-26 EB (Basic Analysis)	S
9112	9	15.539747	I-26 EB (Basic Analysis)	S
9112	10	14.821482	I-26 EB (Basic Analysis)	S
9113	1	18.02202	I-126 NB (Merge+Diverge Analysis)	NW
9113	2	16.156583	I-126 NB (Merge+Diverge Analysis)	NW
9113	3	14.888718	I-126 NB (Merge+Diverge Analysis)	NW
9113	4	16.450626	I-126 NB (Merge+Diverge Analysis)	NW
9113	5	15.328202	I-126 NB (Merge+Diverge Analysis)	NW
9113	6	16.333641	I-126 NB (Merge+Diverge Analysis)	NW
9113	7	16.586582	I-126 NB (Merge+Diverge Analysis)	NW
9113	8	15.928936	I-126 NB (Merge+Diverge Analysis)	NW
9113	9	16.374744	I-126 NB (Merge+Diverge Analysis)	NW
9113	10	15.909965	I-126 NB (Merge+Diverge Analysis)	NW
9114	1	23.68797	I-126 NB (Diverge Analysis)	NW
9114	2	23.850087	I-126 NB (Diverge Analysis)	NW
9114	3	23.277022	I-126 NB (Diverge Analysis)	NW
9114	4	23.224239	I-126 NB (Diverge Analysis)	NW
9114	5	23.498205	I-126 NB (Diverge Analysis)	NW

RPA AM

ID	Run	Density	Name (Type)	Direction
9114	6	23.505745	I-126 NB (Diverge Analysis)	NW
9114	7	22.819575	I-126 NB (Diverge Analysis)	NW
9114	8	23.798562	I-126 NB (Diverge Analysis)	NW
9114	9	24.190659	I-126 NB (Diverge Analysis)	NW
9114	10	23.111134	I-126 NB (Diverge Analysis)	NW
9115	1	21.902689	I-26 EB (Merge Analysis)	SW
9115	2	22.156284	I-26 EB (Merge Analysis)	SW
9115	3	23.668861	I-26 EB (Merge Analysis)	SW
9115	4	21.41888	I-26 EB (Merge Analysis)	SW
9115	5	22.003407	I-26 EB (Merge Analysis)	SW
9115	6	23.712026	I-26 EB (Merge Analysis)	SW
9115	7	22.658078	I-26 EB (Merge Analysis)	SW
9115	8	22.713833	I-26 EB (Merge Analysis)	SW
9115	9	23.165268	I-26 EB (Merge Analysis)	SW
9115	10	22.938651	I-26 EB (Merge Analysis)	SW
9118	1	15.001137	I-26 EB (Diverge Analysis)	SE
9118	2	15.512903	I-26 EB (Diverge Analysis)	SE
9118	3	15.687369	I-26 EB (Diverge Analysis)	SE
9118	4	16.335799	I-26 EB (Diverge Analysis)	SE
9118	5	17.685	I-26 EB (Diverge Analysis)	SE
9118	6	15.091278	I-26 EB (Diverge Analysis)	SE
9118	7	16.01013	I-26 EB (Diverge Analysis)	SE
9118	8	14.532988	I-26 EB (Diverge Analysis)	SE
9118	9	16.891182	I-26 EB (Diverge Analysis)	SE
9118	10	15.521626	I-26 EB (Diverge Analysis)	SE
9119	1	12.65462	I-26 EB (Diverge Analysis)	SE
9119	2	14.266116	I-26 EB (Diverge Analysis)	SE
9119	3	12.648373	I-26 EB (Diverge Analysis)	SE
9119	4	12.4714	I-26 EB (Diverge Analysis)	SE
9119	5	13.000238	I-26 EB (Diverge Analysis)	SE
9119	6	13.853873	I-26 EB (Diverge Analysis)	SE
9119	7	13.325035	I-26 EB (Diverge Analysis)	SE
9119	8	13.699802	I-26 EB (Diverge Analysis)	SE
9119	9	13.868447	I-26 EB (Diverge Analysis)	SE
9119	10	11.413726	I-26 EB (Diverge Analysis)	SE
9120	1	16.542313	I-26 EB (Diverge Analysis)	SE
9120	2	18.738499	I-26 EB (Diverge Analysis)	SE
9120	3	16.674999	I-26 EB (Diverge Analysis)	SE
9120	4	16.681862	I-26 EB (Diverge Analysis)	SE
9120	5	18.260371	I-26 EB (Diverge Analysis)	SE
9120	6	17.013578	I-26 EB (Diverge Analysis)	SE
9120	7	18.045328	I-26 EB (Diverge Analysis)	SE
9120	8	17.754791	I-26 EB (Diverge Analysis)	SE
9120	9	17.789106	I-26 EB (Diverge Analysis)	SE
9120	10	15.757634	I-26 EB (Diverge Analysis)	SE
9121	1	22.540124	I-26 EB (Basic Analysis)	SE
9121	2	26.078577	I-26 EB (Basic Analysis)	SE
9121	3	25.060857	I-26 EB (Basic Analysis)	SE
9121	4	27.198749	I-26 EB (Basic Analysis)	SE
9121	5	27.256707	I-26 EB (Basic Analysis)	SE
9121	6	27.17824	I-26 EB (Basic Analysis)	SE
9121	7	27.298403	I-26 EB (Basic Analysis)	SE
9121	8	25.608152	I-26 EB (Basic Analysis)	SE
9121	9	24.700691	I-26 EB (Basic Analysis)	SE
9121	10	26.515961	I-26 EB (Basic Analysis)	SE
9122	1	21.86506	I-26 EB (Diverge Analysis)	SE
9122	2	23.164526	I-26 EB (Diverge Analysis)	SE

RPA AM

ID	Run	Density	Name (Type)	Direction
9122	3	22.686393	I-26 EB (Diverge Analysis)	SE
9122	4	22.431193	I-26 EB (Diverge Analysis)	SE
9122	5	24.895193	I-26 EB (Diverge Analysis)	SE
9122	6	24.150126	I-26 EB (Diverge Analysis)	SE
9122	7	23.29066	I-26 EB (Diverge Analysis)	SE
9122	8	22.967993	I-26 EB (Diverge Analysis)	SE
9122	9	22.17306	I-26 EB (Diverge Analysis)	SE
9122	10	22.61306	I-26 EB (Diverge Analysis)	SE
9123	1	21.581052	I-26 EB (Weaving Analysis)	SE
9123	2	24.075518	I-26 EB (Weaving Analysis)	SE
9123	3	23.178138	I-26 EB (Weaving Analysis)	SE
9123	4	23.483279	I-26 EB (Weaving Analysis)	SE
9123	5	23.702133	I-26 EB (Weaving Analysis)	SE
9123	6	24.743062	I-26 EB (Weaving Analysis)	SE
9123	7	24.172787	I-26 EB (Weaving Analysis)	SE
9123	8	22.486277	I-26 EB (Weaving Analysis)	SE
9123	9	23.644086	I-26 EB (Weaving Analysis)	SE
9123	10	23.276191	I-26 EB (Weaving Analysis)	SE
9125	1	19.794462	I-26 EB (Basic Analysis)	SE
9125	2	20.73978	I-26 EB (Basic Analysis)	SE
9125	3	19.880775	I-26 EB (Basic Analysis)	SE
9125	4	20.397924	I-26 EB (Basic Analysis)	SE
9125	5	19.663054	I-26 EB (Basic Analysis)	SE
9125	6	20.76548	I-26 EB (Basic Analysis)	SE
9125	7	20.262878	I-26 EB (Basic Analysis)	SE
9125	8	19.787189	I-26 EB (Basic Analysis)	SE
9125	9	20.481085	I-26 EB (Basic Analysis)	SE
9125	10	19.922719	I-26 EB (Basic Analysis)	SE
9126	1	19.794462	I-26 EB (Basic Analysis)	SE
9126	2	20.73978	I-26 EB (Basic Analysis)	SE
9126	3	19.880775	I-26 EB (Basic Analysis)	SE
9126	4	20.397924	I-26 EB (Basic Analysis)	SE
9126	5	19.663054	I-26 EB (Basic Analysis)	SE
9126	6	20.76548	I-26 EB (Basic Analysis)	SE
9126	7	20.262878	I-26 EB (Basic Analysis)	SE
9126	8	19.787189	I-26 EB (Basic Analysis)	SE
9126	9	20.481085	I-26 EB (Basic Analysis)	SE
9126	10	19.922719	I-26 EB (Basic Analysis)	SE
9127	1	25.659435	I-26 EB (Basic Analysis)	SE
9127	2	26.191129	I-26 EB (Basic Analysis)	SE
9127	3	25.824887	I-26 EB (Basic Analysis)	SE
9127	4	27.310737	I-26 EB (Basic Analysis)	SE
9127	5	25.460251	I-26 EB (Basic Analysis)	SE
9127	6	27.787816	I-26 EB (Basic Analysis)	SE
9127	7	28.338785	I-26 EB (Basic Analysis)	SE
9127	8	26.57504	I-26 EB (Basic Analysis)	SE
9127	9	28.973283	I-26 EB (Basic Analysis)	SE
9127	10	26.941282	I-26 EB (Basic Analysis)	SE
9128	1	23.049299	I-26 EB (Diverge Analysis)	SW
9128	2	23.051909	I-26 EB (Diverge Analysis)	SW
9128	3	24.670226	I-26 EB (Diverge Analysis)	SW
9128	4	21.97423	I-26 EB (Diverge Analysis)	SW
9128	5	23.579775	I-26 EB (Diverge Analysis)	SW
9128	6	24.576044	I-26 EB (Diverge Analysis)	SW
9128	7	24.516218	I-26 EB (Diverge Analysis)	SW
9128	8	23.866016	I-26 EB (Diverge Analysis)	SW
9128	9	24.589504	I-26 EB (Diverge Analysis)	SW

RPA AM

ID	Run	Density	Name (Type)	Direction
9128	10	23.856726	I-26 EB (Diverge Analysis)	SW
9130	1	21.639867	(Merge Analysis)	SE
9130	2	20.761098	(Merge Analysis)	SE
9130	3	21.683063	(Merge Analysis)	SE
9130	4	21.476532	(Merge Analysis)	SE
9130	5	21.06752	(Merge Analysis)	SE
9130	6	22.024582	(Merge Analysis)	SE
9130	7	22.233813	(Merge Analysis)	SE
9130	8	21.863947	(Merge Analysis)	SE
9130	9	22.479491	(Merge Analysis)	SE
9130	10	21.195758	(Merge Analysis)	SE
9131	1	10.033219	(Diverge Analysis)	SE
9131	2	11.131193	(Diverge Analysis)	SE
9131	3	9.698293	(Diverge Analysis)	SE
9131	4	10.770056	(Diverge Analysis)	SE
9131	5	10.810829	(Diverge Analysis)	SE
9131	6	11.16323	(Diverge Analysis)	SE
9131	7	10.630261	(Diverge Analysis)	SE
9131	8	11.014697	(Diverge Analysis)	SE
9131	9	11.448645	(Diverge Analysis)	SE
9131	10	11.731148	(Diverge Analysis)	SE
9132	1	13.602256	I-126 SB (Diverge Analysis)	E
9132	2	14.497577	I-126 SB (Diverge Analysis)	E
9132	3	13.597901	I-126 SB (Diverge Analysis)	E
9132	4	14.993949	I-126 SB (Diverge Analysis)	E
9132	5	13.983753	I-126 SB (Diverge Analysis)	E
9132	6	23.285896	I-126 SB (Diverge Analysis)	E
9132	7	15.335563	I-126 SB (Diverge Analysis)	E
9132	8	19.344132	I-126 SB (Diverge Analysis)	E
9132	9	14.119864	I-126 SB (Diverge Analysis)	E
9132	10	19.67362	I-126 SB (Diverge Analysis)	E
9133	1	30.862155	I-126 NB (Basic Analysis)	W
9133	2	31.702993	I-126 NB (Basic Analysis)	W
9133	3	31.28852	I-126 NB (Basic Analysis)	W
9133	4	30.291405	I-126 NB (Basic Analysis)	W
9133	5	30.569136	I-126 NB (Basic Analysis)	W
9133	6	31.015884	I-126 NB (Basic Analysis)	W
9133	7	31.032871	I-126 NB (Basic Analysis)	W
9133	8	31.043063	I-126 NB (Basic Analysis)	W
9133	9	31.013336	I-126 NB (Basic Analysis)	W
9133	10	30.757687	I-126 NB (Basic Analysis)	W
9134	1	31.600791	I-126 NB (Diverge Analysis)	W
9134	2	34.08239	I-126 NB (Diverge Analysis)	W
9134	3	32.54239	I-126 NB (Diverge Analysis)	W
9134	4	32.381057	I-126 NB (Diverge Analysis)	W
9134	5	33.041057	I-126 NB (Diverge Analysis)	W
9134	6	33.98559	I-126 NB (Diverge Analysis)	W
9134	7	32.562924	I-126 NB (Diverge Analysis)	W
9134	8	31.949857	I-126 NB (Diverge Analysis)	W
9134	9	32.25199	I-126 NB (Diverge Analysis)	W
9134	10	32.187457	I-126 NB (Diverge Analysis)	W
9135	1	31.756759	I-126 NB (Basic Analysis)	NW
9135	2	30.883199	I-126 NB (Basic Analysis)	NW
9135	3	31.020357	I-126 NB (Basic Analysis)	NW
9135	4	31.332225	I-126 NB (Basic Analysis)	NW
9135	5	31.307733	I-126 NB (Basic Analysis)	NW
9135	6	30.946879	I-126 NB (Basic Analysis)	NW

RPA AM

ID	Run	Density	Name (Type)	Direction
9135	7	30.680729	I-126 NB (Basic Analysis)	NW
9135	8	31.678384	I-126 NB (Basic Analysis)	NW
9135	9	31.701243	I-126 NB (Basic Analysis)	NW
9135	10	30.817886	I-126 NB (Basic Analysis)	NW
9136	1	31.756759	I-126 NB (Basic Analysis)	NW
9136	2	30.883199	I-126 NB (Basic Analysis)	NW
9136	3	31.020357	I-126 NB (Basic Analysis)	NW
9136	4	31.332225	I-126 NB (Basic Analysis)	NW
9136	5	31.307733	I-126 NB (Basic Analysis)	NW
9136	6	30.946879	I-126 NB (Basic Analysis)	NW
9136	7	30.680729	I-126 NB (Basic Analysis)	NW
9136	8	31.678384	I-126 NB (Basic Analysis)	NW
9136	9	31.701243	I-126 NB (Basic Analysis)	NW
9136	10	30.817886	I-126 NB (Basic Analysis)	NW
9137	1	33.025391	I-26 WB (Diverge Analysis)	N
9137	2	32.338997	I-26 WB (Diverge Analysis)	N
9137	3	32.943824	I-26 WB (Diverge Analysis)	N
9137	4	32.800697	I-26 WB (Diverge Analysis)	N
9137	5	32.249735	I-26 WB (Diverge Analysis)	N
9137	6	32.163551	I-26 WB (Diverge Analysis)	N
9137	7	32.648336	I-26 WB (Diverge Analysis)	N
9137	8	31.935779	I-26 WB (Diverge Analysis)	N
9137	9	33.223921	I-26 WB (Diverge Analysis)	N
9137	10	32.128154	I-26 WB (Diverge Analysis)	N
9138	1	19.956095	I-26 WB (Basic Analysis)	N
9138	2	20.214651	I-26 WB (Basic Analysis)	N
9138	3	20.250431	I-26 WB (Basic Analysis)	N
9138	4	20.511687	I-26 WB (Basic Analysis)	N
9138	5	20.74054	I-26 WB (Basic Analysis)	N
9138	6	20.453293	I-26 WB (Basic Analysis)	N
9138	7	20.064446	I-26 WB (Basic Analysis)	N
9138	8	19.681674	I-26 WB (Basic Analysis)	N
9138	9	20.352706	I-26 WB (Basic Analysis)	N
9138	10	20.388485	I-26 WB (Basic Analysis)	N
9139	1	19.956095	I-26 WB (Basic Analysis)	N
9139	2	20.214651	I-26 WB (Basic Analysis)	N
9139	3	20.250431	I-26 WB (Basic Analysis)	N
9139	4	20.511687	I-26 WB (Basic Analysis)	N
9139	5	20.74054	I-26 WB (Basic Analysis)	N
9139	6	20.453293	I-26 WB (Basic Analysis)	N
9139	7	20.064446	I-26 WB (Basic Analysis)	N
9139	8	19.681674	I-26 WB (Basic Analysis)	N
9139	9	20.352706	I-26 WB (Basic Analysis)	N
9139	10	20.388485	I-26 WB (Basic Analysis)	N
9140	1	23.435954	I-26 WB (Basic Analysis)	NW
9140	2	23.461335	I-26 WB (Basic Analysis)	NW
9140	3	22.727514	I-26 WB (Basic Analysis)	NW
9140	4	23.367381	I-26 WB (Basic Analysis)	NW
9140	5	23.411018	I-26 WB (Basic Analysis)	NW
9140	6	23.644345	I-26 WB (Basic Analysis)	NW
9140	7	23.419033	I-26 WB (Basic Analysis)	NW
9140	8	23.283668	I-26 WB (Basic Analysis)	NW
9140	9	23.3892	I-26 WB (Basic Analysis)	NW
9140	10	23.297027	I-26 WB (Basic Analysis)	NW
9141	1	23.435954	I-26 WB (Basic Analysis)	NW
9141	2	23.461335	I-26 WB (Basic Analysis)	NW
9141	3	22.727514	I-26 WB (Basic Analysis)	NW

RPA AM

ID	Run	Density	Name (Type)	Direction
9141	4	23.367381	I-26 WB (Basic Analysis)	NW
9141	5	23.411018	I-26 WB (Basic Analysis)	NW
9141	6	23.644345	I-26 WB (Basic Analysis)	NW
9141	7	23.419033	I-26 WB (Basic Analysis)	NW
9141	8	23.283668	I-26 WB (Basic Analysis)	NW
9141	9	23.3892	I-26 WB (Basic Analysis)	NW
9141	10	23.297027	I-26 WB (Basic Analysis)	NW
9142	1	54.945739	I-26 WB (Basic Analysis)	NW
9142	2	56.785716	I-26 WB (Basic Analysis)	NW
9142	3	55.430251	I-26 WB (Basic Analysis)	NW
9142	4	52.484744	I-26 WB (Basic Analysis)	NW
9142	5	54.509985	I-26 WB (Basic Analysis)	NW
9142	6	56.457981	I-26 WB (Basic Analysis)	NW
9142	7	56.50674	I-26 WB (Basic Analysis)	NW
9142	8	56.577081	I-26 WB (Basic Analysis)	NW
9142	9	58.612672	I-26 WB (Basic Analysis)	NW
9142	10	50.353349	I-26 WB (Basic Analysis)	NW
9143	1	45.422006	I-26 WB (Basic Analysis)	NW
9143	2	46.236181	I-26 WB (Basic Analysis)	NW
9143	3	45.366349	I-26 WB (Basic Analysis)	NW
9143	4	53.399701	I-26 WB (Basic Analysis)	NW
9143	5	46.89025	I-26 WB (Basic Analysis)	NW
9143	6	49.427061	I-26 WB (Basic Analysis)	NW
9143	7	45.989272	I-26 WB (Basic Analysis)	NW
9143	8	44.138725	I-26 WB (Basic Analysis)	NW
9143	9	46.319976	I-26 WB (Basic Analysis)	NW
9143	10	44.510196	I-26 WB (Basic Analysis)	NW
9147	1	40.911476	I-26 WB (Basic Analysis)	NW
9147	2	39.298155	I-26 WB (Basic Analysis)	NW
9147	3	43.881797	I-26 WB (Basic Analysis)	NW
9147	4	39.657076	I-26 WB (Basic Analysis)	NW
9147	5	42.070751	I-26 WB (Basic Analysis)	NW
9147	6	40.922482	I-26 WB (Basic Analysis)	NW
9147	7	47.336353	I-26 WB (Basic Analysis)	NW
9147	8	42.832021	I-26 WB (Basic Analysis)	NW
9147	9	40.94237	I-26 WB (Basic Analysis)	NW
9147	10	46.76004	I-26 WB (Basic Analysis)	NW
9148	1	41.189854	I-26 WB (Diverge Analysis)	NW
9148	2	39.233322	I-26 WB (Diverge Analysis)	NW
9148	3	44.234654	I-26 WB (Diverge Analysis)	NW
9148	4	39.758388	I-26 WB (Diverge Analysis)	NW
9148	5	42.119721	I-26 WB (Diverge Analysis)	NW
9148	6	40.884788	I-26 WB (Diverge Analysis)	NW
9148	7	47.329319	I-26 WB (Diverge Analysis)	NW
9148	8	42.864787	I-26 WB (Diverge Analysis)	NW
9148	9	41.406921	I-26 WB (Diverge Analysis)	NW
9148	10	43.093587	I-26 WB (Diverge Analysis)	NW
9149	1	23.175964	I-26 WB (Diverge Analysis)	NW
9149	2	23.647485	I-26 WB (Diverge Analysis)	NW
9149	3	24.685783	I-26 WB (Diverge Analysis)	NW
9149	4	23.183108	I-26 WB (Diverge Analysis)	NW
9149	5	25.640732	I-26 WB (Diverge Analysis)	NW
9149	6	24.400013	I-26 WB (Diverge Analysis)	NW
9149	7	24.504795	I-26 WB (Diverge Analysis)	NW
9149	8	23.711783	I-26 WB (Diverge Analysis)	NW
9149	9	25.82172	I-26 WB (Diverge Analysis)	NW
9149	10	24.750082	I-26 WB (Diverge Analysis)	NW

RPA AM

ID	Run	Density	Name (Type)	Direction
9151	1	20.271454	I-20 EB (Diverge Analysis)	NE
9151	2	19.339286	I-20 EB (Diverge Analysis)	NE
9151	3	19.73568	I-20 EB (Diverge Analysis)	NE
9151	4	18.391301	I-20 EB (Diverge Analysis)	NE
9151	5	18.975512	I-20 EB (Diverge Analysis)	NE
9151	6	18.516842	I-20 EB (Diverge Analysis)	NE
9151	7	19.139606	I-20 EB (Diverge Analysis)	NE
9151	8	19.689219	I-20 EB (Diverge Analysis)	NE
9151	9	18.761993	I-20 EB (Diverge Analysis)	NE
9151	10	19.657587	I-20 EB (Diverge Analysis)	NE
9152	1	16.754672	I-20 EB (Basic Analysis)	NE
9152	2	16.145784	I-20 EB (Basic Analysis)	NE
9152	3	16.558727	I-20 EB (Basic Analysis)	NE
9152	4	16.101429	I-20 EB (Basic Analysis)	NE
9152	5	15.866464	I-20 EB (Basic Analysis)	NE
9152	6	16.499214	I-20 EB (Basic Analysis)	NE
9152	7	16.573606	I-20 EB (Basic Analysis)	NE
9152	8	16.484336	I-20 EB (Basic Analysis)	NE
9152	9	16.097499	I-20 EB (Basic Analysis)	NE
9152	10	16.002615	I-20 EB (Basic Analysis)	NE
9153	1	16.754672	I-20 EB (Basic Analysis)	NE
9153	2	16.145784	I-20 EB (Basic Analysis)	NE
9153	3	16.558727	I-20 EB (Basic Analysis)	NE
9153	4	16.101429	I-20 EB (Basic Analysis)	NE
9153	5	15.866464	I-20 EB (Basic Analysis)	NE
9153	6	16.499214	I-20 EB (Basic Analysis)	NE
9153	7	16.573606	I-20 EB (Basic Analysis)	NE
9153	8	16.484336	I-20 EB (Basic Analysis)	NE
9153	9	16.097499	I-20 EB (Basic Analysis)	NE
9153	10	16.002615	I-20 EB (Basic Analysis)	NE
9155	1	38.145301	I-20 EB (Basic Analysis)	NE
9155	2	38.21376	I-20 EB (Basic Analysis)	NE
9155	3	35.69342	I-20 EB (Basic Analysis)	NE
9155	4	36.059237	I-20 EB (Basic Analysis)	NE
9155	5	37.390883	I-20 EB (Basic Analysis)	NE
9155	6	37.275152	I-20 EB (Basic Analysis)	NE
9155	7	37.98798	I-20 EB (Basic Analysis)	NE
9155	8	36.345593	I-20 EB (Basic Analysis)	NE
9155	9	37.245972	I-20 EB (Basic Analysis)	NE
9155	10	36.431462	I-20 EB (Basic Analysis)	NE
9156	1	35.829193	I-20 EB (Basic Analysis)	NE
9156	2	35.7091	I-20 EB (Basic Analysis)	NE
9156	3	34.097577	I-20 EB (Basic Analysis)	NE
9156	4	34.782338	I-20 EB (Basic Analysis)	NE
9156	5	35.510152	I-20 EB (Basic Analysis)	NE
9156	6	35.845961	I-20 EB (Basic Analysis)	NE
9156	7	35.815598	I-20 EB (Basic Analysis)	NE
9156	8	35.662875	I-20 EB (Basic Analysis)	NE
9156	9	34.946844	I-20 EB (Basic Analysis)	NE
9156	10	35.10138	I-20 EB (Basic Analysis)	NE
9157	1	73.890644	I-20 WB (Diverge Analysis)	SW
9157	2	67.891979	I-20 WB (Diverge Analysis)	SW
9157	3	70.672779	I-20 WB (Diverge Analysis)	SW
9157	4	75.694644	I-20 WB (Diverge Analysis)	SW
9157	5	73.259978	I-20 WB (Diverge Analysis)	SW
9157	6	70.731445	I-20 WB (Diverge Analysis)	SW
9157	7	72.060245	I-20 WB (Diverge Analysis)	SW

RPA AM

ID	Run	Density	Name (Type)	Direction
9157	8	71.564512	I-20 WB (Diverge Analysis)	SW
9157	9	73.875978	I-20 WB (Diverge Analysis)	SW
9157	10	72.318379	I-20 WB (Diverge Analysis)	SW
9158	1	39.097776	I-20 WB (Basic Analysis)	SW
9158	2	39.726475	I-20 WB (Basic Analysis)	SW
9158	3	37.389193	I-20 WB (Basic Analysis)	SW
9158	4	38.513346	I-20 WB (Basic Analysis)	SW
9158	5	38.779105	I-20 WB (Basic Analysis)	SW
9158	6	40.170337	I-20 WB (Basic Analysis)	SW
9158	7	38.46213	I-20 WB (Basic Analysis)	SW
9158	8	38.991124	I-20 WB (Basic Analysis)	SW
9158	9	38.022282	I-20 WB (Basic Analysis)	SW
9158	10	37.818311	I-20 WB (Basic Analysis)	SW
9159	1	11.815463	I-20 WB (Basic Analysis)	W
9159	2	11.92464	I-20 WB (Basic Analysis)	W
9159	3	12.139344	I-20 WB (Basic Analysis)	W
9159	4	11.899137	I-20 WB (Basic Analysis)	W
9159	5	12.336188	I-20 WB (Basic Analysis)	W
9159	6	13.119491	I-20 WB (Basic Analysis)	W
9159	7	13.169798	I-20 WB (Basic Analysis)	W
9159	8	12.482566	I-20 WB (Basic Analysis)	W
9159	9	13.440172	I-20 WB (Basic Analysis)	W
9159	10	12.066291	I-20 WB (Basic Analysis)	W
9160	1	133.556309	I-20 WB (Merge Analysis)	SW
9160	2	119.193278	I-20 WB (Merge Analysis)	SW
9160	3	120.174013	I-20 WB (Merge Analysis)	SW
9160	4	124.353063	I-20 WB (Merge Analysis)	SW
9160	5	104.333099	I-20 WB (Merge Analysis)	SW
9160	6	106.990576	I-20 WB (Merge Analysis)	SW
9160	7	132.10705	I-20 WB (Merge Analysis)	SW
9160	8	127.369087	I-20 WB (Merge Analysis)	SW
9160	9	121.923067	I-20 WB (Merge Analysis)	SW
9160	10	106.253895	I-20 WB (Merge Analysis)	SW
9162	1	14.918182	I-20 WB (Merge Analysis)	SW
9162	2	16.260867	I-20 WB (Merge Analysis)	SW
9162	3	16.584964	I-20 WB (Merge Analysis)	SW
9162	4	16.701931	I-20 WB (Merge Analysis)	SW
9162	5	16.03668	I-20 WB (Merge Analysis)	SW
9162	6	15.987944	I-20 WB (Merge Analysis)	SW
9162	7	16.333972	I-20 WB (Merge Analysis)	SW
9162	8	16.217004	I-20 WB (Merge Analysis)	SW
9162	9	15.641916	I-20 WB (Merge Analysis)	SW
9162	10	16.372961	I-20 WB (Merge Analysis)	SW
9163	1	19.32405	I-20 WB (Merge Analysis)	S
9163	2	19.52454	I-20 WB (Merge Analysis)	S
9163	3	18.7475	I-20 WB (Merge Analysis)	S
9163	4	19.233433	I-20 WB (Merge Analysis)	S
9163	5	20.024065	I-20 WB (Merge Analysis)	S
9163	6	19.267414	I-20 WB (Merge Analysis)	S
9163	7	18.746367	I-20 WB (Merge Analysis)	S
9163	8	20.227953	I-20 WB (Merge Analysis)	S
9163	9	18.713519	I-20 WB (Merge Analysis)	S
9163	10	19.868884	I-20 WB (Merge Analysis)	S
9182	1	13.019636	I-26 EB (Merge Analysis)	S
9182	2	12.892708	I-26 EB (Merge Analysis)	S
9182	3	13.017897	I-26 EB (Merge Analysis)	S
9182	4	12.276327	I-26 EB (Merge Analysis)	S

RPA AM

ID	Run	Density	Name (Type)	Direction
9182	5	12.950956	I-26 EB (Merge Analysis)	S
9182	6	13.287401	I-26 EB (Merge Analysis)	S
9182	7	13.388247	I-26 EB (Merge Analysis)	S
9182	8	13.083969	I-26 EB (Merge Analysis)	S
9182	9	13.609066	I-26 EB (Merge Analysis)	S
9182	10	13.0405	I-26 EB (Merge Analysis)	S
9183	1	11.753813	I-20 EB (Basic Analysis)	E
9183	2	10.622812	I-20 EB (Basic Analysis)	E
9183	3	10.823741	I-20 EB (Basic Analysis)	E
9183	4	10.534776	I-20 EB (Basic Analysis)	E
9183	5	10.940259	I-20 EB (Basic Analysis)	E
9183	6	11.144295	I-20 EB (Basic Analysis)	E
9183	7	11.025705	I-20 EB (Basic Analysis)	E
9183	8	10.947509	I-20 EB (Basic Analysis)	E
9183	9	10.882259	I-20 EB (Basic Analysis)	E
9183	10	10.642491	I-20 EB (Basic Analysis)	E
9185	1	125.722346	I-20 WB (Basic Analysis)	SW
9185	2	118.748204	I-20 WB (Basic Analysis)	SW
9185	3	120.892438	I-20 WB (Basic Analysis)	SW
9185	4	126.387631	I-20 WB (Basic Analysis)	SW
9185	5	110.638265	I-20 WB (Basic Analysis)	SW
9185	6	116.58289	I-20 WB (Basic Analysis)	SW
9185	7	128.040756	I-20 WB (Basic Analysis)	SW
9185	8	122.769327	I-20 WB (Basic Analysis)	SW
9185	9	119.397517	I-20 WB (Basic Analysis)	SW
9185	10	114.442693	I-20 WB (Basic Analysis)	SW
9186	1	125.722346	I-20 WB (Basic Analysis)	SW
9186	2	118.748204	I-20 WB (Basic Analysis)	SW
9186	3	120.892438	I-20 WB (Basic Analysis)	SW
9186	4	126.387631	I-20 WB (Basic Analysis)	SW
9186	5	110.638265	I-20 WB (Basic Analysis)	SW
9186	6	116.58289	I-20 WB (Basic Analysis)	SW
9186	7	128.040756	I-20 WB (Basic Analysis)	SW
9186	8	122.769327	I-20 WB (Basic Analysis)	SW
9186	9	119.397517	I-20 WB (Basic Analysis)	SW
9186	10	114.442693	I-20 WB (Basic Analysis)	SW
9204	1	29.492144	CD ROAD I-26 EB (Basic Analysis)	SE
9204	2	30.662125	CD ROAD I-26 EB (Basic Analysis)	SE
9204	3	29.246182	CD ROAD I-26 EB (Basic Analysis)	SE
9204	4	28.917126	CD ROAD I-26 EB (Basic Analysis)	SE
9204	5	29.222916	CD ROAD I-26 EB (Basic Analysis)	SE
9204	6	31.149062	CD ROAD I-26 EB (Basic Analysis)	SE
9204	7	28.905492	CD ROAD I-26 EB (Basic Analysis)	SE
9204	8	28.011388	CD ROAD I-26 EB (Basic Analysis)	SE
9204	9	28.844002	CD ROAD I-26 EB (Basic Analysis)	SE
9204	10	28.300559	CD ROAD I-26 EB (Basic Analysis)	SE
9206	1	14.101103	I-26 EB (Basic Analysis)	S
9206	2	15.384589	I-26 EB (Basic Analysis)	S
9206	3	15.429418	I-26 EB (Basic Analysis)	S
9206	4	14.744058	I-26 EB (Basic Analysis)	S
9206	5	15.146497	I-26 EB (Basic Analysis)	S
9206	6	15.374947	I-26 EB (Basic Analysis)	S
9206	7	15.441644	I-26 EB (Basic Analysis)	S
9206	8	15.053203	I-26 EB (Basic Analysis)	S
9206	9	15.539747	I-26 EB (Basic Analysis)	S
9206	10	14.821482	I-26 EB (Basic Analysis)	S
9207	1	14.101103	I-26 EB (Basic Analysis)	S

RPA AM

ID	Run	Density	Name (Type)	Direction
9207	2	15.384589	I-26 EB (Basic Analysis)	S
9207	3	15.429418	I-26 EB (Basic Analysis)	S
9207	4	14.744058	I-26 EB (Basic Analysis)	S
9207	5	15.146497	I-26 EB (Basic Analysis)	S
9207	6	15.374947	I-26 EB (Basic Analysis)	S
9207	7	15.441644	I-26 EB (Basic Analysis)	S
9207	8	15.053203	I-26 EB (Basic Analysis)	S
9207	9	15.539747	I-26 EB (Basic Analysis)	S
9207	10	14.821482	I-26 EB (Basic Analysis)	S
9208	1	17.699753	(Basic Analysis)	SE
9208	2	16.670983	(Basic Analysis)	SE
9208	3	17.704652	(Basic Analysis)	SE
9208	4	17.738945	(Basic Analysis)	SE
9208	5	16.433386	(Basic Analysis)	SE
9208	6	16.688129	(Basic Analysis)	SE
9208	7	18.532568	(Basic Analysis)	SE
9208	8	17.905507	(Basic Analysis)	SE
9208	9	17.748742	(Basic Analysis)	SE
9208	10	17.349481	(Basic Analysis)	SE
9211	1	11.911568	I-20 EB (Basic Analysis)	NE
9211	2	10.762776	I-20 EB (Basic Analysis)	NE
9211	3	10.786783	I-20 EB (Basic Analysis)	NE
9211	4	10.342658	I-20 EB (Basic Analysis)	NE
9211	5	10.860215	I-20 EB (Basic Analysis)	NE
9211	6	11.000019	I-20 EB (Basic Analysis)	NE
9211	7	11.164535	I-20 EB (Basic Analysis)	NE
9211	8	11.146883	I-20 EB (Basic Analysis)	NE
9211	9	10.968951	I-20 EB (Basic Analysis)	NE
9211	10	10.855272	I-20 EB (Basic Analysis)	NE
9225	1	16.754672	I-20 EB (Basic Analysis)	NE
9225	2	16.145784	I-20 EB (Basic Analysis)	NE
9225	3	16.558727	I-20 EB (Basic Analysis)	NE
9225	4	16.101429	I-20 EB (Basic Analysis)	NE
9225	5	15.866464	I-20 EB (Basic Analysis)	NE
9225	6	16.499214	I-20 EB (Basic Analysis)	NE
9225	7	16.573606	I-20 EB (Basic Analysis)	NE
9225	8	16.484336	I-20 EB (Basic Analysis)	NE
9225	9	16.097499	I-20 EB (Basic Analysis)	NE
9225	10	16.002615	I-20 EB (Basic Analysis)	NE
9243	1	39.097776	I-20 WB (Basic Analysis)	SW
9243	2	39.726475	I-20 WB (Basic Analysis)	SW
9243	3	37.389193	I-20 WB (Basic Analysis)	SW
9243	4	38.513346	I-20 WB (Basic Analysis)	SW
9243	5	38.779105	I-20 WB (Basic Analysis)	SW
9243	6	40.170337	I-20 WB (Basic Analysis)	SW
9243	7	38.46213	I-20 WB (Basic Analysis)	SW
9243	8	38.991124	I-20 WB (Basic Analysis)	SW
9243	9	38.022282	I-20 WB (Basic Analysis)	SW
9243	10	37.818311	I-20 WB (Basic Analysis)	SW
9245	1	24.131767	CD ROAD I-20 WB TO I-20 (Basic Analysis)	NW
9245	2	24.51982	CD ROAD I-20 WB TO I-20 (Basic Analysis)	NW
9245	3	23.758205	CD ROAD I-20 WB TO I-20 (Basic Analysis)	NW
9245	4	23.943376	CD ROAD I-20 WB TO I-20 (Basic Analysis)	NW
9245	5	23.579475	CD ROAD I-20 WB TO I-20 (Basic Analysis)	NW
9245	6	23.386254	CD ROAD I-20 WB TO I-20 (Basic Analysis)	NW
9245	7	23.843545	CD ROAD I-20 WB TO I-20 (Basic Analysis)	NW
9245	8	22.584384	CD ROAD I-20 WB TO I-20 (Basic Analysis)	NW

RPA AM

ID	Run	Density	Name (Type)	Direction
9245	9	24.212276	CD ROAD I-20 WB TO I-20 (Basic Analysis)	NW
9245	10	22.983709	CD ROAD I-20 WB TO I-20 (Basic Analysis)	NW
9246	1	18.188025	I-126 NB (Diverge Analysis)	NW
9246	2	16.305405	I-126 NB (Diverge Analysis)	NW
9246	3	15.025861	I-126 NB (Diverge Analysis)	NW
9246	4	16.622896	I-126 NB (Diverge Analysis)	NW
9246	5	15.469394	I-126 NB (Diverge Analysis)	NW
9246	6	16.497632	I-126 NB (Diverge Analysis)	NW
9246	7	16.767305	I-126 NB (Diverge Analysis)	NW
9246	8	16.075661	I-126 NB (Diverge Analysis)	NW
9246	9	16.525575	I-126 NB (Diverge Analysis)	NW
9246	10	16.056516	I-126 NB (Diverge Analysis)	NW
9248	1	28.109286	I-26 WB (Basic Analysis)	NW
9248	2	28.249428	I-26 WB (Basic Analysis)	NW
9248	3	28.347983	I-26 WB (Basic Analysis)	NW
9248	4	27.695762	I-26 WB (Basic Analysis)	NW
9248	5	27.970469	I-26 WB (Basic Analysis)	NW
9248	6	28.257832	I-26 WB (Basic Analysis)	NW
9248	7	27.867198	I-26 WB (Basic Analysis)	NW
9248	8	27.406342	I-26 WB (Basic Analysis)	NW
9248	9	28.213458	I-26 WB (Basic Analysis)	NW
9248	10	28.059986	I-26 WB (Basic Analysis)	NW
9249	1	16.366581	I-26 EB (Basic Analysis)	SE
9249	2	17.064354	I-26 EB (Basic Analysis)	SE
9249	3	16.480922	I-26 EB (Basic Analysis)	SE
9249	4	16.844498	I-26 EB (Basic Analysis)	SE
9249	5	16.793503	I-26 EB (Basic Analysis)	SE
9249	6	16.778019	I-26 EB (Basic Analysis)	SE
9249	7	17.034505	I-26 EB (Basic Analysis)	SE
9249	8	16.734856	I-26 EB (Basic Analysis)	SE
9249	9	17.060276	I-26 EB (Basic Analysis)	SE
9249	10	16.959894	I-26 EB (Basic Analysis)	SE

Appendix D—TransModeler Intersection Analysis Outputs

2015 Existing AM

Node	Superlink	Run	Average Control Delay	Approach Street Name	Direction	Intersection
4	5081	1	4.053475	BROAD RIVER RD	W	WESTERN LN & BROAD RIVER RD
4	5081	2	3.691578			
4	5081	3	4.5			
4	5081	4	4.3			
4	5081	5	3.6			
4	5081	6	3.770289			
4	5081	7	3.662427			
4	5081	8	3.3			
4	5081	9	3.0			
4	5081	10	3.6			
4	6465	1	6.791705	WESTERN LN	S	WESTERN LN & BROAD RIVER RD
4	6465	2	6.255169			
4	6465	3	6.4			
4	6465	4	6.7			
4	6465	5	5.824553			
4	6465	6	7.05323			
4	6465	7	6.5			
4	6465	8	6.4			
4	6465	9	7.0			
4	6465	10	5.96254			
4	6466	1	4.45747	BROAD RIVER RD	E	WESTERN LN & BROAD RIVER RD
4	6466	2	4.6			
4	6466	3	4.2			
4	6466	4	4.005102			
4	6466	5	4.735423			
4	6466	6	4.2			
4	6466	7	4.5			
4	6466	8	4.137388			
4	6466	9	4.349327			
4	6466	10	4.7			
4	6467	1	6.7	WESTERN LN	N	WESTERN LN & BROAD RIVER RD
4	6467	2	6.5			
4	6467	3	7.17641			
4	6467	4	7.668935			
4	6467	5	6.3			
4	6467	6	7.1			
4	6467	7	6.8			
4	6467	8	7.318074			
4	6467	9	6.163217			
4	6467	10	6.6			
11	5487	1	0.0	MORNINGHILL DR	N	MORNINGHILL DR & BURNETTE DR
11	5487	2	0			
11	5487	3	0			
11	5487	4	0.0			
11	5487	5	0.0			
11	5487	6	0.0			
11	5487	7	0			
11	5487	8	0			
11	5487	9	0.0			
11	5487	10	0.0			
11	6536	1		MORNINGHILL DR	S	MORNINGHILL DR & BURNETTE DR
11	6536	2				
11	6536	3				
11	6536	4				
11	6536	5				
11	6536	6				
11	6536	7				
11	6536	8				
11	6536	9				
11	6536	10				
11	6537	1	0	BURNETTE DR	E	MORNINGHILL DR & BURNETTE DR
11	6537	2	0.0			
11	6537	3	0.0			
11	6537	4	0.0			
11	6537	5	0.0			
11	6537	6	0			
11	6537	7	0			
11	6537	8	0.0			
11	6537	9	0.0			
11	6537	10	0.0			
26	5488	1	0	RAMP	S	RAMP & 6502 (NW)
26	5488	2	0			
26	5488	3	0.0			
26	5488	4	0.0			
26	5488	5	0.0			
26	5488	6	0			
26	5488	7	0			
26	5488	8	0.0			
26	5488	9	0.0			
26	5488	10	0.0			
26	6501	1	10.078743	RAMP	N	RAMP & 6502 (NW)
26	6501	2	8.151267			
26	6501	3	9.8			
26	6501	4	8.5			
26	6501	5	9.7			
26	6501	6	8.057293			
26	6501	7	8.65725			
26	6501	8	9.0			
26	6501	9	8.7			
26	6501	10	8.2			
26	6502	1	0		SE	RAMP & 6502 (NW)
26	6502	2	0			
26	6502	3	0.0			
26	6502	4	0.0			
26	6502	5	0.0			
26	6502	6	0			

Node	Superlink	Run	Average Control Delay	Approach Street Name	Direction	Intersection
26	6502	7	0			
26	6502	8	0.0			
26	6502	9	0.0			
26	6502	10	0.0			
28	5140	1	0	GREYSTONE BLVD	S	GREYSTONE BLVD & CANDI LN
28	5140	2	0			
28	5140	3	0.0			
28	5140	4	0			
28	5140	5	0			
28	5140	6	0.0			
28	5140	7	0.0			
28	5140	8	0			
28	5140	9	0			
28	5140	10	0.0			
28	6506	1	7.0	GREYSTONE BLVD	W	GREYSTONE BLVD & CANDI LN
28	6506	2	6.665477			
28	6506	3	6.458674			
28	6506	4	6.5			
28	6506	5	6.4			
28	6506	6	6.8			
28	6506	7	6.685291			
28	6506	8	6.505632			
28	6506	9	6.7			
28	6506	10	6.8			
28	6507	1		CANDI LN	E	GREYSTONE BLVD & CANDI LN
28	6507	2				
28	6507	3				
28	6507	4				
28	6507	5				
28	6507	6				
28	6507	7				
28	6507	8				
28	6507	9				
28	6507	10				
41	6518	1	1.916767	BROAD RIVER RD	NW	DUTCH SQUARE BLVD & BROAD RIVER RD
41	6518	2	1.484282			
41	6518	3	2.0			
41	6518	4	1.3			
41	6518	5	1.4			
41	6518	6	1.332684			
41	6518	7	1.29434			
41	6518	8	1.3			
41	6518	9	2.1			
41	6518	10	2.2			
41	6519	1	44.814382	DUTCH SQUARE BLVD	E	DUTCH SQUARE BLVD & BROAD RIVER RD
41	6519	2	42.421504			
41	6519	3	39.0			
41	6519	4	46.7			
41	6519	5	42.2			
41	6519	6	44.718741			
41	6519	7	41.075583			
41	6519	8	40.6			
41	6519	9	41.4			
41	6519	10	42.369209			
41	6521	1	0.62158	BROAD RIVER RD	SE	DUTCH SQUARE BLVD & BROAD RIVER RD
41	6521	2	0.6			
41	6521	3	0.7			
41	6521	4	0.7			
41	6521	5	0.964764			
41	6521	6	0.846938			
41	6521	7	0.8			
41	6521	8	1.0			
41	6521	9	0.752756			
41	6521	10	1.064855			
43	6519	1		DUTCH SQUARE BLVD	W	DUTCH SQUARE BLVD & 6522 (N)
43	6519	2				
43	6519	3				
43	6519	4				
43	6519	5				
43	6519	6				
43	6519	7				
43	6519	8				
43	6519	9				
43	6519	10				
43	6520	1	17.069966	DUTCH SQUARE BLVD	E	DUTCH SQUARE BLVD & 6522 (N)
43	6520	2	17.0			
43	6520	3	16.5			
43	6520	4	14.2			
43	6520	5	12.282679			
43	6520	6	15.060517			
43	6520	7	19.8			
43	6520	8	18.1			
43	6520	9	20.188677			
43	6520	10	19.881294			
43	6522	1	0.0		SW	DUTCH SQUARE BLVD & 6522 (N)
43	6522	2	0.0			
43	6522	3	0			
43	6522	4	0			
43	6522	5	0.0			
43	6522	6	0.0			
43	6522	7	0.0			
43	6522	8	0			
43	6522	9	0			
43	6522	10	0			
46	6273	1	0.0	PARKRIDGE DR	NE	PARKRIDGE DR & 6555 (NE)
46	6273	2	0.0			
46	6273	3	0			
46	6273	4	0			
46	6273	5	0.0			
46	6273	6	0.0			
46	6273	7	0.0			
46	6273	8	0			
46	6273	9	0			
46	6273	10	0.0			
46	6555	1			SW	PARKRIDGE DR & 6555 (NE)
46	6555	2				
46	6555	3				
46	6555	4				
46	6555	5				
46	6555	6				
46	6555	7				
46	6555	8				

Node	Superlink	Run	Average Control Delay	Approach Street Name	Direction	Intersection
46	6555	9				
46	6555	10				
46	6556	1	26.834216	PARKRIDGE DR	SE	PARKRIDGE DR & 6555 (NE)
46	6556	2	25.269403			
46	6556	3	24.555727			
46	6556	4	25.3252			
46	6556	5	29.461545			
46	6556	6	28.261439			
46	6556	7	26.963476			
46	6556	8	20.524273			
46	6556	9	23.902378			
46	6556	10	22.69317			
100000012	5081	1	30.052793	BROAD RIVER RD	SE	KINLEY RD, BROAD RIVER RD & KENNERLY RD
100000012	5081	2	32.036483			
100000012	5081	3	28.79136			
100000012	5081	4	28.456142			
100000012	5081	5	32.898263			
100000012	5081	6	31.036821			
100000012	5081	7	29.027517			
100000012	5081	8	25.485975			
100000012	5081	9	25.814645			
100000012	5081	10	28.518273			
100000012	6276	1	36.951203	KINLEY RD	N	KINLEY RD, BROAD RIVER RD & KENNERLY RD
100000012	6276	2	45.558761			
100000012	6276	3	55.545282			
100000012	6276	4	39.866875			
100000012	6276	5	41.821727			
100000012	6276	6	44.692414			
100000012	6276	7	48.728065			
100000012	6276	8	35.42195			
100000012	6276	9	39.46841			
100000012	6276	10	41.835876			
100000012	6307	1	190.567557	KENNERLY RD	S	KINLEY RD, BROAD RIVER RD & KENNERLY RD
100000012	6307	2	204.947154			
100000012	6307	3	200.669135			
100000012	6307	4	226.827703			
100000012	6307	5	210.947665			
100000012	6307	6	165.197102			
100000012	6307	7	186.394143			
100000012	6307	8	211.202795			
100000012	6307	9	198.346193			
100000012	6307	10	188.497613			
100000012	6308	1	21.102292	BROAD RIVER RD	NW	KINLEY RD, BROAD RIVER RD & KENNERLY RD
100000012	6308	2	24.116709			
100000012	6308	3	23.971598			
100000012	6308	4	22.397916			
100000012	6308	5	22.803142			
100000012	6308	6	24.290182			
100000012	6308	7	23.808231			
100000012	6308	8	20.806895			
100000012	6308	9	22.6048			
100000012	6308	10	23.13655			
100000025	6267	1	0	PARKRIDGE DR	NW	CLUB RD & PARKRIDGE DR
100000025	6267	2	0			
100000025	6267	3	0			
100000025	6267	4	0			
100000025	6267	5	0			
100000025	6267	6	0			
100000025	6267	7	0			
100000025	6267	8	0			
100000025	6267	9	0			
100000025	6267	10	0			
100000025	6273	1	0	PARKRIDGE DR	SE	CLUB RD & PARKRIDGE DR
100000025	6273	2	0			
100000025	6273	3	0			
100000025	6273	4	0			
100000025	6273	5	0			
100000025	6273	6	0			
100000025	6273	7	0			
100000025	6273	8	0			
100000025	6273	9	0			
100000025	6273	10	0			
100000025	6304	1		CLUB RD	S	CLUB RD & PARKRIDGE DR
100000025	6304	2				
100000025	6304	3				
100000025	6304	4				
100000025	6304	5				
100000025	6304	6				
100000025	6304	7				
100000025	6304	8				
100000025	6304	9				
100000025	6304	10				
100000037	5101	1	17.553771	HARBISON BLVD	NE	BROAD RIVER RD & HARBISON BLVD
100000037	5101	2	15.905319			
100000037	5101	3	17.915507			
100000037	5101	4	16.283069			
100000037	5101	5	18.93931			
100000037	5101	6	18.994126			
100000037	5101	7	19.347293			
100000037	5101	8	16.741527			
100000037	5101	9	17.554325			
100000037	5101	10	19.008742			
100000037	6317	1	9.754298	BROAD RIVER RD	SE	BROAD RIVER RD & HARBISON BLVD
100000037	6317	2	9.989346			
100000037	6317	3	11.191422			
100000037	6317	4	13.084619			
100000037	6317	5	11.105328			
100000037	6317	6	11.194395			
100000037	6317	7	11.507067			
100000037	6317	8	11.799339			
100000037	6317	9	11.601799			
100000037	6317	10	11.41888			
100000037	6320	1	5.236666	BROAD RIVER RD	NW	BROAD RIVER RD & HARBISON BLVD
100000037	6320	2	4.390264			
100000037	6320	3	4.503016			
100000037	6320	4	3.009614			
100000037	6320	5	5.309062			
100000037	6320	6	4.664188			
100000037	6320	7	3.345425			
100000037	6320	8	5.201537			
100000037	6320	9	4.86552			
100000037	6320	10	4.360873			

Node	Superlink	Run	Average Control Delay	Approach Street Name	Direction	Intersection
100000038	6232	1	0	BROAD RIVER RD	NW	BROAD RIVER RD & 6311 (S)
100000038	6232	2	0			
100000038	6232	3	0			
100000038	6232	4	0			
100000038	6232	5	0			
100000038	6232	6	0			
100000038	6232	7	0			
100000038	6232	8	0			
100000038	6232	9	0			
100000038	6232	10	0			
100000038	6311	1	9.6364		N	BROAD RIVER RD & 6311 (S)
100000038	6311	2	8.154519			
100000038	6311	3				
100000038	6311	4	28.178238			
100000038	6311	5				
100000038	6311	6				
100000038	6311	7	5.657135			
100000038	6311	8				
100000038	6311	9	7.871399			
100000038	6311	10				
100000038	6312	1	0	BROAD RIVER RD	SE	BROAD RIVER RD & 6311 (S)
100000038	6312	2	0.011094			
100000038	6312	3	0			
100000038	6312	4	0			
100000038	6312	5	0			
100000038	6312	6	0			
100000038	6312	7	0.027541			
100000038	6312	8	0			
100000038	6312	9	0			
100000038	6312	10	0			
100000041	6281	1	0	LAKE MURRAY BLVD	W	LAKE MURRAY BLVD & 6311 (N)
100000041	6281	2	0			
100000041	6281	3	0			
100000041	6281	4	0			
100000041	6281	5	0			
100000041	6281	6	0			
100000041	6281	7	0			
100000041	6281	8	0			
100000041	6281	9	0			
100000041	6281	10	0			
100000041	6311	1			SW	LAKE MURRAY BLVD & 6311 (N)
100000041	6311	2				
100000041	6311	3				
100000041	6311	4				
100000041	6311	5				
100000041	6311	6				
100000041	6311	7				
100000041	6311	8				
100000041	6311	9				
100000041	6311	10				
100000041	6313	1	0.084892	LAKE MURRAY BLVD	E	LAKE MURRAY BLVD & 6311 (N)
100000041	6313	2	0.043843			
100000041	6313	3	0			
100000041	6313	4	0.025148			
100000041	6313	5	0			
100000041	6313	6	0			
100000041	6313	7	0.269182			
100000041	6313	8	0			
100000041	6313	9	0.403418			
100000041	6313	10	0			
100000046	5511	1	24.486187	BUSH RIVER RD	E	BUSH RIVER RD, BROAD RIVER RD & ELM ABODE TER
100000046	5511	2	24.801094			
100000046	5511	3	26.469303			
100000046	5511	4	27.267728			
100000046	5511	5	28.944789			
100000046	5511	6	27.113446			
100000046	5511	7	30.293289			
100000046	5511	8	27.013799			
100000046	5511	9	27.005246			
100000046	5511	10	26.913172			
100000046	6323	1	154.606766	BROAD RIVER RD	NW	BUSH RIVER RD, BROAD RIVER RD & ELM ABODE TER
100000046	6323	2	174.797798			
100000046	6323	3	121.070221			
100000046	6323	4	153.56638			
100000046	6323	5	169.991633			
100000046	6323	6	203.489625			
100000046	6323	7	146.491599			
100000046	6323	8	166.560816			
100000046	6323	9	134.334289			
100000046	6323	10	103.454308			
100000046	6324	1	71.787387	ELM ABODE TER	SW	BUSH RIVER RD, BROAD RIVER RD & ELM ABODE TER
100000046	6324	2	47.461018			
100000046	6324	3	56.800238			
100000046	6324	4	51.025552			
100000046	6324	5	89.590386			
100000046	6324	6	50.627874			
100000046	6324	7	85.381279			
100000046	6324	8	40.917128			
100000046	6324	9	47.083017			
100000046	6324	10	46.301909			
100000046	6518	1	22.088302	BROAD RIVER RD	SE	BUSH RIVER RD, BROAD RIVER RD & ELM ABODE TER
100000046	6518	2	22.677685			
100000046	6518	3	21.246872			
100000046	6518	4	24.295066			
100000046	6518	5	25.51602			
100000046	6518	6	24.026278			
100000046	6518	7	27.530483			
100000046	6518	8	21.735141			
100000046	6518	9	23.294457			
100000046	6518	10	23.105674			
100000049	6318	1	73.774931	LOST CREEK DR	S	LOST CREEK DR, BROAD RIVER RD & PINEY WOODS RD
100000049	6318	2	62.824281			
100000049	6318	3	76.049805			
100000049	6318	4	76.009402			
100000049	6318	5	63.86191			
100000049	6318	6	71.367944			
100000049	6318	7	67.711146			
100000049	6318	8	68.303344			
100000049	6318	9	77.798784			
100000049	6318	10	66.429866			
100000049	6319	1	20.5592	PINEY WOODS RD	N	LOST CREEK DR, BROAD RIVER RD & PINEY WOODS RD
100000049	6319	2	19.713045			

Node	Superlink	Run	Average Control Delay	Approach Street Name	Direction	Intersection
100000049	6319	3	18.12807			
100000049	6319	4	17.045097			
100000049	6319	5	18.342933			
100000049	6319	6	19.914077			
100000049	6319	7	17.607886			
100000049	6319	8	21.619286			
100000049	6319	9	19.065286			
100000049	6319	10	17.826069			
100000049	6320	1	12.0655	BROAD RIVER RD	SE	LOST CREEK DR, BROAD RIVER RD & PINEY WOODS RD
100000049	6320	2	12.028341			
100000049	6320	3	12.336024			
100000049	6320	4	13.053846			
100000049	6320	5	8.653137			
100000049	6320	6	10.652277			
100000049	6320	7	15.646124			
100000049	6320	8	11.501573			
100000049	6320	9	13.890235			
100000049	6320	10	12.010395			
100000049	6322	1	8.765103	BROAD RIVER RD	NW	LOST CREEK DR, BROAD RIVER RD & PINEY WOODS RD
100000049	6322	2	6.641061			
100000049	6322	3	7.200488			
100000049	6322	4	8.152131			
100000049	6322	5	7.439303			
100000049	6322	6	9.36003			
100000049	6322	7	7.44594			
100000049	6322	8	7.459336			
100000049	6322	9	7.593564			
100000049	6322	10	9.050521			
100000068	6321	1	9.980311	PINEY GROVE RD	E	BROAD RIVER RD & PINEY GROVE RD
100000068	6321	2	10.888484			
100000068	6321	3	9.314896			
100000068	6321	4	11.024547			
100000068	6321	5	9.793986			
100000068	6321	6	12.853679			
100000068	6321	7	9.924431			
100000068	6321	8	13.024579			
100000068	6321	9	9.988737			
100000068	6321	10	12.878387			
100000068	6322	1	2.904667	BROAD RIVER RD	SE	BROAD RIVER RD & PINEY GROVE RD
100000068	6322	2	2.863228			
100000068	6322	3	2.747439			
100000068	6322	4	2.968537			
100000068	6322	5	2.657897			
100000068	6322	6	2.835053			
100000068	6322	7	2.711095			
100000068	6322	8	2.336182			
100000068	6322	9	2.278681			
100000068	6322	10	2.705387			
100000068	6357	1	3.187238	BROAD RIVER RD	NW	BROAD RIVER RD & PINEY GROVE RD
100000068	6357	2	2.650426			
100000068	6357	3	3.767907			
100000068	6357	4	4.220662			
100000068	6357	5	3.099178			
100000068	6357	6	3.61339			
100000068	6357	7	4.038323			
100000068	6357	8	2.455816			
100000068	6357	9	3.760328			
100000068	6357	10	3.616453			
100000085	6325	1	0.039015	BROAD RIVER RD	E	BROAD RIVER RD, RIVERHILL CIR & RT
100000085	6325	2	0.083197			
100000085	6325	3	0.051368			
100000085	6325	4	0.058507			
100000085	6325	5	0.042537			
100000085	6325	6	0.035625			
100000085	6325	7	0.085777			
100000085	6325	8	0.068824			
100000085	6325	9	0.051483			
100000085	6325	10	0.061009			
100000085	6329	1	5.103786	RT	E	BROAD RIVER RD, RIVERHILL CIR & RT
100000085	6329	2	5.104957			
100000085	6329	3	4.67461			
100000085	6329	4	3.409965			
100000085	6329	5	5.146657			
100000085	6329	6	5.121843			
100000085	6329	7	4.826756			
100000085	6329	8	5.224156			
100000085	6329	9	4.115345			
100000085	6329	10	6.254469			
100000085	6330	1	1.808346	BROAD RIVER RD	W	BROAD RIVER RD, RIVERHILL CIR & RT
100000085	6330	2	2.367701			
100000085	6330	3	1.30313			
100000085	6330	4	1.264091			
100000085	6330	5	2.605834			
100000085	6330	6	1.84915			
100000085	6330	7	2.55966			
100000085	6330	8	2.127169			
100000085	6330	9	1.420798			
100000085	6330	10	2.551566			
100000085	6331	1	5.32564	RIVERHILL CIR	W	BROAD RIVER RD, RIVERHILL CIR & RT
100000085	6331	2	5.519401			
100000085	6331	3	3.952896			
100000085	6331	4	5.508616			
100000085	6331	5	4.649449			
100000085	6331	6	3.507532			
100000085	6331	7	5.525246			
100000085	6331	8	2.803116			
100000085	6331	9	3.37169			
100000085	6331	10	2.733385			
100000093	4299	1	33.848792	RAMP	SW	SUNSET BLVD & RAMP
100000093	4299	2	40.940227			
100000093	4299	3	33.75952			
100000093	4299	4	39.430191			
100000093	4299	5	38.610839			
100000093	4299	6	42.059087			
100000093	4299	7	39.823217			
100000093	4299	8	38.5931			
100000093	4299	9	41.13302			
100000093	4299	10	37.794795			
100000093	4949	1	13.687634	SUNSET BLVD	E	SUNSET BLVD & RAMP
100000093	4949	2	13.792468			
100000093	4949	3	10.468259			
100000093	4949	4	13.272343			

Node	Superlink	Run	Average Control Delay	Approach Street Name	Direction	Intersection
100000093	4949	5	14.169239			
100000093	4949	6	11.367672			
100000093	4949	7	11.113769			
100000093	4949	8	12.273302			
100000093	4949	9	13.546875			
100000093	4949	10	10.62564			
100000093	4950	1	0.090979	SUNSET BLVD	W	SUNSET BLVD & RAMP
100000093	4950	2	0.0964			
100000093	4950	3	0.041573			
100000093	4950	4	0.126827			
100000093	4950	5	0.050186			
100000093	4950	6	0.013136			
100000093	4950	7	0.019912			
100000093	4950	8	0.030063			
100000093	4950	9	0.036721			
100000093	4950	10	0.087157			
100000120	5031	1	11.580091	SUNSET BLVD	W	CORLEY MILL RD, SUNSET BLVD & GINNY LN
100000120	5031	2	11.251568			
100000120	5031	3	11.617075			
100000120	5031	4	11.365916			
100000120	5031	5	11.269333			
100000120	5031	6	11.748848			
100000120	5031	7	11.169557			
100000120	5031	8	11.290056			
100000120	5031	9	11.354672			
100000120	5031	10	10.966971			
100000120	5352	1	14.193418	CORLEY MILL RD	S	CORLEY MILL RD, SUNSET BLVD & GINNY LN
100000120	5352	2	14.201777			
100000120	5352	3	13.726885			
100000120	5352	4	14.731614			
100000120	5352	5	14.114036			
100000120	5352	6	13.513407			
100000120	5352	7	13.746702			
100000120	5352	8	13.833211			
100000120	5352	9	14.318289			
100000120	5352	10	13.494154			
100000120	5353	1	27.56779	GINNY LN	N	CORLEY MILL RD, SUNSET BLVD & GINNY LN
100000120	5353	2	29.046788			
100000120	5353	3	29.100833			
100000120	5353	4	27.920681			
100000120	5353	5	32.382511			
100000120	5353	6	32.240923			
100000120	5353	7	29.878876			
100000120	5353	8	27.736852			
100000120	5353	9	27.828659			
100000120	5353	10	34.062109			
100000120	5355	1	32.620623	SUNSET BLVD	E	CORLEY MILL RD, SUNSET BLVD & GINNY LN
100000120	5355	2	30.666224			
100000120	5355	3	32.05063			
100000120	5355	4	32.526639			
100000120	5355	5	35.945077			
100000120	5355	6	43.26107			
100000120	5355	7	35.797859			
100000120	5355	8	30.570943			
100000120	5355	9	27.691806			
100000120	5355	10	28.724946			
100000134	2048	1	25.854202	RAMP	SW	SUNSET BLVD & RAMP
100000134	2048	2	23.663142			
100000134	2048	3	24.539477			
100000134	2048	4	24.096057			
100000134	2048	5	24.648146			
100000134	2048	6	23.150256			
100000134	2048	7	26.017686			
100000134	2048	8	23.259061			
100000134	2048	9	23.700191			
100000134	2048	10	23.025156			
100000134	5027	1	4.303223	SUNSET BLVD	NW	SUNSET BLVD & RAMP
100000134	5027	2	4.453312			
100000134	5027	3	4.45668			
100000134	5027	4	4.361924			
100000134	5027	5	4.569486			
100000134	5027	6	5.107332			
100000134	5027	7	3.742612			
100000134	5027	8	4.231276			
100000134	5027	9	4.1237			
100000134	5027	10	4.589635			
100000134	5030	1	3.78278	SUNSET BLVD	SE	SUNSET BLVD & RAMP
100000134	5030	2	3.699464			
100000134	5030	3	3.884836			
100000134	5030	4	3.645628			
100000134	5030	5	3.898926			
100000134	5030	6	4.246387			
100000134	5030	7	3.923378			
100000134	5030	8	3.686358			
100000134	5030	9	3.659854			
100000134	5030	10	4.051848			
100000135	2039	1	12.146383	I-20 EB OFF-RAMP	NE	SUNSET BLVD & I-20 EB OFF-RAMP
100000135	2039	2	12.760306			
100000135	2039	3	13.509274			
100000135	2039	4	11.744697			
100000135	2039	5	11.981939			
100000135	2039	6	13.545581			
100000135	2039	7	11.902616			
100000135	2039	8	13.216761			
100000135	2039	9	12.884112			
100000135	2039	10	11.8843			
100000135	5022	1	5.415962	SUNSET BLVD	SE	SUNSET BLVD & I-20 EB OFF-RAMP
100000135	5022	2	6.648378			
100000135	5022	3	5.44561			
100000135	5022	4	5.673594			
100000135	5022	5	5.268435			
100000135	5022	6	7.025449			
100000135	5022	7	5.248598			
100000135	5022	8	5.527496			
100000135	5022	9	4.711816			
100000135	5022	10	5.11813			
100000135	5023	1	4.281547	SUNSET BLVD	NW	SUNSET BLVD & I-20 EB OFF-RAMP
100000135	5023	2	5.382638			
100000135	5023	3	5.154917			
100000135	5023	4	5.247721			
100000135	5023	5	5.406418			
100000135	5023	6	5.245215			

Node	Superlink	Run	Average Control Delay	Approach Street Name	Direction	Intersection
100000135	5023	7	5.039261			
100000135	5023	8	4.695579			
100000135	5023	9	4.498328			
100000135	5023	10	4.640819			
100000136	5021	1	28.449074	SUNSET BLVD	SE	SUNSET BLVD, CROMER RD & DAVEGA DR
100000136	5021	2	29.4825			
100000136	5021	3	27.374226			
100000136	5021	4	29.999804			
100000136	5021	5	26.710376			
100000136	5021	6	30.824954			
100000136	5021	7	25.261075			
100000136	5021	8	29.353478			
100000136	5021	9	27.93496			
100000136	5021	10	27.335717			
100000136	5362	1	267.999294	CROMER RD	NE	SUNSET BLVD, CROMER RD & DAVEGA DR
100000136	5362	2	224.740869			
100000136	5362	3	216.424309			
100000136	5362	4	207.693798			
100000136	5362	5	277.915232			
100000136	5362	6	317.928042			
100000136	5362	7	189.099349			
100000136	5362	8	190.335505			
100000136	5362	9	288.151039			
100000136	5362	10	256.150898			
100000136	5364	1	30.307103	SUNSET BLVD	NW	SUNSET BLVD, CROMER RD & DAVEGA DR
100000136	5364	2	32.657131			
100000136	5364	3	42.563398			
100000136	5364	4	33.364867			
100000136	5364	5	30.805197			
100000136	5364	6	38.053758			
100000136	5364	7	30.404542			
100000136	5364	8	27.111781			
100000136	5364	9	30.717911			
100000136	5364	10	35.508144			
100000136	6459	1	12.68464	DAVEGA DR	SW	SUNSET BLVD, CROMER RD & DAVEGA DR
100000136	6459	2	12.549157			
100000136	6459	3	20.900024			
100000136	6459	4	12.510695			
100000136	6459	5	14.326146			
100000136	6459	6	13.532362			
100000136	6459	7	16.079964			
100000136	6459	8	12.670714			
100000136	6459	9	13.755716			
100000136	6459	10	14.991772			
100000138	2052	1	0	RAMP	NW	RAMP, SUNSET BLVD & I-20 EXIT 61 WB ON RAMP
100000138	2052	2	0			
100000138	2052	3	0			
100000138	2052	4	0			
100000138	2052	5	0			
100000138	2052	6	0			
100000138	2052	7	0			
100000138	2052	8	0			
100000138	2052	9	0			
100000138	2052	10	0			
100000138	5030	1	0	SUNSET BLVD	NW	RAMP, SUNSET BLVD & I-20 EXIT 61 WB ON RAMP
100000138	5030	2	0			
100000138	5030	3	0			
100000138	5030	4	0			
100000138	5030	5	0			
100000138	5030	6	0			
100000138	5030	7	0			
100000138	5030	8	0			
100000138	5030	9	0			
100000138	5030	10	0			
100000138	6553	1	7.073289	SUNSET BLVD	SE	RAMP, SUNSET BLVD & I-20 EXIT 61 WB ON RAMP
100000138	6553	2	8.253304			
100000138	6553	3	7.356029			
100000138	6553	4	7.865228			
100000138	6553	5	7.347754			
100000138	6553	6	8.512637			
100000138	6553	7	7.757131			
100000138	6553	8	6.24963			
100000138	6553	9	6.187803			
100000138	6553	10	7.87826			
100000139	2065	1	27.859616	RAMP	S	RAMP & BUSH RIVER RD
100000139	2065	2	30.283374			
100000139	2065	3	27.449455			
100000139	2065	4	30.662701			
100000139	2065	5	36.0603			
100000139	2065	6	28.094956			
100000139	2065	7	29.6601			
100000139	2065	8	34.255203			
100000139	2065	9	27.965462			
100000139	2065	10	32.851753			
100000139	5033	1	8.244705	BUSH RIVER RD	NW	RAMP & BUSH RIVER RD
100000139	5033	2	7.360616			
100000139	5033	3	4.494167			
100000139	5033	4	5.900479			
100000139	5033	5	10.074751			
100000139	5033	6	7.853022			
100000139	5033	7	9.833433			
100000139	5033	8	7.435242			
100000139	5033	9	9.349014			
100000139	5033	10	6.786071			
100000139	5034	1	5.691085	BUSH RIVER RD	SE	RAMP & BUSH RIVER RD
100000139	5034	2	5.663389			
100000139	5034	3	4.7178			
100000139	5034	4	5.196783			
100000139	5034	5	6.615973			
100000139	5034	6	6.679112			
100000139	5034	7	6.979039			
100000139	5034	8	5.514796			
100000139	5034	9	6.957863			
100000139	5034	10	5.532693			
100000140	5376	1	5.077537	SUNSET BLVD	W	SUMMER PLACE DR, SUNSET BLVD & FAIRLANE DR
100000140	5376	2	4.395646			
100000140	5376	3	6.085122			
100000140	5376	4	5.899777			
100000140	5376	5	5.357844			
100000140	5376	6	5.106257			
100000140	5376	7	5.974719			
100000140	5376	8	5.61837			

Node	Superlink	Run	Average Control Delay	Approach Street Name	Direction	Intersection
100000140	5376	9	5.639877			
100000140	5376	10	5.475013			
100000140	5378	1	44.31958	SUMMER PLACE DR	N	SUMMER PLACE DR, SUNSET BLVD & FAIRLANE DR
100000140	5378	2	41.042747			
100000140	5378	3	42.654243			
100000140	5378	4	43.645595			
100000140	5378	5	41.973732			
100000140	5378	6	43.710141			
100000140	5378	7	45.047504			
100000140	5378	8	42.1695			
100000140	5378	9	40.925304			
100000140	5378	10	45.127176			
100000140	6489	1		FAIRLANE DR	S	SUMMER PLACE DR, SUNSET BLVD & FAIRLANE DR
100000140	6489	2				
100000140	6489	3				
100000140	6489	4				
100000140	6489	5				
100000140	6489	6				
100000140	6489	7				
100000140	6489	8				
100000140	6489	9				
100000140	6489	10				
100000140	6764	1	6.325141	SUNSET BLVD	E	SUMMER PLACE DR, SUNSET BLVD & FAIRLANE DR
100000140	6764	2	4.104452			
100000140	6764	3	6.883595			
100000140	6764	4	6.156924			
100000140	6764	5	5.847226			
100000140	6764	6	5.014672			
100000140	6764	7	7.243027			
100000140	6764	8	5.980306			
100000140	6764	9	5.885446			
100000140	6764	10	8.258923			
100000142	2053	1	14.803771	RAMP	NE	BUSH RIVER RD & RAMP
100000142	2053	2	13.415449			
100000142	2053	3	14.338793			
100000142	2053	4	13.59845			
100000142	2053	5	12.572438			
100000142	2053	6	14.886546			
100000142	2053	7	14.518178			
100000142	2053	8	13.326392			
100000142	2053	9	12.099919			
100000142	2053	10	13.649647			
100000142	5036	1	4.088257	BUSH RIVER RD	SE	BUSH RIVER RD & RAMP
100000142	5036	2	4.096154			
100000142	5036	3	3.544252			
100000142	5036	4	4.164165			
100000142	5036	5	2.655196			
100000142	5036	6	3.036269			
100000142	5036	7	2.155207			
100000142	5036	8	4.137992			
100000142	5036	9	3.741094			
100000142	5036	10	4.571031			
100000142	5037	1	5.471532	BUSH RIVER RD	NW	BUSH RIVER RD & RAMP
100000142	5037	2	7.039562			
100000142	5037	3	6.347793			
100000142	5037	4	8.6486			
100000142	5037	5	8.371515			
100000142	5037	6	5.992114			
100000142	5037	7	5.620971			
100000142	5037	8	7.534235			
100000142	5037	9	7.789129			
100000142	5037	10	8.006894			
100000143	5372	1	0	SUNSET BLVD	E	SUNSET BLVD & HEBRON DR
100000143	5372	2	0			
100000143	5372	3	0			
100000143	5372	4	0			
100000143	5372	5	0			
100000143	5372	6	0			
100000143	5372	7	0			
100000143	5372	8	0			
100000143	5372	9	0			
100000143	5372	10	0			
100000143	6763	1		HEBRON DR	N	SUNSET BLVD & HEBRON DR
100000143	6763	2				
100000143	6763	3				
100000143	6763	4				
100000143	6763	5				
100000143	6763	6				
100000143	6763	7				
100000143	6763	8				
100000143	6763	9				
100000143	6763	10				
100000143	6764	1	0	SUNSET BLVD	W	SUNSET BLVD & HEBRON DR
100000143	6764	2	0			
100000143	6764	3	0			
100000143	6764	4	0			
100000143	6764	5	0			
100000143	6764	6	0			
100000143	6764	7	0			
100000143	6764	8	0			
100000143	6764	9	0			
100000143	6764	10	0			
100000144	5376	1	4.213905	SUNSET BLVD	E	SUNSET BLVD, W. HOSPTIAL DR & SUNSET CT
100000144	5376	2	2.907773			
100000144	5376	3	2.498477			
100000144	5376	4	3.118545			
100000144	5376	5	2.88679			
100000144	5376	6	3.428176			
100000144	5376	7	2.616356			
100000144	5376	8	3.542391			
100000144	5376	9	3.313327			
100000144	5376	10	2.511717			
100000144	6760	1	57.730226	W. HOSPTIAL DR	S	SUNSET BLVD, W. HOSPTIAL DR & SUNSET CT
100000144	6760	2	58.836807			
100000144	6760	3	56.881325			
100000144	6760	4	56.128143			
100000144	6760	5	58.84011			
100000144	6760	6	52.363557			
100000144	6760	7	59.123351			
100000144	6760	8	57.69831			
100000144	6760	9	53.486006			
100000144	6760	10	55.652433			

Node	Superlink	Run	Average Control Delay	Approach Street Name	Direction	Intersection
100000144	6761	1		SUNSET CT	N	SUNSET BLVD, W. HOSPTIAL DR & SUNSET CT
100000144	6761	2				
100000144	6761	3				
100000144	6761	4				
100000144	6761	5				
100000144	6761	6				
100000144	6761	7				
100000144	6761	8				
100000144	6761	9				
100000144	6761	10				
100000144	6762	1	12.633003	SUNSET BLVD	W	SUNSET BLVD, W. HOSPTIAL DR & SUNSET CT
100000144	6762	2	14.952563			
100000144	6762	3	10.926221			
100000144	6762	4	12.157322			
100000144	6762	5	14.858029			
100000144	6762	6	15.22649			
100000144	6762	7	14.490623			
100000144	6762	8	10.893625			
100000144	6762	9	12.53794			
100000144	6762	10	8.858011			
100000150	3361	1	13.667221	I-26 EXIT 101 EB OFF RAMP	SW	I-26 EXIT 101 EB OFF RAMP & BROAD RIVER RD
100000150	3361	2	12.32801			
100000150	3361	3	14.859368			
100000150	3361	4	13.300484			
100000150	3361	5	13.073944			
100000150	3361	6	13.369437			
100000150	3361	7	12.940067			
100000150	3361	8	12.527455			
100000150	3361	9	17.627641			
100000150	3361	10	13.105588			
100000150	5071	1	0	BROAD RIVER RD	E	I-26 EXIT 101 EB OFF RAMP & BROAD RIVER RD
100000150	5071	2	0			
100000150	5071	3	0			
100000150	5071	4	0			
100000150	5071	5	0			
100000150	5071	6	0			
100000150	5071	7	0			
100000150	5071	8	0			
100000150	5071	9	0			
100000150	5071	10	0			
100000150	5073	1	0.065576	BROAD RIVER RD	W	I-26 EXIT 101 EB OFF RAMP & BROAD RIVER RD
100000150	5073	2	0.055839			
100000150	5073	3	0.068686			
100000150	5073	4	0.085994			
100000150	5073	5	0.083744			
100000150	5073	6	0.058651			
100000150	5073	7	0.076933			
100000150	5073	8	0.075702			
100000150	5073	9	0.04816			
100000150	5073	10	0.071747			
100000151	5072	1	0.298097	BROAD RIVER RD	E	BROAD RIVER RD & ON-RAMP from WB
100000151	5072	2	0.222459			
100000151	5072	3	0.32384			
100000151	5072	4	0.172092			
100000151	5072	5	0.343788			
100000151	5072	6	0.142751			
100000151	5072	7	0.220193			
100000151	5072	8	0.19505			
100000151	5072	9	0.164151			
100000151	5072	10	0.145001			
100000151	5075	1	2.045445	BROAD RIVER RD	W	BROAD RIVER RD & ON-RAMP from WB
100000151	5075	2	2.310435			
100000151	5075	3	3.53624			
100000151	5075	4	3.242842			
100000151	5075	5	2.997339			
100000151	5075	6	2.865514			
100000151	5075	7	2.124133			
100000151	5075	8	3.005185			
100000151	5075	9	2.544567			
100000151	5075	10	2.297362			
100000155	6084	1	4.330922	BROAD RIVER RD	N	BEATTY RD & BROAD RIVER RD
100000155	6084	2	3.24034			
100000155	6084	3	3.269435			
100000155	6084	4	2.775133			
100000155	6084	5	4.772119			
100000155	6084	6	3.871405			
100000155	6084	7	3.455716			
100000155	6084	8	4.911312			
100000155	6084	9	3.960574			
100000155	6084	10	4.406968			
100000155	6355	1	23.819007	BEATTY RD	E	BEATTY RD & BROAD RIVER RD
100000155	6355	2	18.198447			
100000155	6355	3	34.6292			
100000155	6355	4	23.869611			
100000155	6355	5	25.905325			
100000155	6355	6	21.613739			
100000155	6355	7	30.271964			
100000155	6355	8	27.225343			
100000155	6355	9	26.889862			
100000155	6355	10	23.897919			
100000155	6357	1	9.687351	BROAD RIVER RD	S	BEATTY RD & BROAD RIVER RD
100000155	6357	2	10.285435			
100000155	6357	3	9.08375			
100000155	6357	4	9.769596			
100000155	6357	5	11.162194			
100000155	6357	6	11.836209			
100000155	6357	7	11.203426			
100000155	6357	8	12.559041			
100000155	6357	9	10.482707			
100000155	6357	10	12.011823			
100000163	4947	1	5.288786	SUNSET BLVD	E	MCSWAIN DR, SUNSET BLVD & CHRIS DR
100000163	4947	2	5.350454			
100000163	4947	3	4.931019			
100000163	4947	4	5.491802			
100000163	4947	5	4.645172			
100000163	4947	6	5.288937			
100000163	4947	7	5.804853			
100000163	4947	8	5.942528			
100000163	4947	9	5.554682			
100000163	4947	10	6.24799			
100000163	5388	1	4.434068	SUNSET BLVD	W	MCSWAIN DR, SUNSET BLVD & CHRIS DR
100000163	5388	2	4.235747			

Node	Superlink	Run	Average Control Delay	Approach Street Name	Direction	Intersection
100000163	5388	3	4.902402			
100000163	5388	4	4.383065			
100000163	5388	5	5.180779			
100000163	5388	6	4.598673			
100000163	5388	7	3.734271			
100000163	5388	8	3.731549			
100000163	5388	9	4.151174			
100000163	5388	10	4.520848			
100000163	5389	1	19.192236	MCSWAIN DR	S	MCSWAIN DR, SUNSET BLVD & CHRIS DR
100000163	5389	2	16.348812			
100000163	5389	3	15.003023			
100000163	5389	4	15.921292			
100000163	5389	5	16.863825			
100000163	5389	6	16.87775			
100000163	5389	7	16.00382			
100000163	5389	8	15.960786			
100000163	5389	9	19.233055			
100000163	5389	10	15.97821			
100000163	5418	1	74.060053	CHRIS DR	N	MCSWAIN DR, SUNSET BLVD & CHRIS DR
100000163	5418	2	84.210783			
100000163	5418	3	74.309635			
100000163	5418	4	84.49525			
100000163	5418	5	77.630815			
100000163	5418	6	68.682583			
100000163	5418	7	89.047702			
100000163	5418	8	82.912482			
100000163	5418	9	82.908604			
100000163	5418	10	74.150135			
100000164	3354	1	0	I-26 EXIT 102 EB OFF RAMP	W	LAKE MURRAY BLVD & I-26 EXIT 102 EB OFF RAMF
100000164	3354	2	0			
100000164	3354	3	0			
100000164	3354	4	0			
100000164	3354	5	0			
100000164	3354	6	0			
100000164	3354	7	0			
100000164	3354	8	0			
100000164	3354	9	0			
100000164	3354	10	0			
100000164	5084	1	0	LAKE MURRAY BLVD	E	LAKE MURRAY BLVD & I-26 EXIT 102 EB OFF RAMF
100000164	5084	2	0			
100000164	5084	3	0			
100000164	5084	4	0			
100000164	5084	5	0			
100000164	5084	6	0			
100000164	5084	7	0			
100000164	5084	8	0			
100000164	5084	9	0			
100000164	5084	10	0			
100000164	5085	1	0.000478	LAKE MURRAY BLVD	W	LAKE MURRAY BLVD & I-26 EXIT 102 EB OFF RAMF
100000164	5085	2	0			
100000164	5085	3	0			
100000164	5085	4	0			
100000164	5085	5	0.0015			
100000164	5085	6	0.001353			
100000164	5085	7	0			
100000164	5085	8	0			
100000164	5085	9	0			
100000164	5085	10	0.000336			
100000165	3330	1	40.09247	EXIT 103 WB OFF RAMP	SE	HARBISON BLVD, EXIT 103 WB OFF RAMP, WOODCROSS DR & EXIT 103 WB ON RAMP
100000165	3330	2	44.696739			
100000165	3330	3	46.190661			
100000165	3330	4	42.759288			
100000165	3330	5	40.199048			
100000165	3330	6	39.223155			
100000165	3330	7	43.138714			
100000165	3330	8	39.613612			
100000165	3330	9	49.682278			
100000165	3330	10	49.610395			
100000165	5096	1	7.22074	HARBISON BLVD	NE	HARBISON BLVD, EXIT 103 WB OFF RAMP, WOODCROSS DR & EXIT 103 WB ON RAMP
100000165	5096	2	6.512188			
100000165	5096	3	3.896929			
100000165	5096	4	8.595872			
100000165	5096	5	9.865616			
100000165	5096	6	4.791446			
100000165	5096	7	4.147367			
100000165	5096	8	5.679627			
100000165	5096	9	8.327518			
100000165	5096	10	2.309097			
100000165	5102	1	3.441029	HARBISON BLVD	SW	HARBISON BLVD, EXIT 103 WB OFF RAMP, WOODCROSS DR & EXIT 103 WB ON RAMP
100000165	5102	2	3.091927			
100000165	5102	3	3.551091			
100000165	5102	4	3.632393			
100000165	5102	5	3.551507			
100000165	5102	6	3.383209			
100000165	5102	7	2.949901			
100000165	5102	8	3.313433			
100000165	5102	9	2.515896			
100000165	5102	10	3.38064			
100000165	5103	1	50.388168	WOODCROSS DR	NW	HARBISON BLVD, EXIT 103 WB OFF RAMP, WOODCROSS DR & EXIT 103 WB ON RAMP
100000165	5103	2	48.858246			
100000165	5103	3	50.88297			
100000165	5103	4	51.478897			
100000165	5103	5	48.408074			
100000165	5103	6	47.758238			
100000165	5103	7	45.643456			
100000165	5103	8	48.938263			
100000165	5103	9	47.139167			
100000165	5103	10	52.643296			
100000166	3343	1	0	I-26 EXIT 102 EBL OFF RAMP	E	LAKE MURRAY BLVD & I-26 EXIT 102 EBL OFF RAMP
100000166	3343	2	0			
100000166	3343	3	0			
100000166	3343	4	0			
100000166	3343	5	0			
100000166	3343	6	0			
100000166	3343	7	0			
100000166	3343	8	0			
100000166	3343	9	0			
100000166	3343	10	0			
100000166	5087	1	0	LAKE MURRAY BLVD	E	LAKE MURRAY BLVD & I-26 EXIT 102 EBL OFF RAMP
100000166	5087	2	0			
100000166	5087	3	0			
100000166	5087	4	0			

Node	Superlink	Run	Average Control Delay	Approach Street Name	Direction	Intersection
100000166	5087	5	0			
100000166	5087	6	0			
100000166	5087	7	0			
100000166	5087	8	0			
100000166	5087	9	0			
100000166	5087	10	0			
100000166	5088	1	0	LAKE MURRAY BLVD	W	LAKE MURRAY BLVD & I-26 EXIT 102 EBL OFF RAMP
100000166	5088	2	0			
100000166	5088	3	0			
100000166	5088	4	0			
100000166	5088	5	0			
100000166	5088	6	0			
100000166	5088	7	0			
100000166	5088	8	0			
100000166	5088	9	0			
100000166	5088	10	0			
100000167	3339	1	0	I-26 EXIT 102 WBL OFF RAMP	W	I-26 EXIT 102 WBL OFF RAMP & LAKE MURRAY BLVD
100000167	3339	2	0			
100000167	3339	3	0			
100000167	3339	4	0			
100000167	3339	5	0			
100000167	3339	6	0			
100000167	3339	7	0			
100000167	3339	8	0			
100000167	3339	9	0			
100000167	3339	10	0			
100000167	5088	1	0	LAKE MURRAY BLVD	E	I-26 EXIT 102 WBL OFF RAMP & LAKE MURRAY BLVD
100000167	5088	2	0			
100000167	5088	3	0			
100000167	5088	4	0			
100000167	5088	5	0			
100000167	5088	6	0			
100000167	5088	7	0			
100000167	5088	8	0			
100000167	5088	9	0			
100000167	5088	10	0			
100000167	5090	1	0	LAKE MURRAY BLVD	W	I-26 EXIT 102 WBL OFF RAMP & LAKE MURRAY BLVD
100000167	5090	2	0			
100000167	5090	3	0			
100000167	5090	4	0			
100000167	5090	5	0			
100000167	5090	6	0			
100000167	5090	7	0			
100000167	5090	8	0			
100000167	5090	9	0			
100000167	5090	10	0			
100000168	5366	1	22.35275	LEAPHART RD	N	SUNSET BLVD & LEAPHART RD
100000168	5366	2	21.59068			
100000168	5366	3	21.732891			
100000168	5366	4	21.777484			
100000168	5366	5	22.053769			
100000168	5366	6	20.730336			
100000168	5366	7	22.529638			
100000168	5366	8	20.247928			
100000168	5366	9	20.436296			
100000168	5366	10	22.445935			
100000168	5368	1	3.617801	SUNSET BLVD	E	SUNSET BLVD & LEAPHART RD
100000168	5368	2	4.011488			
100000168	5368	3	4.42789			
100000168	5368	4	4.131434			
100000168	5368	5	3.907015			
100000168	5368	6	4.211294			
100000168	5368	7	3.529406			
100000168	5368	8	4.025533			
100000168	5368	9	4.260914			
100000168	5368	10	4.077499			
100000168	5372	1	6.57923	SUNSET BLVD	W	SUNSET BLVD & LEAPHART RD
100000168	5372	2	7.454486			
100000168	5372	3	7.093111			
100000168	5372	4	7.085626			
100000168	5372	5	6.208775			
100000168	5372	6	9.026727			
100000168	5372	7	7.10014			
100000168	5372	8	6.728324			
100000168	5372	9	7.487828			
100000168	5372	10	6.171406			
100000171	3342	1	0	I-26 EXIT 102 WB OFF RAMP	E	LAKE MURRAY BLVD & I-26 EXIT 102 WB OFF RAMP
100000171	3342	2	0			
100000171	3342	3	0			
100000171	3342	4	0			
100000171	3342	5	0			
100000171	3342	6	0			
100000171	3342	7	0			
100000171	3342	8	0			
100000171	3342	9	0			
100000171	3342	10	0			
100000171	5092	1	0.007808	LAKE MURRAY BLVD	E	LAKE MURRAY BLVD & I-26 EXIT 102 WB OFF RAMP
100000171	5092	2	0.012378			
100000171	5092	3	0.004082			
100000171	5092	4	0.009716			
100000171	5092	5	0.002565			
100000171	5092	6	0.007059			
100000171	5092	7	0.005566			
100000171	5092	8	0.007673			
100000171	5092	9	0.010048			
100000171	5092	10	0.011162			
100000171	5093	1	0	LAKE MURRAY BLVD	W	LAKE MURRAY BLVD & I-26 EXIT 102 WB OFF RAMP
100000171	5093	2	0			
100000171	5093	3	0			
100000171	5093	4	0			
100000171	5093	5	0			
100000171	5093	6	0			
100000171	5093	7	0			
100000171	5093	8	0			
100000171	5093	9	0			
100000171	5093	10	0			
100000173	3212	1	56.755167		103 SE	HARBISON BLVD, 103 & RAMP
100000173	3212	2	51.819448			
100000173	3212	3	49.471488			
100000173	3212	4	35.768866			
100000173	3212	5	46.49046			
100000173	3212	6	47.017107			

Node	Superlink	Run	Average Control Delay	Approach Street Name	Direction	Intersection
100000173	3212	7	49.715321			
100000173	3212	8	46.347053			
100000173	3212	9	54.814769			
100000173	3212	10	45.778391			
100000173	3213	1	8.653458	103	S	HARBISON BLVD, 103 & RAMP
100000173	3213	2	7.879314			
100000173	3213	3	8.606622			
100000173	3213	4	6.986359			
100000173	3213	5	7.267008			
100000173	3213	6	8.451475			
100000173	3213	7	7.752075			
100000173	3213	8	7.265711			
100000173	3213	9	7.829828			
100000173	3213	10	8.098757			
100000173	5097	1	2.359343	HARBISON BLVD	NE	HARBISON BLVD, 103 & RAMP
100000173	5097	2	2.930487			
100000173	5097	3	2.871413			
100000173	5097	4	3.519626			
100000173	5097	5	4.622509			
100000173	5097	6	3.360294			
100000173	5097	7	3.63876			
100000173	5097	8	3.093854			
100000173	5097	9	2.471019			
100000173	5097	10	3.540076			
100000173	5099	1	6.693044	HARBISON BLVD	SW	HARBISON BLVD, 103 & RAMP
100000173	5099	2	4.946501			
100000173	5099	3	5.876871			
100000173	5099	4	6.751432			
100000173	5099	5	5.163975			
100000173	5099	6	5.619948			
100000173	5099	7	4.997286			
100000173	5099	8	6.097601			
100000173	5099	9	6.469298			
100000173	5099	10	5.789833			
100000175	3234	1	45.201434	RAMP	SE	PINEY GROVE RD & RAMP
100000175	3234	2	41.682025			
100000175	3234	3	43.476219			
100000175	3234	4	43.159705			
100000175	3234	5	55.146144			
100000175	3234	6	42.460875			
100000175	3234	7	42.816537			
100000175	3234	8	41.44491			
100000175	3234	9	40.935568			
100000175	3234	10	38.16562			
100000175	5112	1	8.878641	PINEY GROVE RD	W	PINEY GROVE RD & RAMP
100000175	5112	2	7.784696			
100000175	5112	3	4.998621			
100000175	5112	4	8.789075			
100000175	5112	5	5.943804			
100000175	5112	6	6.658243			
100000175	5112	7	8.077838			
100000175	5112	8	7.098155			
100000175	5112	9	7.921265			
100000175	5112	10	6.385905			
100000175	6544	1	7.324527	PINEY GROVE RD	E	PINEY GROVE RD & RAMP
100000175	6544	2	8.153873			
100000175	6544	3	6.955254			
100000175	6544	4	7.002384			
100000175	6544	5	6.95479			
100000175	6544	6	9.225513			
100000175	6544	7	7.715835			
100000175	6544	8	8.193022			
100000175	6544	9	7.809623			
100000175	6544	10	7.983386			
100000177	5112	1	13.755621	PINEY GROVE RD	E	PINEY GROVE RD, EXIT 104 WB OFF RAMP & EXIT 104 WB ON RAMP
100000177	5112	2	12.504833			
100000177	5112	3	11.189552			
100000177	5112	4	12.971045			
100000177	5112	5	11.435591			
100000177	5112	6	13.002633			
100000177	5112	7	14.82243			
100000177	5112	8	13.590451			
100000177	5112	9	12.214593			
100000177	5112	10	14.078207			
100000177	5113	1	24.210853	PINEY GROVE RD	W	PINEY GROVE RD, EXIT 104 WB OFF RAMP & EXIT 104 WB ON RAMP
100000177	5113	2	24.733751			
100000177	5113	3	21.185397			
100000177	5113	4	27.236553			
100000177	5113	5	21.83595			
100000177	5113	6	21.360223			
100000177	5113	7	24.610028			
100000177	5113	8	20.500674			
100000177	5113	9	27.47294			
100000177	5113	10	23.155324			
100000177	6513	1	6.53187	EXIT 104 WB OFF RAMP	N	PINEY GROVE RD, EXIT 104 WB OFF RAMP & EXIT 104 WB ON RAMP
100000177	6513	2	7.192			
100000177	6513	3	6.895313			
100000177	6513	4	6.717692			
100000177	6513	5	7.378954			
100000177	6513	6	6.735385			
100000177	6513	7	6.891039			
100000177	6513	8	7.905487			
100000177	6513	9	6.811806			
100000177	6513	10	6.491139			
100000177	6514	1	17.6017	EXIT 104 WB OFF RAMP	N	PINEY GROVE RD, EXIT 104 WB OFF RAMP & EXIT 104 WB ON RAMP
100000177	6514	2	16.612548			
100000177	6514	3	16.907587			
100000177	6514	4	16.725941			
100000177	6514	5	16.79476			
100000177	6514	6	17.266416			
100000177	6514	7	17.429783			
100000177	6514	8	15.650082			
100000177	6514	9	15.624501			
100000177	6514	10	18.370928			
100000178	3301	1	34.496399	RAMP	SE	ST ANDREWS RD, RAMP, WOODLAND HILLS RD & I-26 EXIT 106 EB ON RAMP
100000178	3301	2	32.788526			
100000178	3301	3	30.787403			
100000178	3301	4	34.080214			
100000178	3301	5	32.177544			
100000178	3301	6	32.823132			
100000178	3301	7	34.384176			
100000178	3301	8	31.974963			

Node	Superlink	Run	Average Control Delay	Approach Street Name	Direction	Intersection
100000178	3301	9	33.370986			
100000178	3301	10	33.802775			
100000178	5118	1	3.150552	ST ANDREWS RD	E	ST ANDREWS RD, RAMP, WOODLAND HILLS RD & I-26 EXIT 106 EB ON RAMP
100000178	5118	2	2.983392			
100000178	5118	3	2.963635			
100000178	5118	4	3.188629			
100000178	5118	5	3.329987			
100000178	5118	6	3.152964			
100000178	5118	7	3.282855			
100000178	5118	8	3.301294			
100000178	5118	9	3.252613			
100000178	5118	10	3.117398			
100000178	5119	1	23.200117	WOODLAND HILLS RD	N	ST ANDREWS RD, RAMP, WOODLAND HILLS RD & I-26 EXIT 106 EB ON RAMP
100000178	5119	2	24.917569			
100000178	5119	3	22.691877			
100000178	5119	4	26.538946			
100000178	5119	5	22.893243			
100000178	5119	6	22.597977			
100000178	5119	7	24.393941			
100000178	5119	8	23.836304			
100000178	5119	9	23.683692			
100000178	5119	10	23.651592			
100000178	5120	1	12.632688	ST ANDREWS RD	W	ST ANDREWS RD, RAMP, WOODLAND HILLS RD & I-26 EXIT 106 EB ON RAMP
100000178	5120	2	10.133622			
100000178	5120	3	8.917807			
100000178	5120	4	8.018588			
100000178	5120	5	10.381747			
100000178	5120	6	9.427605			
100000178	5120	7	10.965587			
100000178	5120	8	12.310366			
100000178	5120	9	10.122768			
100000178	5120	10	13.551038			
100000179	3219	1	0	RAMP	S	ST ANDREWS RD & RAMP
100000179	3219	2	0			
100000179	3219	3	0			
100000179	3219	4	0			
100000179	3219	5	0			
100000179	3219	6	0			
100000179	3219	7	0			
100000179	3219	8	0			
100000179	3219	9	0			
100000179	3219	10	0			
100000179	5116	1	22.183619	ST ANDREWS RD	E	ST ANDREWS RD & RAMP
100000179	5116	2	25.704006			
100000179	5116	3	19.745452			
100000179	5116	4	18.537713			
100000179	5116	5	21.679452			
100000179	5116	6	22.052669			
100000179	5116	7	23.971218			
100000179	5116	8	25.352491			
100000179	5116	9	20.119995			
100000179	5116	10	23.792011			
100000179	5118	1	0	ST ANDREWS RD	W	ST ANDREWS RD & RAMP
100000179	5118	2	0			
100000179	5118	3	0			
100000179	5118	4	0			
100000179	5118	5	0			
100000179	5118	6	0			
100000179	5118	7	0			
100000179	5118	8	0			
100000179	5118	9	0			
100000179	5118	10	0			
100000182	3292	1	0	EXIT 106 WB OFF RAMP	NE	ST ANDREWS RD, EXIT 106 WB OFF RAMP & EXIT 106 WB ON RAMP
100000182	3292	2	0			
100000182	3292	3	0			
100000182	3292	4	0			
100000182	3292	5	0			
100000182	3292	6	0			
100000182	3292	7	0			
100000182	3292	8	0			
100000182	3292	9	0			
100000182	3292	10	0			
100000182	5123	1	0	ST ANDREWS RD	E	ST ANDREWS RD, EXIT 106 WB OFF RAMP & EXIT 106 WB ON RAMP
100000182	5123	2	0			
100000182	5123	3	0			
100000182	5123	4	0			
100000182	5123	5	0			
100000182	5123	6	0			
100000182	5123	7	0			
100000182	5123	8	0			
100000182	5123	9	0			
100000182	5123	10	0			
100000182	5124	1	0	ST ANDREWS RD	SW	ST ANDREWS RD, EXIT 106 WB OFF RAMP & EXIT 106 WB ON RAMP
100000182	5124	2	0			
100000182	5124	3	0			
100000182	5124	4	0			
100000182	5124	5	0			
100000182	5124	6	0			
100000182	5124	7	0			
100000182	5124	8	0			
100000182	5124	9	0			
100000182	5124	10	0			
100000184	5499	1	14.06618	N ARROWWOOD RD	S	ARROWWOOD RD, BUSH RIVER RD & N ARROWWOOD RD
100000184	5499	2	14.262297			
100000184	5499	3	15.511202			
100000184	5499	4	16.237134			
100000184	5499	5	16.239366			
100000184	5499	6	14.354694			
100000184	5499	7	16.508431			
100000184	5499	8	17.295147			
100000184	5499	9	14.377151			
100000184	5499	10	16.579977			
100000184	5500	1	36.239888	ARROWWOOD RD	N	ARROWWOOD RD, BUSH RIVER RD & N ARROWWOOD RD
100000184	5500	2	37.512739			
100000184	5500	3	40.872903			
100000184	5500	4	38.875384			
100000184	5500	5	38.848064			
100000184	5500	6	34.341074			
100000184	5500	7	37.682548			
100000184	5500	8	40.250685			
100000184	5500	9	36.277084			
100000184	5500	10	39.943286			

Node	Superlink	Run	Average Control Delay	Approach Street Name	Direction	Intersection
100000184	6497	1	7.563826	BUSH RIVER RD	W	ARROWWOOD RD, BUSH RIVER RD & N ARROWWOOD RD
100000184	6497	2	6.971629			
100000184	6497	3	7.384399			
100000184	6497	4	9.05904			
100000184	6497	5	7.304131			
100000184	6497	6	8.413767			
100000184	6497	7	7.816229			
100000184	6497	8	8.20352			
100000184	6497	9	8.469605			
100000184	6497	10	6.369013			
100000184	6505	1	8.679359	BUSH RIVER RD	E	ARROWWOOD RD, BUSH RIVER RD & N ARROWWOOD RD
100000184	6505	2	7.908492			
100000184	6505	3	8.526207			
100000184	6505	4	9.264424			
100000184	6505	5	8.496449			
100000184	6505	6	9.214275			
100000184	6505	7	7.94867			
100000184	6505	8	7.819061			
100000184	6505	9	7.890537			
100000184	6505	10	7.714252			
100000185	3230	1	18.467112	RAMP	W	GREYSTONE BLVD, RAMP & I-126 EB ON RAMP FROM GREYSTONE BLVD
100000185	3230	2	19.624089			
100000185	3230	3	22.749029			
100000185	3230	4	15.207455			
100000185	3230	5	20.060629			
100000185	3230	6	15.420597			
100000185	3230	7	20.561357			
100000185	3230	8	21.197878			
100000185	3230	9	16.36878			
100000185	3230	10	21.830971			
100000185	5140	1	0.388318	GREYSTONE BLVD	N	GREYSTONE BLVD, RAMP & I-126 EB ON RAMP FROM GREYSTONE BLVD
100000185	5140	2	0.148497			
100000185	5140	3	0.322408			
100000185	5140	4	0.34796			
100000185	5140	5	0.414763			
100000185	5140	6	0.221174			
100000185	5140	7	0.239021			
100000185	5140	8	0.032855			
100000185	5140	9	0.31862			
100000185	5140	10	0.196417			
100000185	5141	1	0.935206	GREYSTONE BLVD	S	GREYSTONE BLVD, RAMP & I-126 EB ON RAMP FROM GREYSTONE BLVD
100000185	5141	2	0.636299			
100000185	5141	3	0.819046			
100000185	5141	4	0.742576			
100000185	5141	5	0.491849			
100000185	5141	6	0.710265			
100000185	5141	7	0.761131			
100000185	5141	8	0.629402			
100000185	5141	9	0.657959			
100000185	5141	10	0.902323			
100000186	4949	1	9.114013	SUNSET BLVD	W	HARBOR DR, SUNSET BLVD & E HOSPITAL DR
100000186	4949	2	8.212892			
100000186	4949	3	7.458124			
100000186	4949	4	9.710458			
100000186	4949	5	8.236809			
100000186	4949	6	6.849009			
100000186	4949	7	8.467954			
100000186	4949	8	7.347807			
100000186	4949	9	10.441526			
100000186	4949	10	8.45281			
100000186	5386	1	94.280318	HARBOR DR	N	HARBOR DR, SUNSET BLVD & E HOSPITAL DR
100000186	5386	2	81.772069			
100000186	5386	3	63.60831			
100000186	5386	4	77.3046			
100000186	5386	5	102.841799			
100000186	5386	6	50.874353			
100000186	5386	7	103.40695			
100000186	5386	8	59.764829			
100000186	5386	9	89.275422			
100000186	5386	10	70.610222			
100000186	5387	1	66.764623	E HOSPITAL DR	S	HARBOR DR, SUNSET BLVD & E HOSPITAL DR
100000186	5387	2	62.840658			
100000186	5387	3	62.035878			
100000186	5387	4	59.901941			
100000186	5387	5	59.080834			
100000186	5387	6	54.185853			
100000186	5387	7	59.030516			
100000186	5387	8	57.445846			
100000186	5387	9	64.876875			
100000186	5387	10	60.659679			
100000186	6762	1	20.736123	SUNSET BLVD	E	HARBOR DR, SUNSET BLVD & E HOSPITAL DR
100000186	6762	2	14.635942			
100000186	6762	3	13.15085			
100000186	6762	4	15.227796			
100000186	6762	5	17.15933			
100000186	6762	6	11.621362			
100000186	6762	7	15.154974			
100000186	6762	8	12.170517			
100000186	6762	9	17.480588			
100000186	6762	10	13.148732			
100000187	6057	1	16.902553	BROAD RIVER RD	NW	BROAD RIVER RD, BRIARGATE CIR & MARLEY DR
100000187	6057	2	18.111674			
100000187	6057	3	13.571062			
100000187	6057	4	16.384331			
100000187	6057	5	18.849608			
100000187	6057	6	19.168774			
100000187	6057	7	15.479017			
100000187	6057	8	21.704562			
100000187	6057	9	14.86299			
100000187	6057	10	22.356568			
100000187	6059	1	5.942072	BROAD RIVER RD	SE	BROAD RIVER RD, BRIARGATE CIR & MARLEY DR
100000187	6059	2	7.201066			
100000187	6059	3	11.169705			
100000187	6059	4	9.687269			
100000187	6059	5	14.453731			
100000187	6059	6	16.005435			
100000187	6059	7	14.587561			
100000187	6059	8	21.622154			
100000187	6059	9	5.566484			
100000187	6059	10	12.327547			
100000187	6060	1	74.094515	MARLEY DR	SW	BROAD RIVER RD, BRIARGATE CIR & MARLEY DR
100000187	6060	2	64.293191			

Node	Superlink	Run	Average Control Delay	Approach Street Name	Direction	Intersection
100000187	6060	3	99.040977			
100000187	6060	4	83.821667			
100000187	6060	5	104.526232			
100000187	6060	6	100.132186			
100000187	6060	7	65.681851			
100000187	6060	8	135.895854			
100000187	6060	9	59.059201			
100000187	6060	10	141.720525			
100000187	6061	1	26.30015	BRIARGATE CIR	NE	BROAD RIVER RD, BRIARGATE CIR & MARLEY DR
100000187	6061	2	27.953885			
100000187	6061	3	23.782678			
100000187	6061	4	34.856325			
100000187	6061	5	34.634674			
100000187	6061	6	30.977864			
100000187	6061	7	24.448238			
100000187	6061	8	29.340256			
100000187	6061	9	25.309413			
100000187	6061	10	28.366013			
100000188	3221	1	15.148172	RAMP	W	GREYSTONE BLVD & RAMP
100000188	3221	2	22.525976			
100000188	3221	3	17.900086			
100000188	3221	4	25.841678			
100000188	3221	5	21.266228			
100000188	3221	6	21.878673			
100000188	3221	7	21.097464			
100000188	3221	8	18.676127			
100000188	3221	9	27.665331			
100000188	3221	10	20.606934			
100000188	5143	1	1.160661	GREYSTONE BLVD	N	GREYSTONE BLVD & RAMP
100000188	5143	2	0.826964			
100000188	5143	3	1.027557			
100000188	5143	4	0.93509			
100000188	5143	5	0.894827			
100000188	5143	6	0.813737			
100000188	5143	7	0.6809			
100000188	5143	8	0.626072			
100000188	5143	9	0.723009			
100000188	5143	10	1.171601			
100000188	5144	1	0.039622	GREYSTONE BLVD	S	GREYSTONE BLVD & RAMP
100000188	5144	2	0.084997			
100000188	5144	3	0.065178			
100000188	5144	4	0.158611			
100000188	5144	5	0.050861			
100000188	5144	6	0.075069			
100000188	5144	7	0.086166			
100000188	5144	8	0.034417			
100000188	5144	9	0.098003			
100000188	5144	10	0.09098			
100000189	4346	1	39.1952	I-20 EXIT 65 WB OFF RAMP	SW	I-20 EXIT 65 WB OFF RAMP, BROAD RIVER RD & RAMF
100000189	4346	2	40.416275			
100000189	4346	3	39.840129			
100000189	4346	4	39.159805			
100000189	4346	5	41.626163			
100000189	4346	6	44.2075			
100000189	4346	7	44.656361			
100000189	4346	8	40.744493			
100000189	4346	9	40.20525			
100000189	4346	10	42.585945			
100000189	6057	1	39.5529	BROAD RIVER RD	SE	I-20 EXIT 65 WB OFF RAMP, BROAD RIVER RD & RAMF
100000189	6057	2	30.936438			
100000189	6057	3	32.846251			
100000189	6057	4	34.079107			
100000189	6057	5	44.842924			
100000189	6057	6	48.411276			
100000189	6057	7	40.742659			
100000189	6057	8	51.407855			
100000189	6057	9	11.682442			
100000189	6057	10	47.187548			
100000189	6447	1	6.49561	BROAD RIVER RD	NW	I-20 EXIT 65 WB OFF RAMP, BROAD RIVER RD & RAMF
100000189	6447	2	8.164897			
100000189	6447	3	6.446334			
100000189	6447	4	6.509727			
100000189	6447	5	6.053119			
100000189	6447	6	6.773599			
100000189	6447	7	6.719825			
100000189	6447	8	5.454121			
100000189	6447	9	5.7253			
100000189	6447	10	7.672662			
100000190	4341	1	46.145712	I-20 EXIT 65 EB OFF RAMP	E	BROAD RIVER RD, I-20 EXIT 65 EB OFF RAMP & SERVICE RD
100000190	4341	2	45.506018			
100000190	4341	3	42.393618			
100000190	4341	4	45.340552			
100000190	4341	5	43.740566			
100000190	4341	6	46.165687			
100000190	4341	7	38.68965			
100000190	4341	8	42.952997			
100000190	4341	9	47.274207			
100000190	4341	10	40.827255			
100000190	5148	1	1.683607	BROAD RIVER RD	SE	BROAD RIVER RD, I-20 EXIT 65 EB OFF RAMP & SERVICE RD
100000190	5148	2	1.636512			
100000190	5148	3	1.758572			
100000190	5148	4	1.695347			
100000190	5148	5	1.635794			
100000190	5148	6	1.758956			
100000190	5148	7	1.688756			
100000190	5148	8	1.579829			
100000190	5148	9	1.685994			
100000190	5148	10	1.596166			
100000190	6445	1	13.258956	BROAD RIVER RD	NW	BROAD RIVER RD, I-20 EXIT 65 EB OFF RAMP & SERVICE RD
100000190	6445	2	14.731953			
100000190	6445	3	15.788126			
100000190	6445	4	14.045256			
100000190	6445	5	15.054169			
100000190	6445	6	13.16199			
100000190	6445	7	15.467945			
100000190	6445	8	14.825355			
100000190	6445	9	15.064912			
100000190	6445	10	14.525519			
100000190	6446	1		SERVICE RD	SW	BROAD RIVER RD, I-20 EXIT 65 EB OFF RAMP & SERVICE RD
100000190	6446	2				
100000190	6446	3				
100000190	6446	4				

Node	Superlink	Run	Average Control Delay	Approach Street Name	Direction	Intersection
100000190	6446	5				
100000190	6446	6				
100000190	6446	7				
100000190	6446	8				
100000190	6446	9				
100000190	6446	10				
100000191	5399	1	0.05573	HARBOR DR	S	HARBOR DR & OAKWOOD DR
100000191	5399	2	0.232663			
100000191	5399	3	0.007825			
100000191	5399	4	0.148136			
100000191	5399	5	0.040834			
100000191	5399	6	0.075645			
100000191	5399	7	0.040615			
100000191	5399	8	0.067827			
100000191	5399	9	0.05177			
100000191	5399	10	0.072613			
100000191	5414	1	6.373331	OAKWOOD DR	NE	HARBOR DR & OAKWOOD DR
100000191	5414	2	6.731315			
100000191	5414	3	6.614375			
100000191	5414	4	6.595993			
100000191	5414	5	6.508679			
100000191	5414	6	6.140628			
100000191	5414	7	6.872897			
100000191	5414	8	6.327859			
100000191	5414	9	6.166731			
100000191	5414	10	6.354646			
100000191	5420	1	0	HARBOR DR	N	HARBOR DR & OAKWOOD DR
100000191	5420	2	0			
100000191	5420	3	0			
100000191	5420	4	0			
100000191	5420	5	0			
100000191	5420	6	0			
100000191	5420	7	0			
100000191	5420	8	0			
100000191	5420	9	0			
100000191	5420	10	0			
100000193	4350	1	22.256054	I-20 EXIT 68 EB OFF RAMP	E	BUCKNER RD, MONTICELLO RD & I-20 EXIT 68 EB OFF RAMP
100000193	4350	2	21.40935			
100000193	4350	3	21.06749			
100000193	4350	4	20.633533			
100000193	4350	5	24.430332			
100000193	4350	6	26.610217			
100000193	4350	7	23.798115			
100000193	4350	8	27.160858			
100000193	4350	9	23.496629			
100000193	4350	10	23.059843			
100000193	5154	1	18.028028	MONTICELLO RD	N	BUCKNER RD, MONTICELLO RD & I-20 EXIT 68 EB OFF RAMP
100000193	5154	2	20.873519			
100000193	5154	3	18.972011			
100000193	5154	4	20.767662			
100000193	5154	5	21.345904			
100000193	5154	6	20.468281			
100000193	5154	7	19.56373			
100000193	5154	8	17.073202			
100000193	5154	9	20.113485			
100000193	5154	10	21.531941			
100000193	5155	1	15.3242	MONTICELLO RD	SE	BUCKNER RD, MONTICELLO RD & I-20 EXIT 68 EB OFF RAMP
100000193	5155	2	15.253938			
100000193	5155	3	13.89289			
100000193	5155	4	13.987737			
100000193	5155	5	14.408824			
100000193	5155	6	14.243154			
100000193	5155	7	12.74325			
100000193	5155	8	13.19391			
100000193	5155	9	14.541405			
100000193	5155	10	14.902962			
100000193	5163	1	11.527586	BUCKNER RD	SW	BUCKNER RD, MONTICELLO RD & I-20 EXIT 68 EB OFF RAMP
100000193	5163	2	8.522987			
100000193	5163	3	9.7367			
100000193	5163	4	8.979714			
100000193	5163	5	10.904648			
100000193	5163	6	12.746745			
100000193	5163	7	13.124112			
100000193	5163	8	9.43293			
100000193	5163	9	12.557652			
100000193	5163	10	10.763524			
100000195	5150	1	3.431162	BROAD RIVER RD	SE	LONGCREEK DR & BROAD RIVER RD
100000195	5150	2	3.303913			
100000195	5150	3	3.219866			
100000195	5150	4	3.666774			
100000195	5150	5	3.294554			
100000195	5150	6	4.320123			
100000195	5150	7	3.621074			
100000195	5150	8	3.545507			
100000195	5150	9	3.425342			
100000195	5150	10	3.970703			
100000195	6049	1	4.520604	BROAD RIVER RD	NW	LONGCREEK DR & BROAD RIVER RD
100000195	6049	2	5.221694			
100000195	6049	3	5.274626			
100000195	6049	4	6.276616			
100000195	6049	5	5.756367			
100000195	6049	6	5.605695			
100000195	6049	7	6.395549			
100000195	6049	8	4.791454			
100000195	6049	9	5.969247			
100000195	6049	10	4.796669			
100000195	6052	1	16.166451	LONGCREEK DR	SW	LONGCREEK DR & BROAD RIVER RD
100000195	6052	2	17.385176			
100000195	6052	3	15.405509			
100000195	6052	4	16.159667			
100000195	6052	5	15.539597			
100000195	6052	6	14.525583			
100000195	6052	7	17.451416			
100000195	6052	8	14.803253			
100000195	6052	9	15.474883			
100000195	6052	10	15.463225			
100000196	5166	1	1.369556	MONTICELLO RD	SE	SERVICE RD, MONTICELLO RD & RAMP
100000196	5166	2	2.035314			
100000196	5166	3	1.974751			
100000196	5166	4	1.375054			
100000196	5166	5	1.781378			
100000196	5166	6	1.075301			

Node	Superlink	Run	Average Control Delay	Approach Street Name	Direction	Intersection
100000196	5166	7	1.292951			
100000196	5166	8	1.59482			
100000196	5166	9	1.938167			
100000196	5166	10	1.65514			
100000196	5169	1	9.172391	SERVICE RD	SW	SERVICE RD, MONTICELLO RD & RAMP
100000196	5169	2	15.350011			
100000196	5169	3	13.258059			
100000196	5169	4	12.940434			
100000196	5169	5	15.342147			
100000196	5169	6	15.521572			
100000196	5169	7	13.531417			
100000196	5169	8	12.599825			
100000196	5169	9	10.788868			
100000196	5169	10	11.4211			
100000196	5172	1	0.905672	MONTICELLO RD	NW	SERVICE RD, MONTICELLO RD & RAMP
100000196	5172	2	1.304574			
100000196	5172	3	1.450365			
100000196	5172	4	1.166441			
100000196	5172	5	1.543914			
100000196	5172	6	1.29165			
100000196	5172	7	1.335899			
100000196	5172	8	1.423407			
100000196	5172	9	1.610178			
100000196	5172	10	1.565789			
100000198	4354	1	0	RAMP	N	RAMP & I-20 EXIT 68 EB ON RAMP
100000198	4354	2	0			
100000198	4354	3	0			
100000198	4354	4	0			
100000198	4354	5	0			
100000198	4354	6	0			
100000198	4354	7	0			
100000198	4354	8	0			
100000198	4354	9	0			
100000198	4354	10	0			
100000198	5158	1		RAMP	NW	RAMP & I-20 EXIT 68 EB ON RAMP
100000198	5158	2				
100000198	5158	3				
100000198	5158	4				
100000198	5158	5				
100000198	5158	6				
100000198	5158	7				
100000198	5158	8				
100000198	5158	9				
100000198	5158	10				
100000200	5174	1	6.379624	MONTICELLO RD	NW	MONTICELLO RD, PEEPLES ST & BLUE RIDGE TER
100000200	5174	2	5.396276			
100000200	5174	3	6.392142			
100000200	5174	4	5.844041			
100000200	5174	5	6.060181			
100000200	5174	6	5.269916			
100000200	5174	7	5.98113			
100000200	5174	8	6.903349			
100000200	5174	9	6.444967			
100000200	5174	10	6.696249			
100000200	6041	1	4.858061	MONTICELLO RD	SE	MONTICELLO RD, PEEPLES ST & BLUE RIDGE TER
100000200	6041	2	4.444337			
100000200	6041	3	4.234233			
100000200	6041	4	4.473743			
100000200	6041	5	4.561465			
100000200	6041	6	3.8381			
100000200	6041	7	3.974126			
100000200	6041	8	4.924241			
100000200	6041	9	4.840633			
100000200	6041	10	4.422565			
100000200	6044	1	13.375243	PEEPLES ST	NE	MONTICELLO RD, PEEPLES ST & BLUE RIDGE TER
100000200	6044	2	12.825116			
100000200	6044	3	12.262287			
100000200	6044	4	11.063909			
100000200	6044	5	13.177714			
100000200	6044	6	14.36926			
100000200	6044	7	10.733941			
100000200	6044	8	13.208713			
100000200	6044	9	13.278482			
100000200	6044	10	12.673144			
100000200	6046	1	25.753603	BLUE RIDGE TER	S	MONTICELLO RD, PEEPLES ST & BLUE RIDGE TER
100000200	6046	2	26.463299			
100000200	6046	3	25.704378			
100000200	6046	4	25.085392			
100000200	6046	5	24.811509			
100000200	6046	6	25.358811			
100000200	6046	7	27.86775			
100000200	6046	8	24.279038			
100000200	6046	9	23.399857			
100000200	6046	10	24.382293			
100000201	5157	1	1.708338	BUCKNER RD	SW	BUCKNER RD & TO BUCKNER ROAD
100000201	5157	2	1.418226			
100000201	5157	3	1.824232			
100000201	5157	4	1.066435			
100000201	5157	5	2.099229			
100000201	5157	6	1.495714			
100000201	5157	7	2.011227			
100000201	5157	8	1.145922			
100000201	5157	9	1.557994			
100000201	5157	10	2.6656			
100000201	5161	1	0.082508	TO BUCKNER ROAD	N	BUCKNER RD & TO BUCKNER ROAD
100000201	5161	2	0.438567			
100000201	5161	3	0.660988			
100000201	5161	4	0.003328			
100000201	5161	5	0			
100000201	5161	6	0.006301			
100000201	5161	7	0.062958			
100000201	5161	8	0.00377			
100000201	5161	9	0.858905			
100000201	5161	10	0.01635			
100000201	5163	1	0.00065	BUCKNER RD	NE	BUCKNER RD & TO BUCKNER ROAD
100000201	5163	2	0.000087			
100000201	5163	3	0.000571			
100000201	5163	4	0.000499			
100000201	5163	5	0.001242			
100000201	5163	6	0.00016			
100000201	5163	7	0.000508			
100000201	5163	8	0.000458			

Node	Superlink	Run	Average Control Delay	Approach Street Name	Direction	Intersection
100000201	5163	9	0.000247			
100000201	5163	10	0.000267			
100000203	5169	1		SERVICE RD	E	SERVICE RD & MONTICELLO RD
100000203	5169	2				
100000203	5169	3				
100000203	5169	4				
100000203	5169	5				
100000203	5169	6				
100000203	5169	7				
100000203	5169	8				
100000203	5169	9				
100000203	5169	10				
100000203	5171	1		MONTICELLO RD	N	SERVICE RD & MONTICELLO RD
100000203	5171	2				
100000203	5171	3				
100000203	5171	4				
100000203	5171	5				
100000203	5171	6				
100000203	5171	7				
100000203	5171	8				
100000203	5171	9				
100000203	5171	10				
100000203	5173	1	0.183186	SERVICE RD	W	SERVICE RD & MONTICELLO RD
100000203	5173	2	0.397668			
100000203	5173	3	0.284121			
100000203	5173	4	0.263373			
100000203	5173	5	0.32566			
100000203	5173	6	0.275067			
100000203	5173	7	0.400254			
100000203	5173	8	0.352341			
100000203	5173	9	0.292038			
100000203	5173	10	0.408849			
100000250	6539	1	14.076454	BUSH RIVER RD	NW	E MEADOW CT/WOODLAND VILLAGE DR, BUSH RIVER RD & OUTLET POINTE BLVD
100000250	6539	2	18.215123			
100000250	6539	3	8.266531			
100000250	6539	4	19.358541			
100000250	6539	5	16.525688			
100000250	6539	6	27.564369			
100000250	6539	7	18.330303			
100000250	6539	8	20.827731			
100000250	6539	9	23.282608			
100000250	6539	10	15.576747			
100000250	6546	1	22.965385	OUTLET POINTE BLVD	NE	E MEADOW CT/WOODLAND VILLAGE DR, BUSH RIVER RD & OUTLET POINTE BLVD
100000250	6546	2	18.390427			
100000250	6546	3	23.1197			
100000250	6546	4	23.872617			
100000250	6546	5	24.834628			
100000250	6546	6	20.200319			
100000250	6546	7	20.164263			
100000250	6546	8	24.669945			
100000250	6546	9	25.274535			
100000250	6546	10	28.186083			
100000250	6547	1	30.726581	E MEADOW CT/WOODLAND VILLAGE DR	SW	E MEADOW CT/WOODLAND VILLAGE DR, BUSH RIVER RD & OUTLET POINTE BLVD
100000250	6547	2	23.7552			
100000250	6547	3	22.321771			
100000250	6547	4	25.917877			
100000250	6547	5	28.566507			
100000250	6547	6	29.572146			
100000250	6547	7	26.930145			
100000250	6547	8	21.070758			
100000250	6547	9	23.462485			
100000250	6547	10	24.443025			
100000250	6548	1	14.484741	BUSH RIVER RD	SE	E MEADOW CT/WOODLAND VILLAGE DR, BUSH RIVER RD & OUTLET POINTE BLVD
100000250	6548	2	15.428369			
100000250	6548	3	11.217901			
100000250	6548	4	15.53791			
100000250	6548	5	13.685749			
100000250	6548	6	19.705972			
100000250	6548	7	18.093724			
100000250	6548	8	21.744382			
100000250	6548	9	20.153678			
100000250	6548	10	13.44617			
100000252	5125	1	7.275038	BUSH RIVER RD	E	MORNINGHILL DR, BUSH RIVER RD & RAMP
100000252	5125	2	7.416001			
100000252	5125	3	6.818104			
100000252	5125	4	7.000502			
100000252	5125	5	6.990728			
100000252	5125	6	6.7827			
100000252	5125	7	7.105139			
100000252	5125	8	6.735238			
100000252	5125	9	6.720451			
100000252	5125	10	6.97362			
100000252	5487	1	58.426627	MORNINGHILL DR	S	MORNINGHILL DR, BUSH RIVER RD & RAMP
100000252	5487	2	60.902746			
100000252	5487	3	63.917452			
100000252	5487	4	66.55031			
100000252	5487	5	70.071671			
100000252	5487	6	47.893433			
100000252	5487	7	58.486228			
100000252	5487	8	54.805528			
100000252	5487	9	54.214157			
100000252	5487	10	46.064729			
100000252	5488	1	21.637209	RAMP	N	MORNINGHILL DR, BUSH RIVER RD & RAMP
100000252	5488	2	20.762776			
100000252	5488	3	21.550455			
100000252	5488	4	21.070566			
100000252	5488	5	20.518996			
100000252	5488	6	20.199929			
100000252	5488	7	21.390831			
100000252	5488	8	21.151624			
100000252	5488	9	22.656766			
100000252	5488	10	21.999904			
100000252	6505	1	22.316047	BUSH RIVER RD	W	MORNINGHILL DR, BUSH RIVER RD & RAMP
100000252	6505	2	21.929007			
100000252	6505	3	22.018995			
100000252	6505	4	20.236275			
100000252	6505	5	19.951537			
100000252	6505	6	22.708389			
100000252	6505	7	22.651527			
100000252	6505	8	23.168564			
100000252	6505	9	19.631211			
100000252	6505	10	21.905407			

Node	Superlink	Run	Average Control Delay	Approach Street Name	Direction	Intersection
100000255	5038	1	3.53175	BUSH RIVER RD	E	BUSH RIVER RD & INDEPENDENCE AVE
100000255	5038	2	3.359599			
100000255	5038	3	3.365136			
100000255	5038	4	3.796615			
100000255	5038	5	3.689355			
100000255	5038	6	3.677221			
100000255	5038	7	3.979176			
100000255	5038	8	3.54364			
100000255	5038	9	4.330112			
100000255	5038	10	4.113599			
100000255	5470	1	33.957618	INDEPENDENCE AVE	N	BUSH RIVER RD & INDEPENDENCE AVE
100000255	5470	2	29.607919			
100000255	5470	3	31.660634			
100000255	5470	4	29.586205			
100000255	5470	5	35.250797			
100000255	5470	6	29.594408			
100000255	5470	7	32.686789			
100000255	5470	8	37.480346			
100000255	5470	9	33.100186			
100000255	5470	10	31.4834			
100000255	5471	1	68.730178	BUSH RIVER RD	W	BUSH RIVER RD & INDEPENDENCE AVE
100000255	5471	2	93.279774			
100000255	5471	3	150.587433			
100000255	5471	4	69.212904			
100000255	5471	5	62.569124			
100000255	5471	6	120.867638			
100000255	5471	7	85.842728			
100000255	5471	8	65.011331			
100000255	5471	9	67.207197			
100000255	5471	10	76.870483			
100000256	5131	1	6.768711	BUSH RIVER RD	W	BUSH RIVER RD & ZIMALCREST DR
100000256	5131	2	6.882298			
100000256	5131	3	6.841476			
100000256	5131	4	7.27076			
100000256	5131	5	7.552449			
100000256	5131	6	7.952217			
100000256	5131	7	7.457946			
100000256	5131	8	6.954038			
100000256	5131	9	8.603616			
100000256	5131	10	8.409564			
100000256	5465	1	9.898288	BUSH RIVER RD	E	BUSH RIVER RD & ZIMALCREST DR
100000256	5465	2	12.097797			
100000256	5465	3	8.958316			
100000256	5465	4	9.759942			
100000256	5465	5	9.96836			
100000256	5465	6	11.209933			
100000256	5465	7	9.153779			
100000256	5465	8	9.552652			
100000256	5465	9	9.101983			
100000256	5465	10	10.005791			
100000256	5484	1	42.522092	ZIMALCREST DR	S	BUSH RIVER RD & ZIMALCREST DR
100000256	5484	2	48.674088			
100000256	5484	3	32.142575			
100000256	5484	4	46.5832			
100000256	5484	5	42.204543			
100000256	5484	6	29.852926			
100000256	5484	7	36.185824			
100000256	5484	8	42.895017			
100000256	5484	9	36.247607			
100000256	5484	10	29.966661			
100000256	5485	1	7.647691	ZIMALCREST DR	N	BUSH RIVER RD & ZIMALCREST DR
100000256	5485	2	8.121399			
100000256	5485	3	7.955613			
100000256	5485	4	8.49485			
100000256	5485	5	8.860086			
100000256	5485	6	8.929142			
100000256	5485	7	8.541223			
100000256	5485	8	11.336408			
100000256	5485	9	10.287793			
100000256	5485	10	9.439731			
100000259	5465	1	0	BUSH RIVER RD	W	NOTTINGWOOD DR & BUSH RIVER RD
100000259	5465	2	0			
100000259	5465	3	0			
100000259	5465	4	0			
100000259	5465	5	0			
100000259	5465	6	0			
100000259	5465	7	0			
100000259	5465	8	0			
100000259	5465	9	0			
100000259	5465	10	0			
100000259	5471	1	0	BUSH RIVER RD	E	NOTTINGWOOD DR & BUSH RIVER RD
100000259	5471	2	0			
100000259	5471	3	0			
100000259	5471	4	0			
100000259	5471	5	0			
100000259	5471	6	0			
100000259	5471	7	0			
100000259	5471	8	0			
100000259	5471	9	0			
100000259	5471	10	0			
100000259	5472	1		NOTTINGWOOD DR	S	NOTTINGWOOD DR & BUSH RIVER RD
100000259	5472	2				
100000259	5472	3				
100000259	5472	4				
100000259	5472	5				
100000259	5472	6				
100000259	5472	7				
100000259	5472	8				
100000259	5472	9				
100000259	5472	10				
100000262	5502	1	0.375501	BUSH RIVER RD	E	DUTCH SQUARE ENTRANCE, BUSH RIVER RD & COLONIAL LIFE BLVD W
100000262	5502	2	0.331991			
100000262	5502	3	0.527688			
100000262	5502	4	0.467661			
100000262	5502	5	0.448703			
100000262	5502	6	0.354243			
100000262	5502	7	0.681328			
100000262	5502	8	0.498364			
100000262	5502	9	0.773496			
100000262	5502	10	0.693563			
100000262	5506	1	30.130847	COLONIAL LIFE BLVD W	N	DUTCH SQUARE ENTRANCE, BUSH RIVER RD & COLONIAL LIFE BLVD W
100000262	5506	2	29.20165			

Node	Superlink	Run	Average Control Delay	Approach Street Name	Direction	Intersection
100000262	5506	3	29.797857			
100000262	5506	4	30.425965			
100000262	5506	5	33.975977			
100000262	5506	6	30.699784			
100000262	5506	7	29.681044			
100000262	5506	8	25.462343			
100000262	5506	9	29.558533			
100000262	5506	10	27.729691			
100000262	5509	1	61.999419	DUTCH SQUARE ENTRANCE	S	DUTCH SQUARE ENTRANCE, BUSH RIVER RD & COLONIAL LIFE BLVD W
100000262	5509	2	51.289812			
100000262	5509	3	54.016351			
100000262	5509	4	59.317507			
100000262	5509	5	64.189568			
100000262	5509	6	56.131378			
100000262	5509	7	63.551812			
100000262	5509	8	59.980727			
100000262	5509	9	62.965331			
100000262	5509	10	53.581231			
100000262	5511	1	14.828358	BUSH RIVER RD	W	DUTCH SQUARE ENTRANCE, BUSH RIVER RD & COLONIAL LIFE BLVD W
100000262	5511	2	17.288495			
100000262	5511	3	14.353614			
100000262	5511	4	14.01638			
100000262	5511	5	13.801942			
100000262	5511	6	15.969723			
100000262	5511	7	17.173015			
100000262	5511	8	15.805037			
100000262	5511	9	19.700724			
100000262	5511	10	13.690983			
100000263	5516	1	0.198417	COLONIAL LIFE BLVD W	N	COLONIAL LIFE BLVD W
100000263	5516	2	0.109842			
100000263	5516	3	0.208385			
100000263	5516	4	0.260727			
100000263	5516	5	0.185656			
100000263	5516	6	0.184355			
100000263	5516	7	0.219017			
100000263	5516	8	0.191453			
100000263	5516	9	0.23159			
100000263	5516	10	0.160702			
100000263	5520	1	9.547264	COLONIAL LIFE BLVD W	W	COLONIAL LIFE BLVD W
100000263	5520	2	8.308617			
100000263	5520	3	8.552273			
100000263	5520	4	8.426694			
100000263	5520	5	9.76616			
100000263	5520	6	11.011789			
100000263	5520	7	7.867745			
100000263	5520	8	10.85428			
100000263	5520	9	9.64186			
100000263	5520	10	9.753528			
100000263	6495	1	0.527442	COLONIAL LIFE BLVD W	S	COLONIAL LIFE BLVD W
100000263	6495	2	0.511728			
100000263	6495	3	0.53815			
100000263	6495	4	0.697493			
100000263	6495	5	0.43751			
100000263	6495	6	0.514361			
100000263	6495	7	0.485418			
100000263	6495	8	0.784065			
100000263	6495	9	0.487952			
100000263	6495	10	0.526035			
100000265	5139	1	13.222741	GREYSTONE BLVD	N	GREYSTONE BLVD & STONERIDGE DR
100000265	5139	2	15.638556			
100000265	5139	3	15.681393			
100000265	5139	4	14.555511			
100000265	5139	5	13.211485			
100000265	5139	6	15.258837			
100000265	5139	7	17.961757			
100000265	5139	8	15.813139			
100000265	5139	9	15.437358			
100000265	5139	10	13.662972			
100000265	5537	1	21.87067	STONERIDGE DR	W	GREYSTONE BLVD & STONERIDGE DR
100000265	5537	2	27.356981			
100000265	5537	3	27.607706			
100000265	5537	4	23.586167			
100000265	5537	5	22.379736			
100000265	5537	6	20.695053			
100000265	5537	7	21.900695			
100000265	5537	8	21.795972			
100000265	5537	9	22.884736			
100000265	5537	10	24.899567			
100000265	5556	1	12.637233	STONERIDGE DR	E	GREYSTONE BLVD & STONERIDGE DR
100000265	5556	2	11.8752			
100000265	5556	3	11.841879			
100000265	5556	4	12.538115			
100000265	5556	5	11.794688			
100000265	5556	6	12.772862			
100000265	5556	7	13.208545			
100000265	5556	8	12.428447			
100000265	5556	9	11.787016			
100000265	5556	10	13.250365			
100000265	6328	1	18.759846	GREYSTONE BLVD	S	GREYSTONE BLVD & STONERIDGE DR
100000265	6328	2	18.612607			
100000265	6328	3	17.548806			
100000265	6328	4	16.449166			
100000265	6328	5	17.888624			
100000265	6328	6	18.771565			
100000265	6328	7	18.996343			
100000265	6328	8	17.819754			
100000265	6328	9	17.347964			
100000265	6328	10	16.972153			
100000266	5545	1	58.212619	GREYSTONE BLVD	N	GREYSTONE BLVD & BROAD RIVER RD
100000266	5545	2	63.387314			
100000266	5545	3	56.603726			
100000266	5545	4	55.89241			
100000266	5545	5	60.942453			
100000266	5545	6	60.699179			
100000266	5545	7	58.514763			
100000266	5545	8	57.937149			
100000266	5545	9	54.365979			
100000266	5545	10	60.313938			
100000266	6325	1	4.774964	BROAD RIVER RD	W	GREYSTONE BLVD & BROAD RIVER RD
100000266	6325	2	4.8721			
100000266	6325	3	4.461473			
100000266	6325	4	4.382299			

Node	Superlink	Run	Average Control Delay	Approach Street Name	Direction	Intersection
100000266	6325	5	5.657933			
100000266	6325	6	5.74663			
100000266	6325	7	5.520983			
100000266	6325	8	4.919937			
100000266	6325	9	4.092641			
100000266	6325	10	5.442967			
100000266	6327	1	6.497072	BROAD RIVER RD	E	GREYSTONE BLVD & BROAD RIVER RD
100000266	6327	2	7.598829			
100000266	6327	3	7.284528			
100000266	6327	4	6.225618			
100000266	6327	5	7.552106			
100000266	6327	6	6.821094			
100000266	6327	7	7.009617			
100000266	6327	8	7.237833			
100000266	6327	9	6.73227			
100000266	6327	10	7.327579			
100000268	5565	1	31.4957	HUGER ST	N	HUGER ST & LAUREL ST
100000268	5565	2	33.118311			
100000268	5565	3	33.326985			
100000268	5565	4	33.028657			
100000268	5565	5	34.08627			
100000268	5565	6	32.764008			
100000268	5565	7	31.723812			
100000268	5565	8	32.397535			
100000268	5565	9	31.720651			
100000268	5565	10	31.62394			
100000268	5570	1	29.537968	LAUREL ST	E	HUGER ST & LAUREL ST
100000268	5570	2	30.495204			
100000268	5570	3	30.455322			
100000268	5570	4	29.978184			
100000268	5570	5	30.001913			
100000268	5570	6	30.048586			
100000268	5570	7	31.657348			
100000268	5570	8	29.848895			
100000268	5570	9	29.595698			
100000268	5570	10	30.103447			
100000268	5571	1	22.396083	HUGER ST	S	HUGER ST & LAUREL ST
100000268	5571	2	22.742829			
100000268	5571	3	24.543435			
100000268	5571	4	24.178943			
100000268	5571	5	21.89541			
100000268	5571	6	22.913783			
100000268	5571	7	22.081107			
100000268	5571	8	22.569458			
100000268	5571	9	22.749154			
100000268	5571	10	22.752699			
100000268	5581	1	48.330619	LAUREL ST	W	HUGER ST & LAUREL ST
100000268	5581	2	50.051139			
100000268	5581	3	49.699977			
100000268	5581	4	48.538536			
100000268	5581	5	48.021869			
100000268	5581	6	48.095815			
100000268	5581	7	47.166331			
100000268	5581	8	50.011748			
100000268	5581	9	49.223581			
100000268	5581	10	49.915964			
100000339	6083	1	19.049925	BROAD RIVER RD	NW	BROAD RIVER RD & ST ANDREWS RD
100000339	6083	2	14.713915			
100000339	6083	3	17.559364			
100000339	6083	4	20.201253			
100000339	6083	5	18.780892			
100000339	6083	6	17.241722			
100000339	6083	7	18.480545			
100000339	6083	8	15.351561			
100000339	6083	9	20.47823			
100000339	6083	10	17.675598			
100000339	6084	1	21.671376	BROAD RIVER RD	SE	BROAD RIVER RD & ST ANDREWS RD
100000339	6084	2	23.051809			
100000339	6084	3	26.118757			
100000339	6084	4	23.758055			
100000339	6084	5	25.407368			
100000339	6084	6	28.314565			
100000339	6084	7	26.638735			
100000339	6084	8	24.906641			
100000339	6084	9	23.079888			
100000339	6084	10	22.872075			
100000339	6085	1	67.024914	ST ANDREWS RD	SW	BROAD RIVER RD & ST ANDREWS RD
100000339	6085	2	57.36834			
100000339	6085	3	60.214942			
100000339	6085	4	66.751283			
100000339	6085	5	62.574012			
100000339	6085	6	66.817738			
100000339	6085	7	67.877161			
100000339	6085	8	57.524543			
100000339	6085	9	54.886272			
100000339	6085	10	65.140565			
100000339	6086	1	38.376009	ST ANDREWS RD	E	BROAD RIVER RD & ST ANDREWS RD
100000339	6086	2	35.677784			
100000339	6086	3	39.843545			
100000339	6086	4	36.610021			
100000339	6086	5	36.723126			
100000339	6086	6	39.587287			
100000339	6086	7	35.849824			
100000339	6086	8	39.067383			
100000339	6086	9	45.536733			
100000339	6086	10	36.43627			
100000343	6059	1	0.011273	BROAD RIVER RD	NW	NUNAMAKER DR & BROAD RIVER RD
100000343	6059	2	0.003108			
100000343	6059	3	0.006805			
100000343	6059	4	0.036381			
100000343	6059	5	0.025137			
100000343	6059	6	0.001037			
100000343	6059	7	0.003093			
100000343	6059	8	0.000603			
100000343	6059	9	0.002631			
100000343	6059	10	0.002805			
100000343	6063	1		NUNAMAKER DR	SW	NUNAMAKER DR & BROAD RIVER RD
100000343	6063	2				
100000343	6063	3				
100000343	6063	4				
100000343	6063	5				
100000343	6063	6				

Node	Superlink	Run	Average Control Delay	Approach Street Name	Direction	Intersection
100000343	6063	7				
100000343	6063	8				
100000343	6063	9				
100000343	6063	10				
100000343	6065	1	0.020427	BROAD RIVER RD	SE	NUNAMAKER DR & BROAD RIVER RD
100000343	6065	2	0.0151			
100000343	6065	3	0.007179			
100000343	6065	4	0.01122			
100000343	6065	5	0.005365			
100000343	6065	6	0.001916			
100000343	6065	7	0.015215			
100000343	6065	8	0.005449			
100000343	6065	9	0.005206			
100000343	6065	10	0.007948			
100000344	6065	1	2.211898	BROAD RIVER RD	NW	YOUNG DR, BROAD RIVER RD & SEMINOLE RD
100000344	6065	2	2.252806			
100000344	6065	3	2.210078			
100000344	6065	4	3.240427			
100000344	6065	5	2.813235			
100000344	6065	6	2.611915			
100000344	6065	7	3.225485			
100000344	6065	8	2.68475			
100000344	6065	9	2.722332			
100000344	6065	10	2.530672			
100000344	6066	1	13.807297	BROAD RIVER RD	SE	YOUNG DR, BROAD RIVER RD & SEMINOLE RD
100000344	6066	2	16.116108			
100000344	6066	3	15.790653			
100000344	6066	4	15.573744			
100000344	6066	5	15.742156			
100000344	6066	6	16.518927			
100000344	6066	7	19.519538			
100000344	6066	8	18.811328			
100000344	6066	9	14.288244			
100000344	6066	10	14.94907			
100000344	6067	1	51.32163	YOUNG DR	SW	YOUNG DR, BROAD RIVER RD & SEMINOLE RD
100000344	6067	2	49.028517			
100000344	6067	3	48.303018			
100000344	6067	4	56.465512			
100000344	6067	5	50.338551			
100000344	6067	6	53.166537			
100000344	6067	7	66.060908			
100000344	6067	8	50.302937			
100000344	6067	9	50.871527			
100000344	6067	10	60.152592			
100000344	6068	1	25.246262	SEMINOLE RD	NE	YOUNG DR, BROAD RIVER RD & SEMINOLE RD
100000344	6068	2	25.927196			
100000344	6068	3	31.759468			
100000344	6068	4	30.919251			
100000344	6068	5	29.093522			
100000344	6068	6	28.607961			
100000344	6068	7	23.112072			
100000344	6068	8	33.646467			
100000344	6068	9	19.609515			
100000344	6068	10	25.500077			
100000348	5116	1	6.300665	ST ANDREWS RD	NW	ST ANDREWS RD & JAMIL RD
100000348	5116	2	5.296664			
100000348	5116	3	4.873943			
100000348	5116	4	5.217941			
100000348	5116	5	4.99649			
100000348	5116	6	5.314861			
100000348	5116	7	4.47396			
100000348	5116	8	5.470222			
100000348	5116	9	4.797861			
100000348	5116	10	5.782387			
100000348	6114	1	7.240919	ST ANDREWS RD	E	ST ANDREWS RD & JAMIL RD
100000348	6114	2	8.795765			
100000348	6114	3	5.247028			
100000348	6114	4	5.530459			
100000348	6114	5	6.700948			
100000348	6114	6	7.626815			
100000348	6114	7	7.170251			
100000348	6114	8	7.166957			
100000348	6114	9	5.025324			
100000348	6114	10	6.375402			
100000348	6119	1	65.996241	JAMIL RD	S	ST ANDREWS RD & JAMIL RD
100000348	6119	2	68.672364			
100000348	6119	3	71.341009			
100000348	6119	4	67.750047			
100000348	6119	5	71.947829			
100000348	6119	6	66.594517			
100000348	6119	7	64.925735			
100000348	6119	8	66.311633			
100000348	6119	9	68.066203			
100000348	6119	10	65.27735			
100000349	6066	1	3.689311	BROAD RIVER RD	NW	ST ANDREWS PKY & BROAD RIVER RD
100000349	6066	2	2.708221			
100000349	6066	3	2.086735			
100000349	6066	4	2.138718			
100000349	6066	5	2.457306			
100000349	6066	6	3.706132			
100000349	6066	7	3.242016			
100000349	6066	8	2.129857			
100000349	6066	9	2.219346			
100000349	6066	10	2.593362			
100000349	6078	1	43.047983	ST ANDREWS PKY	SW	ST ANDREWS PKY & BROAD RIVER RD
100000349	6078	2	52.730333			
100000349	6078	3	57.298625			
100000349	6078	4	49.912694			
100000349	6078	5	48.512508			
100000349	6078	6	51.282309			
100000349	6078	7	48.247198			
100000349	6078	8	55.525662			
100000349	6078	9	56.443984			
100000349	6078	10	53.050856			
100000349	6079	1		BROAD RIVER RD	NE	ST ANDREWS PKY & BROAD RIVER RD
100000349	6079	2				
100000349	6079	3				
100000349	6079	4				
100000349	6079	5				
100000349	6079	6				
100000349	6079	7				
100000349	6079	8				

Node	Superlink	Run	Average Control Delay	Approach Street Name	Direction	Intersection
100000349	6079	9				
100000349	6079	10				
100000349	6083	1	3.249971	BROAD RIVER RD	SE	ST ANDREWS PKY & BROAD RIVER RD
100000349	6083	2	4.445515			
100000349	6083	3	3.622733			
100000349	6083	4	2.198329			
100000349	6083	5	3.782522			
100000349	6083	6	3.493529			
100000349	6083	7	3.476969			
100000349	6083	8	3.590289			
100000349	6083	9	3.079046			
100000349	6083	10	3.463053			
100000353	5104	1	24.735192	PINEY GROVE RD	W	BOWER PKY, PINEY GROVE RD & JAMIL RD
100000353	5104	2	22.144058			
100000353	5104	3	26.378829			
100000353	5104	4	25.600155			
100000353	5104	5	25.943678			
100000353	5104	6	21.269442			
100000353	5104	7	23.320679			
100000353	5104	8	20.224991			
100000353	5104	9	27.368623			
100000353	5104	10	25.39386			
100000353	6125	1	26.164118	BOWER PKY	SE	BOWER PKY, PINEY GROVE RD & JAMIL RD
100000353	6125	2	28.82459			
100000353	6125	3	29.180145			
100000353	6125	4	28.352094			
100000353	6125	5	28.110102			
100000353	6125	6	25.644257			
100000353	6125	7	25.595071			
100000353	6125	8	29.053671			
100000353	6125	9	25.462962			
100000353	6125	10	23.786581			
100000353	6126	1	23.160638	PINEY GROVE RD	E	BOWER PKY, PINEY GROVE RD & JAMIL RD
100000353	6126	2	20.542401			
100000353	6126	3	21.146938			
100000353	6126	4	24.234483			
100000353	6126	5	22.471457			
100000353	6126	6	19.271163			
100000353	6126	7	20.930356			
100000353	6126	8	21.151101			
100000353	6126	9	23.224877			
100000353	6126	10	22.12422			
100000353	6127	1	49.210797	JAMIL RD	NW	BOWER PKY, PINEY GROVE RD & JAMIL RD
100000353	6127	2	35.476484			
100000353	6127	3	42.791598			
100000353	6127	4	43.642601			
100000353	6127	5	49.776653			
100000353	6127	6	33.060019			
100000353	6127	7	39.93723			
100000353	6127	8	44.273966			
100000353	6127	9	37.986312			
100000353	6127	10	47.488733			
100000354	6095	1	15.854454	ST ANDREWS RD	SW	ST ANDREWS RD, KAY ST & CHARTWELL RD
100000354	6095	2	11.556523			
100000354	6095	3	13.508657			
100000354	6095	4	16.098161			
100000354	6095	5	12.414101			
100000354	6095	6	14.224604			
100000354	6095	7	13.436862			
100000354	6095	8	13.598698			
100000354	6095	9	13.395713			
100000354	6095	10	12.84723			
100000354	6096	1	8.398002	ST ANDREWS RD	NE	ST ANDREWS RD, KAY ST & CHARTWELL RD
100000354	6096	2	6.310259			
100000354	6096	3	7.484709			
100000354	6096	4	8.594886			
100000354	6096	5	6.559843			
100000354	6096	6	6.243286			
100000354	6096	7	7.748129			
100000354	6096	8	6.959372			
100000354	6096	9	6.534849			
100000354	6096	10	8.015212			
100000354	6098	1	121.864529	CHARTWELL RD	NW	ST ANDREWS RD, KAY ST & CHARTWELL RD
100000354	6098	2	122.407518			
100000354	6098	3	84.391559			
100000354	6098	4	173.852618			
100000354	6098	5	79.865363			
100000354	6098	6	80.01547			
100000354	6098	7	88.037596			
100000354	6098	8	121.083858			
100000354	6098	9	59.966936			
100000354	6098	10	82.574933			
100000354	6099	1	25.432902	KAY ST	SE	ST ANDREWS RD, KAY ST & CHARTWELL RD
100000354	6099	2	25.030309			
100000354	6099	3	28.473755			
100000354	6099	4	47.906812			
100000354	6099	5	28.196914			
100000354	6099	6	25.416597			
100000354	6099	7	23.828767			
100000354	6099	8	23.68804			
100000354	6099	9	23.050658			
100000354	6099	10	28.906058			
100000356	6086	1	0.137876	ST ANDREWS RD	SW	LAWRENCE ST & ST ANDREWS RD
100000356	6086	2	0.149043			
100000356	6086	3	0.135508			
100000356	6086	4	0.15194			
100000356	6086	5	0.167446			
100000356	6086	6	0.159392			
100000356	6086	7	0.164409			
100000356	6086	8	0.140113			
100000356	6086	9	0.117377			
100000356	6086	10	0.102345			
100000356	6092	1	8.231196	LAWRENCE ST	SE	LAWRENCE ST & ST ANDREWS RD
100000356	6092	2	9.043185			
100000356	6092	3	9.875449			
100000356	6092	4	9.798087			
100000356	6092	5	7.409687			
100000356	6092	6	8.471139			
100000356	6092	7	8.372579			
100000356	6092	8	8.964061			
100000356	6092	9	9.166158			
100000356	6092	10	10.176478			

Node	Superlink	Run	Average Control Delay	Approach Street Name	Direction	Intersection
100000356	6094	1	0.696143	ST ANDREWS RD	NE	LAWRENCE ST & ST ANDREWS RD
100000356	6094	2	0.744316			
100000356	6094	3	0.722323			
100000356	6094	4	0.693203			
100000356	6094	5	0.50231			
100000356	6094	6	0.850922			
100000356	6094	7	0.66002			
100000356	6094	8	0.929256			
100000356	6094	9	0.54678			
100000356	6094	10	0.600892			
100000357	6119	1	0.808857	JAMIL RD	NW	JAMIL RD & PAISLEY LN
100000357	6119	2	0.996149			
100000357	6119	3	0.947905			
100000357	6119	4	0.83869			
100000357	6119	5	0.756404			
100000357	6119	6	0.67813			
100000357	6119	7	1.113049			
100000357	6119	8	0.95568			
100000357	6119	9	0.743304			
100000357	6119	10	0.864856			
100000357	6120	1	11.968952	PAISLEY LN	NE	JAMIL RD & PAISLEY LN
100000357	6120	2	10.41085			
100000357	6120	3	13.566336			
100000357	6120	4	12.230411			
100000357	6120	5	11.787482			
100000357	6120	6	14.075473			
100000357	6120	7	11.384654			
100000357	6120	8	10.588802			
100000357	6120	9	11.627002			
100000357	6120	10	13.51685			
100000357	6121	1	1.471576	JAMIL RD	SE	JAMIL RD & PAISLEY LN
100000357	6121	2	0.992849			
100000357	6121	3	0.63753			
100000357	6121	4	0.821354			
100000357	6121	5	1.055835			
100000357	6121	6	0.971557			
100000357	6121	7	1.603569			
100000357	6121	8	0.810536			
100000357	6121	9	1.36214			
100000357	6121	10	0.770708			
100000358	5117	1	9.856361	ST ANDREWS RD	NE	ST ANDREWS RD, FERNANDINA RD & BURNING TREE RD
100000358	5117	2	9.984019			
100000358	5117	3	10.848208			
100000358	5117	4	9.990055			
100000358	5117	5	9.180519			
100000358	5117	6	9.571302			
100000358	5117	7	9.509434			
100000358	5117	8	9.635226			
100000358	5117	9	10.571444			
100000358	5117	10	10.711536			
100000358	6100	1	12.242019	ST ANDREWS RD	SW	ST ANDREWS RD, FERNANDINA RD & BURNING TREE RD
100000358	6100	2	11.378539			
100000358	6100	3	13.579093			
100000358	6100	4	12.856397			
100000358	6100	5	12.023192			
100000358	6100	6	11.340524			
100000358	6100	7	11.764052			
100000358	6100	8	12.227238			
100000358	6100	9	12.060514			
100000358	6100	10	11.4058			
100000358	6101	1	29.542819	BURNING TREE RD	NW	ST ANDREWS RD, FERNANDINA RD & BURNING TREE RD
100000358	6101	2	28.299276			
100000358	6101	3	25.764319			
100000358	6101	4	33.208715			
100000358	6101	5	31.541514			
100000358	6101	6	29.129322			
100000358	6101	7	27.000907			
100000358	6101	8	31.943702			
100000358	6101	9	27.893972			
100000358	6101	10	33.009618			
100000358	6102	1	24.588191	FERNANDINA RD	SE	ST ANDREWS RD, FERNANDINA RD & BURNING TREE RD
100000358	6102	2	21.549179			
100000358	6102	3	21.813075			
100000358	6102	4	22.874546			
100000358	6102	5	21.688666			
100000358	6102	6	22.789908			
100000358	6102	7	21.238273			
100000358	6102	8	22.111494			
100000358	6102	9	21.515799			
100000358	6102	10	21.769742			
100000360	3294	1	11.771776	EXIT 106 WB OFF RAMP	NE	EXIT 106 WB OFF RAMP & BURNING TREE RD
100000360	3294	2	11.353456			
100000360	3294	3	12.230579			
100000360	3294	4	10.661842			
100000360	3294	5	10.640358			
100000360	3294	6	13.355582			
100000360	3294	7	10.663067			
100000360	3294	8	10.973642			
100000360	3294	9	10.609475			
100000360	3294	10	10.214617			
100000360	6101	1	0.078347	BURNING TREE RD	S	EXIT 106 WB OFF RAMP & BURNING TREE RD
100000360	6101	2	0.048735			
100000360	6101	3	0.089855			
100000360	6101	4	0.027194			
100000360	6101	5	0.049328			
100000360	6101	6	0.043103			
100000360	6101	7	0.050601			
100000360	6101	8	0.061361			
100000360	6101	9	0.060705			
100000360	6101	10	0.037286			
100000360	6105	1	0.03881	BURNING TREE RD	N	EXIT 106 WB OFF RAMP & BURNING TREE RD
100000360	6105	2	0.017907			
100000360	6105	3	0.020475			
100000360	6105	4	0.022219			
100000360	6105	5	0.034234			
100000360	6105	6	0.020829			
100000360	6105	7	0.022286			
100000360	6105	8	0.02731			
100000360	6105	9	0.022353			
100000360	6105	10	0.027239			
100000362	6134	1	10.522659	JAMIL RD	NW	HARBISON BLVD & JAMIL RD
100000362	6134	2	19.216967			

Node	Superlink	Run	Average Control Delay	Approach Street Name	Direction	Intersection
100000362	6134	3	11.514222			
100000362	6134	4	11.585127			
100000362	6134	5	10.518956			
100000362	6134	6	8.620709			
100000362	6134	7	14.02197			
100000362	6134	8	12.17664			
100000362	6134	9	7.77461			
100000362	6134	10	10.723394			
100000362	6137	1	0.847889	HARBISON BLVD	NE	HARBISON BLVD & JAMIL RD
100000362	6137	2	0.919796			
100000362	6137	3	0.430715			
100000362	6137	4	0.830909			
100000362	6137	5	0.648699			
100000362	6137	6	0.55287			
100000362	6137	7	0.873865			
100000362	6137	8	0.592409			
100000362	6137	9	0.691362			
100000362	6137	10	0.859429			
100000362	6473	1	0.000877	HARBISON BLVD	SW	HARBISON BLVD & JAMIL RD
100000362	6473	2	0.00272			
100000362	6473	3	0.002452			
100000362	6473	4	0.002753			
100000362	6473	5	0.001882			
100000362	6473	6	0.00265			
100000362	6473	7	0.003022			
100000362	6473	8	0.001963			
100000362	6473	9	0.015804			
100000362	6473	10	0.001959			
100000363	6125	1	0.301419	BOWER PKY	NW	BOWER PKY & JAMIL RD
100000363	6125	2	0.319532			
100000363	6125	3	0.43936			
100000363	6125	4	0.460994			
100000363	6125	5	0.346036			
100000363	6125	6	0.263616			
100000363	6125	7	0.161795			
100000363	6125	8	0.230817			
100000363	6125	9	0.232842			
100000363	6125	10	0.114146			
100000363	6134	1	11.043962	JAMIL RD	SW	BOWER PKY & JAMIL RD
100000363	6134	2	11.491612			
100000363	6134	3	10.346736			
100000363	6134	4	10.283738			
100000363	6134	5	10.185982			
100000363	6134	6	10.971718			
100000363	6134	7	10.878151			
100000363	6134	8	9.606352			
100000363	6134	9	9.779898			
100000363	6134	10	10.555			
100000363	6160	1	0.515503	BOWER PKY	SE	BOWER PKY & JAMIL RD
100000363	6160	2	0.456325			
100000363	6160	3	0.52606			
100000363	6160	4	0.481809			
100000363	6160	5	0.500836			
100000363	6160	6	0.50258			
100000363	6160	7	0.380803			
100000363	6160	8	0.313673			
100000363	6160	9	0.474308			
100000363	6160	10	0.416184			
100000364	6145	1	1.815159	HARBISON BLVD	SW	HARBISON BLVD & COLUMBIANA DR
100000364	6145	2	2.328862			
100000364	6145	3	2.5601			
100000364	6145	4	2.763028			
100000364	6145	5	2.394682			
100000364	6145	6	2.329234			
100000364	6145	7	2.266334			
100000364	6145	8	2.693228			
100000364	6145	9	2.176646			
100000364	6145	10	2.351868			
100000364	6176	1	2.517313	HARBISON BLVD	NE	HARBISON BLVD & COLUMBIANA DR
100000364	6176	2	2.628444			
100000364	6176	3	3.160182			
100000364	6176	4	2.762445			
100000364	6176	5	2.749689			
100000364	6176	6	2.874268			
100000364	6176	7	3.571657			
100000364	6176	8	3.24982			
100000364	6176	9	2.744256			
100000364	6176	10	3.163764			
100000364	6177	1		COLUMBIANA DR	NW	HARBISON BLVD & COLUMBIANA DR
100000364	6177	2				
100000364	6177	3				
100000364	6177	4				
100000364	6177	5				
100000364	6177	6				
100000364	6177	7				
100000364	6177	8				
100000364	6177	9				
100000364	6177	10				
100000364	6196	1	47.901805	COLUMBIANA DR	SE	HARBISON BLVD & COLUMBIANA DR
100000364	6196	2	46.027609			
100000364	6196	3	47.856956			
100000364	6196	4	47.647959			
100000364	6196	5	44.556277			
100000364	6196	6	49.109841			
100000364	6196	7	49.652868			
100000364	6196	8	48.343832			
100000364	6196	9	48.37565			
100000364	6196	10	48.263223			
100000365	6137	1	5.543229	HARBISON BLVD	SW	COLUMBIANA CIR, HARBISON BLVD & PARK TERRACE DR
100000365	6137	2	5.669849			
100000365	6137	3	5.500191			
100000365	6137	4	5.47062			
100000365	6137	5	5.781438			
100000365	6137	6	6.50284			
100000365	6137	7	7.34985			
100000365	6137	8	7.325713			
100000365	6137	9	6.92057			
100000365	6137	10	6.894558			
100000365	6140	1	17.395807	COLUMBIANA CIR	SE	COLUMBIANA CIR, HARBISON BLVD & PARK TERRACE DR
100000365	6140	2	19.655409			
100000365	6140	3	11.903281			
100000365	6140	4	21.156147			

Node	Superlink	Run	Average Control Delay	Approach Street Name	Direction	Intersection
100000365	6140	5	19.689397			
100000365	6140	6	21.402871			
100000365	6140	7	17.397971			
100000365	6140	8	15.593433			
100000365	6140	9	17.443293			
100000365	6140	10	15.082014			
100000365	6145	1	8.849181	HARBISON BLVD	NE	COLUMBIANA CIR, HARBISON BLVD & PARK TERRACE DR
100000365	6145	2	9.003203			
100000365	6145	3	8.411214			
100000365	6145	4	10.294088			
100000365	6145	5	10.301877			
100000365	6145	6	9.982251			
100000365	6145	7	11.875079			
100000365	6145	8	9.98206			
100000365	6145	9	10.15039			
100000365	6145	10	10.372966			
100000365	6151	1	25.537491	PARK TERRACE DR	NW	COLUMBIANA CIR, HARBISON BLVD & PARK TERRACE DR
100000365	6151	2	27.8872			
100000365	6151	3	22.908835			
100000365	6151	4	26.918986			
100000365	6151	5	24.876793			
100000365	6151	6	29.623739			
100000365	6151	7	22.798973			
100000365	6151	8	28.433851			
100000365	6151	9	29.042951			
100000365	6151	10	30.284836			
100000374	6151	1	32.701975	PARK TERRACE DR	S	BOWER PKY, PARK TERRACE DR & 6161 (S)
100000374	6151	2	31.473351			
100000374	6151	3	36.407528			
100000374	6151	4	36.471245			
100000374	6151	5	35.850878			
100000374	6151	6	32.498619			
100000374	6151	7	34.983172			
100000374	6151	8	35.289999			
100000374	6151	9	41.787782			
100000374	6151	10	30.126371			
100000374	6160	1	8.872327	BOWER PKY	W	BOWER PKY, PARK TERRACE DR & 6161 (S)
100000374	6160	2	7.634407			
100000374	6160	3	9.276104			
100000374	6160	4	7.29809			
100000374	6160	5	6.710586			
100000374	6160	6	5.929249			
100000374	6160	7	8.229121			
100000374	6160	8	6.075192			
100000374	6160	9	7.292201			
100000374	6160	10	5.972022			
100000374	6161	1	3.804685		N	BOWER PKY, PARK TERRACE DR & 6161 (S)
100000374	6161	2	3.781892			
100000374	6161	3	4.205575			
100000374	6161	4	3.935545			
100000374	6161	5	4.071905			
100000374	6161	6	3.9445			
100000374	6161	7	4.353522			
100000374	6161	8	4.100378			
100000374	6161	9	3.989269			
100000374	6161	10	3.986923			
100000374	6162	1		BOWER PKY	E	BOWER PKY, PARK TERRACE DR & 6161 (S)
100000374	6162	2				
100000374	6162	3				
100000374	6162	4				
100000374	6162	5				
100000374	6162	6				
100000374	6162	7				
100000374	6162	8				
100000374	6162	9				
100000374	6162	10				
100000375	6196	1	1.232245	COLUMBIANA DR	NW	COLUMBIANA DR, CROSSBOW DR & DRIVEWAY
100000375	6196	2	1.873128			
100000375	6196	3	2.401053			
100000375	6196	4	1.770858			
100000375	6196	5	2.691336			
100000375	6196	6	2.28135			
100000375	6196	7	1.034043			
100000375	6196	8	2.269807			
100000375	6196	9	2.891859			
100000375	6196	10	2.487508			
100000375	6204	1	2.447464	COLUMBIANA DR	SE	COLUMBIANA DR, CROSSBOW DR & DRIVEWAY
100000375	6204	2	2.421529			
100000375	6204	3	2.667277			
100000375	6204	4	2.132527			
100000375	6204	5	2.569792			
100000375	6204	6	2.339024			
100000375	6204	7	2.232103			
100000375	6204	8	1.70929			
100000375	6204	9	1.980985			
100000375	6204	10	2.66061			
100000375	6550	1	9.189493	CROSSBOW DR	NE	COLUMBIANA DR, CROSSBOW DR & DRIVEWAY
100000375	6550	2	9.821291			
100000375	6550	3	15.331876			
100000375	6550	4	13.373304			
100000375	6550	5	8.533775			
100000375	6550	6	6.483385			
100000375	6550	7	16.936274			
100000375	6550	8	11.459084			
100000375	6550	9	11.956767			
100000375	6550	10	13.951281			
100000375	6551	1	9.724709	DRIVEWAY	SW	COLUMBIANA DR, CROSSBOW DR & DRIVEWAY
100000375	6551	2	8.651478			
100000375	6551	3	10.338503			
100000375	6551	4	12.484211			
100000375	6551	5	13.845851			
100000375	6551	6	10.798106			
100000375	6551	7	14.394942			
100000375	6551	8	14.584514			
100000375	6551	9	8.615347			
100000375	6551	10	13.111133			
100000391	5071	1	4.155478	BROAD RIVER RD	NW	BROAD RIVER RD & COLUMBIANA DR
100000391	5071	2	3.941357			
100000391	5071	3	2.866353			
100000391	5071	4	3.544821			
100000391	5071	5	3.151783			
100000391	5071	6	3.652109			

Node	Superlink	Run	Average Control Delay	Approach Street Name	Direction	Intersection
100000391	5071	7	2.807328			
100000391	5071	8	3.45913			
100000391	5071	9	3.362407			
100000391	5071	10	3.481905			
100000391	6214	1	45.367045	COLUMBIANA DR	NE	BROAD RIVER RD & COLUMBIANA DR
100000391	6214	2	40.310634			
100000391	6214	3	48.956801			
100000391	6214	4	55.761964			
100000391	6214	5	43.716985			
100000391	6214	6	46.571323			
100000391	6214	7	42.668993			
100000391	6214	8	55.307053			
100000391	6214	9	48.084386			
100000391	6214	10	48.534074			
100000391	6224	1	11.677695	BROAD RIVER RD	SE	BROAD RIVER RD & COLUMBIANA DR
100000391	6224	2	10.078238			
100000391	6224	3	7.956516			
100000391	6224	4	10.067605			
100000391	6224	5	10.189401			
100000391	6224	6	10.526165			
100000391	6224	7	8.131515			
100000391	6224	8	10.080035			
100000391	6224	9	9.239288			
100000391	6224	10	8.688243			
100000392	6121	1	0.793851	JAMIL RD	NW	TRAM RD & JAMIL RD
100000392	6121	2	0.59121			
100000392	6121	3	0.394834			
100000392	6121	4	0.807159			
100000392	6121	5	0.38662			
100000392	6121	6	0.688875			
100000392	6121	7	0.662581			
100000392	6121	8	1.149858			
100000392	6121	9	2.776806			
100000392	6121	10	0.560386			
100000392	6127	1	0.290381	JAMIL RD	SE	TRAM RD & JAMIL RD
100000392	6127	2	0.166666			
100000392	6127	3	0.052684			
100000392	6127	4	0.15419			
100000392	6127	5	0.155079			
100000392	6127	6	0.350868			
100000392	6127	7	0.068396			
100000392	6127	8	0.21307			
100000392	6127	9	0.220599			
100000392	6127	10	0.394533			
100000392	6261	1	7.108564	TRAM RD	NE	TRAM RD & JAMIL RD
100000392	6261	2	7.668901			
100000392	6261	3	7.286121			
100000392	6261	4	7.421667			
100000392	6261	5	7.147912			
100000392	6261	6	7.772962			
100000392	6261	7	7.146305			
100000392	6261	8	7.6124			
100000392	6261	9	7.615859			
100000392	6261	10	7.433709			
100000394	6204	1	0	COLUMBIANA DR	NW	COLUMBIANA DR, COLUMBIA AVE & DRIVEWAY
100000394	6204	2	0			
100000394	6204	3	0			
100000394	6204	4	0			
100000394	6204	5	0			
100000394	6204	6	0			
100000394	6204	7	0			
100000394	6204	8	0			
100000394	6204	9	0			
100000394	6204	10	0			
100000394	6208	1	0	COLUMBIANA DR	SE	COLUMBIANA DR, COLUMBIA AVE & DRIVEWAY
100000394	6208	2	0			
100000394	6208	3	0			
100000394	6208	4	0			
100000394	6208	5	0			
100000394	6208	6	0			
100000394	6208	7	0			
100000394	6208	8	0			
100000394	6208	9	0			
100000394	6208	10	0			
100000394	6210	1		COLUMBIA AVE	NE	COLUMBIANA DR, COLUMBIA AVE & DRIVEWAY
100000394	6210	2				
100000394	6210	3				
100000394	6210	4				
100000394	6210	5				
100000394	6210	6				
100000394	6210	7				
100000394	6210	8				
100000394	6210	9				
100000394	6210	10				
100000394	6549	1		DRIVEWAY	SW	COLUMBIANA DR, COLUMBIA AVE & DRIVEWAY
100000394	6549	2				
100000394	6549	3				
100000394	6549	4				
100000394	6549	5				
100000394	6549	6				
100000394	6549	7				
100000394	6549	8				
100000394	6549	9				
100000394	6549	10				
100000395	5084	1	31.259775	LAKE MURRAY BLVD	W	LAKE MURRAY BLVD & COLUMBIANA DR
100000395	5084	2	34.688696			
100000395	5084	3	40.484405			
100000395	5084	4	33.577385			
100000395	5084	5	34.239681			
100000395	5084	6	64.34021			
100000395	5084	7	32.864627			
100000395	5084	8	61.109689			
100000395	5084	9	68.512842			
100000395	5084	10	63.564926			
100000395	6208	1	38.436377	COLUMBIANA DR	NW	LAKE MURRAY BLVD & COLUMBIANA DR
100000395	6208	2	35.225666			
100000395	6208	3	42.52561			
100000395	6208	4	42.369707			
100000395	6208	5	39.705118			
100000395	6208	6	34.779124			
100000395	6208	7	42.12476			
100000395	6208	8	38.417751			

Node	Superlink	Run	Average Control Delay	Approach Street Name	Direction	Intersection
100000395	6208	9	37.060482			
100000395	6208	10	39.421006			
100000395	6214	1	49.385555	COLUMBIANA DR	S	LAKE MURRAY BLVD & COLUMBIANA DR
100000395	6214	2	58.440319			
100000395	6214	3	27.401218			
100000395	6214	4	35.146809			
100000395	6214	5	39.143186			
100000395	6214	6	33.853068			
100000395	6214	7	31.239109			
100000395	6214	8	28.41374			
100000395	6214	9	25.377523			
100000395	6214	10	11.558799			
100000395	6215	1	22.634975	LAKE MURRAY BLVD	E	LAKE MURRAY BLVD & COLUMBIANA DR
100000395	6215	2	19.467008			
100000395	6215	3	23.666287			
100000395	6215	4	25.205826			
100000395	6215	5	22.646566			
100000395	6215	6	21.6855			
100000395	6215	7	20.711326			
100000395	6215	8	27.684067			
100000395	6215	9	21.280871			
100000395	6215	10	23.183237			
100000398	5101	1	0	HARBISON BLVD	W	HARBISON BLVD & PARKRIDGE DR
100000398	5101	2	0.067009			
100000398	5101	3	0			
100000398	5101	4	0.004669			
100000398	5101	5	0.002339			
100000398	5101	6	0.005009			
100000398	5101	7	0			
100000398	5101	8	0.002584			
100000398	5101	9	0.064414			
100000398	5101	10	0			
100000398	6267	1	9.135289	PARKRIDGE DR	SE	HARBISON BLVD & PARKRIDGE DR
100000398	6267	2	9.449934			
100000398	6267	3	8.585055			
100000398	6267	4	9.027575			
100000398	6267	5	8.361757			
100000398	6267	6	9.200737			
100000398	6267	7	8.603411			
100000398	6267	8	8.357962			
100000398	6267	9	8.886228			
100000398	6267	10	8.515158			
100000398	6268	1	0	HARBISON BLVD	NE	HARBISON BLVD & PARKRIDGE DR
100000398	6268	2	0			
100000398	6268	3	0			
100000398	6268	4	0			
100000398	6268	5	0.265634			
100000398	6268	6	0.392265			
100000398	6268	7	0			
100000398	6268	8	0			
100000398	6268	9	0			
100000398	6268	10	0.043206			
100000399	5113	1	29.724347	PINEY GROVE RD	E	PINEY GROVE RD & FERNANDINA RD
100000399	5113	2	34.444542			
100000399	5113	3	27.351037			
100000399	5113	4	31.727972			
100000399	5113	5	27.737922			
100000399	5113	6	26.625892			
100000399	5113	7	30.973179			
100000399	5113	8	29.248158			
100000399	5113	9	27.359111			
100000399	5113	10	32.673126			
100000399	6263	1	14.605243	PINEY GROVE RD	W	PINEY GROVE RD & FERNANDINA RD
100000399	6263	2	19.537217			
100000399	6263	3	17.159069			
100000399	6263	4	18.284995			
100000399	6263	5	15.549111			
100000399	6263	6	16.204923			
100000399	6263	7	17.30763			
100000399	6263	8	16.873096			
100000399	6263	9	17.858271			
100000399	6263	10	17.856341			
100000399	6265	1	9.983057	FERNANDINA RD	SE	PINEY GROVE RD & FERNANDINA RD
100000399	6265	2	7.76076			
100000399	6265	3	7.626983			
100000399	6265	4	10.31618			
100000399	6265	5	10.984186			
100000399	6265	6	9.640782			
100000399	6265	7	7.459755			
100000399	6265	8	7.671578			
100000399	6265	9	7.542071			
100000399	6265	10	7.783807			
100000399	6266	1	21.090035	FERNANDINA RD	N	PINEY GROVE RD & FERNANDINA RD
100000399	6266	2	22.801105			
100000399	6266	3	21.143981			
100000399	6266	4	21.052304			
100000399	6266	5	24.373063			
100000399	6266	6	20.103306			
100000399	6266	7	20.9643			
100000399	6266	8	21.563127			
100000399	6266	9	21.822229			
100000399	6266	10	19.426634			
100000401	5093	1	9.749765	LAKE MURRAY BLVD	E	KINLEY RD, LAKE MURRAY BLVD & PARKRIDGE DR
100000401	5093	2	10.374998			
100000401	5093	3	10.393006			
100000401	5093	4	8.653384			
100000401	5093	5	8.823642			
100000401	5093	6	10.278849			
100000401	5093	7	10.15607			
100000401	5093	8	9.354197			
100000401	5093	9	9.656984			
100000401	5093	10	7.693911			
100000401	6276	1	23.41039	KINLEY RD	S	KINLEY RD, LAKE MURRAY BLVD & PARKRIDGE DR
100000401	6276	2	23.867309			
100000401	6276	3	28.062469			
100000401	6276	4	25.518366			
100000401	6276	5	22.926247			
100000401	6276	6	22.720945			
100000401	6276	7	25.729632			
100000401	6276	8	20.678312			
100000401	6276	9	19.662983			
100000401	6276	10	22.959728			

Node	Superlink	Run	Average Control Delay	Approach Street Name	Direction	Intersection
100000401	6313	1	17.948422	LAKE MURRAY BLVD	W	KINLEY RD, LAKE MURRAY BLVD & PARKRIDGE DR
100000401	6313	2	13.566984			
100000401	6313	3	16.840871			
100000401	6313	4	18.28825			
100000401	6313	5	21.614751			
100000401	6313	6	20.311245			
100000401	6313	7	13.188689			
100000401	6313	8	11.947287			
100000401	6313	9	18.636107			
100000401	6313	10	19.076236			
100000401	6556	1	29.321445	PARKRIDGE DR	N	KINLEY RD, LAKE MURRAY BLVD & PARKRIDGE DR
100000401	6556	2	34.782448			
100000401	6556	3	27.099966			
100000401	6556	4	37.009942			
100000401	6556	5	38.018173			
100000401	6556	6	44.752278			
100000401	6556	7	35.648898			
100000401	6556	8	45.842784			
100000401	6556	9	35.413077			
100000401	6556	10	27.225491			
100000438	2044	1	0	RAMP	SE	RAMP, SUNSET BLVD & I-20 EXIT 61 EB ON RAMP
100000438	2044	2	0			
100000438	2044	3	0			
100000438	2044	4	0			
100000438	2044	5	0			
100000438	2044	6	0			
100000438	2044	7	0			
100000438	2044	8	0			
100000438	2044	9	0			
100000438	2044	10	0			
100000438	5021	1	3.066888	SUNSET BLVD	NW	RAMP, SUNSET BLVD & I-20 EXIT 61 EB ON RAMP
100000438	5021	2	3.632696			
100000438	5021	3	3.808816			
100000438	5021	4	3.458896			
100000438	5021	5	3.98564			
100000438	5021	6	3.840679			
100000438	5021	7	3.859763			
100000438	5021	8	3.13253			
100000438	5021	9	3.356136			
100000438	5021	10	3.395049			
100000438	5023	1	0.525842	SUNSET BLVD	SE	RAMP, SUNSET BLVD & I-20 EXIT 61 EB ON RAMP
100000438	5023	2	0.409567			
100000438	5023	3	0.395331			
100000438	5023	4	0.525896			
100000438	5023	5	0.319911			
100000438	5023	6	0.181134			
100000438	5023	7	0.306343			
100000438	5023	8	0.711804			
100000438	5023	9	0.380326			
100000438	5023	10	0.563571			
100000446	2047	1	0	RAMP	S	RAMP & I-20 EXIT 63 WB ON RAMP
100000446	2047	2	0			
100000446	2047	3	0			
100000446	2047	4	0			
100000446	2047	5	0			
100000446	2047	6	0			
100000446	2047	7	0			
100000446	2047	8	0			
100000446	2047	9	0			
100000446	2047	10	0			
100000446	2059	1	0	RAMP	SW	RAMP & I-20 EXIT 63 WB ON RAMP
100000446	2059	2	0			
100000446	2059	3	0			
100000446	2059	4	0			
100000446	2059	5	0			
100000446	2059	6	0			
100000446	2059	7	0			
100000446	2059	8	0			
100000446	2059	9	0			
100000446	2059	10	0			
100000450	2060	1	0	RAMP	E	BUSH RIVER RD, RAMP & I-20 EXIT 63 EB ON RAMP
100000450	2060	2	0			
100000450	2060	3	0			
100000450	2060	4	0			
100000450	2060	5	0			
100000450	2060	6	0			
100000450	2060	7	0			
100000450	2060	8	0			
100000450	2060	9	0			
100000450	2060	10	0			
100000450	5037	1	0	BUSH RIVER RD	E	BUSH RIVER RD, RAMP & I-20 EXIT 63 EB ON RAMP
100000450	5037	2	0			
100000450	5037	3	0			
100000450	5037	4	0			
100000450	5037	5	0			
100000450	5037	6	0			
100000450	5037	7	0			
100000450	5037	8	0			
100000450	5037	9	0			
100000450	5037	10	0			
100000450	5038	1	0.958611	BUSH RIVER RD	NW	BUSH RIVER RD, RAMP & I-20 EXIT 63 EB ON RAMP
100000450	5038	2	1.155221			
100000450	5038	3	0.925483			
100000450	5038	4	1.086191			
100000450	5038	5	1.606809			
100000450	5038	6	1.455927			
100000450	5038	7	0.889968			
100000450	5038	8	1.054537			
100000450	5038	9	1.10375			
100000450	5038	10	1.365422			
100000452	2071	1	17.400745	RAMP	W	RAMP & BUSH RIVER RD
100000452	2071	2	16.40255			
100000452	2071	3	17.823485			
100000452	2071	4	18.253486			
100000452	2071	5	17.246195			
100000452	2071	6	19.094651			
100000452	2071	7	15.850254			
100000452	2071	8	18.173413			
100000452	2071	9	19.155388			
100000452	2071	10	17.258156			
100000452	5034	1	0.065993	BUSH RIVER RD	NW	RAMP & BUSH RIVER RD
100000452	5034	2	0.092389			

Node	Superlink	Run	Average Control Delay	Approach Street Name	Direction	Intersection
100000452	5034	3	0.104428			
100000452	5034	4	0.08905			
100000452	5034	5	0.02332			
100000452	5034	6	0.156645			
100000452	5034	7	0.020587			
100000452	5034	8	0.149923			
100000452	5034	9	0.48787			
100000452	5034	10	0.017999			
100000452	5457	1	3.706231	BUSH RIVER RD	SE	RAMP & BUSH RIVER RD
100000452	5457	2	3.167106			
100000452	5457	3	2.358			
100000452	5457	4	2.499109			
100000452	5457	5	3.705645			
100000452	5457	6	4.549741			
100000452	5457	7	5.213647			
100000452	5457	8	3.9434			
100000452	5457	9	4.983644			
100000452	5457	10	3.583802			
100000455	5457	1	2.476222	BUSH RIVER RD	NW	FRONTAGE RD & BUSH RIVER RD
100000455	5457	2	2.430963			
100000455	5457	3	2.56498			
100000455	5457	4	2.415733			
100000455	5457	5	2.619427			
100000455	5457	6	3.355673			
100000455	5457	7	2.783477			
100000455	5457	8	3.210159			
100000455	5457	9	3.467898			
100000455	5457	10	2.54308			
100000455	6538	1	38.832677	FRONTAGE RD	SW	FRONTAGE RD & BUSH RIVER RD
100000455	6538	2	38.663412			
100000455	6538	3	37.379			
100000455	6538	4	40.34768			
100000455	6538	5	36.839449			
100000455	6538	6	32.940571			
100000455	6538	7	36.650494			
100000455	6538	8	39.646875			
100000455	6538	9	39.84358			
100000455	6538	10	39.310458			
100000455	6539	1	1.91813	BUSH RIVER RD	SE	FRONTAGE RD & BUSH RIVER RD
100000455	6539	2	2.881573			
100000455	6539	3	2.08191			
100000455	6539	4	1.5437			
100000455	6539	5	1.89036			
100000455	6539	6	2.344067			
100000455	6539	7	2.809859			
100000455	6539	8	3.131109			
100000455	6539	9	2.919232			
100000455	6539	10	1.958654			
100000467	3225	1		RAMP	SW	RAMP & I-126 WB ON RAMP FROM GREYSTONE BLVD
100000467	3225	2				
100000467	3225	3				
100000467	3225	4				
100000467	3225	5				
100000467	3225	6				
100000467	3225	7				
100000467	3225	8				
100000467	3225	9				
100000467	3225	10				
100000467	3238	1	0	RAMP	W	RAMP & I-126 WB ON RAMP FROM GREYSTONE BLVD
100000467	3238	2	0			
100000467	3238	3	0			
100000467	3238	4	0			
100000467	3238	5	0			
100000467	3238	6	0			
100000467	3238	7	0			
100000467	3238	8	0			
100000467	3238	9	0			
100000467	3238	10	0			
100000468	3228	1	0	EXIT 103 WB ON RAMP	NW	EXIT 103 WB ON RAMP & I-26 EXIT 103 WB ON RAMP
100000468	3228	2	0			
100000468	3228	3	0			
100000468	3228	4	0			
100000468	3228	5	0			
100000468	3228	6	0			
100000468	3228	7	0			
100000468	3228	8	0			
100000468	3228	9	0			
100000468	3228	10	0			
100000468	3241	1		EXIT 103 WB ON RAMP	W	EXIT 103 WB ON RAMP & I-26 EXIT 103 WB ON RAMP
100000468	3241	2	0			
100000468	3241	3	0			
100000468	3241	4	0			
100000468	3241	5				
100000468	3241	6				
100000468	3241	7				
100000468	3241	8	0			
100000468	3241	9	0			
100000468	3241	10				
100000476	3257	1	0	RAMP	N	RAMP
100000476	3257	2	0			
100000476	3257	3	0			
100000476	3257	4	0			
100000476	3257	5	0			
100000476	3257	6	0			
100000476	3257	7	0			
100000476	3257	8	0			
100000476	3257	9	0			
100000476	3257	10	0			
100000476	3262	1	0	RAMP	N	RAMP
100000476	3262	2	0			
100000476	3262	3	0			
100000476	3262	4	0			
100000476	3262	5	0			
100000476	3262	6	0			
100000476	3262	7	0			
100000476	3262	8	0			
100000476	3262	9	0			
100000476	3262	10	0			
100000494	3302	1	0	EXIT 106 WB ON RAMP	NW	EXIT 106 WB ON RAMP & I-26 EXIT 106 WB ON RAMP
100000494	3302	2	0			
100000494	3302	3	0			
100000494	3302	4	0			

Node	Superlink	Run	Average Control Delay	Approach Street Name	Direction	Intersection
100000494	3302	5	0			
100000494	3302	6	0			
100000494	3302	7	0			
100000494	3302	8	0			
100000494	3302	9	0			
100000494	3302	10	0			
100000494	3306	1	0	EXIT 106 WB ON RAMP	NW	EXIT 106 WB ON RAMP & I-26 EXIT 106 WB ON RAMP
100000494	3306	2	0			
100000494	3306	3	0			
100000494	3306	4	0			
100000494	3306	5	0			
100000494	3306	6	0			
100000494	3306	7	0			
100000494	3306	8	0			
100000494	3306	9	0			
100000494	3306	10	0			
100000497	3310	1	0	RAMP	SE	RAMP & I-26 EXIT 104 EB ON RAMP
100000497	3310	2	0			
100000497	3310	3	0			
100000497	3310	4	0			
100000497	3310	5	0			
100000497	3310	6	0			
100000497	3310	7	0			
100000497	3310	8	0			
100000497	3310	9	0			
100000497	3310	10	0			
100000497	6545	1	0	RAMP	SE	RAMP & I-26 EXIT 104 EB ON RAMP
100000497	6545	2	0			
100000497	6545	3	0			
100000497	6545	4	0			
100000497	6545	5	0			
100000497	6545	6	0			
100000497	6545	7	0			
100000497	6545	8	0			
100000497	6545	9	0			
100000497	6545	10	0			
100000503	3325	1	0	RAMP	SE	RAMP, 6472 (W) & I-26 EXIT 103 EB ON RAMP
100000503	3325	2	0			
100000503	3325	3	0			
100000503	3325	4	0			
100000503	3325	5	0			
100000503	3325	6	0			
100000503	3325	7	0			
100000503	3325	8	0			
100000503	3325	9	0			
100000503	3325	10	0			
100000503	6472	1	0		E	RAMP, 6472 (W) & I-26 EXIT 103 EB ON RAMP
100000503	6472	2	0			
100000503	6472	3	0			
100000503	6472	4	0			
100000503	6472	5	0			
100000503	6472	6	0			
100000503	6472	7	0			
100000503	6472	8	0			
100000503	6472	9	0			
100000503	6472	10	0			
100000520	3345	1		EXIT 102 WB ON RAMP	N	EXIT 102 WB ON RAMP & I-26 EXIT 102 WB ON RAMP
100000520	3345	2				
100000520	3345	3				
100000520	3345	4				
100000520	3345	5				
100000520	3345	6				
100000520	3345	7				
100000520	3345	8				
100000520	3345	9				
100000520	3345	10				
100000520	3350	1	0	EXIT 102 WB ON RAMP	N	EXIT 102 WB ON RAMP & I-26 EXIT 102 WB ON RAMP
100000520	3350	2	0			
100000520	3350	3	0			
100000520	3350	4	0			
100000520	3350	5	0			
100000520	3350	6	0			
100000520	3350	7	0			
100000520	3350	8	0			
100000520	3350	9	0			
100000520	3350	10	0			
100000523	3355	1	0	ON-RAMP from WB	S	ON-RAMP from WB, ON-RAMP from EB & I-26 EXIT 101 EB ON RAMP
100000523	3355	2	0			
100000523	3355	3	0			
100000523	3355	4	0			
100000523	3355	5	0			
100000523	3355	6	0			
100000523	3355	7	0			
100000523	3355	8	0			
100000523	3355	9	0			
100000523	3355	10	0			
100000523	3356	1	0	ON-RAMP from EB	S	ON-RAMP from WB, ON-RAMP from EB & I-26 EXIT 101 EB ON RAMP
100000523	3356	2	0			
100000523	3356	3	0			
100000523	3356	4	0			
100000523	3356	5	0			
100000523	3356	6	0			
100000523	3356	7	0			
100000523	3356	8	0			
100000523	3356	9	0			
100000523	3356	10	0			
100000528	3360	1		EXIT 101 WB ON RAMP	N	EXIT 101 WB ON RAMP & I-26 EXIT 101 WB ON RAMP
100000528	3360	2				
100000528	3360	3				
100000528	3360	4				
100000528	3360	5				
100000528	3360	6				
100000528	3360	7				
100000528	3360	8				
100000528	3360	9				
100000528	3360	10				
100000528	3364	1	0	EXIT 101 WB ON RAMP	N	EXIT 101 WB ON RAMP & I-26 EXIT 101 WB ON RAMP
100000528	3364	2	0			
100000528	3364	3	0			
100000528	3364	4	0			
100000528	3364	5	0			
100000528	3364	6	0			

Node	Superlink	Run	Average Control Delay	Approach Street Name	Direction	Intersection
100000528	3364	7	0			
100000528	3364	8	0			
100000528	3364	9	0			
100000528	3364	10	0			
100000702	4338	1	0	RAMP	SW	RAMP & I-20 EXIT 65 WB ON RAMP
100000702	4338	2	0			
100000702	4338	3	0			
100000702	4338	4	0			
100000702	4338	5	0			
100000702	4338	6	0			
100000702	4338	7	0			
100000702	4338	8	0			
100000702	4338	9	0			
100000702	4338	10	0			
100000702	4343	1	0	RAMP	SW	RAMP & I-20 EXIT 65 WB ON RAMP
100000702	4343	2	0			
100000702	4343	3	0			
100000702	4343	4	0			
100000702	4343	5	0			
100000702	4343	6	0			
100000702	4343	7	0			
100000702	4343	8	0			
100000702	4343	9	0			
100000702	4343	10	0			
100000707	5166	1	0	MONTICELLO RD	NW	MONTICELLO RD, SERVICE RD & RAMP
100000707	5166	2	0			
100000707	5166	3	0			
100000707	5166	4	0			
100000707	5166	5	0			
100000707	5166	6	0			
100000707	5166	7	0			
100000707	5166	8	0			
100000707	5166	9	0			
100000707	5166	10	0			
100000707	5168	1	0	SERVICE RD	W	MONTICELLO RD, SERVICE RD & RAMP
100000707	5168	2	0			
100000707	5168	3	0			
100000707	5168	4	0			
100000707	5168	5	0			
100000707	5168	6	0			
100000707	5168	7	0			
100000707	5168	8	0			
100000707	5168	9	0			
100000707	5168	10	0			
100000707	5174	1	0.669219	MONTICELLO RD	SE	MONTICELLO RD, SERVICE RD & RAMP
100000707	5174	2	1.196805			
100000707	5174	3	1.283036			
100000707	5174	4	0.72072			
100000707	5174	5	0.791178			
100000707	5174	6	0.537258			
100000707	5174	7	0.802041			
100000707	5174	8	0.923239			
100000707	5174	9	1.238394			
100000707	5174	10	1.089145			
100000709	4352	1	0	RAMP	S	RAMP & I-20 EXIT 68 WB ON RAMP
100000709	4352	2	0			
100000709	4352	3	0			
100000709	4352	4	0			
100000709	4352	5	0			
100000709	4352	6	0			
100000709	4352	7	0			
100000709	4352	8	0			
100000709	4352	9	0			
100000709	4352	10	0			
100000709	4353	1	0	RAMP	S	RAMP & I-20 EXIT 68 WB ON RAMP
100000709	4353	2	0			
100000709	4353	3	0			
100000709	4353	4	0			
100000709	4353	5	0			
100000709	4353	6	0			
100000709	4353	7	0			
100000709	4353	8	0			
100000709	4353	9	0			
100000709	4353	10	0			
100000710	4356	1	0	I-20 EXIT 68 WB OFF RAMP	W	I-20 EXIT 68 WB OFF RAMP & SERVICE RD
100000710	4356	2	0			
100000710	4356	3	0			
100000710	4356	4	0			
100000710	4356	5	0			
100000710	4356	6	0			
100000710	4356	7	0			
100000710	4356	8	0			
100000710	4356	9	0			
100000710	4356	10	0			
100000712	5157	1	0.065173	BUCKNER RD	NE	BUCKNER RD & RAMP
100000712	5157	2	0.08012			
100000712	5157	3	0.055099			
100000712	5157	4	0.069276			
100000712	5157	5	0.043878			
100000712	5157	6	0.038111			
100000712	5157	7	0.050173			
100000712	5157	8	0.044552			
100000712	5157	9	0.050043			
100000712	5157	10	0.063141			
100000712	5160	1	11.413688	BUCKNER RD	SW	BUCKNER RD & RAMP
100000712	5160	2	11.938114			
100000712	5160	3	13.39835			
100000712	5160	4	11.818943			
100000712	5160	5	10.299576			
100000712	5160	6	11.506174			
100000712	5160	7	8.929863			
100000712	5160	8	10.237247			
100000712	5160	9	12.6728			
100000712	5160	10	12.166929			
100000804	6261	1	19.099487	TRAM RD	SW	TRAM RD & SIDNEY RD
100000804	6261	2	14.481462			
100000804	6261	3	19.481273			
100000804	6261	4	19.31641			
100000804	6261	5	15.986382			
100000804	6261	6	19.767848			
100000804	6261	7	12.368413			
100000804	6261	8	15.425771			

Node	Superlink	Run	Average Control Delay	Approach Street Name	Direction	Intersection
100000804	6261	9	21.197417			
100000804	6261	10	27.114279			
100000804	6457	1	20.581034	SIDNEY RD	NW	TRAM RD & SIDNEY RD
100000804	6457	2	20.314447			
100000804	6457	3	18.935647			
100000804	6457	4	48.449956			
100000804	6457	5	19.464437			
100000804	6457	6	24.409414			
100000804	6457	7	16.672553			
100000804	6457	8	16.168232			
100000804	6457	9	22.085314			
100000804	6457	10	26.258363			
100000804	6458	1	2.049391	TRAM RD	NE	TRAM RD & SIDNEY RD
100000804	6458	2	2.236877			
100000804	6458	3	2.092804			
100000804	6458	4	2.217669			
100000804	6458	5	2.389853			
100000804	6458	6	1.885022			
100000804	6458	7	2.131112			
100000804	6458	8	2.067517			
100000804	6458	9	2.36847			
100000804	6458	10	1.962264			
100000882	5151	1		SERVICE RD	SW	SERVICE RD, 6449 (S) & 6448 (W)
100000882	5151	2				
100000882	5151	3				
100000882	5151	4				
100000882	5151	5				
100000882	5151	6				
100000882	5151	7				
100000882	5151	8				
100000882	5151	9				
100000882	5151	10				
100000882	6446	1	0	SERVICE RD	NE	SERVICE RD, 6449 (S) & 6448 (W)
100000882	6446	2	0			
100000882	6446	3	0			
100000882	6446	4	0			
100000882	6446	5	0			
100000882	6446	6	0			
100000882	6446	7	0			
100000882	6446	8	0			
100000882	6446	9	0			
100000882	6446	10	0			
100000882	6449	1	0		N	SERVICE RD, 6449 (S) & 6448 (W)
100000882	6449	2	0			
100000882	6449	3	0			
100000882	6449	4	0			
100000882	6449	5	0			
100000882	6449	6	0			
100000882	6449	7	0			
100000882	6449	8	0			
100000882	6449	9	0			
100000882	6449	10	0			
100000883	5148	1	0	BROAD RIVER RD	NW	BROAD RIVER RD & 6448 (E)
100000883	5148	2	0			
100000883	5148	3	0			
100000883	5148	4	0			
100000883	5148	5	0.000052			
100000883	5148	6	0			
100000883	5148	7	0			
100000883	5148	8	0			
100000883	5148	9	0.000071			
100000883	5148	10	0			
100000883	6447	1	10.669476	BROAD RIVER RD	SE	BROAD RIVER RD & 6448 (E)
100000883	6447	2	9.804722			
100000883	6447	3	10.207409			
100000883	6447	4	10.240508			
100000883	6447	5	10.440002			
100000883	6447	6	11.032872			
100000883	6447	7	10.730527			
100000883	6447	8	11.122107			
100000883	6447	9	8.583115			
100000883	6447	10	11.58722			
100000883	6448	1			W	BROAD RIVER RD & 6448 (E)
100000883	6448	2				
100000883	6448	3				
100000883	6448	4				
100000883	6448	5				
100000883	6448	6				
100000883	6448	7				
100000883	6448	8				
100000883	6448	9				
100000883	6448	10				
100000895	3229	1	0	RAMP	SW	RAMP & PINEY GROVE RD
100000895	3229	2	0			
100000895	3229	3	0			
100000895	3229	4	0			
100000895	3229	5	0			
100000895	3229	6	0			
100000895	3229	7	0			
100000895	3229	8	0			
100000895	3229	9	0			
100000895	3229	10	0			
100000895	6543	1	8.199821	PINEY GROVE RD	E	RAMP & PINEY GROVE RD
100000895	6543	2	6.582363			
100000895	6543	3	5.818253			
100000895	6543	4	6.247297			
100000895	6543	5	6.540874			
100000895	6543	6	5.894443			
100000895	6543	7	8.216757			
100000895	6543	8	6.965159			
100000895	6543	9	6.755744			
100000895	6543	10	6.83377			
100000895	6544	1	0	PINEY GROVE RD	W	RAMP & PINEY GROVE RD
100000895	6544	2	0			
100000895	6544	3	0			
100000895	6544	4	0			
100000895	6544	5	0			
100000895	6544	6	0			
100000895	6544	7	0			
100000895	6544	8	0			
100000895	6544	9	0			
100000895	6544	10	0			

Node	Superlink	Run	Average Control Delay	Approach Street Name	Direction	Intersection
100000897	3243	1	4.049559	I-126 WB OFF RAMP TO COLONIAL LIFE BLVD	NE	I-126 WB OFF RAMP TO COLONIAL LIFE BLVD, W COLONIAL LIFE BLVD, COLONIAL LIFE BLVD W & I-126 EB ON RA
100000897	3243	2	4.580667			
100000897	3243	3	2.673512			
100000897	3243	4	5.395766			
100000897	3243	5	4.243945			
100000897	3243	6	5.132029			
100000897	3243	7	7.114619			
100000897	3243	8	3.592918			
100000897	3243	9	4.342561			
100000897	3243	10	4.839221			
100000897	5134	1	7.521105	W COLONIAL LIFE BLVD	NW	I-126 WB OFF RAMP TO COLONIAL LIFE BLVD, W COLONIAL LIFE BLVD, COLONIAL LIFE BLVD W & I-126 EB ON RA
100000897	5134	2	7.772147			
100000897	5134	3	7.706188			
100000897	5134	4	7.504508			
100000897	5134	5	6.591481			
100000897	5134	6	6.938751			
100000897	5134	7	6.93704			
100000897	5134	8	7.382006			
100000897	5134	9	7.588717			
100000897	5134	10	7.163211			
100000897	6471	1	0.364518	COLONIAL LIFE BLVD W	S	I-126 WB OFF RAMP TO COLONIAL LIFE BLVD, W COLONIAL LIFE BLVD, COLONIAL LIFE BLVD W & I-126 EB ON RA
100000897	6471	2	0.251818			
100000897	6471	3	0.320518			
100000897	6471	4	0.28302			
100000897	6471	5	0.219434			
100000897	6471	6	0.30716			
100000897	6471	7	0.288036			
100000897	6471	8	0.269381			
100000897	6471	9	0.281064			
100000897	6471	10	0.330678			
100000898	51	1	34.960103	I-26 EXIT 108 EB OFF RAMP	S	I-26 EXIT 108 EB OFF RAMP, BUSH RIVER RD & RAMF
100000898	51	2	38.583927			
100000898	51	3	42.696917			
100000898	51	4	43.758758			
100000898	51	5	39.600954			
100000898	51	6	46.972507			
100000898	51	7	38.899804			
100000898	51	8	42.361565			
100000898	51	9	37.36562			
100000898	51	10	40.533457			
100000898	5130	1	24.749584	BUSH RIVER RD	N	I-26 EXIT 108 EB OFF RAMP, BUSH RIVER RD & RAMF
100000898	5130	2	17.895357			
100000898	5130	3	21.792044			
100000898	5130	4	22.892252			
100000898	5130	5	17.081384			
100000898	5130	6	22.613121			
100000898	5130	7	19.248726			
100000898	5130	8	18.689127			
100000898	5130	9	22.47761			
100000898	5130	10	16.783401			
100000898	5131	1	5.496546	BUSH RIVER RD	E	I-26 EXIT 108 EB OFF RAMP, BUSH RIVER RD & RAMF
100000898	5131	2	6.169249			
100000898	5131	3	5.525234			
100000898	5131	4	5.032874			
100000898	5131	5	6.041556			
100000898	5131	6	5.42113			
100000898	5131	7	4.686054			
100000898	5131	8	6.368073			
100000898	5131	9	5.691841			
100000898	5131	10	6.024457			
100000898	6503	1	7.49908	BUSH RIVER RD	W	I-26 EXIT 108 EB OFF RAMP, BUSH RIVER RD & RAMF
100000898	6503	2	8.062566			
100000898	6503	3	7.627096			
100000898	6503	4	6.223433			
100000898	6503	5	7.826788			
100000898	6503	6	6.703905			
100000898	6503	7	6.206044			
100000898	6503	8	8.97493			
100000898	6503	9	9.224224			
100000898	6503	10	8.350507			
100000899	3298	1	9.211356	EXIT 106 WB OFF RAMP	SE	EXIT 106 WB OFF RAMP & BURNING TREE RD
100000899	3298	2	8.589651			
100000899	3298	3	9.313532			
100000899	3298	4	10.443769			
100000899	3298	5	8.849406			
100000899	3298	6	10.24071			
100000899	3298	7	9.628803			
100000899	3298	8	8.582685			
100000899	3298	9	9.24753			
100000899	3298	10	8.755911			
100000899	6105	1	0	BURNING TREE RD	S	EXIT 106 WB OFF RAMP & BURNING TREE RD
100000899	6105	2	0			
100000899	6105	3	0			
100000899	6105	4	0			
100000899	6105	5	0			
100000899	6105	6	0			
100000899	6105	7	0			
100000899	6105	8	0			
100000899	6105	9	0			
100000899	6105	10	0			
100000899	6106	1	0	BURNING TREE RD	N	EXIT 106 WB OFF RAMP & BURNING TREE RD
100000899	6106	2	0			
100000899	6106	3	0			
100000899	6106	4	0			
100000899	6106	5	0			
100000899	6106	6	0			
100000899	6106	7	0			
100000899	6106	8	0			
100000899	6106	9	0			
100000899	6106	10	0			
100000902	4292	1	27.679237	EXIT 110 WB OFF RAMP	NE	SUNSET BLVD, EXIT 110 WB OFF RAMP & EXIT 108 WB ON RAMP
100000902	4292	2	22.39076			
100000902	4292	3	25.309923			
100000902	4292	4	20.16603			
100000902	4292	5	24.235075			
100000902	4292	6	24.318592			
100000902	4292	7	22.519119			
100000902	4292	8	20.558132			
100000902	4292	9	28.98318			
100000902	4292	10	24.694568			
100000902	4947	1	4.425856	SUNSET BLVD	W	SUNSET BLVD, EXIT 110 WB OFF RAMP & EXIT 108 WB ON RAMP
100000902	4947	2	7.321088			

Node	Superlink	Run	Average Control Delay	Approach Street Name	Direction	Intersection
100000902	4947	3	5.726837			
100000902	4947	4	5.888615			
100000902	4947	5	5.265197			
100000902	4947	6	5.634297			
100000902	4947	7	4.191211			
100000902	4947	8	5.964259			
100000902	4947	9	4.691405			
100000902	4947	10	4.975155			
100000902	4951	1	0.008156	SUNSET BLVD	E	SUNSET BLVD, EXIT 110 WB OFF RAMP & EXIT 108 WB ON RAMP
100000902	4951	2	0.03138			
100000902	4951	3	0.024242			
100000902	4951	4	0.008889			
100000902	4951	5	0.014809			
100000902	4951	6	0.014975			
100000902	4951	7	0.006594			
100000902	4951	8	0.029122			
100000902	4951	9	0.015076			
100000902	4951	10	0.018687			
100000903	4289	1	46.339058	EXIT 110 WB OFF RAMP	NW	RAMP, SUNSET BLVD, EXIT 110 WB OFF RAMP & EXIT 108 WB ON RAMP
100000903	4289	2	42.760773			
100000903	4289	3	42.941468			
100000903	4289	4	44.48757			
100000903	4289	5	43.386108			
100000903	4289	6	44.421419			
100000903	4289	7	45.310652			
100000903	4289	8	41.911013			
100000903	4289	9	45.37644			
100000903	4289	10	44.167595			
100000903	4298	1	28.160446	RAMP	SE	RAMP, SUNSET BLVD, EXIT 110 WB OFF RAMP & EXIT 108 WB ON RAMP
100000903	4298	2	28.858996			
100000903	4298	3	27.764927			
100000903	4298	4	29.528821			
100000903	4298	5	27.895175			
100000903	4298	6	28.021051			
100000903	4298	7	27.259974			
100000903	4298	8	28.00683			
100000903	4298	9	29.01264			
100000903	4298	10	27.663613			
100000903	4950	1	13.585817	SUNSET BLVD	E	RAMP, SUNSET BLVD, EXIT 110 WB OFF RAMP & EXIT 108 WB ON RAMP
100000903	4950	2	14.153209			
100000903	4950	3	13.468588			
100000903	4950	4	14.142249			
100000903	4950	5	13.102235			
100000903	4950	6	13.749313			
100000903	4950	7	12.79538			
100000903	4950	8	13.37083			
100000903	4950	9	13.151272			
100000903	4950	10	13.799137			
100000903	4951	1	31.825416	SUNSET BLVD	W	RAMP, SUNSET BLVD, EXIT 110 WB OFF RAMP & EXIT 108 WB ON RAMP
100000903	4951	2	31.2429			
100000903	4951	3	29.041336			
100000903	4951	4	31.310207			
100000903	4951	5	29.813795			
100000903	4951	6	29.527379			
100000903	4951	7	29.212459			
100000903	4951	8	29.194856			
100000903	4951	9	30.856931			
100000903	4951	10	30.307862			

2015 Existing PM

Node	Superlink	Run	Average Control Delay	Approach Street Name	Direction	Intersection
4	5081	1	3.190454	BROAD RIVER RD	W	WESTERN LN & BROAD RIVER RD
4	5081	2	3.483236			
4	5081	3	3.0			
4	5081	4	3.6			
4	5081	5	3.9			
4	5081	6	3.595102			
4	5081	7	3.986893			
4	5081	8	4.0			
4	5081	9	3.1			
4	5081	10	3.0			
4	6465	1	7.656442	WESTERN LN	S	WESTERN LN & BROAD RIVER RD
4	6465	2	7.641848			
4	6465	3	6.9			
4	6465	4	7.2			
4	6465	5	7.140844			
4	6465	6	7.009156			
4	6465	7	7.0			
4	6465	8	6.9			
4	6465	9	6.9			
4	6465	10	7.18534			
4	6466	1	3.859707	BROAD RIVER RD	E	WESTERN LN & BROAD RIVER RD
4	6466	2	4.3			
4	6466	3	4.7			
4	6466	4	4.504507			
4	6466	5	4.494138			
4	6466	6	4.3			
4	6466	7	4.5			
4	6466	8	4.214322			
4	6466	9	4.442414			
4	6466	10	3.8			
4	6467	1	5.3	WESTERN LN	N	WESTERN LN & BROAD RIVER RD
4	6467	2	6.8			
4	6467	3	5.723124			
4	6467	4	6.887955			
4	6467	5	6.4			
4	6467	6	5.8			
4	6467	7	5.4			
4	6467	8	5.915914			
4	6467	9	6.056252			
4	6467	10	6.2			
11	5487	1	0.0	MORNINGHILL DR	N	MORNINGHILL DR & BURNETTE DR
11	5487	2	0			
11	5487	3	0			
11	5487	4	0.0			
11	5487	5	0.0			
11	5487	6	0.0			
11	5487	7	0			
11	5487	8	0			
11	5487	9	0.0			
11	5487	10	0.0			
11	6536	1		MORNINGHILL DR	S	MORNINGHILL DR & BURNETTE DR
11	6536	2				
11	6536	3				
11	6536	4				
11	6536	5				
11	6536	6				
11	6536	7				
11	6536	8				
11	6536	9				
11	6536	10				
11	6537	1	0	BURNETTE DR	E	MORNINGHILL DR & BURNETTE DR
11	6537	2	0.0			
11	6537	3	0.0			
11	6537	4	0.0			
11	6537	5	0.0			
11	6537	6	0			
11	6537	7	0			
11	6537	8	0.0			
11	6537	9	0.0			
11	6537	10	0.0			
26	5488	1	0	RAMP	S	RAMP & 6502 (NW)
26	5488	2	0			
26	5488	3	0.0			
26	5488	4	0.0			
26	5488	5	0.0			
26	5488	6	0			
26	5488	7	0			
26	5488	8	0.0			
26	5488	9	0.0			
26	5488	10	0.0			
26	6501	1	9.498242	RAMP	N	RAMP & 6502 (NW)
26	6501	2	9.444127			
26	6501	3	9.1			
26	6501	4	10.0			
26	6501	5	9.5			
26	6501	6	8.847524			
26	6501	7	9.25274			
26	6501	8	9.9			
26	6501	9	9.5			
26	6501	10	9.6			
26	6502	1	0		SE	RAMP & 6502 (NW)
26	6502	2	0			
26	6502	3	0.0			
26	6502	4	0.0			
26	6502	5	0.0			
26	6502	6	0			

Node	Superlink	Run	Average Control Delay	Approach Street Name	Direction	Intersection
26	6502	7	0			
26	6502	8	0.0			
26	6502	9	0.0			
26	6502	10	0.0			
28	5140	1	0	GREYSTONE BLVD	S	GREYSTONE BLVD & CANDI LN
28	5140	2	0			
28	5140	3	0.0			
28	5140	4	0			
28	5140	5	0			
28	5140	6	0.0			
28	5140	7	0.0			
28	5140	8	0			
28	5140	9	0			
28	5140	10	0.0			
28	6506	1	6.8	GREYSTONE BLVD	W	GREYSTONE BLVD & CANDI LN
28	6506	2	6.75232			
28	6506	3	6.965107			
28	6506	4	6.9			
28	6506	5	6.8			
28	6506	6	6.6			
28	6506	7	6.445052			
28	6506	8	6.822938			
28	6506	9	6.9			
28	6506	10	6.7			
28	6507	1		CANDI LN	E	GREYSTONE BLVD & CANDI LN
28	6507	2				
28	6507	3				
28	6507	4				
28	6507	5				
28	6507	6				
28	6507	7				
28	6507	8				
28	6507	9				
28	6507	10				
41	6518	1	193.991413	BROAD RIVER RD	NW	DUTCH SQUARE BLVD & BROAD RIVER RD
41	6518	2	156.318002			
41	6518	3	159.4			
41	6518	4	108.4			
41	6518	5	112.3			
41	6518	6	103.856678			
41	6518	7	192.342725			
41	6518	8	185.8			
41	6518	9	163.9			
41	6518	10	147.5			
41	6519	1	32.253152	DUTCH SQUARE BLVD	E	DUTCH SQUARE BLVD & BROAD RIVER RD
41	6519	2	32.601552			
41	6519	3	32.2			
41	6519	4	32.1			
41	6519	5	58.3			
41	6519	6	38.48857			
41	6519	7	37.813374			
41	6519	8	33.2			
41	6519	9	35.8			
41	6519	10	32.522997			
41	6521	1	4.334239	BROAD RIVER RD	SE	DUTCH SQUARE BLVD & BROAD RIVER RD
41	6521	2	3.6			
41	6521	3	3.2			
41	6521	4	3.4			
41	6521	5	3.069544			
41	6521	6	2.889576			
41	6521	7	3.6			
41	6521	8	3.6			
41	6521	9	3.286374			
41	6521	10	4.161584			
43	6519	1	0.0	DUTCH SQUARE BLVD	W	DUTCH SQUARE BLVD & 6522 (N)
43	6519	2	0.0			
43	6519	3	0			
43	6519	4	0			
43	6519	5	0.0			
43	6519	6	0			
43	6519	7	0			
43	6519	8	0.0			
43	6519	9	0.0			
43	6519	10	0			
43	6520	1	53.380283	DUTCH SQUARE BLVD	E	DUTCH SQUARE BLVD & 6522 (N)
43	6520	2	33.1			
43	6520	3	31.7			
43	6520	4	30.8			
43	6520	5	44.618764			
43	6520	6	31.992361			
43	6520	7	86.8			
43	6520	8	35.7			
43	6520	9	29.625449			
43	6520	10	36.182174			
43	6522	1	0.0		SW	DUTCH SQUARE BLVD & 6522 (N)
43	6522	2	0.0			
43	6522	3	0			
43	6522	4	0			
43	6522	5	0.0			
43	6522	6	0.0			
43	6522	7	0.0			
43	6522	8	0			
43	6522	9	0			
43	6522	10	0			
46	6273	1	0.0	PARKRIDGE DR	NE	PARKRIDGE DR & 6555 (NE)
46	6273	2	0.0			
46	6273	3	0			
46	6273	4	0			
46	6273	5	0.0			
46	6273	6	0.0			
46	6273	7	0.0			
46	6273	8	0			
46	6273	9	0			
46	6273	10	0.0			
46	6555	1			SW	PARKRIDGE DR & 6555 (NE)
46	6555	2				
46	6555	3				
46	6555	4				
46	6555	5				
46	6555	6				
46	6555	7				
46	6555	8				

Node	Superlink	Run	Average Control Delay	Approach Street Name	Direction	Intersection
46	6555	9				
46	6555	10				
46	6556	1	8.554598	PARKRIDGE DR	SE	PARKRIDGE DR & 6555 (NE)
46	6556	2	7.776139			
46	6556	3	7.642063			
46	6556	4	9.240823			
46	6556	5	8.60098			
46	6556	6	8.008165			
46	6556	7	8.327437			
46	6556	8	8.799437			
46	6556	9	7.338017			
46	6556	10	7.886398			
100000012	5081	1	26.721163	BROAD RIVER RD	SE	KINLEY RD, BROAD RIVER RD & KENNERLY RD
100000012	5081	2	28.314354			
100000012	5081	3	21.771239			
100000012	5081	4	24.21962			
100000012	5081	5	22.643607			
100000012	5081	6	26.697034			
100000012	5081	7	23.380026			
100000012	5081	8	24.962007			
100000012	5081	9	22.924534			
100000012	5081	10	26.099373			
100000012	6276	1	56.818397	KINLEY RD	N	KINLEY RD, BROAD RIVER RD & KENNERLY RD
100000012	6276	2	53.641595			
100000012	6276	3	41.239448			
100000012	6276	4	54.515953			
100000012	6276	5	48.092748			
100000012	6276	6	49.649831			
100000012	6276	7	44.061325			
100000012	6276	8	42.546602			
100000012	6276	9	44.413395			
100000012	6276	10	46.335737			
100000012	6307	1	37.528138	KENNERLY RD	S	KINLEY RD, BROAD RIVER RD & KENNERLY RD
100000012	6307	2	81.851478			
100000012	6307	3	136.16824			
100000012	6307	4	93.515278			
100000012	6307	5	101.713841			
100000012	6307	6	106.270646			
100000012	6307	7	101.535002			
100000012	6307	8	103.432302			
100000012	6307	9	154.277672			
100000012	6307	10	122.915536			
100000012	6308	1	35.620388	BROAD RIVER RD	NW	KINLEY RD, BROAD RIVER RD & KENNERLY RD
100000012	6308	2	91.217399			
100000012	6308	3	99.368569			
100000012	6308	4	81.552734			
100000012	6308	5	84.659183			
100000012	6308	6	90.648335			
100000012	6308	7	57.739831			
100000012	6308	8	111.699739			
100000012	6308	9	56.250475			
100000012	6308	10	105.042942			
100000025	6267	1	0	PARKRIDGE DR	NW	CLUB RD & PARKRIDGE DR
100000025	6267	2	0			
100000025	6267	3	0			
100000025	6267	4	0			
100000025	6267	5	0			
100000025	6267	6	0			
100000025	6267	7	0			
100000025	6267	8	0			
100000025	6267	9	0			
100000025	6267	10	0			
100000025	6273	1	0	PARKRIDGE DR	SE	CLUB RD & PARKRIDGE DR
100000025	6273	2	0			
100000025	6273	3	0			
100000025	6273	4	0			
100000025	6273	5	0			
100000025	6273	6	0			
100000025	6273	7	0			
100000025	6273	8	0			
100000025	6273	9	0			
100000025	6273	10	0			
100000025	6304	1		CLUB RD	S	CLUB RD & PARKRIDGE DR
100000025	6304	2				
100000025	6304	3				
100000025	6304	4				
100000025	6304	5				
100000025	6304	6				
100000025	6304	7				
100000025	6304	8				
100000025	6304	9				
100000025	6304	10				
100000037	5101	1	24.975702	HARBISON BLVD	NE	BROAD RIVER RD & HARBISON BLVD
100000037	5101	2	22.322141			
100000037	5101	3	18.674801			
100000037	5101	4	21.285083			
100000037	5101	5	19.25947			
100000037	5101	6	24.750364			
100000037	5101	7	19.708985			
100000037	5101	8	22.255874			
100000037	5101	9	20.817268			
100000037	5101	10	21.599357			
100000037	6317	1	9.216188	BROAD RIVER RD	SE	BROAD RIVER RD & HARBISON BLVD
100000037	6317	2	10.539255			
100000037	6317	3	8.329348			
100000037	6317	4	10.732093			
100000037	6317	5	9.384485			
100000037	6317	6	12.020416			
100000037	6317	7	11.725522			
100000037	6317	8	10.847215			
100000037	6317	9	10.903616			
100000037	6317	10	10.295903			
100000037	6320	1	5.05291	BROAD RIVER RD	NW	BROAD RIVER RD & HARBISON BLVD
100000037	6320	2	5.247905			
100000037	6320	3	5.398214			
100000037	6320	4	5.516422			
100000037	6320	5	5.401354			
100000037	6320	6	12.211305			
100000037	6320	7	5.928619			
100000037	6320	8	6.264443			
100000037	6320	9	5.587672			
100000037	6320	10	5.661426			

Node	Superlink	Run	Average Control Delay	Approach Street Name	Direction	Intersection
100000038	6232	1	0	BROAD RIVER RD	NW	BROAD RIVER RD & 6311 (S)
100000038	6232	2	0			
100000038	6232	3	0			
100000038	6232	4	0			
100000038	6232	5	0			
100000038	6232	6	0			
100000038	6232	7	0			
100000038	6232	8	0			
100000038	6232	9	0			
100000038	6232	10	0			
100000038	6311	1	19.337475		N	BROAD RIVER RD & 6311 (S)
100000038	6311	2	9.334062			
100000038	6311	3	6.112635			
100000038	6311	4	12.491357			
100000038	6311	5	6.221417			
100000038	6311	6	10.497292			
100000038	6311	7	10.790799			
100000038	6311	8	3.458093			
100000038	6311	9	8.411087			
100000038	6311	10	7.412252			
100000038	6312	1	0	BROAD RIVER RD	SE	BROAD RIVER RD & 6311 (S)
100000038	6312	2	0.003427			
100000038	6312	3	0.004545			
100000038	6312	4	0.010169			
100000038	6312	5	0			
100000038	6312	6	0.005865			
100000038	6312	7	0.001667			
100000038	6312	8	0.005585			
100000038	6312	9	0			
100000038	6312	10	0			
100000041	6281	1	0	LAKE MURRAY BLVD	W	LAKE MURRAY BLVD & 6311 (N)
100000041	6281	2	0.037603			
100000041	6281	3	0.006639			
100000041	6281	4	0.019949			
100000041	6281	5	0			
100000041	6281	6	0.735889			
100000041	6281	7	0.0019			
100000041	6281	8	0			
100000041	6281	9	0			
100000041	6281	10	0			
100000041	6311	1			SW	LAKE MURRAY BLVD & 6311 (N)
100000041	6311	2				
100000041	6311	3				
100000041	6311	4	18.783485			
100000041	6311	5				
100000041	6311	6				
100000041	6311	7				
100000041	6311	8				
100000041	6311	9				
100000041	6311	10				
100000041	6313	1	0.060616	LAKE MURRAY BLVD	E	LAKE MURRAY BLVD & 6311 (N)
100000041	6313	2	0.36162			
100000041	6313	3	0.038853			
100000041	6313	4	0.090596			
100000041	6313	5	0.188793			
100000041	6313	6	0.276515			
100000041	6313	7	0.228532			
100000041	6313	8	0.13333			
100000041	6313	9	0.129404			
100000041	6313	10	0.274508			
100000046	5511	1	77.542422	BUSH RIVER RD	E	BUSH RIVER RD, BROAD RIVER RD & ELM ABODE TER
100000046	5511	2	66.490606			
100000046	5511	3	85.718669			
100000046	5511	4	54.368294			
100000046	5511	5	55.502243			
100000046	5511	6	75.709376			
100000046	5511	7	70.800528			
100000046	5511	8	87.916318			
100000046	5511	9	73.72612			
100000046	5511	10	47.807201			
100000046	6323	1	91.519775	BROAD RIVER RD	NW	BUSH RIVER RD, BROAD RIVER RD & ELM ABODE TER
100000046	6323	2	87.214255			
100000046	6323	3	77.961326			
100000046	6323	4	30.234358			
100000046	6323	5	74.617175			
100000046	6323	6	37.968116			
100000046	6323	7	93.467358			
100000046	6323	8	75.976764			
100000046	6323	9	69.954779			
100000046	6323	10	43.33705			
100000046	6324	1	99.726563	ELM ABODE TER	SW	BUSH RIVER RD, BROAD RIVER RD & ELM ABODE TER
100000046	6324	2	89.999296			
100000046	6324	3	84.326289			
100000046	6324	4	80.727345			
100000046	6324	5	160.269189			
100000046	6324	6	62.991048			
100000046	6324	7	75.505592			
100000046	6324	8	62.819101			
100000046	6324	9	53.434908			
100000046	6324	10	121.338923			
100000046	6518	1	33.182434	BROAD RIVER RD	SE	BUSH RIVER RD, BROAD RIVER RD & ELM ABODE TER
100000046	6518	2	35.586323			
100000046	6518	3	36.658243			
100000046	6518	4	35.689553			
100000046	6518	5	40.232309			
100000046	6518	6	35.55433			
100000046	6518	7	31.730771			
100000046	6518	8	29.241537			
100000046	6518	9	45.198134			
100000046	6518	10	37.813398			
100000049	6318	1	24.386802	LOST CREEK DR	S	LOST CREEK DR, BROAD RIVER RD & PINEY WOODS RD
100000049	6318	2	25.61083			
100000049	6318	3	23.784662			
100000049	6318	4	23.072507			
100000049	6318	5	23.894055			
100000049	6318	6	24.610026			
100000049	6318	7	23.304556			
100000049	6318	8	25.480734			
100000049	6318	9	21.053574			
100000049	6318	10	26.829837			
100000049	6319	1	20.86838	PINEY WOODS RD	N	LOST CREEK DR, BROAD RIVER RD & PINEY WOODS RD
100000049	6319	2	22.59725			

Node	Superlink	Run	Average Control Delay	Approach Street Name	Direction	Intersection
100000049	6319	3	22.376917			
100000049	6319	4	22.493455			
100000049	6319	5	25.067741			
100000049	6319	6	22.231443			
100000049	6319	7	25.464006			
100000049	6319	8	25.81553			
100000049	6319	9	20.661994			
100000049	6319	10	23.840463			
100000049	6320	1	12.041079	BROAD RIVER RD	SE	LOST CREEK DR, BROAD RIVER RD & PINEY WOODS RD
100000049	6320	2	15.189398			
100000049	6320	3	9.243583			
100000049	6320	4	17.735609			
100000049	6320	5	14.85271			
100000049	6320	6	13.927634			
100000049	6320	7	12.163545			
100000049	6320	8	10.047371			
100000049	6320	9	15.993869			
100000049	6320	10	14.613512			
100000049	6322	1	7.127136	BROAD RIVER RD	NW	LOST CREEK DR, BROAD RIVER RD & PINEY WOODS RD
100000049	6322	2	9.83579			
100000049	6322	3	8.605947			
100000049	6322	4	9.252243			
100000049	6322	5	10.99132			
100000049	6322	6	8.965846			
100000049	6322	7	8.293993			
100000049	6322	8	9.590722			
100000049	6322	9	9.350423			
100000049	6322	10	8.989614			
100000068	6321	1	17.436794	PINEY GROVE RD	E	BROAD RIVER RD & PINEY GROVE RD
100000068	6321	2	16.796044			
100000068	6321	3	18.369756			
100000068	6321	4	18.32827			
100000068	6321	5	16.129478			
100000068	6321	6	18.851661			
100000068	6321	7	17.188665			
100000068	6321	8	18.258849			
100000068	6321	9	16.471406			
100000068	6321	10	16.479598			
100000068	6322	1	2.045794	BROAD RIVER RD	SE	BROAD RIVER RD & PINEY GROVE RD
100000068	6322	2	2.825655			
100000068	6322	3	2.616391			
100000068	6322	4	2.778181			
100000068	6322	5	1.702285			
100000068	6322	6	1.81522			
100000068	6322	7	1.302289			
100000068	6322	8	1.798653			
100000068	6322	9	1.965836			
100000068	6322	10	1.941085			
100000068	6357	1	3.063594	BROAD RIVER RD	NW	BROAD RIVER RD & PINEY GROVE RD
100000068	6357	2	3.991123			
100000068	6357	3	3.239382			
100000068	6357	4	2.76388			
100000068	6357	5	4.122393			
100000068	6357	6	3.281375			
100000068	6357	7	2.544364			
100000068	6357	8	3.366165			
100000068	6357	9	3.335959			
100000068	6357	10	2.538459			
100000085	6325	1	0.121995	BROAD RIVER RD	E	BROAD RIVER RD, RIVERHILL CIR & RT
100000085	6325	2	0.089106			
100000085	6325	3	0.106646			
100000085	6325	4	0.076256			
100000085	6325	5	0.162408			
100000085	6325	6	0.096045			
100000085	6325	7	0.090906			
100000085	6325	8	0.165302			
100000085	6325	9	0.082307			
100000085	6325	10	0.099667			
100000085	6329	1	4.253146	RT	E	BROAD RIVER RD, RIVERHILL CIR & RT
100000085	6329	2	4.065518			
100000085	6329	3	3.719638			
100000085	6329	4	4.135828			
100000085	6329	5	3.783994			
100000085	6329	6	4.108101			
100000085	6329	7	3.481939			
100000085	6329	8	5.164123			
100000085	6329	9	4.175616			
100000085	6329	10	4.732218			
100000085	6330	1	4.049441	BROAD RIVER RD	W	BROAD RIVER RD, RIVERHILL CIR & RT
100000085	6330	2	9.632386			
100000085	6330	3	5.857083			
100000085	6330	4	4.876			
100000085	6330	5	5.607557			
100000085	6330	6	6.949703			
100000085	6330	7	8.586461			
100000085	6330	8	4.282661			
100000085	6330	9	4.482105			
100000085	6330	10	4.804486			
100000085	6331	1	13.947728	RIVERHILL CIR	W	BROAD RIVER RD, RIVERHILL CIR & RT
100000085	6331	2	15.70359			
100000085	6331	3	14.035262			
100000085	6331	4	12.380695			
100000085	6331	5	15.038005			
100000085	6331	6	18.708318			
100000085	6331	7	15.925032			
100000085	6331	8	12.635225			
100000085	6331	9	10.017757			
100000085	6331	10	11.472937			
100000093	4299	1	51.850933	RAMP	SW	SUNSET BLVD & RAMP
100000093	4299	2	57.073616			
100000093	4299	3	51.959546			
100000093	4299	4	52.611909			
100000093	4299	5	51.937759			
100000093	4299	6	51.78408			
100000093	4299	7	57.715934			
100000093	4299	8	52.323138			
100000093	4299	9	51.488502			
100000093	4299	10	52.855818			
100000093	4949	1	28.593742	SUNSET BLVD	E	SUNSET BLVD & RAMP
100000093	4949	2	33.432333			
100000093	4949	3	34.760791			
100000093	4949	4	38.703178			

Node	Superlink	Run	Average Control Delay	Approach Street Name	Direction	Intersection
100000093	4949	5	34.58654			
100000093	4949	6	32.968771			
100000093	4949	7	35.633413			
100000093	4949	8	37.938144			
100000093	4949	9	38.013911			
100000093	4949	10	36.692985			
100000093	4950	1	0.191091	SUNSET BLVD	W	SUNSET BLVD & RAMP
100000093	4950	2	0.15533			
100000093	4950	3	0.091051			
100000093	4950	4	0.125973			
100000093	4950	5	0.052402			
100000093	4950	6	0.125038			
100000093	4950	7	0.123082			
100000093	4950	8	0.098293			
100000093	4950	9	0.087947			
100000093	4950	10	0.208003			
100000120	5031	1	9.208789	SUNSET BLVD	W	CORLEY MILL RD, SUNSET BLVD & GINNY LN
100000120	5031	2	8.788304			
100000120	5031	3	8.757867			
100000120	5031	4	9.209688			
100000120	5031	5	9.125887			
100000120	5031	6	9.86484			
100000120	5031	7	9.390151			
100000120	5031	8	8.781197			
100000120	5031	9	8.94935			
100000120	5031	10	9.718955			
100000120	5352	1	14.913957	CORLEY MILL RD	S	CORLEY MILL RD, SUNSET BLVD & GINNY LN
100000120	5352	2	14.191869			
100000120	5352	3	13.741563			
100000120	5352	4	14.207093			
100000120	5352	5	14.022029			
100000120	5352	6	13.943988			
100000120	5352	7	13.69461			
100000120	5352	8	14.372509			
100000120	5352	9	13.406544			
100000120	5352	10	14.353581			
100000120	5353	1	34.921715	GINNY LN	N	CORLEY MILL RD, SUNSET BLVD & GINNY LN
100000120	5353	2	39.293372			
100000120	5353	3	35.514754			
100000120	5353	4	34.023144			
100000120	5353	5	41.412343			
100000120	5353	6	30.873086			
100000120	5353	7	33.176141			
100000120	5353	8	33.050581			
100000120	5353	9	32.917836			
100000120	5353	10	37.298378			
100000120	5355	1	28.941985	SUNSET BLVD	E	CORLEY MILL RD, SUNSET BLVD & GINNY LN
100000120	5355	2	32.484061			
100000120	5355	3	28.841675			
100000120	5355	4	30.826894			
100000120	5355	5	30.301401			
100000120	5355	6	30.091243			
100000120	5355	7	31.390904			
100000120	5355	8	28.728745			
100000120	5355	9	29.698258			
100000120	5355	10	33.087562			
100000134	2048	1	23.463003	RAMP	SW	SUNSET BLVD & RAMP
100000134	2048	2	22.773041			
100000134	2048	3	21.404796			
100000134	2048	4	22.43772			
100000134	2048	5	20.840285			
100000134	2048	6	22.65623			
100000134	2048	7	23.511966			
100000134	2048	8	23.772357			
100000134	2048	9	23.205255			
100000134	2048	10	22.804558			
100000134	5027	1	6.626973	SUNSET BLVD	NW	SUNSET BLVD & RAMP
100000134	5027	2	5.433927			
100000134	5027	3	7.135615			
100000134	5027	4	7.087149			
100000134	5027	5	5.966027			
100000134	5027	6	6.241781			
100000134	5027	7	4.895853			
100000134	5027	8	5.652461			
100000134	5027	9	6.309017			
100000134	5027	10	6.802806			
100000134	5030	1	4.290897	SUNSET BLVD	SE	SUNSET BLVD & RAMP
100000134	5030	2	4.799644			
100000134	5030	3	5.160486			
100000134	5030	4	5.022245			
100000134	5030	5	4.931049			
100000134	5030	6	4.65277			
100000134	5030	7	4.710022			
100000134	5030	8	4.889698			
100000134	5030	9	5.090002			
100000134	5030	10	5.077119			
100000135	2039	1	10.642482	I-20 EB OFF-RAMP	NE	SUNSET BLVD & I-20 EB OFF-RAMP
100000135	2039	2	10.607467			
100000135	2039	3	10.971726			
100000135	2039	4	11.110682			
100000135	2039	5	11.532326			
100000135	2039	6	12.988392			
100000135	2039	7	11.651362			
100000135	2039	8	11.45954			
100000135	2039	9	12.464511			
100000135	2039	10	10.1231			
100000135	5022	1	3.729022	SUNSET BLVD	SE	SUNSET BLVD & I-20 EB OFF-RAMP
100000135	5022	2	3.540949			
100000135	5022	3	3.595898			
100000135	5022	4	3.571382			
100000135	5022	5	4.62313			
100000135	5022	6	4.294809			
100000135	5022	7	3.807931			
100000135	5022	8	3.269176			
100000135	5022	9	4.176783			
100000135	5022	10	3.604843			
100000135	5023	1	3.830156	SUNSET BLVD	NW	SUNSET BLVD & I-20 EB OFF-RAMP
100000135	5023	2	4.132863			
100000135	5023	3	3.806933			
100000135	5023	4	3.879014			
100000135	5023	5	4.492947			
100000135	5023	6	4.981802			

Node	Superlink	Run	Average Control Delay	Approach Street Name	Direction	Intersection
100000135	5023	7	4.21619			
100000135	5023	8	3.747862			
100000135	5023	9	4.393439			
100000135	5023	10	4.132954			
100000136	5021	1	17.534165	SUNSET BLVD	SE	SUNSET BLVD, CROMER RD & DAVEGA DR
100000136	5021	2	18.081674			
100000136	5021	3	19.836188			
100000136	5021	4	19.879316			
100000136	5021	5	17.471767			
100000136	5021	6	18.788021			
100000136	5021	7	19.901195			
100000136	5021	8	19.205809			
100000136	5021	9	19.906794			
100000136	5021	10	16.729753			
100000136	5362	1	27.218749	CROMER RD	NE	SUNSET BLVD, CROMER RD & DAVEGA DR
100000136	5362	2	27.43458			
100000136	5362	3	27.660709			
100000136	5362	4	29.808314			
100000136	5362	5	30.464406			
100000136	5362	6	29.299853			
100000136	5362	7	29.313849			
100000136	5362	8	29.751591			
100000136	5362	9	31.757106			
100000136	5362	10	30.753359			
100000136	5364	1	78.828322	SUNSET BLVD	NW	SUNSET BLVD, CROMER RD & DAVEGA DR
100000136	5364	2	90.731466			
100000136	5364	3	77.382726			
100000136	5364	4	89.592284			
100000136	5364	5	88.901864			
100000136	5364	6	92.488708			
100000136	5364	7	89.948391			
100000136	5364	8	88.523555			
100000136	5364	9	80.837638			
100000136	5364	10	84.560631			
100000136	6459	1	22.719301	DAVEGA DR	SW	SUNSET BLVD, CROMER RD & DAVEGA DR
100000136	6459	2	24.299833			
100000136	6459	3	26.679699			
100000136	6459	4	23.366231			
100000136	6459	5	25.117215			
100000136	6459	6	23.930409			
100000136	6459	7	24.912668			
100000136	6459	8	22.590092			
100000136	6459	9	24.300181			
100000136	6459	10	27.856073			
100000138	2052	1	0	RAMP	NW	RAMP, SUNSET BLVD & I-20 EXIT 61 WB ON RAMP
100000138	2052	2	0			
100000138	2052	3	0			
100000138	2052	4	0			
100000138	2052	5	0			
100000138	2052	6	0			
100000138	2052	7	0			
100000138	2052	8	0			
100000138	2052	9	0			
100000138	2052	10	0			
100000138	5030	1	0	SUNSET BLVD	NW	RAMP, SUNSET BLVD & I-20 EXIT 61 WB ON RAMP
100000138	5030	2	0			
100000138	5030	3	0			
100000138	5030	4	0			
100000138	5030	5	0			
100000138	5030	6	0			
100000138	5030	7	0			
100000138	5030	8	0			
100000138	5030	9	0			
100000138	5030	10	0			
100000138	6553	1	4.127313	SUNSET BLVD	SE	RAMP, SUNSET BLVD & I-20 EXIT 61 WB ON RAMP
100000138	6553	2	5.199538			
100000138	6553	3	5.610676			
100000138	6553	4	5.122306			
100000138	6553	5	4.7651			
100000138	6553	6	4.972315			
100000138	6553	7	4.43457			
100000138	6553	8	5.268406			
100000138	6553	9	5.701508			
100000138	6553	10	5.568192			
100000139	2065	1	28.000306	RAMP	S	RAMP & BUSH RIVER RD
100000139	2065	2	27.036902			
100000139	2065	3	26.069295			
100000139	2065	4	28.457887			
100000139	2065	5	23.109255			
100000139	2065	6	25.007131			
100000139	2065	7	22.630052			
100000139	2065	8	22.416276			
100000139	2065	9	24.590864			
100000139	2065	10	24.68154			
100000139	5033	1	5.176931	BUSH RIVER RD	NW	RAMP & BUSH RIVER RD
100000139	5033	2	4.549673			
100000139	5033	3	4.762133			
100000139	5033	4	5.928422			
100000139	5033	5	4.896998			
100000139	5033	6	4.327245			
100000139	5033	7	4.992489			
100000139	5033	8	4.007361			
100000139	5033	9	4.749057			
100000139	5033	10	5.108223			
100000139	5034	1	6.168335	BUSH RIVER RD	SE	RAMP & BUSH RIVER RD
100000139	5034	2	6.05127			
100000139	5034	3	6.048844			
100000139	5034	4	5.658916			
100000139	5034	5	6.793748			
100000139	5034	6	6.306492			
100000139	5034	7	6.016888			
100000139	5034	8	5.909928			
100000139	5034	9	6.220486			
100000139	5034	10	6.124181			
100000140	5376	1	4.193444	SUNSET BLVD	W	SUMMER PLACE DR, SUNSET BLVD & FAIRLANE DR
100000140	5376	2	4.1268			
100000140	5376	3	4.93493			
100000140	5376	4	6.605225			
100000140	5376	5	3.584026			
100000140	5376	6	3.089073			
100000140	5376	7	3.727523			
100000140	5376	8	6.700674			

Node	Superlink	Run	Average Control Delay	Approach Street Name	Direction	Intersection
100000140	5376	9	3.857914			
100000140	5376	10	2.979738			
100000140	5378	1	40.174052	SUMMER PLACE DR	N	SUMMER PLACE DR, SUNSET BLVD & FAIRLANE DR
100000140	5378	2	33.635265			
100000140	5378	3	37.31805			
100000140	5378	4	38.733213			
100000140	5378	5	36.809248			
100000140	5378	6	35.529796			
100000140	5378	7	38.349997			
100000140	5378	8	40.613359			
100000140	5378	9	36.843193			
100000140	5378	10	35.265207			
100000140	6489	1		FAIRLANE DR	S	SUMMER PLACE DR, SUNSET BLVD & FAIRLANE DR
100000140	6489	2				
100000140	6489	3				
100000140	6489	4				
100000140	6489	5				
100000140	6489	6				
100000140	6489	7				
100000140	6489	8				
100000140	6489	9				
100000140	6489	10				
100000140	6764	1	5.129883	SUNSET BLVD	E	SUMMER PLACE DR, SUNSET BLVD & FAIRLANE DR
100000140	6764	2	5.291851			
100000140	6764	3	6.176335			
100000140	6764	4	4.998063			
100000140	6764	5	4.8728			
100000140	6764	6	4.760395			
100000140	6764	7	5.314791			
100000140	6764	8	5.104518			
100000140	6764	9	5.012516			
100000140	6764	10	4.745966			
100000142	2053	1	11.766385	RAMP	NE	BUSH RIVER RD & RAMP
100000142	2053	2	10.966819			
100000142	2053	3	9.64797			
100000142	2053	4	11.157578			
100000142	2053	5	9.083495			
100000142	2053	6	11.885311			
100000142	2053	7	11.430365			
100000142	2053	8	9.312782			
100000142	2053	9	10.260485			
100000142	2053	10	10.519428			
100000142	5036	1	11.37856	BUSH RIVER RD	SE	BUSH RIVER RD & RAMP
100000142	5036	2	12.012456			
100000142	5036	3	13.564212			
100000142	5036	4	11.447228			
100000142	5036	5	13.849129			
100000142	5036	6	12.49332			
100000142	5036	7	11.096949			
100000142	5036	8	13.827534			
100000142	5036	9	12.930406			
100000142	5036	10	11.405926			
100000142	5037	1	5.126983	BUSH RIVER RD	NW	BUSH RIVER RD & RAMP
100000142	5037	2	5.461812			
100000142	5037	3	5.444869			
100000142	5037	4	4.813564			
100000142	5037	5	6.045885			
100000142	5037	6	5.193446			
100000142	5037	7	4.859867			
100000142	5037	8	5.732697			
100000142	5037	9	5.321601			
100000142	5037	10	4.739224			
100000143	5372	1	0	SUNSET BLVD	E	SUNSET BLVD & HEBRON DR
100000143	5372	2	0			
100000143	5372	3	0			
100000143	5372	4	0			
100000143	5372	5	0			
100000143	5372	6	0			
100000143	5372	7	0			
100000143	5372	8	0			
100000143	5372	9	0			
100000143	5372	10	0			
100000143	6763	1		HEBRON DR	N	SUNSET BLVD & HEBRON DR
100000143	6763	2				
100000143	6763	3				
100000143	6763	4				
100000143	6763	5				
100000143	6763	6				
100000143	6763	7				
100000143	6763	8				
100000143	6763	9				
100000143	6763	10				
100000143	6764	1	0	SUNSET BLVD	W	SUNSET BLVD & HEBRON DR
100000143	6764	2	0			
100000143	6764	3	0			
100000143	6764	4	0			
100000143	6764	5	0			
100000143	6764	6	0			
100000143	6764	7	0			
100000143	6764	8	0			
100000143	6764	9	0			
100000143	6764	10	0			
100000144	5376	1	9.215305	SUNSET BLVD	E	SUNSET BLVD, W. HOSPTIAL DR & SUNSET CT
100000144	5376	2	10.402239			
100000144	5376	3	9.670768			
100000144	5376	4	9.04982			
100000144	5376	5	10.067212			
100000144	5376	6	11.871584			
100000144	5376	7	11.948457			
100000144	5376	8	10.694437			
100000144	5376	9	8.280552			
100000144	5376	10	11.104505			
100000144	6760	1	60.467865	W. HOSPTIAL DR	S	SUNSET BLVD, W. HOSPTIAL DR & SUNSET CT
100000144	6760	2	68.123478			
100000144	6760	3	58.68913			
100000144	6760	4	56.948225			
100000144	6760	5	50.25436			
100000144	6760	6	57.23545			
100000144	6760	7	61.836971			
100000144	6760	8	56.02983			
100000144	6760	9	51.655208			
100000144	6760	10	64.54224			

Node	Superlink	Run	Average Control Delay	Approach Street Name	Direction	Intersection
100000144	6761	1		SUNSET CT	N	SUNSET BLVD, W. HOSPTIAL DR & SUNSET CT
100000144	6761	2				
100000144	6761	3				
100000144	6761	4				
100000144	6761	5				
100000144	6761	6				
100000144	6761	7				
100000144	6761	8				
100000144	6761	9				
100000144	6761	10				
100000144	6762	1	9.721619	SUNSET BLVD	W	SUNSET BLVD, W. HOSPTIAL DR & SUNSET CT
100000144	6762	2	9.842754			
100000144	6762	3	10.659471			
100000144	6762	4	10.506738			
100000144	6762	5	11.19394			
100000144	6762	6	9.097589			
100000144	6762	7	10.185542			
100000144	6762	8	8.944825			
100000144	6762	9	9.922236			
100000144	6762	10	9.18764			
100000150	3361	1	17.837135	I-26 EXIT 101 EB OFF RAMP	SW	I-26 EXIT 101 EB OFF RAMP & BROAD RIVER RD
100000150	3361	2	13.909552			
100000150	3361	3	13.166991			
100000150	3361	4	16.464015			
100000150	3361	5	17.125548			
100000150	3361	6	23.834711			
100000150	3361	7	17.046154			
100000150	3361	8	14.295034			
100000150	3361	9	15.257587			
100000150	3361	10	14.987627			
100000150	5071	1	0	BROAD RIVER RD	E	I-26 EXIT 101 EB OFF RAMP & BROAD RIVER RD
100000150	5071	2	0			
100000150	5071	3	0			
100000150	5071	4	0			
100000150	5071	5	0			
100000150	5071	6	0			
100000150	5071	7	0			
100000150	5071	8	0			
100000150	5071	9	0			
100000150	5071	10	0			
100000150	5073	1	0.075646	BROAD RIVER RD	W	I-26 EXIT 101 EB OFF RAMP & BROAD RIVER RD
100000150	5073	2	0.069208			
100000150	5073	3	0.075487			
100000150	5073	4	0.068191			
100000150	5073	5	0.063017			
100000150	5073	6	0.065282			
100000150	5073	7	0.060697			
100000150	5073	8	0.089244			
100000150	5073	9	0.08632			
100000150	5073	10	0.071608			
100000151	5072	1	1.358092	BROAD RIVER RD	E	BROAD RIVER RD & ON-RAMP from WB
100000151	5072	2	2.265061			
100000151	5072	3	2.458167			
100000151	5072	4	2.040028			
100000151	5072	5	1.640884			
100000151	5072	6	1.996026			
100000151	5072	7	1.96625			
100000151	5072	8	1.543348			
100000151	5072	9	2.042873			
100000151	5072	10	2.237601			
100000151	5075	1	1.272481	BROAD RIVER RD	W	BROAD RIVER RD & ON-RAMP from WB
100000151	5075	2	1.311891			
100000151	5075	3	1.830721			
100000151	5075	4	1.234071			
100000151	5075	5	1.341093			
100000151	5075	6	1.336401			
100000151	5075	7	1.328967			
100000151	5075	8	1.355249			
100000151	5075	9	1.479295			
100000151	5075	10	1.253224			
100000155	6084	1	4.688187	BROAD RIVER RD	N	BEATTY RD & BROAD RIVER RD
100000155	6084	2	4.085474			
100000155	6084	3	4.640462			
100000155	6084	4	5.220302			
100000155	6084	5	4.233984			
100000155	6084	6	4.406239			
100000155	6084	7	4.127441			
100000155	6084	8	4.377153			
100000155	6084	9	4.176843			
100000155	6084	10	4.059717			
100000155	6355	1	24.057964	BEATTY RD	E	BEATTY RD & BROAD RIVER RD
100000155	6355	2	20.384557			
100000155	6355	3	30.904026			
100000155	6355	4	35.252345			
100000155	6355	5	25.278909			
100000155	6355	6	29.206066			
100000155	6355	7	28.461986			
100000155	6355	8	27.406086			
100000155	6355	9	31.525006			
100000155	6355	10	24.98014			
100000155	6357	1	11.060897	BROAD RIVER RD	S	BEATTY RD & BROAD RIVER RD
100000155	6357	2	9.162273			
100000155	6357	3	11.549049			
100000155	6357	4	10.665728			
100000155	6357	5	8.620324			
100000155	6357	6	9.854417			
100000155	6357	7	12.33952			
100000155	6357	8	11.731848			
100000155	6357	9	9.996138			
100000155	6357	10	10.690782			
100000163	4947	1	4.663587	SUNSET BLVD	E	MCSWAIN DR, SUNSET BLVD & CHRIS DR
100000163	4947	2	4.401247			
100000163	4947	3	3.987252			
100000163	4947	4	4.214276			
100000163	4947	5	3.749525			
100000163	4947	6	3.776933			
100000163	4947	7	4.85254			
100000163	4947	8	4.420575			
100000163	4947	9	4.223234			
100000163	4947	10	3.400477			
100000163	5388	1	7.235411	SUNSET BLVD	W	MCSWAIN DR, SUNSET BLVD & CHRIS DR
100000163	5388	2	6.814116			

Node	Superlink	Run	Average Control Delay	Approach Street Name	Direction	Intersection
100000163	5388	3	6.674849			
100000163	5388	4	6.280277			
100000163	5388	5	5.798161			
100000163	5388	6	6.679964			
100000163	5388	7	6.946307			
100000163	5388	8	6.467475			
100000163	5388	9	5.832623			
100000163	5388	10	5.824853			
100000163	5389	1	23.825658	MCSWAIN DR	S	MCSWAIN DR, SUNSET BLVD & CHRIS DR
100000163	5389	2	23.424775			
100000163	5389	3	22.059584			
100000163	5389	4	24.462577			
100000163	5389	5	23.166694			
100000163	5389	6	26.249967			
100000163	5389	7	27.201481			
100000163	5389	8	23.557952			
100000163	5389	9	24.90485			
100000163	5389	10	19.608384			
100000163	5418	1	64.117112	CHRIS DR	N	MCSWAIN DR, SUNSET BLVD & CHRIS DR
100000163	5418	2	69.869684			
100000163	5418	3	64.135145			
100000163	5418	4	61.741668			
100000163	5418	5	68.120776			
100000163	5418	6	60.648676			
100000163	5418	7	60.907777			
100000163	5418	8	58.811853			
100000163	5418	9	59.282849			
100000163	5418	10	59.318672			
100000164	3354	1	0	I-26 EXIT 102 EB OFF RAMP	W	LAKE MURRAY BLVD & I-26 EXIT 102 EB OFF RAMP
100000164	3354	2	0			
100000164	3354	3	0			
100000164	3354	4	0			
100000164	3354	5	0			
100000164	3354	6	0			
100000164	3354	7	0			
100000164	3354	8	0			
100000164	3354	9	0			
100000164	3354	10	0			
100000164	5084	1	0	LAKE MURRAY BLVD	E	LAKE MURRAY BLVD & I-26 EXIT 102 EB OFF RAMP
100000164	5084	2	0			
100000164	5084	3	0			
100000164	5084	4	0			
100000164	5084	5	0			
100000164	5084	6	0			
100000164	5084	7	0			
100000164	5084	8	0			
100000164	5084	9	0			
100000164	5084	10	0			
100000164	5085	1	0	LAKE MURRAY BLVD	W	LAKE MURRAY BLVD & I-26 EXIT 102 EB OFF RAMP
100000164	5085	2	0			
100000164	5085	3	0			
100000164	5085	4	0			
100000164	5085	5	0			
100000164	5085	6	0			
100000164	5085	7	0			
100000164	5085	8	0			
100000164	5085	9	0			
100000164	5085	10	0			
100000165	3330	1	50.552905	EXIT 103 WB OFF RAMP	SE	HARBISON BLVD, EXIT 103 WB OFF RAMP, WOODCROSS DR & EXIT 103 WB ON RAMP
100000165	3330	2	47.266352			
100000165	3330	3	50.410064			
100000165	3330	4	54.178892			
100000165	3330	5	47.992241			
100000165	3330	6	47.394325			
100000165	3330	7	45.813382			
100000165	3330	8	44.853511			
100000165	3330	9	39.576814			
100000165	3330	10	49.066097			
100000165	5096	1	13.386924	HARBISON BLVD	NE	HARBISON BLVD, EXIT 103 WB OFF RAMP, WOODCROSS DR & EXIT 103 WB ON RAMP
100000165	5096	2	12.987482			
100000165	5096	3	13.903007			
100000165	5096	4	14.311574			
100000165	5096	5	13.52017			
100000165	5096	6	16.077195			
100000165	5096	7	13.127089			
100000165	5096	8	14.191308			
100000165	5096	9	13.352518			
100000165	5096	10	14.023486			
100000165	5102	1	8.507341	HARBISON BLVD	SW	HARBISON BLVD, EXIT 103 WB OFF RAMP, WOODCROSS DR & EXIT 103 WB ON RAMP
100000165	5102	2	9.13278			
100000165	5102	3	7.386804			
100000165	5102	4	7.096761			
100000165	5102	5	6.90104			
100000165	5102	6	7.493244			
100000165	5102	7	7.404767			
100000165	5102	8	6.812409			
100000165	5102	9	7.918121			
100000165	5102	10	8.345937			
100000165	5103	1	113.834153	WOODCROSS DR	NW	HARBISON BLVD, EXIT 103 WB OFF RAMP, WOODCROSS DR & EXIT 103 WB ON RAMP
100000165	5103	2	110.641301			
100000165	5103	3	100.370354			
100000165	5103	4	122.105157			
100000165	5103	5	112.36372			
100000165	5103	6	138.646782			
100000165	5103	7	97.619861			
100000165	5103	8	129.570424			
100000165	5103	9	126.088095			
100000165	5103	10	101.330457			
100000166	3343	1	0	I-26 EXIT 102 EBL OFF RAMP	E	LAKE MURRAY BLVD & I-26 EXIT 102 EBL OFF RAMP
100000166	3343	2	0			
100000166	3343	3	0			
100000166	3343	4	0			
100000166	3343	5	0			
100000166	3343	6	0			
100000166	3343	7	0			
100000166	3343	8	0			
100000166	3343	9	0			
100000166	3343	10	0			
100000166	5087	1	0	LAKE MURRAY BLVD	E	LAKE MURRAY BLVD & I-26 EXIT 102 EBL OFF RAMP
100000166	5087	2	0			
100000166	5087	3	0			
100000166	5087	4	0			

Node	Superlink	Run	Average Control Delay	Approach Street Name	Direction	Intersection
100000166	5087	5	0			
100000166	5087	6	0			
100000166	5087	7	0			
100000166	5087	8	0			
100000166	5087	9	0			
100000166	5087	10	0			
100000166	5088	1	0	LAKE MURRAY BLVD	W	LAKE MURRAY BLVD & I-26 EXIT 102 EBL OFF RAMP
100000166	5088	2	0			
100000166	5088	3	0			
100000166	5088	4	0			
100000166	5088	5	0			
100000166	5088	6	0			
100000166	5088	7	0			
100000166	5088	8	0			
100000166	5088	9	0			
100000166	5088	10	0			
100000167	3339	1	0	I-26 EXIT 102 WBL OFF RAMP	W	I-26 EXIT 102 WBL OFF RAMP & LAKE MURRAY BLVD
100000167	3339	2	0			
100000167	3339	3	0			
100000167	3339	4	0			
100000167	3339	5	0			
100000167	3339	6	0			
100000167	3339	7	0			
100000167	3339	8	0			
100000167	3339	9	0			
100000167	3339	10	0			
100000167	5088	1	0	LAKE MURRAY BLVD	E	I-26 EXIT 102 WBL OFF RAMP & LAKE MURRAY BLVD
100000167	5088	2	0			
100000167	5088	3	0			
100000167	5088	4	0			
100000167	5088	5	0			
100000167	5088	6	0			
100000167	5088	7	0			
100000167	5088	8	0			
100000167	5088	9	0			
100000167	5088	10	0			
100000167	5090	1	0	LAKE MURRAY BLVD	W	I-26 EXIT 102 WBL OFF RAMP & LAKE MURRAY BLVD
100000167	5090	2	0			
100000167	5090	3	0			
100000167	5090	4	0			
100000167	5090	5	0			
100000167	5090	6	0			
100000167	5090	7	0			
100000167	5090	8	0			
100000167	5090	9	0			
100000167	5090	10	0			
100000168	5366	1	28.952643	LEAPHART RD	N	SUNSET BLVD & LEAPHART RD
100000168	5366	2	28.672018			
100000168	5366	3	26.094152			
100000168	5366	4	28.643885			
100000168	5366	5	35.112611			
100000168	5366	6	29.308172			
100000168	5366	7	32.898693			
100000168	5366	8	29.080206			
100000168	5366	9	27.993276			
100000168	5366	10	27.955762			
100000168	5368	1	4.743508	SUNSET BLVD	E	SUNSET BLVD & LEAPHART RD
100000168	5368	2	5.897256			
100000168	5368	3	4.943206			
100000168	5368	4	5.502223			
100000168	5368	5	4.718772			
100000168	5368	6	5.429112			
100000168	5368	7	4.201957			
100000168	5368	8	4.612372			
100000168	5368	9	5.338826			
100000168	5368	10	5.085833			
100000168	5372	1	166.333023	SUNSET BLVD	W	SUNSET BLVD & LEAPHART RD
100000168	5372	2	260.209826			
100000168	5372	3	157.007225			
100000168	5372	4	165.44334			
100000168	5372	5	186.675476			
100000168	5372	6	235.064268			
100000168	5372	7	259.012885			
100000168	5372	8	172.475861			
100000168	5372	9	156.247423			
100000168	5372	10	152.023431			
100000171	3342	1	0	I-26 EXIT 102 WB OFF RAMP	E	LAKE MURRAY BLVD & I-26 EXIT 102 WB OFF RAMP
100000171	3342	2	0			
100000171	3342	3	0			
100000171	3342	4	0			
100000171	3342	5	0			
100000171	3342	6	0			
100000171	3342	7	0			
100000171	3342	8	0			
100000171	3342	9	0			
100000171	3342	10	0			
100000171	5092	1	0.008385	LAKE MURRAY BLVD	E	LAKE MURRAY BLVD & I-26 EXIT 102 WB OFF RAMP
100000171	5092	2	0.013901			
100000171	5092	3	0.015287			
100000171	5092	4	0.011402			
100000171	5092	5	0.022184			
100000171	5092	6	0.011998			
100000171	5092	7	0.01029			
100000171	5092	8	0.012726			
100000171	5092	9	0.013361			
100000171	5092	10	0.013493			
100000171	5093	1	0	LAKE MURRAY BLVD	W	LAKE MURRAY BLVD & I-26 EXIT 102 WB OFF RAMP
100000171	5093	2	0			
100000171	5093	3	0			
100000171	5093	4	0			
100000171	5093	5	0			
100000171	5093	6	0			
100000171	5093	7	0			
100000171	5093	8	0			
100000171	5093	9	0			
100000171	5093	10	0			
100000173	3212	1	59.259891		103 SE	HARBISON BLVD, 103 & RAMP
100000173	3212	2	60.419338			
100000173	3212	3	57.910824			
100000173	3212	4	55.122705			
100000173	3212	5	57.085911			
100000173	3212	6	67.292156			

Node	Superlink	Run	Average Control Delay	Approach Street Name	Direction	Intersection
100000173	3212	7	62.246322			
100000173	3212	8	54.002458			
100000173	3212	9	58.308919			
100000173	3212	10	55.533471			
100000173	3213	1	11.318052	103	S	HARBISON BLVD, 103 & RAMP
100000173	3213	2	11.384582			
100000173	3213	3	13.972025			
100000173	3213	4	14.857586			
100000173	3213	5	11.34943			
100000173	3213	6	12.676251			
100000173	3213	7	13.333537			
100000173	3213	8	11.302747			
100000173	3213	9	12.815434			
100000173	3213	10	12.913481			
100000173	5097	1	2.968892	HARBISON BLVD	NE	HARBISON BLVD, 103 & RAMP
100000173	5097	2	2.947197			
100000173	5097	3	2.477099			
100000173	5097	4	3.385537			
100000173	5097	5	2.860154			
100000173	5097	6	2.921532			
100000173	5097	7	3.197584			
100000173	5097	8	2.542861			
100000173	5097	9	3.292717			
100000173	5097	10	3.144401			
100000173	5099	1	7.610471	HARBISON BLVD	SW	HARBISON BLVD, 103 & RAMP
100000173	5099	2	7.547555			
100000173	5099	3	7.288197			
100000173	5099	4	7.054546			
100000173	5099	5	7.878173			
100000173	5099	6	6.642417			
100000173	5099	7	7.508997			
100000173	5099	8	7.525734			
100000173	5099	9	6.845446			
100000173	5099	10	7.768576			
100000175	3234	1	64.226016	RAMP	SE	PINEY GROVE RD & RAMP
100000175	3234	2	65.228192			
100000175	3234	3	59.426375			
100000175	3234	4	56.173147			
100000175	3234	5	67.459776			
100000175	3234	6	65.833119			
100000175	3234	7	70.724981			
100000175	3234	8	56.416549			
100000175	3234	9	73.308629			
100000175	3234	10	61.151284			
100000175	5112	1	1.629572	PINEY GROVE RD	W	PINEY GROVE RD & RAMP
100000175	5112	2	1.321776			
100000175	5112	3	1.104101			
100000175	5112	4	1.180128			
100000175	5112	5	1.433918			
100000175	5112	6	1.483891			
100000175	5112	7	1.45105			
100000175	5112	8	0.985707			
100000175	5112	9	1.168871			
100000175	5112	10	1.565119			
100000175	6544	1	3.636888	PINEY GROVE RD	E	PINEY GROVE RD & RAMP
100000175	6544	2	3.26457			
100000175	6544	3	3.498878			
100000175	6544	4	3.312299			
100000175	6544	5	3.625586			
100000175	6544	6	2.977196			
100000175	6544	7	3.620729			
100000175	6544	8	3.138094			
100000175	6544	9	2.980047			
100000175	6544	10	3.59841			
100000177	5112	1	8.509866	PINEY GROVE RD	E	PINEY GROVE RD, EXIT 104 WB OFF RAMP & EXIT 104 WB ON RAMP
100000177	5112	2	9.237273			
100000177	5112	3	8.53847			
100000177	5112	4	11.162622			
100000177	5112	5	10.941126			
100000177	5112	6	8.282014			
100000177	5112	7	9.943272			
100000177	5112	8	9.656514			
100000177	5112	9	10.88343			
100000177	5112	10	9.316575			
100000177	5113	1	11.245271	PINEY GROVE RD	W	PINEY GROVE RD, EXIT 104 WB OFF RAMP & EXIT 104 WB ON RAMP
100000177	5113	2	12.333281			
100000177	5113	3	11.554285			
100000177	5113	4	12.338411			
100000177	5113	5	10.598659			
100000177	5113	6	10.822704			
100000177	5113	7	11.635049			
100000177	5113	8	11.140518			
100000177	5113	9	11.312037			
100000177	5113	10	11.026534			
100000177	6513	1	5.961565	EXIT 104 WB OFF RAMP	N	PINEY GROVE RD, EXIT 104 WB OFF RAMP & EXIT 104 WB ON RAMP
100000177	6513	2	5.384479			
100000177	6513	3	6.099735			
100000177	6513	4	5.894695			
100000177	6513	5	6.003638			
100000177	6513	6	6.235908			
100000177	6513	7	6.084956			
100000177	6513	8	6.309259			
100000177	6513	9	5.573565			
100000177	6513	10	5.912541			
100000177	6514	1	27.056066	EXIT 104 WB OFF RAMP	N	PINEY GROVE RD, EXIT 104 WB OFF RAMP & EXIT 104 WB ON RAMP
100000177	6514	2	25.852869			
100000177	6514	3	25.093463			
100000177	6514	4	27.910737			
100000177	6514	5	29.835111			
100000177	6514	6	30.886797			
100000177	6514	7	30.682256			
100000177	6514	8	27.052676			
100000177	6514	9	29.383531			
100000177	6514	10	28.176204			
100000178	3301	1	22.276372	RAMP	SE	ST ANDREWS RD, RAMP, WOODLAND HILLS RD & I-26 EXIT 106 EB ON RAMP
100000178	3301	2	26.266952			
100000178	3301	3	25.278677			
100000178	3301	4	23.681194			
100000178	3301	5	24.758064			
100000178	3301	6	25.514169			
100000178	3301	7	23.918592			
100000178	3301	8	24.403523			

Node	Superlink	Run	Average Control Delay	Approach Street Name	Direction	Intersection
100000178	3301	9	25.561994			
100000178	3301	10	24.672333			
100000178	5118	1	6.228581	ST ANDREWS RD	E	ST ANDREWS RD, RAMP, WOODLAND HILLS RD & I-26 EXIT 106 EB ON RAMP
100000178	5118	2	6.035811			
100000178	5118	3	6.0269			
100000178	5118	4	5.648393			
100000178	5118	5	6.163729			
100000178	5118	6	5.906761			
100000178	5118	7	5.83371			
100000178	5118	8	6.013057			
100000178	5118	9	5.726965			
100000178	5118	10	5.959349			
100000178	5119	1	23.210175	WOODLAND HILLS RD	N	ST ANDREWS RD, RAMP, WOODLAND HILLS RD & I-26 EXIT 106 EB ON RAMP
100000178	5119	2	22.612226			
100000178	5119	3	21.394888			
100000178	5119	4	23.339984			
100000178	5119	5	20.798166			
100000178	5119	6	24.463846			
100000178	5119	7	19.037937			
100000178	5119	8	20.521541			
100000178	5119	9	19.658027			
100000178	5119	10	24.113634			
100000178	5120	1	8.108388	ST ANDREWS RD	W	ST ANDREWS RD, RAMP, WOODLAND HILLS RD & I-26 EXIT 106 EB ON RAMP
100000178	5120	2	8.987533			
100000178	5120	3	8.073329			
100000178	5120	4	7.834388			
100000178	5120	5	7.982396			
100000178	5120	6	8.637479			
100000178	5120	7	7.816768			
100000178	5120	8	9.297396			
100000178	5120	9	8.510584			
100000178	5120	10	8.037955			
100000179	3219	1	0	RAMP	S	ST ANDREWS RD & RAMP
100000179	3219	2	0			
100000179	3219	3	0			
100000179	3219	4	0			
100000179	3219	5	0			
100000179	3219	6	0			
100000179	3219	7	0			
100000179	3219	8	0			
100000179	3219	9	0			
100000179	3219	10	0			
100000179	5116	1	12.676817	ST ANDREWS RD	E	ST ANDREWS RD & RAMP
100000179	5116	2	10.951523			
100000179	5116	3	11.711055			
100000179	5116	4	12.104439			
100000179	5116	5	11.085407			
100000179	5116	6	10.803882			
100000179	5116	7	12.377003			
100000179	5116	8	11.944526			
100000179	5116	9	10.395616			
100000179	5116	10	11.250283			
100000179	5118	1	0	ST ANDREWS RD	W	ST ANDREWS RD & RAMP
100000179	5118	2	0			
100000179	5118	3	0			
100000179	5118	4	0			
100000179	5118	5	0.000168			
100000179	5118	6	0.004612			
100000179	5118	7	0			
100000179	5118	8	0			
100000179	5118	9	0			
100000179	5118	10	0			
100000182	3292	1	0	EXIT 106 WB OFF RAMP	NE	ST ANDREWS RD, EXIT 106 WB OFF RAMP & EXIT 106 WB ON RAMP
100000182	3292	2	0			
100000182	3292	3	0			
100000182	3292	4	0			
100000182	3292	5	0			
100000182	3292	6	0			
100000182	3292	7	0			
100000182	3292	8	0			
100000182	3292	9	0			
100000182	3292	10	0			
100000182	5123	1	0	ST ANDREWS RD	E	ST ANDREWS RD, EXIT 106 WB OFF RAMP & EXIT 106 WB ON RAMP
100000182	5123	2	0			
100000182	5123	3	0			
100000182	5123	4	0			
100000182	5123	5	0			
100000182	5123	6	0			
100000182	5123	7	0			
100000182	5123	8	0			
100000182	5123	9	0			
100000182	5123	10	0			
100000182	5124	1	0	ST ANDREWS RD	SW	ST ANDREWS RD, EXIT 106 WB OFF RAMP & EXIT 106 WB ON RAMP
100000182	5124	2	0			
100000182	5124	3	0			
100000182	5124	4	0			
100000182	5124	5	0			
100000182	5124	6	0			
100000182	5124	7	0			
100000182	5124	8	0			
100000182	5124	9	0			
100000182	5124	10	0			
100000184	5499	1	17.024802	N ARROWWOOD RD	S	ARROWWOOD RD, BUSH RIVER RD & N ARROWWOOD RD
100000184	5499	2	18.640274			
100000184	5499	3	21.447186			
100000184	5499	4	18.055766			
100000184	5499	5	17.570745			
100000184	5499	6	18.666792			
100000184	5499	7	19.893261			
100000184	5499	8	16.854791			
100000184	5499	9	18.188571			
100000184	5499	10	15.524969			
100000184	5500	1	31.290876	ARROWWOOD RD	N	ARROWWOOD RD, BUSH RIVER RD & N ARROWWOOD RD
100000184	5500	2	34.088221			
100000184	5500	3	32.465408			
100000184	5500	4	32.036031			
100000184	5500	5	35.130345			
100000184	5500	6	30.614693			
100000184	5500	7	37.802981			
100000184	5500	8	32.261086			
100000184	5500	9	32.756686			
100000184	5500	10	29.401086			

Node	Superlink	Run	Average Control Delay	Approach Street Name	Direction	Intersection
100000184	6497	1	12.980845	BUSH RIVER RD	W	ARROWWOOD RD, BUSH RIVER RD & N ARROWWOOD RD
100000184	6497	2	13.030215			
100000184	6497	3	30.647778			
100000184	6497	4	33.310918			
100000184	6497	5	16.153535			
100000184	6497	6	16.510994			
100000184	6497	7	36.724129			
100000184	6497	8	11.638198			
100000184	6497	9	14.725602			
100000184	6497	10	12.367888			
100000184	6505	1	10.462518	BUSH RIVER RD	E	ARROWWOOD RD, BUSH RIVER RD & N ARROWWOOD RD
100000184	6505	2	10.731122			
100000184	6505	3	11.603674			
100000184	6505	4	14.93066			
100000184	6505	5	11.048265			
100000184	6505	6	11.989622			
100000184	6505	7	12.354542			
100000184	6505	8	11.719485			
100000184	6505	9	11.407108			
100000184	6505	10	10.901975			
100000185	3230	1	54.494207	RAMP	W	GREYSTONE BLVD, RAMP & I-126 EB ON RAMP FROM GREYSTONE BLVD
100000185	3230	2	39.50581			
100000185	3230	3	26.049197			
100000185	3230	4	34.705185			
100000185	3230	5	36.74498			
100000185	3230	6	44.883125			
100000185	3230	7	33.350426			
100000185	3230	8	36.515798			
100000185	3230	9	34.287878			
100000185	3230	10	44.14681			
100000185	5140	1	0.370613	GREYSTONE BLVD	N	GREYSTONE BLVD, RAMP & I-126 EB ON RAMP FROM GREYSTONE BLVD
100000185	5140	2	0.425031			
100000185	5140	3	0.500773			
100000185	5140	4	0.318815			
100000185	5140	5	0.469386			
100000185	5140	6	0.283975			
100000185	5140	7	0.344948			
100000185	5140	8	0.439093			
100000185	5140	9	0.266732			
100000185	5140	10	0.350602			
100000185	5141	1	5.296891	GREYSTONE BLVD	S	GREYSTONE BLVD, RAMP & I-126 EB ON RAMP FROM GREYSTONE BLVD
100000185	5141	2	4.152055			
100000185	5141	3	3.760586			
100000185	5141	4	4.584942			
100000185	5141	5	4.169817			
100000185	5141	6	2.847366			
100000185	5141	7	3.642279			
100000185	5141	8	3.332798			
100000185	5141	9	3.154476			
100000185	5141	10	4.252372			
100000186	4949	1	12.402727	SUNSET BLVD	W	HARBOR DR, SUNSET BLVD & E HOSPITAL DR
100000186	4949	2	13.954282			
100000186	4949	3	11.167513			
100000186	4949	4	11.836635			
100000186	4949	5	9.556775			
100000186	4949	6	11.529158			
100000186	4949	7	13.013456			
100000186	4949	8	11.355904			
100000186	4949	9	12.067799			
100000186	4949	10	13.248433			
100000186	5386	1	190.043617	HARBOR DR	N	HARBOR DR, SUNSET BLVD & E HOSPITAL DR
100000186	5386	2	255.26702			
100000186	5386	3	328.841209			
100000186	5386	4	320.978577			
100000186	5386	5	310.607557			
100000186	5386	6	329.963917			
100000186	5386	7	411.985681			
100000186	5386	8	374.93558			
100000186	5386	9	403.105867			
100000186	5386	10	378.972121			
100000186	5387	1	142.000258	E HOSPITAL DR	S	HARBOR DR, SUNSET BLVD & E HOSPITAL DR
100000186	5387	2	182.327997			
100000186	5387	3	98.758246			
100000186	5387	4	181.586669			
100000186	5387	5	81.265985			
100000186	5387	6	140.972187			
100000186	5387	7	206.283325			
100000186	5387	8	145.98293			
100000186	5387	9	217.791907			
100000186	5387	10	132.738957			
100000186	6762	1	25.353644	SUNSET BLVD	E	HARBOR DR, SUNSET BLVD & E HOSPITAL DR
100000186	6762	2	29.759436			
100000186	6762	3	24.200857			
100000186	6762	4	30.356423			
100000186	6762	5	22.453461			
100000186	6762	6	25.985593			
100000186	6762	7	32.929052			
100000186	6762	8	34.659941			
100000186	6762	9	31.04099			
100000186	6762	10	34.235344			
100000187	6057	1	87.531438	BROAD RIVER RD	NW	BROAD RIVER RD, BRIARGATE CIR & MARLEY DR
100000187	6057	2	75.136814			
100000187	6057	3	82.109058			
100000187	6057	4	83.313163			
100000187	6057	5	86.028958			
100000187	6057	6	84.644998			
100000187	6057	7	74.260724			
100000187	6057	8	69.044955			
100000187	6057	9	39.736702			
100000187	6057	10	67.175972			
100000187	6059	1	14.046412	BROAD RIVER RD	SE	BROAD RIVER RD, BRIARGATE CIR & MARLEY DR
100000187	6059	2	5.707724			
100000187	6059	3	8.821207			
100000187	6059	4	4.843569			
100000187	6059	5	3.037155			
100000187	6059	6	6.354935			
100000187	6059	7	3.932696			
100000187	6059	8	5.462261			
100000187	6059	9	3.646738			
100000187	6059	10	4.71653			
100000187	6060	1	80.960409	MARLEY DR	SW	BROAD RIVER RD, BRIARGATE CIR & MARLEY DR
100000187	6060	2	62.082584			

Node	Superlink	Run	Average Control Delay	Approach Street Name	Direction	Intersection
100000187	6060	3	61.849998			
100000187	6060	4	59.822117			
100000187	6060	5	65.486766			
100000187	6060	6	60.736604			
100000187	6060	7	56.538646			
100000187	6060	8	59.821764			
100000187	6060	9	61.186599			
100000187	6060	10	60.316979			
100000187	6061	1	36.224403	BRIARGATE CIR	NE	BROAD RIVER RD, BRIARGATE CIR & MARLEY DR
100000187	6061	2	45.028053			
100000187	6061	3	36.790537			
100000187	6061	4	35.892561			
100000187	6061	5	31.031196			
100000187	6061	6	38.639985			
100000187	6061	7	45.340545			
100000187	6061	8	38.985019			
100000187	6061	9	28.761036			
100000187	6061	10	33.87621			
100000188	3221	1	6.777478	RAMP	W	GREYSTONE BLVD & RAMP
100000188	3221	2	24.866105			
100000188	3221	3	19.409088			
100000188	3221	4	24.04798			
100000188	3221	5	14.600149			
100000188	3221	6	13.425728			
100000188	3221	7	11.115529			
100000188	3221	8	26.452775			
100000188	3221	9	20.624045			
100000188	3221	10	18.575866			
100000188	5143	1	1.382636	GREYSTONE BLVD	N	GREYSTONE BLVD & RAMP
100000188	5143	2	1.026723			
100000188	5143	3	1.476434			
100000188	5143	4	1.045668			
100000188	5143	5	0.872916			
100000188	5143	6	1.205547			
100000188	5143	7	1.300116			
100000188	5143	8	1.218419			
100000188	5143	9	1.524648			
100000188	5143	10	0.851075			
100000188	5144	1	0.002612	GREYSTONE BLVD	S	GREYSTONE BLVD & RAMP
100000188	5144	2	0.007781			
100000188	5144	3	0.005835			
100000188	5144	4	0.009553			
100000188	5144	5	0.023435			
100000188	5144	6	0.021615			
100000188	5144	7	0			
100000188	5144	8	0.009917			
100000188	5144	9	0.013819			
100000188	5144	10	0.027026			
100000189	4346	1	205.157418	I-20 EXIT 65 WB OFF RAMP	SW	I-20 EXIT 65 WB OFF RAMP, BROAD RIVER RD & RAMP
100000189	4346	2	168.719972			
100000189	4346	3	248.634956			
100000189	4346	4	319.485167			
100000189	4346	5	233.545068			
100000189	4346	6	287.488732			
100000189	4346	7	173.618825			
100000189	4346	8	152.444268			
100000189	4346	9	130.583723			
100000189	4346	10	200.100821			
100000189	6057	1	63.716486	BROAD RIVER RD	SE	I-20 EXIT 65 WB OFF RAMP, BROAD RIVER RD & RAMP
100000189	6057	2	45.693361			
100000189	6057	3	76.860941			
100000189	6057	4	52.760764			
100000189	6057	5	35.107761			
100000189	6057	6	52.99736			
100000189	6057	7	44.022503			
100000189	6057	8	50.799719			
100000189	6057	9	38.424374			
100000189	6057	10	30.567353			
100000189	6447	1	39.088709	BROAD RIVER RD	NW	I-20 EXIT 65 WB OFF RAMP, BROAD RIVER RD & RAMP
100000189	6447	2	33.523626			
100000189	6447	3	40.720772			
100000189	6447	4	27.181934			
100000189	6447	5	41.314126			
100000189	6447	6	42.618189			
100000189	6447	7	58.16006			
100000189	6447	8	32.081892			
100000189	6447	9	20.682564			
100000189	6447	10	31.290562			
100000190	4341	1	73.187921	I-20 EXIT 65 EB OFF RAMP	E	BROAD RIVER RD, I-20 EXIT 65 EB OFF RAMP & SERVICE RD
100000190	4341	2	58.189947			
100000190	4341	3	67.707081			
100000190	4341	4	42.616128			
100000190	4341	5	61.612403			
100000190	4341	6	151.870488			
100000190	4341	7	76.607185			
100000190	4341	8	71.385082			
100000190	4341	9	55.782621			
100000190	4341	10	53.865237			
100000190	5148	1	1.914198	BROAD RIVER RD	SE	BROAD RIVER RD, I-20 EXIT 65 EB OFF RAMP & SERVICE RD
100000190	5148	2	1.546223			
100000190	5148	3	1.670484			
100000190	5148	4	1.326768			
100000190	5148	5	1.455769			
100000190	5148	6	1.538226			
100000190	5148	7	1.449907			
100000190	5148	8	1.502355			
100000190	5148	9	1.594269			
100000190	5148	10	1.593652			
100000190	6445	1	5.767584	BROAD RIVER RD	NW	BROAD RIVER RD, I-20 EXIT 65 EB OFF RAMP & SERVICE RD
100000190	6445	2	5.926975			
100000190	6445	3	6.038598			
100000190	6445	4	4.95386			
100000190	6445	5	5.662756			
100000190	6445	6	5.8226			
100000190	6445	7	8.007452			
100000190	6445	8	5.872			
100000190	6445	9	5.328868			
100000190	6445	10	5.895828			
100000190	6446	1		SERVICE RD	SW	BROAD RIVER RD, I-20 EXIT 65 EB OFF RAMP & SERVICE RD
100000190	6446	2				
100000190	6446	3				
100000190	6446	4				

Node	Superlink	Run	Average Control Delay	Approach Street Name	Direction	Intersection
100000190	6446	5				
100000190	6446	6				
100000190	6446	7				
100000190	6446	8				
100000190	6446	9				
100000190	6446	10				
100000191	5399	1	0.008572	HARBOR DR	S	HARBOR DR & OAKWOOD DR
100000191	5399	2	0.06566			
100000191	5399	3	0.01744			
100000191	5399	4	0.054897			
100000191	5399	5	0.047569			
100000191	5399	6	0.047446			
100000191	5399	7	0.062068			
100000191	5399	8	0.056062			
100000191	5399	9	0			
100000191	5399	10	0.040851			
100000191	5414	1	6.488551	OAKWOOD DR	NE	HARBOR DR & OAKWOOD DR
100000191	5414	2	64.803616			
100000191	5414	3	23.196562			
100000191	5414	4	14.561382			
100000191	5414	5	59.631727			
100000191	5414	6	52.417032			
100000191	5414	7	154.765835			
100000191	5414	8	49.746552			
100000191	5414	9	106.107224			
100000191	5414	10	130.178082			
100000191	5420	1	0	HARBOR DR	N	HARBOR DR & OAKWOOD DR
100000191	5420	2	0			
100000191	5420	3	0			
100000191	5420	4	0			
100000191	5420	5	0			
100000191	5420	6	0			
100000191	5420	7	0.343089			
100000191	5420	8	0			
100000191	5420	9	0			
100000191	5420	10	0			
100000193	4350	1	22.488287	I-20 EXIT 68 EB OFF RAMP	E	BUCKNER RD, MONTICELLO RD & I-20 EXIT 68 EB OFF RAMP
100000193	4350	2	24.18631			
100000193	4350	3	24.893038			
100000193	4350	4	25.839305			
100000193	4350	5	23.320015			
100000193	4350	6	22.091			
100000193	4350	7	21.859006			
100000193	4350	8	25.105952			
100000193	4350	9	21.761214			
100000193	4350	10	25.592664			
100000193	5154	1	16.891813	MONTICELLO RD	N	BUCKNER RD, MONTICELLO RD & I-20 EXIT 68 EB OFF RAMP
100000193	5154	2	20.856816			
100000193	5154	3	17.957711			
100000193	5154	4	18.588085			
100000193	5154	5	18.328423			
100000193	5154	6	18.739731			
100000193	5154	7	18.533765			
100000193	5154	8	18.535045			
100000193	5154	9	17.035663			
100000193	5154	10	18.850355			
100000193	5155	1	21.049641	MONTICELLO RD	SE	BUCKNER RD, MONTICELLO RD & I-20 EXIT 68 EB OFF RAMP
100000193	5155	2	18.100679			
100000193	5155	3	16.907939			
100000193	5155	4	20.026114			
100000193	5155	5	17.787758			
100000193	5155	6	17.982029			
100000193	5155	7	18.323913			
100000193	5155	8	21.335804			
100000193	5155	9	16.348224			
100000193	5155	10	18.545266			
100000193	5163	1	11.760011	BUCKNER RD	SW	BUCKNER RD, MONTICELLO RD & I-20 EXIT 68 EB OFF RAMP
100000193	5163	2	9.556973			
100000193	5163	3	11.175281			
100000193	5163	4	10.930454			
100000193	5163	5	12.205027			
100000193	5163	6	10.548532			
100000193	5163	7	9.735959			
100000193	5163	8	10.807825			
100000193	5163	9	11.17119			
100000193	5163	10	10.579043			
100000195	5150	1	8.593847	BROAD RIVER RD	SE	LONGCREEK DR & BROAD RIVER RD
100000195	5150	2	5.760952			
100000195	5150	3	5.00518			
100000195	5150	4	5.233229			
100000195	5150	5	6.890893			
100000195	5150	6	7.844362			
100000195	5150	7	8.5557			
100000195	5150	8	6.758795			
100000195	5150	9	5.855057			
100000195	5150	10	5.579926			
100000195	6049	1	3.834068	BROAD RIVER RD	NW	LONGCREEK DR & BROAD RIVER RD
100000195	6049	2	3.138647			
100000195	6049	3	2.618423			
100000195	6049	4	2.611113			
100000195	6049	5	3.877401			
100000195	6049	6	3.239885			
100000195	6049	7	5.148329			
100000195	6049	8	3.49689			
100000195	6049	9	2.712281			
100000195	6049	10	3.110221			
100000195	6052	1	39.630024	LONGCREEK DR	SW	LONGCREEK DR & BROAD RIVER RD
100000195	6052	2	32.556235			
100000195	6052	3	28.239049			
100000195	6052	4	28.634437			
100000195	6052	5	35.001197			
100000195	6052	6	35.525846			
100000195	6052	7	46.715793			
100000195	6052	8	35.061102			
100000195	6052	9	29.970376			
100000195	6052	10	33.546781			
100000196	5166	1	0.965957	MONTICELLO RD	SE	SERVICE RD, MONTICELLO RD & RAMP
100000196	5166	2	1.615378			
100000196	5166	3	0.946727			
100000196	5166	4	1.070426			
100000196	5166	5	1.438613			
100000196	5166	6	1.486072			

Node	Superlink	Run	Average Control Delay	Approach Street Name	Direction	Intersection
100000196	5166	7	1.495564			
100000196	5166	8	1.397458			
100000196	5166	9	1.138394			
100000196	5166	10	1.825621			
100000196	5169	1	12.029939	SERVICE RD	SW	SERVICE RD, MONTICELLO RD & RAMP
100000196	5169	2	15.166549			
100000196	5169	3	13.815938			
100000196	5169	4	15.343251			
100000196	5169	5	15.209148			
100000196	5169	6	13.080632			
100000196	5169	7	17.187356			
100000196	5169	8	13.452293			
100000196	5169	9	10.763767			
100000196	5169	10	14.017519			
100000196	5172	1	1.111694	MONTICELLO RD	NW	SERVICE RD, MONTICELLO RD & RAMP
100000196	5172	2	1.924921			
100000196	5172	3	1.474695			
100000196	5172	4	1.213467			
100000196	5172	5	1.361255			
100000196	5172	6	1.49884			
100000196	5172	7	1.348753			
100000196	5172	8	1.315659			
100000196	5172	9	1.64609			
100000196	5172	10	1.086449			
100000198	4354	1	0	RAMP	N	RAMP & I-20 EXIT 68 EB ON RAMP
100000198	4354	2	0			
100000198	4354	3	0			
100000198	4354	4	0			
100000198	4354	5	0			
100000198	4354	6	0			
100000198	4354	7	0			
100000198	4354	8	0			
100000198	4354	9	0			
100000198	4354	10	0			
100000198	5158	1		RAMP	NW	RAMP & I-20 EXIT 68 EB ON RAMP
100000198	5158	2				
100000198	5158	3				
100000198	5158	4				
100000198	5158	5				
100000198	5158	6				
100000198	5158	7				
100000198	5158	8				
100000198	5158	9				
100000198	5158	10				
100000200	5174	1	6.684004	MONTICELLO RD	NW	MONTICELLO RD, PEEPLES ST & BLUE RIDGE TER
100000200	5174	2	6.254715			
100000200	5174	3	4.979063			
100000200	5174	4	5.186423			
100000200	5174	5	6.025841			
100000200	5174	6	5.192748			
100000200	5174	7	5.791576			
100000200	5174	8	6.351744			
100000200	5174	9	5.308589			
100000200	5174	10	5.721914			
100000200	6041	1	4.740598	MONTICELLO RD	SE	MONTICELLO RD, PEEPLES ST & BLUE RIDGE TER
100000200	6041	2	4.856552			
100000200	6041	3	4.356618			
100000200	6041	4	4.118362			
100000200	6041	5	4.911296			
100000200	6041	6	4.830527			
100000200	6041	7	4.8314			
100000200	6041	8	4.95012			
100000200	6041	9	4.50274			
100000200	6041	10	4.447185			
100000200	6044	1	13.952853	PEEPLES ST	NE	MONTICELLO RD, PEEPLES ST & BLUE RIDGE TER
100000200	6044	2	9.735081			
100000200	6044	3	12.645059			
100000200	6044	4	13.393706			
100000200	6044	5	10.180757			
100000200	6044	6	12.155293			
100000200	6044	7	10.592186			
100000200	6044	8	11.902997			
100000200	6044	9	11.063576			
100000200	6044	10	12.809545			
100000200	6046	1	25.23458	BLUE RIDGE TER	S	MONTICELLO RD, PEEPLES ST & BLUE RIDGE TER
100000200	6046	2	25.707963			
100000200	6046	3	25.527086			
100000200	6046	4	23.052509			
100000200	6046	5	23.539511			
100000200	6046	6	26.444096			
100000200	6046	7	26.030441			
100000200	6046	8	23.945241			
100000200	6046	9	22.422049			
100000200	6046	10	25.081077			
100000201	5157	1	2.216167	BUCKNER RD	SW	BUCKNER RD & TO BUCKNER ROAD
100000201	5157	2	1.716976			
100000201	5157	3	3.22403			
100000201	5157	4	3.148526			
100000201	5157	5	2.649208			
100000201	5157	6	3.056744			
100000201	5157	7	2.55359			
100000201	5157	8	3.032802			
100000201	5157	9	3.823661			
100000201	5157	10	2.619409			
100000201	5161	1	0.016041	TO BUCKNER ROAD	N	BUCKNER RD & TO BUCKNER ROAD
100000201	5161	2	0.278472			
100000201	5161	3	0.05248			
100000201	5161	4	0.513345			
100000201	5161	5	2.843348			
100000201	5161	6	0.977934			
100000201	5161	7	0.014449			
100000201	5161	8	0.063548			
100000201	5161	9	1.371173			
100000201	5161	10	0			
100000201	5163	1	0.0004	BUCKNER RD	NE	BUCKNER RD & TO BUCKNER ROAD
100000201	5163	2	0.000723			
100000201	5163	3	0.001073			
100000201	5163	4	0.000978			
100000201	5163	5	0.000694			
100000201	5163	6	0.000981			
100000201	5163	7	0.002194			
100000201	5163	8	0.000617			

Node	Superlink	Run	Average Control Delay	Approach Street Name	Direction	Intersection
100000201	5163	9	0.001907			
100000201	5163	10	0.000699			
100000203	5169	1		SERVICE RD	E	SERVICE RD & MONTICELLO RD
100000203	5169	2				
100000203	5169	3				
100000203	5169	4				
100000203	5169	5				
100000203	5169	6				
100000203	5169	7				
100000203	5169	8				
100000203	5169	9				
100000203	5169	10				
100000203	5171	1		MONTICELLO RD	N	SERVICE RD & MONTICELLO RD
100000203	5171	2				
100000203	5171	3				
100000203	5171	4				
100000203	5171	5				
100000203	5171	6				
100000203	5171	7				
100000203	5171	8				
100000203	5171	9				
100000203	5171	10				
100000203	5173	1	0.225287	SERVICE RD	W	SERVICE RD & MONTICELLO RD
100000203	5173	2	0.268178			
100000203	5173	3	0.200016			
100000203	5173	4	0.18347			
100000203	5173	5	0.316609			
100000203	5173	6	0.256059			
100000203	5173	7	0.25585			
100000203	5173	8	0.208955			
100000203	5173	9	0.284386			
100000203	5173	10	0.368297			
100000250	6539	1	2.336965	BUSH RIVER RD	NW	E MEADOW CT/WOODLAND VILLAGE DR, BUSH RIVER RD & OUTLET POINTE BLVD
100000250	6539	2	2.292439			
100000250	6539	3	1.818378			
100000250	6539	4	1.812259			
100000250	6539	5	2.444835			
100000250	6539	6	2.328799			
100000250	6539	7	2.726785			
100000250	6539	8	2.197245			
100000250	6539	9	1.742658			
100000250	6539	10	2.794764			
100000250	6546	1	23.314872	OUTLET POINTE BLVD	NE	E MEADOW CT/WOODLAND VILLAGE DR, BUSH RIVER RD & OUTLET POINTE BLVD
100000250	6546	2	25.399982			
100000250	6546	3	25.901554			
100000250	6546	4	26.430137			
100000250	6546	5	24.25721			
100000250	6546	6	25.052854			
100000250	6546	7	23.615084			
100000250	6546	8	26.29429			
100000250	6546	9	25.618523			
100000250	6546	10	27.359752			
100000250	6547	1	34.759205	E MEADOW CT/WOODLAND VILLAGE DR	SW	E MEADOW CT/WOODLAND VILLAGE DR, BUSH RIVER RD & OUTLET POINTE BLVD
100000250	6547	2	36.04651			
100000250	6547	3	32.270879			
100000250	6547	4	34.266889			
100000250	6547	5	31.050301			
100000250	6547	6	41.395157			
100000250	6547	7	32.070359			
100000250	6547	8	32.92319			
100000250	6547	9	40.453604			
100000250	6547	10	32.658212			
100000250	6548	1	9.759228	BUSH RIVER RD	SE	E MEADOW CT/WOODLAND VILLAGE DR, BUSH RIVER RD & OUTLET POINTE BLVD
100000250	6548	2	11.988286			
100000250	6548	3	12.76948			
100000250	6548	4	11.368602			
100000250	6548	5	11.126569			
100000250	6548	6	11.87741			
100000250	6548	7	10.830058			
100000250	6548	8	9.942334			
100000250	6548	9	9.222843			
100000250	6548	10	14.049252			
100000252	5125	1	14.57782	BUSH RIVER RD	E	MORNINGHILL DR, BUSH RIVER RD & RAMP
100000252	5125	2	14.817776			
100000252	5125	3	14.267441			
100000252	5125	4	15.95235			
100000252	5125	5	14.545975			
100000252	5125	6	14.139031			
100000252	5125	7	13.494759			
100000252	5125	8	14.498124			
100000252	5125	9	13.441499			
100000252	5125	10	14.111056			
100000252	5487	1	80.979767	MORNINGHILL DR	S	MORNINGHILL DR, BUSH RIVER RD & RAMP
100000252	5487	2	65.060607			
100000252	5487	3	87.951478			
100000252	5487	4	87.430837			
100000252	5487	5	63.041809			
100000252	5487	6	62.688266			
100000252	5487	7	82.601366			
100000252	5487	8	59.125135			
100000252	5487	9	57.119591			
100000252	5487	10	66.12986			
100000252	5488	1	17.893923	RAMP	N	MORNINGHILL DR, BUSH RIVER RD & RAMP
100000252	5488	2	17.565667			
100000252	5488	3	17.628978			
100000252	5488	4	17.107154			
100000252	5488	5	18.526631			
100000252	5488	6	18.139578			
100000252	5488	7	17.387618			
100000252	5488	8	17.014179			
100000252	5488	9	17.327205			
100000252	5488	10	17.475651			
100000252	6505	1	29.467723	BUSH RIVER RD	W	MORNINGHILL DR, BUSH RIVER RD & RAMP
100000252	6505	2	28.880743			
100000252	6505	3	56.661004			
100000252	6505	4	63.592507			
100000252	6505	5	36.531576			
100000252	6505	6	33.112238			
100000252	6505	7	69.766208			
100000252	6505	8	33.282514			
100000252	6505	9	27.820128			
100000252	6505	10	38.408187			

Node	Superlink	Run	Average Control Delay	Approach Street Name	Direction	Intersection
100000255	5038	1	1.168149	BUSH RIVER RD	E	BUSH RIVER RD & INDEPENDENCE AVE
100000255	5038	2	0.845319			
100000255	5038	3	0.242655			
100000255	5038	4	0.508556			
100000255	5038	5	0.308473			
100000255	5038	6	0.495743			
100000255	5038	7	0.70646			
100000255	5038	8	0.921298			
100000255	5038	9	0.62464			
100000255	5038	10	0.565678			
100000255	5470	1	38.95162	INDEPENDENCE AVE	N	BUSH RIVER RD & INDEPENDENCE AVE
100000255	5470	2	37.30163			
100000255	5470	3	35.775716			
100000255	5470	4	44.273378			
100000255	5470	5	39.211089			
100000255	5470	6	41.146609			
100000255	5470	7	41.640551			
100000255	5470	8	41.843133			
100000255	5470	9	48.745726			
100000255	5470	10	38.714292			
100000255	5471	1	8.072173	BUSH RIVER RD	W	BUSH RIVER RD & INDEPENDENCE AVE
100000255	5471	2	9.260147			
100000255	5471	3	9.352845			
100000255	5471	4	7.402467			
100000255	5471	5	7.451566			
100000255	5471	6	9.738759			
100000255	5471	7	8.584925			
100000255	5471	8	7.916951			
100000255	5471	9	10.881569			
100000255	5471	10	12.04808			
100000256	5131	1	1.384337	BUSH RIVER RD	W	BUSH RIVER RD & ZIMALCREST DR
100000256	5131	2	0.840272			
100000256	5131	3	1.093677			
100000256	5131	4	1.267479			
100000256	5131	5	1.208089			
100000256	5131	6	1.074026			
100000256	5131	7	1.830004			
100000256	5131	8	1.485151			
100000256	5131	9	1.45105			
100000256	5131	10	1.069859			
100000256	5465	1	5.707608	BUSH RIVER RD	E	BUSH RIVER RD & ZIMALCREST DR
100000256	5465	2	5.446481			
100000256	5465	3	6.016399			
100000256	5465	4	4.895816			
100000256	5465	5	4.550364			
100000256	5465	6	5.832324			
100000256	5465	7	7.010452			
100000256	5465	8	7.197168			
100000256	5465	9	4.996332			
100000256	5465	10	4.863796			
100000256	5484	1	56.142323	ZIMALCREST DR	S	BUSH RIVER RD & ZIMALCREST DR
100000256	5484	2	47.635468			
100000256	5484	3	55.86612			
100000256	5484	4	40.035399			
100000256	5484	5	47.397514			
100000256	5484	6	47.753643			
100000256	5484	7	58.531797			
100000256	5484	8	53.394393			
100000256	5484	9	61.367869			
100000256	5484	10	47.857346			
100000256	5485	1	10.806985	ZIMALCREST DR	N	BUSH RIVER RD & ZIMALCREST DR
100000256	5485	2	11.200388			
100000256	5485	3	10.853331			
100000256	5485	4	10.071716			
100000256	5485	5	11.597865			
100000256	5485	6	10.494932			
100000256	5485	7	10.104136			
100000256	5485	8	11.016866			
100000256	5485	9	11.485687			
100000256	5485	10	11.870969			
100000259	5465	1	0	BUSH RIVER RD	W	NOTTINGWOOD DR & BUSH RIVER RD
100000259	5465	2	0			
100000259	5465	3	0			
100000259	5465	4	0			
100000259	5465	5	0			
100000259	5465	6	0			
100000259	5465	7	0			
100000259	5465	8	0			
100000259	5465	9	0			
100000259	5465	10	0			
100000259	5471	1	0	BUSH RIVER RD	E	NOTTINGWOOD DR & BUSH RIVER RD
100000259	5471	2	0			
100000259	5471	3	0			
100000259	5471	4	0			
100000259	5471	5	0			
100000259	5471	6	0			
100000259	5471	7	0			
100000259	5471	8	0			
100000259	5471	9	0			
100000259	5471	10	0			
100000259	5472	1		NOTTINGWOOD DR	S	NOTTINGWOOD DR & BUSH RIVER RD
100000259	5472	2				
100000259	5472	3				
100000259	5472	4				
100000259	5472	5				
100000259	5472	6				
100000259	5472	7				
100000259	5472	8				
100000259	5472	9				
100000259	5472	10				
100000262	5502	1	5.989586	BUSH RIVER RD	E	DUTCH SQUARE ENTRANCE, BUSH RIVER RD & COLONIAL LIFE BLVD W
100000262	5502	2	7.641057			
100000262	5502	3	7.9731			
100000262	5502	4	7.487133			
100000262	5502	5	7.562647			
100000262	5502	6	7.491832			
100000262	5502	7	8.515644			
100000262	5502	8	6.856862			
100000262	5502	9	7.476644			
100000262	5502	10	7.601297			
100000262	5506	1	13.558407	COLONIAL LIFE BLVD W	N	DUTCH SQUARE ENTRANCE, BUSH RIVER RD & COLONIAL LIFE BLVD W
100000262	5506	2	13.579374			

Node	Superlink	Run	Average Control Delay	Approach Street Name	Direction	Intersection
100000262	5506	3	13.481172			
100000262	5506	4	13.242789			
100000262	5506	5	13.666179			
100000262	5506	6	13.506677			
100000262	5506	7	14.052268			
100000262	5506	8	15.099393			
100000262	5506	9	13.850814			
100000262	5506	10	13.41112			
100000262	5509	1	63.346271	DUTCH SQUARE ENTRANCE	S	DUTCH SQUARE ENTRANCE, BUSH RIVER RD & COLONIAL LIFE BLVD W
100000262	5509	2	60.901847			
100000262	5509	3	65.130308			
100000262	5509	4	69.381218			
100000262	5509	5	58.398361			
100000262	5509	6	60.005228			
100000262	5509	7	60.578333			
100000262	5509	8	56.088722			
100000262	5509	9	64.246544			
100000262	5509	10	59.433197			
100000262	5511	1	23.75886	BUSH RIVER RD	W	DUTCH SQUARE ENTRANCE, BUSH RIVER RD & COLONIAL LIFE BLVD W
100000262	5511	2	22.881373			
100000262	5511	3	21.61997			
100000262	5511	4	23.883119			
100000262	5511	5	21.326329			
100000262	5511	6	24.057696			
100000262	5511	7	25.607857			
100000262	5511	8	24.509254			
100000262	5511	9	22.256011			
100000262	5511	10	23.451873			
100000263	5516	1	0.761167	COLONIAL LIFE BLVD W	N	COLONIAL LIFE BLVD W
100000263	5516	2	1.554601			
100000263	5516	3	0.791014			
100000263	5516	4	0.598914			
100000263	5516	5	0.855628			
100000263	5516	6	3.177096			
100000263	5516	7	0.616027			
100000263	5516	8	1.308493			
100000263	5516	9	0.591408			
100000263	5516	10	0.426455			
100000263	5520	1	68.028698	COLONIAL LIFE BLVD W	W	COLONIAL LIFE BLVD W
100000263	5520	2	72.926451			
100000263	5520	3	33.041491			
100000263	5520	4	63.547409			
100000263	5520	5	45.031002			
100000263	5520	6	53.936182			
100000263	5520	7	67.936088			
100000263	5520	8	116.839627			
100000263	5520	9	29.505045			
100000263	5520	10	43.182271			
100000263	6495	1	1.97022	COLONIAL LIFE BLVD W	S	COLONIAL LIFE BLVD W
100000263	6495	2	3.378706			
100000263	6495	3	2.159433			
100000263	6495	4	2.920379			
100000263	6495	5	2.725113			
100000263	6495	6	2.042577			
100000263	6495	7	2.288118			
100000263	6495	8	2.523182			
100000263	6495	9	2.100427			
100000263	6495	10	2.056811			
100000265	5139	1	11.931449	GREYSTONE BLVD	N	GREYSTONE BLVD & STONERIDGE DR
100000265	5139	2	12.986183			
100000265	5139	3	11.986802			
100000265	5139	4	12.60807			
100000265	5139	5	12.915045			
100000265	5139	6	12.129162			
100000265	5139	7	12.278673			
100000265	5139	8	12.986608			
100000265	5139	9	11.514658			
100000265	5139	10	13.598388			
100000265	5537	1	22.15747	STONERIDGE DR	W	GREYSTONE BLVD & STONERIDGE DR
100000265	5537	2	19.830067			
100000265	5537	3	21.83058			
100000265	5537	4	21.632538			
100000265	5537	5	22.413367			
100000265	5537	6	21.11875			
100000265	5537	7	18.055406			
100000265	5537	8	21.768236			
100000265	5537	9	20.642406			
100000265	5537	10	21.257846			
100000265	5556	1	13.074613	STONERIDGE DR	E	GREYSTONE BLVD & STONERIDGE DR
100000265	5556	2	12.762677			
100000265	5556	3	12.060149			
100000265	5556	4	12.874422			
100000265	5556	5	10.389753			
100000265	5556	6	11.700105			
100000265	5556	7	11.073339			
100000265	5556	8	11.795028			
100000265	5556	9	11.986316			
100000265	5556	10	11.303986			
100000265	6328	1	17.822085	GREYSTONE BLVD	S	GREYSTONE BLVD & STONERIDGE DR
100000265	6328	2	18.563799			
100000265	6328	3	17.465548			
100000265	6328	4	18.426073			
100000265	6328	5	17.664247			
100000265	6328	6	19.052014			
100000265	6328	7	19.193069			
100000265	6328	8	18.794642			
100000265	6328	9	19.102687			
100000265	6328	10	17.422219			
100000266	5545	1	31.355036	GREYSTONE BLVD	N	GREYSTONE BLVD & BROAD RIVER RD
100000266	5545	2	31.320175			
100000266	5545	3	30.327764			
100000266	5545	4	30.669477			
100000266	5545	5	32.853609			
100000266	5545	6	30.374326			
100000266	5545	7	31.934707			
100000266	5545	8	32.064211			
100000266	5545	9	31.802556			
100000266	5545	10	31.761095			
100000266	6325	1	8.124312	BROAD RIVER RD	W	GREYSTONE BLVD & BROAD RIVER RD
100000266	6325	2	7.424941			
100000266	6325	3	7.990677			
100000266	6325	4	7.318723			

Node	Superlink	Run	Average Control Delay	Approach Street Name	Direction	Intersection
100000266	6325	5	7.875949			
100000266	6325	6	7.83444			
100000266	6325	7	9.804323			
100000266	6325	8	7.569616			
100000266	6325	9	6.841651			
100000266	6325	10	6.879825			
100000266	6327	1	11.918525	BROAD RIVER RD	E	GREYSTONE BLVD & BROAD RIVER RD
100000266	6327	2	10.782946			
100000266	6327	3	12.053811			
100000266	6327	4	11.920423			
100000266	6327	5	11.415112			
100000266	6327	6	12.046886			
100000266	6327	7	11.817206			
100000266	6327	8	11.755369			
100000266	6327	9	11.04104			
100000266	6327	10	10.636941			
100000268	5565	1	29.404279	HUGER ST	N	HUGER ST & LAUREL ST
100000268	5565	2	34.356249			
100000268	5565	3	29.011856			
100000268	5565	4	24.784586			
100000268	5565	5	31.044803			
100000268	5565	6	26.785139			
100000268	5565	7	24.342428			
100000268	5565	8	25.926823			
100000268	5565	9	22.689379			
100000268	5565	10	28.528552			
100000268	5570	1		LAUREL ST	E	HUGER ST & LAUREL ST
100000268	5570	2				
100000268	5570	3				
100000268	5570	4				
100000268	5570	5				
100000268	5570	6				
100000268	5570	7				
100000268	5570	8				
100000268	5570	9				
100000268	5570	10				
100000268	5571	1	19.625228	HUGER ST	S	HUGER ST & LAUREL ST
100000268	5571	2	20.760809			
100000268	5571	3	20.469008			
100000268	5571	4	19.762218			
100000268	5571	5	17.370274			
100000268	5571	6	19.064591			
100000268	5571	7	20.790207			
100000268	5571	8	18.790733			
100000268	5571	9	19.708746			
100000268	5571	10	20.058945			
100000268	5581	1	57.815887	LAUREL ST	W	HUGER ST & LAUREL ST
100000268	5581	2	56.443481			
100000268	5581	3	53.633549			
100000268	5581	4	61.497502			
100000268	5581	5	52.477554			
100000268	5581	6	59.618745			
100000268	5581	7	57.984944			
100000268	5581	8	60.090806			
100000268	5581	9	51.782707			
100000268	5581	10	65.495117			
100000339	6083	1	8.320599	BROAD RIVER RD	NW	BROAD RIVER RD & ST ANDREWS RD
100000339	6083	2	8.549129			
100000339	6083	3	8.225413			
100000339	6083	4	8.87645			
100000339	6083	5	8.012433			
100000339	6083	6	10.080344			
100000339	6083	7	8.28663			
100000339	6083	8	9.267916			
100000339	6083	9	9.276456			
100000339	6083	10	8.118571			
100000339	6084	1	17.353924	BROAD RIVER RD	SE	BROAD RIVER RD & ST ANDREWS RD
100000339	6084	2	16.854233			
100000339	6084	3	16.3139			
100000339	6084	4	16.917868			
100000339	6084	5	21.716586			
100000339	6084	6	16.585697			
100000339	6084	7	18.977926			
100000339	6084	8	19.656264			
100000339	6084	9	16.939942			
100000339	6084	10	17.21232			
100000339	6085	1	81.228445	ST ANDREWS RD	SW	BROAD RIVER RD & ST ANDREWS RD
100000339	6085	2	75.587887			
100000339	6085	3	86.984319			
100000339	6085	4	77.900598			
100000339	6085	5	72.890545			
100000339	6085	6	69.42773			
100000339	6085	7	76.968998			
100000339	6085	8	69.903312			
100000339	6085	9	104.553066			
100000339	6085	10	80.253397			
100000339	6086	1	27.113904	ST ANDREWS RD	E	BROAD RIVER RD & ST ANDREWS RD
100000339	6086	2	32.042665			
100000339	6086	3	25.363792			
100000339	6086	4	26.746204			
100000339	6086	5	26.641164			
100000339	6086	6	28.414634			
100000339	6086	7	26.909063			
100000339	6086	8	28.923603			
100000339	6086	9	24.708898			
100000339	6086	10	30.538488			
100000343	6059	1	0.000556	BROAD RIVER RD	NW	NUNAMAKER DR & BROAD RIVER RD
100000343	6059	2	0.000258			
100000343	6059	3	0.000292			
100000343	6059	4	0.000165			
100000343	6059	5	0			
100000343	6059	6	0.000209			
100000343	6059	7	0.002922			
100000343	6059	8	0.000423			
100000343	6059	9	0.000452			
100000343	6059	10	0.000943			
100000343	6063	1		NUNAMAKER DR	SW	NUNAMAKER DR & BROAD RIVER RD
100000343	6063	2				
100000343	6063	3				
100000343	6063	4				
100000343	6063	5				
100000343	6063	6				

Node	Superlink	Run	Average Control Delay	Approach Street Name	Direction	Intersection
100000343	6063	7				
100000343	6063	8				
100000343	6063	9				
100000343	6063	10				
100000343	6065	1	0.008442	BROAD RIVER RD	SE	NUNAMAKER DR & BROAD RIVER RD
100000343	6065	2	0.010282			
100000343	6065	3	0.008467			
100000343	6065	4	0.005528			
100000343	6065	5	0.005627			
100000343	6065	6	0.00833			
100000343	6065	7	0.008174			
100000343	6065	8	0.010998			
100000343	6065	9	0.004994			
100000343	6065	10	0.010508			
100000344	6065	1	37.487668	BROAD RIVER RD	NW	YOUNG DR, BROAD RIVER RD & SEMINOLE RD
100000344	6065	2	33.085303			
100000344	6065	3	35.380267			
100000344	6065	4	31.710529			
100000344	6065	5	40.22156			
100000344	6065	6	37.07553			
100000344	6065	7	38.054008			
100000344	6065	8	29.6268			
100000344	6065	9	24.062026			
100000344	6065	10	28.543223			
100000344	6066	1	33.903575	BROAD RIVER RD	SE	YOUNG DR, BROAD RIVER RD & SEMINOLE RD
100000344	6066	2	49.843358			
100000344	6066	3	46.162125			
100000344	6066	4	23.782113			
100000344	6066	5	77.118646			
100000344	6066	6	36.994267			
100000344	6066	7	102.563169			
100000344	6066	8	47.974233			
100000344	6066	9	33.59782			
100000344	6066	10	50.620358			
100000344	6067	1	169.075751	YOUNG DR	SW	YOUNG DR, BROAD RIVER RD & SEMINOLE RD
100000344	6067	2	233.475844			
100000344	6067	3	223.194905			
100000344	6067	4	213.715305			
100000344	6067	5	232.056501			
100000344	6067	6	190.765879			
100000344	6067	7	214.084763			
100000344	6067	8	238.807926			
100000344	6067	9	237.797572			
100000344	6067	10	240.096485			
100000344	6068	1	197.145342	SEMINOLE RD	NE	YOUNG DR, BROAD RIVER RD & SEMINOLE RD
100000344	6068	2	209.973933			
100000344	6068	3	178.428448			
100000344	6068	4	193.897839			
100000344	6068	5	187.411893			
100000344	6068	6	208.418313			
100000344	6068	7	182.362879			
100000344	6068	8	191.610224			
100000344	6068	9	174.106807			
100000344	6068	10	187.650175			
100000348	5116	1	8.144159	ST ANDREWS RD	NW	ST ANDREWS RD & JAMIL RD
100000348	5116	2	7.965443			
100000348	5116	3	6.837994			
100000348	5116	4	7.772441			
100000348	5116	5	7.971133			
100000348	5116	6	9.214797			
100000348	5116	7	8.849525			
100000348	5116	8	8.942606			
100000348	5116	9	8.11047			
100000348	5116	10	8.472471			
100000348	6114	1	7.811306	ST ANDREWS RD	E	ST ANDREWS RD & JAMIL RD
100000348	6114	2	12.155884			
100000348	6114	3	6.538668			
100000348	6114	4	8.562827			
100000348	6114	5	7.273994			
100000348	6114	6	8.533991			
100000348	6114	7	9.759419			
100000348	6114	8	12.110768			
100000348	6114	9	7.612076			
100000348	6114	10	8.93974			
100000348	6119	1	32.73054	JAMIL RD	S	ST ANDREWS RD & JAMIL RD
100000348	6119	2	29.762985			
100000348	6119	3	27.767997			
100000348	6119	4	30.794778			
100000348	6119	5	30.194387			
100000348	6119	6	30.255744			
100000348	6119	7	29.444991			
100000348	6119	8	28.749714			
100000348	6119	9	30.82996			
100000348	6119	10	30.332971			
100000349	6066	1	3.181057	BROAD RIVER RD	NW	ST ANDREWS PKY & BROAD RIVER RD
100000349	6066	2	3.167169			
100000349	6066	3	2.718298			
100000349	6066	4	2.380495			
100000349	6066	5	2.716942			
100000349	6066	6	3.252997			
100000349	6066	7	2.534414			
100000349	6066	8	2.758342			
100000349	6066	9	2.680934			
100000349	6066	10	2.522103			
100000349	6078	1	60.866507	ST ANDREWS PKY	SW	ST ANDREWS PKY & BROAD RIVER RD
100000349	6078	2	56.114118			
100000349	6078	3	54.895562			
100000349	6078	4	61.398212			
100000349	6078	5	65.730596			
100000349	6078	6	63.73752			
100000349	6078	7	57.287049			
100000349	6078	8	56.325457			
100000349	6078	9	59.3079			
100000349	6078	10	63.748993			
100000349	6079	1	299.084741	BROAD RIVER RD	NE	ST ANDREWS PKY & BROAD RIVER RD
100000349	6079	2	294.881679			
100000349	6079	3	351.775083			
100000349	6079	4	378.522555			
100000349	6079	5	322.295086			
100000349	6079	6	296.692088			
100000349	6079	7	330.092285			
100000349	6079	8	355.492445			

Node	Superlink	Run	Average Control Delay	Approach Street Name	Direction	Intersection
100000349	6079	9	278.296608			
100000349	6079	10	289.207514			
100000349	6083	1	3.260535	BROAD RIVER RD	SE	ST ANDREWS PKY & BROAD RIVER RD
100000349	6083	2	3.325513			
100000349	6083	3	2.343775			
100000349	6083	4	2.138177			
100000349	6083	5	2.971849			
100000349	6083	6	2.301386			
100000349	6083	7	2.602548			
100000349	6083	8	2.810114			
100000349	6083	9	2.977945			
100000349	6083	10	2.501473			
100000353	5104	1	15.606859	PINEY GROVE RD	W	BOWER PKY, PINEY GROVE RD & JAMIL RD
100000353	5104	2	12.821755			
100000353	5104	3	13.275328			
100000353	5104	4	16.131918			
100000353	5104	5	15.033089			
100000353	5104	6	13.770984			
100000353	5104	7	13.680167			
100000353	5104	8	14.340739			
100000353	5104	9	15.387294			
100000353	5104	10	13.247104			
100000353	6125	1	40.007302	BOWER PKY	SE	BOWER PKY, PINEY GROVE RD & JAMIL RD
100000353	6125	2	47.538003			
100000353	6125	3	47.707802			
100000353	6125	4	44.243413			
100000353	6125	5	38.524505			
100000353	6125	6	46.226459			
100000353	6125	7	46.034203			
100000353	6125	8	42.781498			
100000353	6125	9	42.670199			
100000353	6125	10	47.353448			
100000353	6126	1	25.123396	PINEY GROVE RD	E	BOWER PKY, PINEY GROVE RD & JAMIL RD
100000353	6126	2	27.236692			
100000353	6126	3	25.076062			
100000353	6126	4	26.744766			
100000353	6126	5	25.048646			
100000353	6126	6	25.773437			
100000353	6126	7	24.765727			
100000353	6126	8	23.98043			
100000353	6126	9	30.132365			
100000353	6126	10	26.154815			
100000353	6127	1	90.848413	JAMIL RD	NW	BOWER PKY, PINEY GROVE RD & JAMIL RD
100000353	6127	2	63.746058			
100000353	6127	3	83.376284			
100000353	6127	4	64.889867			
100000353	6127	5	87.328396			
100000353	6127	6	128.306548			
100000353	6127	7	170.557773			
100000353	6127	8	84.761498			
100000353	6127	9	59.084617			
100000353	6127	10	142.914777			
100000354	6095	1	14.197111	ST ANDREWS RD	SW	ST ANDREWS RD, KAY ST & CHARTWELL RD
100000354	6095	2	9.163894			
100000354	6095	3	10.613679			
100000354	6095	4	10.8771			
100000354	6095	5	16.168032			
100000354	6095	6	12.860143			
100000354	6095	7	12.02117			
100000354	6095	8	12.206522			
100000354	6095	9	11.670865			
100000354	6095	10	12.351874			
100000354	6096	1	7.734328	ST ANDREWS RD	NE	ST ANDREWS RD, KAY ST & CHARTWELL RD
100000354	6096	2	4.766244			
100000354	6096	3	7.099362			
100000354	6096	4	7.25551			
100000354	6096	5	7.463876			
100000354	6096	6	5.653904			
100000354	6096	7	6.802309			
100000354	6096	8	6.785901			
100000354	6096	9	5.898954			
100000354	6096	10	6.41544			
100000354	6098	1	24.161399	CHARTWELL RD	NW	ST ANDREWS RD, KAY ST & CHARTWELL RD
100000354	6098	2	33.792207			
100000354	6098	3	32.41498			
100000354	6098	4	32.946001			
100000354	6098	5	56.099153			
100000354	6098	6	35.385715			
100000354	6098	7	50.305633			
100000354	6098	8	29.085034			
100000354	6098	9	41.25707			
100000354	6098	10	26.209161			
100000354	6099	1	46.361249	KAY ST	SE	ST ANDREWS RD, KAY ST & CHARTWELL RD
100000354	6099	2	30.264296			
100000354	6099	3	27.614686			
100000354	6099	4	29.899528			
100000354	6099	5	32.821291			
100000354	6099	6	30.681431			
100000354	6099	7	29.973491			
100000354	6099	8	32.19693			
100000354	6099	9	35.255941			
100000354	6099	10	31.141365			
100000356	6086	1	0.384237	ST ANDREWS RD	SW	LAWRENCE ST & ST ANDREWS RD
100000356	6086	2	0.312254			
100000356	6086	3	0.356602			
100000356	6086	4	0.374643			
100000356	6086	5	0.333817			
100000356	6086	6	0.406587			
100000356	6086	7	0.392514			
100000356	6086	8	0.311918			
100000356	6086	9	0.360005			
100000356	6086	10	0.39651			
100000356	6092	1	12.165598	LAWRENCE ST	SE	LAWRENCE ST & ST ANDREWS RD
100000356	6092	2	10.36258			
100000356	6092	3	10.036644			
100000356	6092	4	12.069746			
100000356	6092	5	11.359138			
100000356	6092	6	9.599603			
100000356	6092	7	9.971553			
100000356	6092	8	10.240374			
100000356	6092	9	9.768868			
100000356	6092	10	10.598798			

Node	Superlink	Run	Average Control Delay	Approach Street Name	Direction	Intersection
100000356	6094	1	2.808251	ST ANDREWS RD	NE	LAWRENCE ST & ST ANDREWS RD
100000356	6094	2	3.176569			
100000356	6094	3	3.852499			
100000356	6094	4	2.605589			
100000356	6094	5	3.260804			
100000356	6094	6	2.678025			
100000356	6094	7	2.664688			
100000356	6094	8	3.034673			
100000356	6094	9	2.740581			
100000356	6094	10	3.178142			
100000357	6119	1	2.404493	JAMIL RD	NW	JAMIL RD & PAISLEY LN
100000357	6119	2	2.222355			
100000357	6119	3	1.624687			
100000357	6119	4	1.463315			
100000357	6119	5	2.058525			
100000357	6119	6	1.810477			
100000357	6119	7	1.614856			
100000357	6119	8	1.779874			
100000357	6119	9	1.922165			
100000357	6119	10	1.659045			
100000357	6120	1	52.962588	PAISLEY LN	NE	JAMIL RD & PAISLEY LN
100000357	6120	2	26.137461			
100000357	6120	3	23.926943			
100000357	6120	4	25.232991			
100000357	6120	5	33.677999			
100000357	6120	6	84.88199			
100000357	6120	7	58.865805			
100000357	6120	8	102.088942			
100000357	6120	9	43.400637			
100000357	6120	10	64.338038			
100000357	6121	1	1.71436	JAMIL RD	SE	JAMIL RD & PAISLEY LN
100000357	6121	2	1.114619			
100000357	6121	3	1.297379			
100000357	6121	4	1.029295			
100000357	6121	5	1.490539			
100000357	6121	6	1.584875			
100000357	6121	7	1.219551			
100000357	6121	8	1.116812			
100000357	6121	9	1.216024			
100000357	6121	10	1.499121			
100000358	5117	1	15.355496	ST ANDREWS RD	NE	ST ANDREWS RD, FERNANDINA RD & BURNING TREE RD
100000358	5117	2	16.656136			
100000358	5117	3	14.257162			
100000358	5117	4	14.45734			
100000358	5117	5	14.365577			
100000358	5117	6	13.630287			
100000358	5117	7	13.629297			
100000358	5117	8	14.378529			
100000358	5117	9	14.255186			
100000358	5117	10	13.561301			
100000358	6100	1	19.72208	ST ANDREWS RD	SW	ST ANDREWS RD, FERNANDINA RD & BURNING TREE RD
100000358	6100	2	18.99476			
100000358	6100	3	19.68484			
100000358	6100	4	19.537009			
100000358	6100	5	19.995804			
100000358	6100	6	20.334275			
100000358	6100	7	19.560393			
100000358	6100	8	20.798349			
100000358	6100	9	20.722603			
100000358	6100	10	20.329475			
100000358	6101	1	32.021792	BURNING TREE RD	NW	ST ANDREWS RD, FERNANDINA RD & BURNING TREE RD
100000358	6101	2	30.607008			
100000358	6101	3	26.765792			
100000358	6101	4	27.191132			
100000358	6101	5	36.414766			
100000358	6101	6	35.894644			
100000358	6101	7	32.406585			
100000358	6101	8	28.402535			
100000358	6101	9	26.765151			
100000358	6101	10	38.15114			
100000358	6102	1	44.790938	FERNANDINA RD	SE	ST ANDREWS RD, FERNANDINA RD & BURNING TREE RD
100000358	6102	2	51.106585			
100000358	6102	3	61.519157			
100000358	6102	4	32.985322			
100000358	6102	5	62.6793			
100000358	6102	6	66.808866			
100000358	6102	7	51.779398			
100000358	6102	8	52.326121			
100000358	6102	9	52.605475			
100000358	6102	10	61.290054			
100000360	3294	1	9.138093	EXIT 106 WB OFF RAMP	NE	EXIT 106 WB OFF RAMP & BURNING TREE RD
100000360	3294	2	9.983291			
100000360	3294	3	7.536977			
100000360	3294	4	8.251912			
100000360	3294	5	11.55017			
100000360	3294	6	11.668463			
100000360	3294	7	9.712804			
100000360	3294	8	8.301898			
100000360	3294	9	8.273177			
100000360	3294	10	15.226393			
100000360	6101	1	0.051709	BURNING TREE RD	S	EXIT 106 WB OFF RAMP & BURNING TREE RD
100000360	6101	2	0.054296			
100000360	6101	3	0.0696			
100000360	6101	4	0.026154			
100000360	6101	5	0.042798			
100000360	6101	6	0.101541			
100000360	6101	7	0.035106			
100000360	6101	8	0.069626			
100000360	6101	9	0.015888			
100000360	6101	10	0.0572			
100000360	6105	1	0.007142	BURNING TREE RD	N	EXIT 106 WB OFF RAMP & BURNING TREE RD
100000360	6105	2	0.005849			
100000360	6105	3	0.007872			
100000360	6105	4	0.011659			
100000360	6105	5	0.005121			
100000360	6105	6	0.004231			
100000360	6105	7	0.002426			
100000360	6105	8	0.005663			
100000360	6105	9	0.006316			
100000360	6105	10	0.001184			
100000362	6134	1	18.531549	JAMIL RD	NW	HARBISON BLVD & JAMIL RD
100000362	6134	2	21.937833			

Node	Superlink	Run	Average Control Delay	Approach Street Name	Direction	Intersection
100000362	6134	3	16.466573			
100000362	6134	4	17.669505			
100000362	6134	5	15.73308			
100000362	6134	6	18.147322			
100000362	6134	7	17.280936			
100000362	6134	8	17.389634			
100000362	6134	9	21.027124			
100000362	6134	10	20.109202			
100000362	6137	1	1.373257	HARBISON BLVD	NE	HARBISON BLVD & JAMIL RD
100000362	6137	2	1.074659			
100000362	6137	3	1.239837			
100000362	6137	4	1.417347			
100000362	6137	5	1.094671			
100000362	6137	6	1.145417			
100000362	6137	7	1.16279			
100000362	6137	8	1.09321			
100000362	6137	9	1.159472			
100000362	6137	10	1.40894			
100000362	6473	1	0.005352	HARBISON BLVD	SW	HARBISON BLVD & JAMIL RD
100000362	6473	2	0.009776			
100000362	6473	3	0.02337			
100000362	6473	4	0.002588			
100000362	6473	5	0.005631			
100000362	6473	6	0.002404			
100000362	6473	7	0.007424			
100000362	6473	8	0.006241			
100000362	6473	9	0.023336			
100000362	6473	10	0.001792			
100000363	6125	1	0.538666	BOWER PKY	NW	BOWER PKY & JAMIL RD
100000363	6125	2	0.547863			
100000363	6125	3	0.608482			
100000363	6125	4	0.799188			
100000363	6125	5	0.606574			
100000363	6125	6	0.754356			
100000363	6125	7	0.527338			
100000363	6125	8	0.594147			
100000363	6125	9	0.548157			
100000363	6125	10	0.625427			
100000363	6134	1	25.28642	JAMIL RD	SW	BOWER PKY & JAMIL RD
100000363	6134	2	30.990818			
100000363	6134	3	24.167136			
100000363	6134	4	27.489238			
100000363	6134	5	31.651702			
100000363	6134	6	25.701673			
100000363	6134	7	20.203169			
100000363	6134	8	29.054906			
100000363	6134	9	28.574463			
100000363	6134	10	21.885374			
100000363	6160	1	0.478832	BOWER PKY	SE	BOWER PKY & JAMIL RD
100000363	6160	2	0.441681			
100000363	6160	3	0.679125			
100000363	6160	4	0.317924			
100000363	6160	5	0.570095			
100000363	6160	6	0.518482			
100000363	6160	7	0.521134			
100000363	6160	8	0.497257			
100000363	6160	9	0.590213			
100000363	6160	10	0.447975			
100000364	6145	1	4.401823	HARBISON BLVD	SW	HARBISON BLVD & COLUMBIANA DR
100000364	6145	2	4.40526			
100000364	6145	3	3.979269			
100000364	6145	4	4.32564			
100000364	6145	5	3.747358			
100000364	6145	6	4.117431			
100000364	6145	7	3.450227			
100000364	6145	8	3.954804			
100000364	6145	9	3.913081			
100000364	6145	10	3.899759			
100000364	6176	1	2.808578	HARBISON BLVD	NE	HARBISON BLVD & COLUMBIANA DR
100000364	6176	2	3.02594			
100000364	6176	3	2.826824			
100000364	6176	4	2.839882			
100000364	6176	5	2.199493			
100000364	6176	6	2.546882			
100000364	6176	7	2.914599			
100000364	6176	8	3.245975			
100000364	6176	9	2.778949			
100000364	6176	10	3.166055			
100000364	6177	1		COLUMBIANA DR	NW	HARBISON BLVD & COLUMBIANA DR
100000364	6177	2				
100000364	6177	3				
100000364	6177	4				
100000364	6177	5				
100000364	6177	6				
100000364	6177	7				
100000364	6177	8				
100000364	6177	9				
100000364	6177	10				
100000364	6196	1	52.458148	COLUMBIANA DR	SE	HARBISON BLVD & COLUMBIANA DR
100000364	6196	2	53.436737			
100000364	6196	3	58.769472			
100000364	6196	4	57.042514			
100000364	6196	5	56.592625			
100000364	6196	6	56.274027			
100000364	6196	7	58.251116			
100000364	6196	8	52.195863			
100000364	6196	9	55.175129			
100000364	6196	10	57.738753			
100000365	6137	1	10.187925	HARBISON BLVD	SW	COLUMBIANA CIR, HARBISON BLVD & PARK TERRACE DR
100000365	6137	2	10.01249			
100000365	6137	3	9.8954			
100000365	6137	4	11.730834			
100000365	6137	5	9.008662			
100000365	6137	6	9.702684			
100000365	6137	7	10.10946			
100000365	6137	8	9.431994			
100000365	6137	9	9.888462			
100000365	6137	10	9.999338			
100000365	6140	1	53.550878	COLUMBIANA CIR	SE	COLUMBIANA CIR, HARBISON BLVD & PARK TERRACE DR
100000365	6140	2	44.659138			
100000365	6140	3	49.974241			
100000365	6140	4	48.462212			

Node	Superlink	Run	Average Control Delay	Approach Street Name	Direction	Intersection
100000365	6140	5	48.156568			
100000365	6140	6	52.814972			
100000365	6140	7	46.36634			
100000365	6140	8	47.198178			
100000365	6140	9	46.403931			
100000365	6140	10	49.62379			
100000365	6145	1	11.520049	HARBISON BLVD	NE	COLUMBIANA CIR, HARBISON BLVD & PARK TERRACE DR
100000365	6145	2	10.031054			
100000365	6145	3	10.988706			
100000365	6145	4	11.717921			
100000365	6145	5	10.731384			
100000365	6145	6	11.333033			
100000365	6145	7	10.293175			
100000365	6145	8	10.541866			
100000365	6145	9	10.133286			
100000365	6145	10	12.118609			
100000365	6151	1	48.349539	PARK TERRACE DR	NW	COLUMBIANA CIR, HARBISON BLVD & PARK TERRACE DR
100000365	6151	2	48.250558			
100000365	6151	3	43.893638			
100000365	6151	4	49.257633			
100000365	6151	5	44.833047			
100000365	6151	6	47.030731			
100000365	6151	7	44.097443			
100000365	6151	8	48.372082			
100000365	6151	9	44.778816			
100000365	6151	10	43.383179			
100000374	6151	1	42.256684	PARK TERRACE DR	S	BOWER PKY, PARK TERRACE DR & 6161 (S)
100000374	6151	2	40.587538			
100000374	6151	3	49.305058			
100000374	6151	4	40.672258			
100000374	6151	5	59.572464			
100000374	6151	6	37.152255			
100000374	6151	7	39.777469			
100000374	6151	8	56.757578			
100000374	6151	9	38.925532			
100000374	6151	10	45.420832			
100000374	6160	1	14.900981	BOWER PKY	W	BOWER PKY, PARK TERRACE DR & 6161 (S)
100000374	6160	2	14.789273			
100000374	6160	3	16.334561			
100000374	6160	4	11.963305			
100000374	6160	5	17.109251			
100000374	6160	6	15.840227			
100000374	6160	7	15.62996			
100000374	6160	8	16.114167			
100000374	6160	9	17.605057			
100000374	6160	10	15.172578			
100000374	6161	1	3.494737		N	BOWER PKY, PARK TERRACE DR & 6161 (S)
100000374	6161	2	4.037347			
100000374	6161	3	3.433383			
100000374	6161	4	4.223888			
100000374	6161	5	3.785261			
100000374	6161	6	3.325932			
100000374	6161	7	3.942735			
100000374	6161	8	3.668329			
100000374	6161	9	4.115649			
100000374	6161	10	3.500762			
100000374	6162	1		BOWER PKY	E	BOWER PKY, PARK TERRACE DR & 6161 (S)
100000374	6162	2				
100000374	6162	3				
100000374	6162	4				
100000374	6162	5				
100000374	6162	6				
100000374	6162	7				
100000374	6162	8				
100000374	6162	9				
100000374	6162	10				
100000375	6196	1	5.286143	COLUMBIANA DR	NW	COLUMBIANA DR, CROSSBOW DR & DRIVEWAY
100000375	6196	2	4.809939			
100000375	6196	3	4.565974			
100000375	6196	4	4.486778			
100000375	6196	5	4.327834			
100000375	6196	6	4.589447			
100000375	6196	7	3.566703			
100000375	6196	8	4.221217			
100000375	6196	9	3.359472			
100000375	6196	10	4.652204			
100000375	6204	1	6.817698	COLUMBIANA DR	SE	COLUMBIANA DR, CROSSBOW DR & DRIVEWAY
100000375	6204	2	4.893852			
100000375	6204	3	5.180498			
100000375	6204	4	4.397033			
100000375	6204	5	5.464892			
100000375	6204	6	4.199985			
100000375	6204	7	4.528435			
100000375	6204	8	4.194874			
100000375	6204	9	4.630979			
100000375	6204	10	5.27704			
100000375	6550	1	25.974692	CROSSBOW DR	NE	COLUMBIANA DR, CROSSBOW DR & DRIVEWAY
100000375	6550	2	21.899199			
100000375	6550	3	24.209049			
100000375	6550	4	22.098784			
100000375	6550	5	22.472445			
100000375	6550	6	23.183874			
100000375	6550	7	23.474028			
100000375	6550	8	23.09912			
100000375	6550	9	24.529154			
100000375	6550	10	27.749961			
100000375	6551	1	6.40075	DRIVEWAY	SW	COLUMBIANA DR, CROSSBOW DR & DRIVEWAY
100000375	6551	2	6.269003			
100000375	6551	3	5.963022			
100000375	6551	4	6.600422			
100000375	6551	5	7.209621			
100000375	6551	6	7.197543			
100000375	6551	7	7.194546			
100000375	6551	8	5.551687			
100000375	6551	9	6.58723			
100000375	6551	10	5.824513			
100000391	5071	1	4.779266	BROAD RIVER RD	NW	BROAD RIVER RD & COLUMBIANA DR
100000391	5071	2	5.013216			
100000391	5071	3	4.911289			
100000391	5071	4	5.358274			
100000391	5071	5	5.113992			
100000391	5071	6	4.70534			

Node	Superlink	Run	Average Control Delay	Approach Street Name	Direction	Intersection
100000391	5071	7	5.280487			
100000391	5071	8	5.26252			
100000391	5071	9	4.751723			
100000391	5071	10	5.907784			
100000391	6214	1	53.873603	COLUMBIANA DR	NE	BROAD RIVER RD & COLUMBIANA DR
100000391	6214	2	46.236736			
100000391	6214	3	56.91712			
100000391	6214	4	51.156668			
100000391	6214	5	53.397916			
100000391	6214	6	50.209047			
100000391	6214	7	60.359651			
100000391	6214	8	73.231066			
100000391	6214	9	53.466026			
100000391	6214	10	62.557396			
100000391	6224	1	8.192995	BROAD RIVER RD	SE	BROAD RIVER RD & COLUMBIANA DR
100000391	6224	2	7.914415			
100000391	6224	3	7.990537			
100000391	6224	4	7.294789			
100000391	6224	5	6.337918			
100000391	6224	6	7.754009			
100000391	6224	7	8.729391			
100000391	6224	8	8.772375			
100000391	6224	9	8.304942			
100000391	6224	10	7.978174			
100000392	6121	1	0.162712	JAMIL RD	NW	TRAM RD & JAMIL RD
100000392	6121	2	0.387545			
100000392	6121	3	0.365166			
100000392	6121	4	0.795073			
100000392	6121	5	0.045168			
100000392	6121	6	0.775181			
100000392	6121	7	0.410188			
100000392	6121	8	0.394746			
100000392	6121	9	0.82942			
100000392	6121	10	0.171185			
100000392	6127	1	0.31646	JAMIL RD	SE	TRAM RD & JAMIL RD
100000392	6127	2	0.156914			
100000392	6127	3	0.15293			
100000392	6127	4	0.209735			
100000392	6127	5	0.451576			
100000392	6127	6	0.378795			
100000392	6127	7	0.338729			
100000392	6127	8	0.274874			
100000392	6127	9	0.495838			
100000392	6127	10	0.247594			
100000392	6261	1	9.775081	TRAM RD	NE	TRAM RD & JAMIL RD
100000392	6261	2	9.19816			
100000392	6261	3	9.190338			
100000392	6261	4	8.951684			
100000392	6261	5	9.216807			
100000392	6261	6	8.785196			
100000392	6261	7	8.965648			
100000392	6261	8	9.480471			
100000392	6261	9	10.057529			
100000392	6261	10	9.098908			
100000394	6204	1	0	COLUMBIANA DR	NW	COLUMBIANA DR, COLUMBIA AVE & DRIVEWAY
100000394	6204	2	0			
100000394	6204	3	0			
100000394	6204	4	0			
100000394	6204	5	0			
100000394	6204	6	0			
100000394	6204	7	0			
100000394	6204	8	0			
100000394	6204	9	0			
100000394	6204	10	0			
100000394	6208	1	0	COLUMBIANA DR	SE	COLUMBIANA DR, COLUMBIA AVE & DRIVEWAY
100000394	6208	2	0			
100000394	6208	3	0			
100000394	6208	4	0			
100000394	6208	5	0			
100000394	6208	6	0			
100000394	6208	7	0			
100000394	6208	8	0			
100000394	6208	9	0			
100000394	6208	10	0			
100000394	6210	1		COLUMBIA AVE	NE	COLUMBIANA DR, COLUMBIA AVE & DRIVEWAY
100000394	6210	2				
100000394	6210	3				
100000394	6210	4				
100000394	6210	5				
100000394	6210	6				
100000394	6210	7				
100000394	6210	8				
100000394	6210	9				
100000394	6210	10				
100000394	6549	1		DRIVEWAY	SW	COLUMBIANA DR, COLUMBIA AVE & DRIVEWAY
100000394	6549	2				
100000394	6549	3				
100000394	6549	4				
100000394	6549	5				
100000394	6549	6				
100000394	6549	7				
100000394	6549	8				
100000394	6549	9				
100000394	6549	10				
100000395	5084	1	128.791283	LAKE MURRAY BLVD	W	LAKE MURRAY BLVD & COLUMBIANA DR
100000395	5084	2	128.63663			
100000395	5084	3	139.097582			
100000395	5084	4	133.621714			
100000395	5084	5	124.704485			
100000395	5084	6	131.363152			
100000395	5084	7	128.557984			
100000395	5084	8	131.723294			
100000395	5084	9	128.842332			
100000395	5084	10	132.447827			
100000395	6208	1	198.495628	COLUMBIANA DR	NW	LAKE MURRAY BLVD & COLUMBIANA DR
100000395	6208	2	131.057028			
100000395	6208	3	163.862109			
100000395	6208	4	221.816317			
100000395	6208	5	167.982415			
100000395	6208	6	223.428185			
100000395	6208	7	173.70418			
100000395	6208	8	185.588004			

Node	Superlink	Run	Average Control Delay	Approach Street Name	Direction	Intersection
100000395	6208	9	207.036213			
100000395	6208	10	126.236644			
100000395	6214	1	30.790855	COLUMBIANA DR	S	LAKE MURRAY BLVD & COLUMBIANA DR
100000395	6214	2	40.947385			
100000395	6214	3	28.010592			
100000395	6214	4	40.891657			
100000395	6214	5	29.473544			
100000395	6214	6	26.179394			
100000395	6214	7	35.146381			
100000395	6214	8	29.914098			
100000395	6214	9	38.407908			
100000395	6214	10	43.991932			
100000395	6215	1	51.114547	LAKE MURRAY BLVD	E	LAKE MURRAY BLVD & COLUMBIANA DR
100000395	6215	2	42.776972			
100000395	6215	3	56.590791			
100000395	6215	4	44.917963			
100000395	6215	5	44.838798			
100000395	6215	6	43.000328			
100000395	6215	7	43.114136			
100000395	6215	8	43.367216			
100000395	6215	9	57.683648			
100000395	6215	10	75.107594			
100000398	5101	1	0.23257	HARBISON BLVD	W	HARBISON BLVD & PARKRIDGE DR
100000398	5101	2	0.147773			
100000398	5101	3	0.212863			
100000398	5101	4	0.293617			
100000398	5101	5	0.211958			
100000398	5101	6	0.224397			
100000398	5101	7	0.137291			
100000398	5101	8	0.165781			
100000398	5101	9	0.249079			
100000398	5101	10	0.254633			
100000398	6267	1	9.242971	PARKRIDGE DR	SE	HARBISON BLVD & PARKRIDGE DR
100000398	6267	2	8.303547			
100000398	6267	3	10.479335			
100000398	6267	4	10.886597			
100000398	6267	5	9.152044			
100000398	6267	6	8.820459			
100000398	6267	7	9.259504			
100000398	6267	8	10.227242			
100000398	6267	9	9.349151			
100000398	6267	10	9.809992			
100000398	6268	1	3.931666	HARBISON BLVD	NE	HARBISON BLVD & PARKRIDGE DR
100000398	6268	2	3.528017			
100000398	6268	3	5.899545			
100000398	6268	4	4.789023			
100000398	6268	5	4.571629			
100000398	6268	6	4.39405			
100000398	6268	7	5.343142			
100000398	6268	8	5.305927			
100000398	6268	9	4.092111			
100000398	6268	10	4.696737			
100000399	5113	1	30.396856	PINEY GROVE RD	E	PINEY GROVE RD & FERNANDINA RD
100000399	5113	2	32.645352			
100000399	5113	3	35.80988			
100000399	5113	4	27.192862			
100000399	5113	5	30.150914			
100000399	5113	6	35.309072			
100000399	5113	7	32.928389			
100000399	5113	8	31.644543			
100000399	5113	9	28.644361			
100000399	5113	10	31.10545			
100000399	6263	1	18.97419	PINEY GROVE RD	W	PINEY GROVE RD & FERNANDINA RD
100000399	6263	2	19.06927			
100000399	6263	3	16.140151			
100000399	6263	4	16.606601			
100000399	6263	5	17.926293			
100000399	6263	6	21.958802			
100000399	6263	7	18.449351			
100000399	6263	8	17.351209			
100000399	6263	9	17.812372			
100000399	6263	10	20.550663			
100000399	6265	1	13.294635	FERNANDINA RD	SE	PINEY GROVE RD & FERNANDINA RD
100000399	6265	2	13.598404			
100000399	6265	3	12.058527			
100000399	6265	4	10.897289			
100000399	6265	5	11.486156			
100000399	6265	6	13.029108			
100000399	6265	7	12.064692			
100000399	6265	8	13.169836			
100000399	6265	9	12.821481			
100000399	6265	10	11.786276			
100000399	6266	1	60.444043	FERNANDINA RD	N	PINEY GROVE RD & FERNANDINA RD
100000399	6266	2	54.58992			
100000399	6266	3	63.83401			
100000399	6266	4	63.87557			
100000399	6266	5	54.855567			
100000399	6266	6	53.236952			
100000399	6266	7	57.261111			
100000399	6266	8	56.463458			
100000399	6266	9	52.816696			
100000399	6266	10	52.239506			
100000401	5093	1	20.020357	LAKE MURRAY BLVD	E	KINLEY RD, LAKE MURRAY BLVD & PARKRIDGE DR
100000401	5093	2	19.929159			
100000401	5093	3	19.464881			
100000401	5093	4	16.512908			
100000401	5093	5	17.700954			
100000401	5093	6	18.001235			
100000401	5093	7	19.719799			
100000401	5093	8	17.612364			
100000401	5093	9	20.608771			
100000401	5093	10	15.540433			
100000401	6276	1	219.855013	KINLEY RD	S	KINLEY RD, LAKE MURRAY BLVD & PARKRIDGE DR
100000401	6276	2	227.150892			
100000401	6276	3	460.462342			
100000401	6276	4	323.025592			
100000401	6276	5	345.546172			
100000401	6276	6	483.972553			
100000401	6276	7	250.935989			
100000401	6276	8	258.531048			
100000401	6276	9	372.88578			
100000401	6276	10	357.451854			

Node	Superlink	Run	Average Control Delay	Approach Street Name	Direction	Intersection
100000401	6313	1	242.637013	LAKE MURRAY BLVD	W	KINLEY RD, LAKE MURRAY BLVD & PARKRIDGE DR
100000401	6313	2	322.186827			
100000401	6313	3	481.804183			
100000401	6313	4	250.712142			
100000401	6313	5	340.323583			
100000401	6313	6	443.067344			
100000401	6313	7	281.607307			
100000401	6313	8	219.225438			
100000401	6313	9	392.720105			
100000401	6313	10	248.409194			
100000401	6556	1	103.249531	PARKRIDGE DR	N	KINLEY RD, LAKE MURRAY BLVD & PARKRIDGE DR
100000401	6556	2	166.335267			
100000401	6556	3	110.635425			
100000401	6556	4	84.02614			
100000401	6556	5	83.005999			
100000401	6556	6	142.354431			
100000401	6556	7	111.008944			
100000401	6556	8	61.585518			
100000401	6556	9	91.93374			
100000401	6556	10	46.499659			
100000438	2044	1	0	RAMP	SE	RAMP, SUNSET BLVD & I-20 EXIT 61 EB ON RAMP
100000438	2044	2	0			
100000438	2044	3	0			
100000438	2044	4	0			
100000438	2044	5	0			
100000438	2044	6	0			
100000438	2044	7	0			
100000438	2044	8	0			
100000438	2044	9	0			
100000438	2044	10	0			
100000438	5021	1	6.74139	SUNSET BLVD	NW	RAMP, SUNSET BLVD & I-20 EXIT 61 EB ON RAMP
100000438	5021	2	6.615194			
100000438	5021	3	6.294328			
100000438	5021	4	6.731214			
100000438	5021	5	7.52231			
100000438	5021	6	7.91728			
100000438	5021	7	6.07826			
100000438	5021	8	5.923778			
100000438	5021	9	6.829488			
100000438	5021	10	6.883761			
100000438	5023	1	0.757989	SUNSET BLVD	SE	RAMP, SUNSET BLVD & I-20 EXIT 61 EB ON RAMP
100000438	5023	2	0.618574			
100000438	5023	3	0.586577			
100000438	5023	4	0.661918			
100000438	5023	5	0.471049			
100000438	5023	6	0.430188			
100000438	5023	7	0.51929			
100000438	5023	8	0.558735			
100000438	5023	9	0.494289			
100000438	5023	10	0.439801			
100000446	2047	1	0	RAMP	S	RAMP & I-20 EXIT 63 WB ON RAMP
100000446	2047	2	0			
100000446	2047	3	0			
100000446	2047	4	0			
100000446	2047	5	0			
100000446	2047	6	0			
100000446	2047	7	0			
100000446	2047	8	0			
100000446	2047	9	0			
100000446	2047	10	0			
100000446	2059	1	0	RAMP	SW	RAMP & I-20 EXIT 63 WB ON RAMP
100000446	2059	2	0			
100000446	2059	3	0			
100000446	2059	4	0			
100000446	2059	5	0			
100000446	2059	6	0			
100000446	2059	7	0			
100000446	2059	8	0			
100000446	2059	9	0			
100000446	2059	10	0			
100000450	2060	1	0	RAMP	E	BUSH RIVER RD, RAMP & I-20 EXIT 63 EB ON RAMP
100000450	2060	2	0			
100000450	2060	3	0			
100000450	2060	4	0			
100000450	2060	5	0			
100000450	2060	6	0			
100000450	2060	7	0			
100000450	2060	8	0			
100000450	2060	9	0			
100000450	2060	10	0			
100000450	5037	1	0	BUSH RIVER RD	E	BUSH RIVER RD, RAMP & I-20 EXIT 63 EB ON RAMP
100000450	5037	2	0			
100000450	5037	3	0			
100000450	5037	4	0			
100000450	5037	5	0			
100000450	5037	6	0			
100000450	5037	7	0			
100000450	5037	8	0			
100000450	5037	9	0			
100000450	5037	10	0			
100000450	5038	1	1.192028	BUSH RIVER RD	NW	BUSH RIVER RD, RAMP & I-20 EXIT 63 EB ON RAMP
100000450	5038	2	1.090244			
100000450	5038	3	1.247748			
100000450	5038	4	1.232129			
100000450	5038	5	1.496308			
100000450	5038	6	1.714567			
100000450	5038	7	1.225566			
100000450	5038	8	1.434189			
100000450	5038	9	1.207043			
100000450	5038	10	1.028563			
100000452	2071	1	31.867651	RAMP	W	RAMP & BUSH RIVER RD
100000452	2071	2	30.550351			
100000452	2071	3	33.171616			
100000452	2071	4	30.87661			
100000452	2071	5	35.075504			
100000452	2071	6	31.423638			
100000452	2071	7	29.472391			
100000452	2071	8	32.358839			
100000452	2071	9	32.31365			
100000452	2071	10	30.668593			
100000452	5034	1	0.922991	BUSH RIVER RD	NW	RAMP & BUSH RIVER RD
100000452	5034	2	1.390536			

Node	Superlink	Run	Average Control Delay	Approach Street Name	Direction	Intersection
100000452	5034	3	1.107066			
100000452	5034	4	0.776			
100000452	5034	5	1.048242			
100000452	5034	6	0.90206			
100000452	5034	7	0.684304			
100000452	5034	8	0.97009			
100000452	5034	9	0.817379			
100000452	5034	10	1.110803			
100000452	5457	1	2.611615	BUSH RIVER RD	SE	RAMP & BUSH RIVER RD
100000452	5457	2	2.467553			
100000452	5457	3	2.748207			
100000452	5457	4	2.046874			
100000452	5457	5	3.174971			
100000452	5457	6	2.087063			
100000452	5457	7	2.091311			
100000452	5457	8	2.077493			
100000452	5457	9	2.568623			
100000452	5457	10	2.545829			
100000455	5457	1	5.28501	BUSH RIVER RD	NW	FRONTAGE RD & BUSH RIVER RD
100000455	5457	2	5.901052			
100000455	5457	3	5.645305			
100000455	5457	4	5.31861			
100000455	5457	5	5.266527			
100000455	5457	6	5.339527			
100000455	5457	7	4.983817			
100000455	5457	8	5.098941			
100000455	5457	9	5.415672			
100000455	5457	10	5.403315			
100000455	6538	1	41.987897	FRONTAGE RD	SW	FRONTAGE RD & BUSH RIVER RD
100000455	6538	2	39.235469			
100000455	6538	3	37.43251			
100000455	6538	4	38.368414			
100000455	6538	5	42.95127			
100000455	6538	6	40.867632			
100000455	6538	7	36.216845			
100000455	6538	8	38.430407			
100000455	6538	9	40.311214			
100000455	6538	10	39.428765			
100000455	6539	1	9.093401	BUSH RIVER RD	SE	FRONTAGE RD & BUSH RIVER RD
100000455	6539	2	11.648438			
100000455	6539	3	11.164005			
100000455	6539	4	9.211769			
100000455	6539	5	10.50301			
100000455	6539	6	9.065275			
100000455	6539	7	7.8085			
100000455	6539	8	8.458337			
100000455	6539	9	8.96174			
100000455	6539	10	10.199298			
100000467	3225	1		RAMP	SW	RAMP & I-126 WB ON RAMP FROM GREYSTONE BLVD
100000467	3225	2				
100000467	3225	3				
100000467	3225	4				
100000467	3225	5				
100000467	3225	6				
100000467	3225	7				
100000467	3225	8				
100000467	3225	9				
100000467	3225	10				
100000467	3238	1	0	RAMP	W	RAMP & I-126 WB ON RAMP FROM GREYSTONE BLVD
100000467	3238	2	0			
100000467	3238	3	0			
100000467	3238	4	0			
100000467	3238	5	0			
100000467	3238	6	0			
100000467	3238	7	0			
100000467	3238	8	0			
100000467	3238	9	0			
100000467	3238	10	0			
100000468	3228	1	0	EXIT 103 WB ON RAMP	NW	EXIT 103 WB ON RAMP & I-26 EXIT 103 WB ON RAMP
100000468	3228	2	0			
100000468	3228	3	0			
100000468	3228	4	0			
100000468	3228	5	0			
100000468	3228	6	0			
100000468	3228	7	0			
100000468	3228	8	0			
100000468	3228	9	0			
100000468	3228	10	0			
100000468	3241	1	0	EXIT 103 WB ON RAMP	W	EXIT 103 WB ON RAMP & I-26 EXIT 103 WB ON RAMP
100000468	3241	2	0			
100000468	3241	3	0			
100000468	3241	4	0			
100000468	3241	5	0			
100000468	3241	6	0			
100000468	3241	7	0			
100000468	3241	8	0			
100000468	3241	9	0			
100000468	3241	10	0			
100000476	3257	1	0	RAMP	N	RAMP
100000476	3257	2	0			
100000476	3257	3	0			
100000476	3257	4	0			
100000476	3257	5	0			
100000476	3257	6	0			
100000476	3257	7	0			
100000476	3257	8	0			
100000476	3257	9	0			
100000476	3257	10	0			
100000476	3262	1	0	RAMP	N	RAMP
100000476	3262	2	0			
100000476	3262	3	0			
100000476	3262	4	0			
100000476	3262	5	0			
100000476	3262	6	0			
100000476	3262	7	0			
100000476	3262	8	0			
100000476	3262	9	0			
100000476	3262	10	0			
100000494	3302	1	0	EXIT 106 WB ON RAMP	NW	EXIT 106 WB ON RAMP & I-26 EXIT 106 WB ON RAMP
100000494	3302	2	0			
100000494	3302	3	0			
100000494	3302	4	0			

Node	Superlink	Run	Average Control Delay	Approach Street Name	Direction	Intersection
100000494	3302	5	0			
100000494	3302	6	0			
100000494	3302	7	0			
100000494	3302	8	0			
100000494	3302	9	0			
100000494	3302	10	0			
100000494	3306	1	0	EXIT 106 WB ON RAMP	NW	EXIT 106 WB ON RAMP & I-26 EXIT 106 WB ON RAMP
100000494	3306	2	0			
100000494	3306	3	0			
100000494	3306	4	0			
100000494	3306	5	0			
100000494	3306	6	0			
100000494	3306	7	0			
100000494	3306	8	0			
100000494	3306	9	0			
100000494	3306	10	0			
100000497	3310	1	0	RAMP	SE	RAMP & I-26 EXIT 104 EB ON RAMP
100000497	3310	2	0			
100000497	3310	3	0			
100000497	3310	4	0			
100000497	3310	5	0			
100000497	3310	6	0			
100000497	3310	7	0			
100000497	3310	8	0			
100000497	3310	9	0			
100000497	3310	10	0			
100000497	6545	1	0	RAMP	SE	RAMP & I-26 EXIT 104 EB ON RAMP
100000497	6545	2	0			
100000497	6545	3	0			
100000497	6545	4	0			
100000497	6545	5	0			
100000497	6545	6	0			
100000497	6545	7	0			
100000497	6545	8	0			
100000497	6545	9	0			
100000497	6545	10	0			
100000503	3325	1	0	RAMP	SE	RAMP, 6472 (W) & I-26 EXIT 103 EB ON RAMP
100000503	3325	2	0			
100000503	3325	3	0			
100000503	3325	4	0			
100000503	3325	5	0			
100000503	3325	6	0			
100000503	3325	7	0			
100000503	3325	8	0			
100000503	3325	9	0			
100000503	3325	10	0			
100000503	6472	1	0		E	RAMP, 6472 (W) & I-26 EXIT 103 EB ON RAMP
100000503	6472	2	0			
100000503	6472	3	0			
100000503	6472	4	0			
100000503	6472	5	0			
100000503	6472	6	0			
100000503	6472	7	0			
100000503	6472	8	0			
100000503	6472	9	0			
100000503	6472	10	0			
100000520	3345	1		EXIT 102 WB ON RAMP	N	EXIT 102 WB ON RAMP & I-26 EXIT 102 WB ON RAMP
100000520	3345	2				
100000520	3345	3				
100000520	3345	4				
100000520	3345	5				
100000520	3345	6				
100000520	3345	7				
100000520	3345	8				
100000520	3345	9				
100000520	3345	10				
100000520	3350	1	0	EXIT 102 WB ON RAMP	N	EXIT 102 WB ON RAMP & I-26 EXIT 102 WB ON RAMP
100000520	3350	2	0			
100000520	3350	3	0			
100000520	3350	4	0			
100000520	3350	5	0			
100000520	3350	6	0			
100000520	3350	7	0			
100000520	3350	8	0			
100000520	3350	9	0			
100000520	3350	10	0			
100000523	3355	1	0	ON-RAMP from WB	S	ON-RAMP from WB, ON-RAMP from EB & I-26 EXIT 101 EB ON RAMP
100000523	3355	2	0			
100000523	3355	3	0			
100000523	3355	4	0			
100000523	3355	5	0			
100000523	3355	6	0			
100000523	3355	7	0			
100000523	3355	8	0			
100000523	3355	9	0			
100000523	3355	10	0			
100000523	3356	1	0	ON-RAMP from EB	S	ON-RAMP from WB, ON-RAMP from EB & I-26 EXIT 101 EB ON RAMP
100000523	3356	2	0			
100000523	3356	3	0			
100000523	3356	4	0			
100000523	3356	5	0			
100000523	3356	6	0			
100000523	3356	7	0			
100000523	3356	8	0			
100000523	3356	9	0			
100000523	3356	10	0			
100000528	3360	1		EXIT 101 WB ON RAMP	N	EXIT 101 WB ON RAMP & I-26 EXIT 101 WB ON RAMP
100000528	3360	2				
100000528	3360	3				
100000528	3360	4				
100000528	3360	5				
100000528	3360	6				
100000528	3360	7				
100000528	3360	8				
100000528	3360	9				
100000528	3360	10				
100000528	3364	1	0	EXIT 101 WB ON RAMP	N	EXIT 101 WB ON RAMP & I-26 EXIT 101 WB ON RAMP
100000528	3364	2	0			
100000528	3364	3	0			
100000528	3364	4	0			
100000528	3364	5	0			
100000528	3364	6	0			

Node	Superlink	Run	Average Control Delay	Approach Street Name	Direction	Intersection
100000528	3364	7	0			
100000528	3364	8	0			
100000528	3364	9	0			
100000528	3364	10	0			
100000702	4338	1	0	RAMP	SW	RAMP & I-20 EXIT 65 WB ON RAMP
100000702	4338	2	0			
100000702	4338	3	0			
100000702	4338	4	0			
100000702	4338	5	0			
100000702	4338	6	0			
100000702	4338	7	0			
100000702	4338	8	0			
100000702	4338	9	0			
100000702	4338	10	0			
100000702	4343	1	0	RAMP	SW	RAMP & I-20 EXIT 65 WB ON RAMP
100000702	4343	2	0			
100000702	4343	3	0			
100000702	4343	4	0			
100000702	4343	5	0			
100000702	4343	6	0			
100000702	4343	7	0			
100000702	4343	8	0			
100000702	4343	9	0			
100000702	4343	10	0			
100000707	5166	1	0	MONTICELLO RD	NW	MONTICELLO RD, SERVICE RD & RAMP
100000707	5166	2	0			
100000707	5166	3	0			
100000707	5166	4	0			
100000707	5166	5	0			
100000707	5166	6	0			
100000707	5166	7	0			
100000707	5166	8	0			
100000707	5166	9	0			
100000707	5166	10	0			
100000707	5168	1	0	SERVICE RD	W	MONTICELLO RD, SERVICE RD & RAMP
100000707	5168	2	0			
100000707	5168	3	0			
100000707	5168	4	0			
100000707	5168	5	0			
100000707	5168	6	0			
100000707	5168	7	0			
100000707	5168	8	0			
100000707	5168	9	0			
100000707	5168	10	0			
100000707	5174	1	0.729677	MONTICELLO RD	SE	MONTICELLO RD, SERVICE RD & RAMP
100000707	5174	2	1.015817			
100000707	5174	3	0.576864			
100000707	5174	4	0.576736			
100000707	5174	5	0.794467			
100000707	5174	6	0.872014			
100000707	5174	7	0.812204			
100000707	5174	8	0.824575			
100000707	5174	9	0.627749			
100000707	5174	10	1.181917			
100000709	4352	1	0	RAMP	S	RAMP & I-20 EXIT 68 WB ON RAMP
100000709	4352	2	0			
100000709	4352	3	0			
100000709	4352	4	0			
100000709	4352	5	0			
100000709	4352	6	0			
100000709	4352	7	0			
100000709	4352	8	0			
100000709	4352	9	0			
100000709	4352	10	0			
100000709	4353	1	0	RAMP	S	RAMP & I-20 EXIT 68 WB ON RAMP
100000709	4353	2	0			
100000709	4353	3	0			
100000709	4353	4	0			
100000709	4353	5	0			
100000709	4353	6	0			
100000709	4353	7	0			
100000709	4353	8	0			
100000709	4353	9	0			
100000709	4353	10	0			
100000710	4356	1	0	I-20 EXIT 68 WB OFF RAMP	W	I-20 EXIT 68 WB OFF RAMP & SERVICE RD
100000710	4356	2	0			
100000710	4356	3	0			
100000710	4356	4	0			
100000710	4356	5	0			
100000710	4356	6	0			
100000710	4356	7	0			
100000710	4356	8	0			
100000710	4356	9	0			
100000710	4356	10	0			
100000712	5157	1	0.078861	BUCKNER RD	NE	BUCKNER RD & RAMP
100000712	5157	2	0.098134			
100000712	5157	3	0.181395			
100000712	5157	4	0.078087			
100000712	5157	5	0.103494			
100000712	5157	6	0.077931			
100000712	5157	7	0.067669			
100000712	5157	8	0.082213			
100000712	5157	9	0.103334			
100000712	5157	10	0.061262			
100000712	5160	1	17.218192	BUCKNER RD	SW	BUCKNER RD & RAMP
100000712	5160	2	16.769751			
100000712	5160	3	16.142209			
100000712	5160	4	18.677082			
100000712	5160	5	15.009422			
100000712	5160	6	17.335027			
100000712	5160	7	14.22525			
100000712	5160	8	17.159631			
100000712	5160	9	15.233838			
100000712	5160	10	15.333256			
100000804	6261	1	17.507968	TRAM RD	SW	TRAM RD & SIDNEY RD
100000804	6261	2	18.906764			
100000804	6261	3	14.051166			
100000804	6261	4	16.359853			
100000804	6261	5	12.725731			
100000804	6261	6	16.573497			
100000804	6261	7	17.987564			
100000804	6261	8	17.074291			

Node	Superlink	Run	Average Control Delay	Approach Street Name	Direction	Intersection
100000804	6261	9	16.392725			
100000804	6261	10	19.446798			
100000804	6457	1	136.656962	SIDNEY RD	NW	TRAM RD & SIDNEY RD
100000804	6457	2	48.195164			
100000804	6457	3	138.183428			
100000804	6457	4	171.152737			
100000804	6457	5	76.606458			
100000804	6457	6	45.999087			
100000804	6457	7	120.955415			
100000804	6457	8	140.764117			
100000804	6457	9	150.48536			
100000804	6457	10	94.412919			
100000804	6458	1	1.554957	TRAM RD	NE	TRAM RD & SIDNEY RD
100000804	6458	2	2.218723			
100000804	6458	3	2.439558			
100000804	6458	4	1.696409			
100000804	6458	5	1.942834			
100000804	6458	6	1.654411			
100000804	6458	7	2.262756			
100000804	6458	8	2.436773			
100000804	6458	9	1.941072			
100000804	6458	10	1.852732			
100000882	5151	1		SERVICE RD	SW	SERVICE RD, 6449 (S) & 6448 (W)
100000882	5151	2				
100000882	5151	3				
100000882	5151	4				
100000882	5151	5				
100000882	5151	6				
100000882	5151	7				
100000882	5151	8				
100000882	5151	9				
100000882	5151	10				
100000882	6446	1	0	SERVICE RD	NE	SERVICE RD, 6449 (S) & 6448 (W)
100000882	6446	2	0			
100000882	6446	3	0			
100000882	6446	4	0			
100000882	6446	5	0			
100000882	6446	6	0			
100000882	6446	7	0			
100000882	6446	8	0			
100000882	6446	9	0			
100000882	6446	10	0			
100000882	6449	1	0		N	SERVICE RD, 6449 (S) & 6448 (W)
100000882	6449	2	0			
100000882	6449	3	0			
100000882	6449	4	0			
100000882	6449	5	0			
100000882	6449	6	0			
100000882	6449	7	0			
100000882	6449	8	0			
100000882	6449	9	0			
100000882	6449	10	0			
100000883	5148	1	0	BROAD RIVER RD	NW	BROAD RIVER RD & 6448 (E)
100000883	5148	2	0.000008			
100000883	5148	3	0			
100000883	5148	4	0			
100000883	5148	5	0			
100000883	5148	6	0			
100000883	5148	7	0			
100000883	5148	8	0			
100000883	5148	9	0.000083			
100000883	5148	10	0			
100000883	6447	1	11.819467	BROAD RIVER RD	SE	BROAD RIVER RD & 6448 (E)
100000883	6447	2	9.652521			
100000883	6447	3	7.076341			
100000883	6447	4	7.352031			
100000883	6447	5	10.382646			
100000883	6447	6	10.002515			
100000883	6447	7	9.018406			
100000883	6447	8	7.974463			
100000883	6447	9	7.419345			
100000883	6447	10	8.013883			
100000883	6448	1			W	BROAD RIVER RD & 6448 (E)
100000883	6448	2				
100000883	6448	3				
100000883	6448	4				
100000883	6448	5				
100000883	6448	6				
100000883	6448	7				
100000883	6448	8				
100000883	6448	9				
100000883	6448	10				
100000895	3229	1	0	RAMP	SW	RAMP & PINEY GROVE RD
100000895	3229	2	0			
100000895	3229	3	0			
100000895	3229	4	0			
100000895	3229	5	0			
100000895	3229	6	0			
100000895	3229	7	0			
100000895	3229	8	0			
100000895	3229	9	0			
100000895	3229	10	0			
100000895	6543	1	1.288708	PINEY GROVE RD	E	RAMP & PINEY GROVE RD
100000895	6543	2	1.273811			
100000895	6543	3	0.991979			
100000895	6543	4	1.337079			
100000895	6543	5	2.02064			
100000895	6543	6	1.295401			
100000895	6543	7	1.203508			
100000895	6543	8	1.6825			
100000895	6543	9	1.227096			
100000895	6543	10	1.132836			
100000895	6544	1	0	PINEY GROVE RD	W	RAMP & PINEY GROVE RD
100000895	6544	2	0			
100000895	6544	3	0			
100000895	6544	4	0			
100000895	6544	5	0			
100000895	6544	6	0			
100000895	6544	7	0			
100000895	6544	8	0			
100000895	6544	9	0			
100000895	6544	10	0			

Node	Superlink	Run	Average Control Delay	Approach Street Name	Direction	Intersection
100000897	3243	1	8.888498	I-126 WB OFF RAMP TO COLONIAL LIFE BLVD	NE	I-126 WB OFF RAMP TO COLONIAL LIFE BLVD, W COLONIAL LIFE BLVD, COLONIAL LIFE BLVD W & I-126 EB ON RA
100000897	3243	2	7.028221			
100000897	3243	3	8.42071			
100000897	3243	4	8.301022			
100000897	3243	5	7.205745			
100000897	3243	6	8.617292			
100000897	3243	7	7.503696			
100000897	3243	8	7.962131			
100000897	3243	9	7.672044			
100000897	3243	10	4.970425			
100000897	5134	1	15.729334	W COLONIAL LIFE BLVD	NW	I-126 WB OFF RAMP TO COLONIAL LIFE BLVD, W COLONIAL LIFE BLVD, COLONIAL LIFE BLVD W & I-126 EB ON RA
100000897	5134	2	14.854235			
100000897	5134	3	14.941788			
100000897	5134	4	15.807195			
100000897	5134	5	14.603481			
100000897	5134	6	15.467938			
100000897	5134	7	18.458757			
100000897	5134	8	12.743407			
100000897	5134	9	13.391882			
100000897	5134	10	10.79374			
100000897	6471	1	0.754709	COLONIAL LIFE BLVD W	S	I-126 WB OFF RAMP TO COLONIAL LIFE BLVD, W COLONIAL LIFE BLVD, COLONIAL LIFE BLVD W & I-126 EB ON RA
100000897	6471	2	0.761692			
100000897	6471	3	0.745156			
100000897	6471	4	0.610372			
100000897	6471	5	0.773248			
100000897	6471	6	0.658531			
100000897	6471	7	0.678584			
100000897	6471	8	0.715637			
100000897	6471	9	0.668658			
100000897	6471	10	0.666223			
100000898	51	1	247.965133	I-26 EXIT 108 EB OFF RAMP	S	I-26 EXIT 108 EB OFF RAMP, BUSH RIVER RD & RAMP
100000898	51	2	319.126812			
100000898	51	3	265.931915			
100000898	51	4	283.965294			
100000898	51	5	298.295647			
100000898	51	6	299.509404			
100000898	51	7	311.744456			
100000898	51	8	239.505534			
100000898	51	9	289.562744			
100000898	51	10	273.877138			
100000898	5130	1	21.419609	BUSH RIVER RD	N	I-26 EXIT 108 EB OFF RAMP, BUSH RIVER RD & RAMP
100000898	5130	2	31.287323			
100000898	5130	3	27.491911			
100000898	5130	4	21.943876			
100000898	5130	5	26.266561			
100000898	5130	6	16.555538			
100000898	5130	7	32.353734			

Node	Superlink	Run	Average Control Delay	Approach Street Name	Direction	Intersection
100000898	5130	8	16.872485			
100000898	5130	9	21.844962			
100000898	5130	10	19.017215			
100000898	5131	1	9.739128	BUSH RIVER RD	E	I-26 EXIT 108 EB OFF RAMP, BUSH RIVER RD & RAMP
100000898	5131	2	8.596973			
100000898	5131	3	9.977445			
100000898	5131	4	10.274809			
100000898	5131	5	9.780867			
100000898	5131	6	8.026924			
100000898	5131	7	11.336081			
100000898	5131	8	7.362272			
100000898	5131	9	8.474693			
100000898	5131	10	8.604491			
100000898	6503	1	10.273072	BUSH RIVER RD	W	I-26 EXIT 108 EB OFF RAMP, BUSH RIVER RD & RAMP
100000898	6503	2	9.793689			
100000898	6503	3	10.72404			
100000898	6503	4	10.98909			
100000898	6503	5	11.172484			
100000898	6503	6	11.936798			
100000898	6503	7	11.630302			
100000898	6503	8	11.388964			
100000898	6503	9	11.324324			
100000898	6503	10	10.349658			
100000899	3298	1	5.619797	EXIT 106 WB OFF RAMP	SE	EXIT 106 WB OFF RAMP & BURNING TREE RD
100000899	3298	2	5.629227			
100000899	3298	3	5.997469			
100000899	3298	4	6.143656			
100000899	3298	5	5.472261			
100000899	3298	6	6.626501			
100000899	3298	7	5.279338			
100000899	3298	8	5.800094			
100000899	3298	9	6.472663			
100000899	3298	10	5.506714			
100000899	6105	1	0	BURNING TREE RD	S	EXIT 106 WB OFF RAMP & BURNING TREE RD
100000899	6105	2	0			
100000899	6105	3	0			
100000899	6105	4	0			
100000899	6105	5	0			
100000899	6105	6	0			
100000899	6105	7	0			
100000899	6105	8	0			
100000899	6105	9	0			
100000899	6105	10	0			
100000899	6106	1	0	BURNING TREE RD	N	EXIT 106 WB OFF RAMP & BURNING TREE RD
100000899	6106	2	0			
100000899	6106	3	0			
100000899	6106	4	0			
100000899	6106	5	0			
100000899	6106	6	0			
100000899	6106	7	0			
100000899	6106	8	0			
100000899	6106	9	0			
100000899	6106	10	0			
100000902	4292	1	26.781956	EXIT 110 WB OFF RAMP	NE	SUNSET BLVD, EXIT 110 WB OFF RAMP & EXIT 108 WB ON RAMP
100000902	4292	2	31.810166			
100000902	4292	3	27.463433			
100000902	4292	4	23.088875			
100000902	4292	5	28.80056			
100000902	4292	6	21.777421			
100000902	4292	7	26.297045			
100000902	4292	8	26.312932			
100000902	4292	9	23.329886			
100000902	4292	10	27.543705			
100000902	4947	1	4.846664	SUNSET BLVD	W	SUNSET BLVD, EXIT 110 WB OFF RAMP & EXIT 108 WB ON RAMP
100000902	4947	2	6.123039			
100000902	4947	3	5.882064			
100000902	4947	4	5.513152			
100000902	4947	5	5.220174			
100000902	4947	6	5.371592			
100000902	4947	7	7.458355			
100000902	4947	8	5.560451			
100000902	4947	9	5.643124			
100000902	4947	10	5.344164			
100000902	4951	1	0.013157	SUNSET BLVD	E	SUNSET BLVD, EXIT 110 WB OFF RAMP & EXIT 108 WB ON RAMP
100000902	4951	2	0.014833			
100000902	4951	3	0.018715			
100000902	4951	4	0.031547			
100000902	4951	5	0.023731			
100000902	4951	6	0.017488			
100000902	4951	7	0.02308			
100000902	4951	8	0.035681			
100000902	4951	9	0.018949			
100000902	4951	10	0.018098			
100000903	4289	1	53.24679	EXIT 110 WB OFF RAMP	NW	RAMP, SUNSET BLVD, EXIT 110 WB OFF RAMP & EXIT 108 WB ON RAMP
100000903	4289	2	54.838826			
100000903	4289	3	50.621824			
100000903	4289	4	51.522271			
100000903	4289	5	50.293407			
100000903	4289	6	52.131527			
100000903	4289	7	53.976512			
100000903	4289	8	49.981654			
100000903	4289	9	50.128758			
100000903	4289	10	49.204318			
100000903	4298	1	43.974326	RAMP	SE	RAMP, SUNSET BLVD, EXIT 110 WB OFF RAMP & EXIT 108 WB ON RAMP
100000903	4298	2	42.176602			
100000903	4298	3	37.497237			
100000903	4298	4	42.436676			
100000903	4298	5	44.196161			
100000903	4298	6	43.376722			
100000903	4298	7	37.710596			
100000903	4298	8	42.311159			
100000903	4298	9	40.183741			
100000903	4298	10	38.495972			
100000903	4950	1	19.763856	SUNSET BLVD	E	RAMP, SUNSET BLVD, EXIT 110 WB OFF RAMP & EXIT 108 WB ON RAMP
100000903	4950	2	18.244516			
100000903	4950	3	19.188991			
100000903	4950	4	20.623935			
100000903	4950	5	18.960787			
100000903	4950	6	19.556103			
100000903	4950	7	18.415283			
100000903	4950	8	19.462562			
100000903	4950	9	20.298494			

Node	Superlink	Run	Average Control Delay	Approach Street Name	Direction	Intersection
100000903	4950	10	19.276835			
100000903	4951	1	16.156539	SUNSET BLVD	W	RAMP, SUNSET BLVD, EXIT 110 WB OFF RAMP & EXIT 108 WB ON RAMP
100000903	4951	2	17.204086			
100000903	4951	3	17.022901			
100000903	4951	4	17.46827			
100000903	4951	5	15.701195			
100000903	4951	6	15.91191			
100000903	4951	7	16.911996			
100000903	4951	8	17.073415			
100000903	4951	9	17.332394			
100000903	4951	10	16.044547			

2040 No-Build AM

Node	Superlink	Run	Average Control Delay	Approach Street Name	Direction	Intersection
4	5081	1	3.669287	BROAD RIVER RD	W	WESTERN LN & BROAD RIVER RD
4	5081	2	4.084377			
4	5081	3	3.452328			
4	5081	4	4.4729			
4	5081	5	3.43626			
4	5081	6	3.794515			
4	5081	7	3.340191			
4	5081	8	4.644486			
4	5081	9	3.848753			
4	5081	10	4.181383			
4	6465	1	6.793653	WESTERN LN	S	WESTERN LN & BROAD RIVER RD
4	6465	2	6.365041			
4	6465	3	7.016826			
4	6465	4	6.584901			
4	6465	5	6.579586			
4	6465	6	6.537121			
4	6465	7	6.752842			
4	6465	8	6.527694			
4	6465	9	6.586134			
4	6465	10	6.560754			
4	6466	1	4.791612	BROAD RIVER RD	E	WESTERN LN & BROAD RIVER RD
4	6466	2	4.938805			
4	6466	3	5.309273			
4	6466	4	5.094533			
4	6466	5	5.121975			
4	6466	6	4.5785			
4	6466	7	5.296047			
4	6466	8	4.783436			
4	6466	9	4.758704			
4	6466	10	4.757214			
4	6467	1	7.121773	WESTERN LN	N	WESTERN LN & BROAD RIVER RD
4	6467	2	7.094426			
4	6467	3	7.093047			
4	6467	4	8.009622			
4	6467	5	7.49505			
4	6467	6	8.033057			
4	6467	7	7.830043			
4	6467	8	7.818272			
4	6467	9	7.260993			
4	6467	10	7.139836			
11	5487	1	0	MORNINGHILL DR	N	MORNINGHILL DR & BURNETTE DR
11	5487	2	0			
11	5487	3	0			
11	5487	4	0			
11	5487	5	0			
11	5487	6	0			
11	5487	7	0			
11	5487	8	0			
11	5487	9	0			
11	5487	10	0			
11	6536	1		MORNINGHILL DR	S	MORNINGHILL DR & BURNETTE DR
11	6536	2				
11	6536	3				
11	6536	4				
11	6536	5				
11	6536	6				
11	6536	7				
11	6536	8				
11	6536	9				
11	6536	10				
11	6537	1	0	BURNETTE DR	E	MORNINGHILL DR & BURNETTE DR
11	6537	2	0			
11	6537	3	0			
11	6537	4	0			
11	6537	5	0			
11	6537	6	0			
11	6537	7	0			
11	6537	8	0			
11	6537	9	0			
11	6537	10	0			
26	5488	1	0	RAMP	S	RAMP & 6502 (NW)
26	5488	2	0			
26	5488	3	0			
26	5488	4	0			
26	5488	5	0			
26	5488	6	0			
26	5488	7	0			
26	5488	8	0			
26	5488	9	0			
26	5488	10	0			
26	6501	1	12.934632	RAMP	N	RAMP & 6502 (NW)
26	6501	2	13.186299			
26	6501	3	11.811664			
26	6501	4	11.781505			
26	6501	5	12.291603			
26	6501	6	11.428652			
26	6501	7	13.93254			
26	6501	8	13.521901			
26	6501	9	10.224434			
26	6501	10	12.634152			
26	6502	1	0		SE	RAMP & 6502 (NW)
26	6502	2	0			
26	6502	3	0			
26	6502	4	0			

Node	Superlink	Run	Average Control Delay	Approach Street Name	Direction	Intersection
26	6502	5	0			
26	6502	6	0			
26	6502	7	0			
26	6502	8	0			
26	6502	9	0			
26	6502	10	0			
28	5140	1	0	GREYSTONE BLVD	S	GREYSTONE BLVD & CANDI LN
28	5140	2	0			
28	5140	3	0			
28	5140	4	0			
28	5140	5	0			
28	5140	6	0			
28	5140	7	0			
28	5140	8	0			
28	5140	9	0			
28	5140	10	0			
28	6506	1	6.830887	GREYSTONE BLVD	W	GREYSTONE BLVD & CANDI LN
28	6506	2	6.410245			
28	6506	3	6.592754			
28	6506	4	6.30098			
28	6506	5	6.620824			
28	6506	6	6.372267			
28	6506	7	6.39434			
28	6506	8	6.074121			
28	6506	9	6.147795			
28	6506	10	6.729483			
28	6507	1		CANDI LN	E	GREYSTONE BLVD & CANDI LN
28	6507	2				
28	6507	3				
28	6507	4				
28	6507	5				
28	6507	6				
28	6507	7				
28	6507	8				
28	6507	9				
28	6507	10				
41	6518	1	3.76719	BROAD RIVER RD	NW	DUTCH SQUARE BLVD & BROAD RIVER RD
41	6518	2	2.936637			
41	6518	3	3.769331			
41	6518	4	2.414624			
41	6518	5	3.548469			
41	6518	6	2.823736			
41	6518	7	2.324855			
41	6518	8	1.792291			
41	6518	9	2.888322			
41	6518	10	2.800931			
41	6519	1	39.442664	DUTCH SQUARE BLVD	E	DUTCH SQUARE BLVD & BROAD RIVER RD
41	6519	2	38.887892			
41	6519	3	39.530782			
41	6519	4	33.633395			
41	6519	5	36.712273			
41	6519	6	37.52298			
41	6519	7	37.354197			
41	6519	8	39.609735			
41	6519	9	39.440208			
41	6519	10	35.661096			
41	6521	1	0.913147	BROAD RIVER RD	SE	DUTCH SQUARE BLVD & BROAD RIVER RD
41	6521	2	1.17955			
41	6521	3	0.847223			
41	6521	4	1.03947			
41	6521	5	1.337208			
41	6521	6	1.276886			
41	6521	7	0.858162			
41	6521	8	1.285718			
41	6521	9	0.993697			
41	6521	10	1.225601			
43	6519	1	0	DUTCH SQUARE BLVD	W	DUTCH SQUARE BLVD & 6522 (N)
43	6519	2				
43	6519	3				
43	6519	4	0			
43	6519	5				
43	6519	6				
43	6519	7				
43	6519	8				
43	6519	9				
43	6519	10				
43	6520	1	20.811615	DUTCH SQUARE BLVD	E	DUTCH SQUARE BLVD & 6522 (N)
43	6520	2	19.590095			
43	6520	3	23.06417			
43	6520	4	20.969446			
43	6520	5	21.883161			
43	6520	6	20.363243			
43	6520	7	17.418879			
43	6520	8	14.907046			
43	6520	9	18.839508			
43	6520	10	18.239908			
43	6522	1	0		SW	DUTCH SQUARE BLVD & 6522 (N)
43	6522	2	0			
43	6522	3	0			
43	6522	4	0			
43	6522	5	0			
43	6522	6	0			
43	6522	7	0			
43	6522	8	0			
43	6522	9	0			
43	6522	10	0			
46	6273	1	0	PARKRIDGE DR	NE	PARKRIDGE DR & 6555 (NE)
46	6273	2	0			
46	6273	3	0			
46	6273	4	0			
46	6273	5	0			
46	6273	6	0			
46	6273	7	0			
46	6273	8	0			
46	6273	9	0			
46	6273	10	0			
46	6555	1			SW	PARKRIDGE DR & 6555 (NE)
46	6555	2				
46	6555	3				

Node	Superlink	Run	Average Control Delay	Approach Street Name	Direction	Intersection
46	6555	4				
46	6555	5				
46	6555	6				
46	6555	7				
46	6555	8				
46	6555	9				
46	6555	10				
46	6556	1	28.560532	PARKRIDGE DR	SE	PARKRIDGE DR & 6555 (NE)
46	6556	2	22.703358			
46	6556	3	25.631848			
46	6556	4	24.420449			
46	6556	5	24.762			
46	6556	6	21.293745			
46	6556	7	21.854314			
46	6556	8	30.993588			
46	6556	9	28.436273			
46	6556	10	24.716115			
100000012	5081	1	36.660363	BROAD RIVER RD	SE	KINLEY RD
100000012	5081	2	38.403295			
100000012	5081	3	38.992209			
100000012	5081	4	35.695969			
100000012	5081	5	55.85325			
100000012	5081	6	57.04366			
100000012	5081	7	50.478545			
100000012	5081	8	33.263207			
100000012	5081	9	34.186873			
100000012	5081	10	39.017612			
100000012	6276	1	35.780961	KINLEY RD	N	KINLEY RD
100000012	6276	2	46.698579			
100000012	6276	3	44.017707			
100000012	6276	4	34.338084			
100000012	6276	5	42.270577			
100000012	6276	6	56.075937			
100000012	6276	7	49.492549			
100000012	6276	8	48.093803			
100000012	6276	9	49.988833			
100000012	6276	10	51.141129			
100000012	6307	1	216.73377	KENNERLY RD	S	KINLEY RD
100000012	6307	2	205.498741			
100000012	6307	3	222.732029			
100000012	6307	4	212.497796			
100000012	6307	5	215.133894			
100000012	6307	6	214.598952			
100000012	6307	7	211.188204			
100000012	6307	8	205.697095			
100000012	6307	9	206.336797			
100000012	6307	10	192.259769			
100000012	6308	1	25.35171	BROAD RIVER RD	NW	KINLEY RD
100000012	6308	2	24.21928			
100000012	6308	3	27.603045			
100000012	6308	4	28.183547			
100000012	6308	5	26.342848			
100000012	6308	6	25.010968			
100000012	6308	7	27.300886			
100000012	6308	8	27.132588			
100000012	6308	9	29.127886			
100000012	6308	10	26.777104			
100000025	6267	1	0	PARKRIDGE DR	NW	CLUB RD & PARKRIDGE DR
100000025	6267	2	0			
100000025	6267	3	0			
100000025	6267	4	0			
100000025	6267	5	0			
100000025	6267	6	0			
100000025	6267	7	0			
100000025	6267	8	0			
100000025	6267	9	0			
100000025	6267	10	0			
100000025	6273	1	0	PARKRIDGE DR	SE	CLUB RD & PARKRIDGE DR
100000025	6273	2	0			
100000025	6273	3	0			
100000025	6273	4	0			
100000025	6273	5	0			
100000025	6273	6	0			
100000025	6273	7	0			
100000025	6273	8	0			
100000025	6273	9	0			
100000025	6273	10	0			
100000025	6304	1		CLUB RD	S	CLUB RD & PARKRIDGE DR
100000025	6304	2				
100000025	6304	3				
100000025	6304	4				
100000025	6304	5				
100000025	6304	6				
100000025	6304	7				
100000025	6304	8				
100000025	6304	9				
100000025	6304	10				
100000037	5101	1	18.179124	HARBISON BLVD	NE	BROAD RIVER RD & HARBISON BLVD
100000037	5101	2	19.847627			
100000037	5101	3	18.964314			
100000037	5101	4	19.81886			
100000037	5101	5	20.624681			
100000037	5101	6	20.954646			
100000037	5101	7	18.363276			
100000037	5101	8	20.410767			
100000037	5101	9	19.479723			
100000037	5101	10	18.571144			
100000037	6317	1	12.52772	BROAD RIVER RD	SE	BROAD RIVER RD & HARBISON BLVD
100000037	6317	2	11.371191			
100000037	6317	3	11.849976			
100000037	6317	4	11.766016			
100000037	6317	5	12.867558			
100000037	6317	6	15.357882			
100000037	6317	7	12.26273			
100000037	6317	8	10.250847			
100000037	6317	9	11.371564			
100000037	6317	10	12.200311			
100000037	6320	1	5.212357	BROAD RIVER RD	NW	BROAD RIVER RD & HARBISON BLVD
100000037	6320	2	5.422534			
100000037	6320	3	4.878209			

Node	Superlink	Run	Average Control Delay	Approach Street Name	Direction	Intersection
100000037	6320	4	4.727249			
100000037	6320	5	4.529463			
100000037	6320	6	5.737			
100000037	6320	7	4.345088			
100000037	6320	8	5.009992			
100000037	6320	9	5.635437			
100000037	6320	10	4.58337			
100000038	6232	1	0	BROAD RIVER RD	NW	BROAD RIVER RD & 6311 (S)
100000038	6232	2	0			
100000038	6232	3	0			
100000038	6232	4	0			
100000038	6232	5	0			
100000038	6232	6	0			
100000038	6232	7	0			
100000038	6232	8	0			
100000038	6232	9	0			
100000038	6232	10	0			
100000038	6311	1	5.322813		N	BROAD RIVER RD & 6311 (S)
100000038	6311	2	10.073665			
100000038	6311	3	17.347988			
100000038	6311	4	5.20909			
100000038	6311	5	14.657183			
100000038	6311	6	3.574841			
100000038	6311	7	9.724176			
100000038	6311	8	3.458295			
100000038	6311	9	6.235752			
100000038	6311	10	27.058842			
100000038	6312	1	0.078794	BROAD RIVER RD	SE	BROAD RIVER RD & 6311 (S)
100000038	6312	2	0			
100000038	6312	3	0			
100000038	6312	4	0.005424			
100000038	6312	5	0			
100000038	6312	6	0			
100000038	6312	7	0			
100000038	6312	8	0			
100000038	6312	9	0			
100000038	6312	10	0			
100000041	6281	1	0	LAKE MURRAY BLVD	W	LAKE MURRAY BLVD & 6311 (N)
100000041	6281	2	0			
100000041	6281	3	0			
100000041	6281	4	0			
100000041	6281	5	0			
100000041	6281	6	0			
100000041	6281	7	0			
100000041	6281	8	0			
100000041	6281	9	0			
100000041	6281	10	0			
100000041	6311	1	4.964755		SW	LAKE MURRAY BLVD & 6311 (N)
100000041	6311	2				
100000041	6311	3				
100000041	6311	4				
100000041	6311	5				
100000041	6311	6				
100000041	6311	7				
100000041	6311	8				
100000041	6311	9				
100000041	6311	10				
100000041	6313	1	0.108325	LAKE MURRAY BLVD	E	LAKE MURRAY BLVD & 6311 (N)
100000041	6313	2	0.027971			
100000041	6313	3	0.041584			
100000041	6313	4	0.156641			
100000041	6313	5	0.030854			
100000041	6313	6	0.012565			
100000041	6313	7	0.077311			
100000041	6313	8	0.027368			
100000041	6313	9	0.030222			
100000041	6313	10	0.01234			
100000046	5511	1	28.483497	BUSH RIVER RD	E	BUSH RIVER RD
100000046	5511	2	29.462125			
100000046	5511	3	28.802486			
100000046	5511	4	27.32895			
100000046	5511	5	32.780682			
100000046	5511	6	28.635825			
100000046	5511	7	27.621336			
100000046	5511	8	28.888571			
100000046	5511	9	29.366469			
100000046	5511	10	28.322698			
100000046	6323	1	323.59871	BROAD RIVER RD	NW	BUSH RIVER RD
100000046	6323	2	355.568206			
100000046	6323	3	357.163123			
100000046	6323	4	325.257204			
100000046	6323	5	289.166862			
100000046	6323	6	354.855403			
100000046	6323	7	210.476414			
100000046	6323	8	261.836963			
100000046	6323	9	339.896213			
100000046	6323	10	248.241037			
100000046	6324	1	64.997316	ELM ABODE TER	SW	BUSH RIVER RD
100000046	6324	2	55.448649			
100000046	6324	3	109.492618			
100000046	6324	4	124.298079			
100000046	6324	5	102.676013			
100000046	6324	6	73.958185			
100000046	6324	7	74.433754			
100000046	6324	8	55.379891			
100000046	6324	9	63.788091			
100000046	6324	10	78.414731			
100000046	6518	1	24.573181	BROAD RIVER RD	SE	BUSH RIVER RD
100000046	6518	2	22.948954			
100000046	6518	3	29.406212			
100000046	6518	4	24.987198			
100000046	6518	5	28.16662			
100000046	6518	6	29.704228			
100000046	6518	7	25.371543			
100000046	6518	8	30.015036			
100000046	6518	9	22.40859			
100000046	6518	10	30.805506			
100000049	6318	1	81.816074	LOST CREEK DR	S	LOST CREEK DR
100000049	6318	2	75.218834			
100000049	6318	3	78.60835			

Node	Superlink	Run	Average Control Delay	Approach Street Name	Direction	Intersection
100000049	6318	4	77.407965			
100000049	6318	5	77.599102			
100000049	6318	6	81.361632			
100000049	6318	7	83.056896			
100000049	6318	8	75.237274			
100000049	6318	9	77.584383			
100000049	6318	10	83.312939			
100000049	6319	1	19.571005	PINEY WOODS RD	N	LOST CREEK DR
100000049	6319	2	17.776644			
100000049	6319	3	19.606844			
100000049	6319	4	19.180558			
100000049	6319	5	17.258076			
100000049	6319	6	19.8807			
100000049	6319	7	22.042355			
100000049	6319	8	17.415468			
100000049	6319	9	17.544621			
100000049	6319	10	20.322028			
100000049	6320	1	13.167576	BROAD RIVER RD	SE	LOST CREEK DR
100000049	6320	2	12.231441			
100000049	6320	3	12.550337			
100000049	6320	4	12.794144			
100000049	6320	5	13.558893			
100000049	6320	6	14.814254			
100000049	6320	7	11.662911			
100000049	6320	8	9.643033			
100000049	6320	9	12.434224			
100000049	6320	10	12.459693			
100000049	6322	1	7.372376	BROAD RIVER RD	NW	LOST CREEK DR
100000049	6322	2	7.470843			
100000049	6322	3	7.932162			
100000049	6322	4	7.466232			
100000049	6322	5	7.684949			
100000049	6322	6	7.78425			
100000049	6322	7	8.580916			
100000049	6322	8	8.507713			
100000049	6322	9	8.936715			
100000049	6322	10	7.603116			
100000068	6321	1	11.196756	PINEY GROVE RD	E	BROAD RIVER RD & PINEY GROVE RD
100000068	6321	2	12.460156			
100000068	6321	3	12.635162			
100000068	6321	4	13.725089			
100000068	6321	5	14.067352			
100000068	6321	6	13.853073			
100000068	6321	7	15.620199			
100000068	6321	8	16.520099			
100000068	6321	9	16.702127			
100000068	6321	10	13.347532			
100000068	6322	1	2.377723	BROAD RIVER RD	SE	BROAD RIVER RD & PINEY GROVE RD
100000068	6322	2	3.525217			
100000068	6322	3	3.016124			
100000068	6322	4	3.034435			
100000068	6322	5	3.279833			
100000068	6322	6	3.071729			
100000068	6322	7	2.318788			
100000068	6322	8	3.342806			
100000068	6322	9	2.743835			
100000068	6322	10	3.078676			
100000068	6357	1	3.336046	BROAD RIVER RD	NW	BROAD RIVER RD & PINEY GROVE RD
100000068	6357	2	3.426508			
100000068	6357	3	4.23118			
100000068	6357	4	5.360071			
100000068	6357	5	4.658594			
100000068	6357	6	3.250486			
100000068	6357	7	3.073925			
100000068	6357	8	3.485675			
100000068	6357	9	4.107685			
100000068	6357	10	4.540346			
100000085	6325	1	0.025399	BROAD RIVER RD	E	BROAD RIVER RD
100000085	6325	2	0.02328			
100000085	6325	3	0.061394			
100000085	6325	4	0.034164			
100000085	6325	5	0.050253			
100000085	6325	6	0.019528			
100000085	6325	7	0.043483			
100000085	6325	8	0.042123			
100000085	6325	9	0.043581			
100000085	6325	10	0.040869			
100000085	6329	1	3.100101	RT	E	BROAD RIVER RD
100000085	6329	2	3.378241			
100000085	6329	3	2.948278			
100000085	6329	4	3.938367			
100000085	6329	5	4.116965			
100000085	6329	6	3.342006			
100000085	6329	7	4.378055			
100000085	6329	8	4.310957			
100000085	6329	9	3.161568			
100000085	6329	10	3.783175			
100000085	6330	1	1.364367	BROAD RIVER RD	W	BROAD RIVER RD
100000085	6330	2	2.415547			
100000085	6330	3	5.8951			
100000085	6330	4	1.987065			
100000085	6330	5	2.308001			
100000085	6330	6	2.436262			
100000085	6330	7	3.318003			
100000085	6330	8	2.932467			
100000085	6330	9	2.468417			
100000085	6330	10	2.526873			
100000085	6331	1	4.583874	RIVERHILL CIR	W	BROAD RIVER RD
100000085	6331	2	4.766055			
100000085	6331	3	4.280951			
100000085	6331	4	6.615487			
100000085	6331	5	6.641915			
100000085	6331	6	4.863619			
100000085	6331	7	6.826051			
100000085	6331	8	6.709153			
100000085	6331	9	4.927978			
100000085	6331	10	8.139385			
100000093	4299	1	56.441332	RAMP	SW	SUNSET BLVD & RAMP
100000093	4299	2	54.218644			
100000093	4299	3	51.515087			

Node	Superlink	Run	Average Control Delay	Approach Street Name	Direction	Intersection
100000093	4299	4	55.490651			
100000093	4299	5	54.810857			
100000093	4299	6	51.738591			
100000093	4299	7	55.451263			
100000093	4299	8	53.584123			
100000093	4299	9	56.809682			
100000093	4299	10	54.220291			
100000093	4949	1	18.054488	SUNSET BLVD	E	SUNSET BLVD & RAMP
100000093	4949	2	24.180305			
100000093	4949	3	18.828991			
100000093	4949	4	15.476736			
100000093	4949	5	17.433018			
100000093	4949	6	20.368392			
100000093	4949	7	18.644981			
100000093	4949	8	20.379803			
100000093	4949	9	17.524005			
100000093	4949	10	17.003016			
100000093	4950	1	0.001263	SUNSET BLVD	W	SUNSET BLVD & RAMP
100000093	4950	2	0.002107			
100000093	4950	3	0.002635			
100000093	4950	4	0.021326			
100000093	4950	5	0.023804			
100000093	4950	6	0.001625			
100000093	4950	7	0.001952			
100000093	4950	8	0.001107			
100000093	4950	9	0.027328			
100000093	4950	10	0.002162			
100000120	5031	1	12.024357	SUNSET BLVD	W	CORLEY MILL RD
100000120	5031	2	11.585623			
100000120	5031	3	12.174694			
100000120	5031	4	10.821452			
100000120	5031	5	12.025573			
100000120	5031	6	11.462155			
100000120	5031	7	12.355689			
100000120	5031	8	11.096582			
100000120	5031	9	11.191167			
100000120	5031	10	11.736798			
100000120	5352	1	13.946269	CORLEY MILL RD	S	CORLEY MILL RD
100000120	5352	2	14.843244			
100000120	5352	3	15.823309			
100000120	5352	4	13.754419			
100000120	5352	5	13.894036			
100000120	5352	6	13.81214			
100000120	5352	7	14.668374			
100000120	5352	8	13.991808			
100000120	5352	9	13.111026			
100000120	5352	10	15.880472			
100000120	5353	1	30.873292	GINNY LN	N	CORLEY MILL RD
100000120	5353	2	35.513452			
100000120	5353	3	44.531428			
100000120	5353	4	31.861186			
100000120	5353	5	32.304233			
100000120	5353	6	31.321784			
100000120	5353	7	36.069591			
100000120	5353	8	36.042862			
100000120	5353	9	31.175995			
100000120	5353	10	36.34567			
100000120	5355	1	127.839373	SUNSET BLVD	E	CORLEY MILL RD
100000120	5355	2	154.3594			
100000120	5355	3	124.667978			
100000120	5355	4	123.225275			
100000120	5355	5	149.648381			
100000120	5355	6	113.237222			
100000120	5355	7	164.078013			
100000120	5355	8	78.037695			
100000120	5355	9	101.518229			
100000120	5355	10	119.893817			
100000134	2048	1	21.127539	RAMP	SW	SUNSET BLVD & RAMP
100000134	2048	2	23.555237			
100000134	2048	3	23.99869			
100000134	2048	4	25.666383			
100000134	2048	5	25.632905			
100000134	2048	6	24.604618			
100000134	2048	7	24.668767			
100000134	2048	8	23.178347			
100000134	2048	9	24.302121			
100000134	2048	10	23.461617			
100000134	5027	1	5.796631	SUNSET BLVD	NW	SUNSET BLVD & RAMP
100000134	5027	2	7.160019			
100000134	5027	3	6.90333			
100000134	5027	4	6.970519			
100000134	5027	5	5.862344			
100000134	5027	6	5.889349			
100000134	5027	7	7.327447			
100000134	5027	8	5.972894			
100000134	5027	9	4.999216			
100000134	5027	10	6.434503			
100000134	5030	1	7.731397	SUNSET BLVD	SE	SUNSET BLVD & RAMP
100000134	5030	2	10.734158			
100000134	5030	3	10.888807			
100000134	5030	4	12.186597			
100000134	5030	5	10.539033			
100000134	5030	6	7.756904			
100000134	5030	7	10.135417			
100000134	5030	8	8.521508			
100000134	5030	9	9.672227			
100000134	5030	10	10.474211			
100000135	2039	1	13.161695	I-20 EB OFF-RAMP	NE	SUNSET BLVD & I-20 EB OFF-RAMP
100000135	2039	2	12.386856			
100000135	2039	3	12.805583			
100000135	2039	4	13.256092			
100000135	2039	5	13.173389			
100000135	2039	6	11.646911			
100000135	2039	7	12.274463			
100000135	2039	8	12.701703			
100000135	2039	9	11.881719			
100000135	2039	10	13.261945			
100000135	5022	1	11.480069	SUNSET BLVD	SE	SUNSET BLVD & I-20 EB OFF-RAMP
100000135	5022	2	12.544826			
100000135	5022	3	10.868017			

Node	Superlink	Run	Average Control Delay	Approach Street Name	Direction	Intersection
100000135	5022	4	13.376145			
100000135	5022	5	12.432258			
100000135	5022	6	10.854829			
100000135	5022	7	11.590184			
100000135	5022	8	11.266121			
100000135	5022	9	14.060085			
100000135	5022	10	12.292871			
100000135	5023	1	5.44239	SUNSET BLVD	NW	SUNSET BLVD & I-20 EB OFF-RAMP
100000135	5023	2	5.336052			
100000135	5023	3	5.343607			
100000135	5023	4	5.284629			
100000135	5023	5	5.717804			
100000135	5023	6	6.167235			
100000135	5023	7	5.456187			
100000135	5023	8	5.156486			
100000135	5023	9	6.027699			
100000135	5023	10	6.267189			
100000136	5021	1	32.4582	SUNSET BLVD	SE	SUNSET BLVD
100000136	5021	2	34.442055			
100000136	5021	3	35.270837			
100000136	5021	4	35.417196			
100000136	5021	5	32.952692			
100000136	5021	6	31.714127			
100000136	5021	7	31.879632			
100000136	5021	8	34.092556			
100000136	5021	9	34.625301			
100000136	5021	10	34.570985			
100000136	5362	1	397.173479	CROMER RD	NE	SUNSET BLVD
100000136	5362	2	388.52443			
100000136	5362	3	381.95682			
100000136	5362	4	383.2382			
100000136	5362	5	444.452954			
100000136	5362	6	420.46685			
100000136	5362	7	348.586026			
100000136	5362	8	425.729691			
100000136	5362	9	385.557558			
100000136	5362	10	429.826595			
100000136	5364	1	84.723766	SUNSET BLVD	NW	SUNSET BLVD
100000136	5364	2	84.282383			
100000136	5364	3	56.948638			
100000136	5364	4	86.272597			
100000136	5364	5	93.918406			
100000136	5364	6	79.62681			
100000136	5364	7	81.030535			
100000136	5364	8	65.630221			
100000136	5364	9	85.082174			
100000136	5364	10	71.163751			
100000136	6459	1	11.554698	DAVEGA DR	SW	SUNSET BLVD
100000136	6459	2	19.906081			
100000136	6459	3	19.908368			
100000136	6459	4	21.527401			
100000136	6459	5	20.227868			
100000136	6459	6	19.38058			
100000136	6459	7	17.332347			
100000136	6459	8	12.338649			
100000136	6459	9	12.274323			
100000136	6459	10	16.169118			
100000138	2052	1	0	RAMP	NW	RAMP
100000138	2052	2	0			
100000138	2052	3	0			
100000138	2052	4	0			
100000138	2052	5	0			
100000138	2052	6	0			
100000138	2052	7	0			
100000138	2052	8	0			
100000138	2052	9	0			
100000138	2052	10	0			
100000138	5030	1	0	SUNSET BLVD	NW	RAMP
100000138	5030	2	0			
100000138	5030	3	0			
100000138	5030	4	0			
100000138	5030	5	0			
100000138	5030	6	0			
100000138	5030	7	0			
100000138	5030	8	0			
100000138	5030	9	0			
100000138	5030	10	0			
100000138	6553	1	20.483038	SUNSET BLVD	SE	RAMP
100000138	6553	2	31.241477			
100000138	6553	3	31.965081			
100000138	6553	4	41.304043			
100000138	6553	5	30.326224			
100000138	6553	6	20.480435			
100000138	6553	7	28.262287			
100000138	6553	8	24.579296			
100000138	6553	9	27.614396			
100000138	6553	10	30.398463			
100000139	2065	1	27.809858	RAMP	S	RAMP & BUSH RIVER RD
100000139	2065	2	36.469902			
100000139	2065	3	32.558733			
100000139	2065	4	29.307812			
100000139	2065	5	32.552486			
100000139	2065	6	29.577636			
100000139	2065	7	31.446313			
100000139	2065	8	23.226053			
100000139	2065	9	35.156792			
100000139	2065	10	30.659823			
100000139	5033	1	12.634436	BUSH RIVER RD	NW	RAMP & BUSH RIVER RD
100000139	5033	2	14.580521			
100000139	5033	3	11.767737			
100000139	5033	4	12.478895			
100000139	5033	5	11.115315			
100000139	5033	6	9.898142			
100000139	5033	7	11.857951			
100000139	5033	8	13.624693			
100000139	5033	9	10.64889			
100000139	5033	10	12.325521			
100000139	5034	1	7.956919	BUSH RIVER RD	SE	RAMP & BUSH RIVER RD
100000139	5034	2	8.104185			
100000139	5034	3	8.01845			

Node	Superlink	Run	Average Control Delay	Approach Street Name	Direction	Intersection
100000139	5034	4	8.669877			
100000139	5034	5	7.466122			
100000139	5034	6	7.027314			
100000139	5034	7	7.866412			
100000139	5034	8	8.58575			
100000139	5034	9	7.731253			
100000139	5034	10	8.258221			
100000140	5376	1	9.655279	SUNSET BLVD	W	SUMMER PLACE DR
100000140	5376	2	14.52217			
100000140	5376	3	10.482727			
100000140	5376	4	13.374726			
100000140	5376	5	10.518342			
100000140	5376	6	11.60168			
100000140	5376	7	11.435203			
100000140	5376	8	9.378193			
100000140	5376	9	10.233965			
100000140	5376	10	13.320102			
100000140	5378	1	49.000717	SUMMER PLACE DR	N	SUMMER PLACE DR
100000140	5378	2	44.875923			
100000140	5378	3	43.716402			
100000140	5378	4	45.809335			
100000140	5378	5	46.27098			
100000140	5378	6	44.659529			
100000140	5378	7	44.265787			
100000140	5378	8	43.771304			
100000140	5378	9	46.283684			
100000140	5378	10	44.43316			
100000140	6489	1		FAIRLANE DR	S	SUMMER PLACE DR
100000140	6489	2				
100000140	6489	3				
100000140	6489	4				
100000140	6489	5				
100000140	6489	6				
100000140	6489	7				
100000140	6489	8				
100000140	6489	9				
100000140	6489	10				
100000140	6764	1	9.743394	SUNSET BLVD	E	SUMMER PLACE DR
100000140	6764	2	10.941672			
100000140	6764	3	9.381138			
100000140	6764	4	9.963618			
100000140	6764	5	9.306964			
100000140	6764	6	7.840586			
100000140	6764	7	10.387764			
100000140	6764	8	8.872006			
100000140	6764	9	9.475265			
100000140	6764	10	9.944259			
100000142	2053	1	12.701307	RAMP	NE	BUSH RIVER RD & RAMP
100000142	2053	2	9.350116			
100000142	2053	3	11.84023			
100000142	2053	4	13.210314			
100000142	2053	5	10.819407			
100000142	2053	6	11.291947			
100000142	2053	7	10.192148			
100000142	2053	8	11.913574			
100000142	2053	9	12.041096			
100000142	2053	10	11.087424			
100000142	5036	1	2.875747	BUSH RIVER RD	SE	BUSH RIVER RD & RAMP
100000142	5036	2	3.469294			
100000142	5036	3	3.877994			
100000142	5036	4	2.405042			
100000142	5036	5	4.199982			
100000142	5036	6	4.791818			
100000142	5036	7	4.388194			
100000142	5036	8	3.281311			
100000142	5036	9	4.239463			
100000142	5036	10	3.078219			
100000142	5037	1	6.801565	BUSH RIVER RD	NW	BUSH RIVER RD & RAMP
100000142	5037	2	8.271407			
100000142	5037	3	8.870978			
100000142	5037	4	8.055926			
100000142	5037	5	7.734082			
100000142	5037	6	8.962564			
100000142	5037	7	8.202273			
100000142	5037	8	9.072853			
100000142	5037	9	8.232129			
100000142	5037	10	8.111247			
100000143	5372	1	0	SUNSET BLVD	E	SUNSET BLVD & HEBRON DR
100000143	5372	2	0			
100000143	5372	3	0			
100000143	5372	4	0			
100000143	5372	5	0			
100000143	5372	6	0			
100000143	5372	7	0			
100000143	5372	8	0			
100000143	5372	9	0			
100000143	5372	10	0			
100000143	6763	1		HEBRON DR	N	SUNSET BLVD & HEBRON DR
100000143	6763	2				
100000143	6763	3				
100000143	6763	4				
100000143	6763	5				
100000143	6763	6				
100000143	6763	7				
100000143	6763	8				
100000143	6763	9				
100000143	6763	10				
100000143	6764	1	0	SUNSET BLVD	W	SUNSET BLVD & HEBRON DR
100000143	6764	2	0			
100000143	6764	3	0			
100000143	6764	4	0			
100000143	6764	5	0			
100000143	6764	6	0			
100000143	6764	7	0			
100000143	6764	8	0			
100000143	6764	9	0			
100000143	6764	10	0			
100000144	5376	1	4.50987	SUNSET BLVD	E	SUNSET BLVD
100000144	5376	2	15.926067			
100000144	5376	3	9.956101			

Node	Superlink	Run	Average Control Delay	Approach Street Name	Direction	Intersection
100000144	5376	4	8.07362			
100000144	5376	5	8.468662			
100000144	5376	6	10.430739			
100000144	5376	7	8.438887			
100000144	5376	8	15.009944			
100000144	5376	9	6.323797			
100000144	5376	10	4.348199			
100000144	6760	1	57.633694	W. HOSPTIAL DR	S	SUNSET BLVD
100000144	6760	2	69.149509			
100000144	6760	3	60.146841			
100000144	6760	4	54.051125			
100000144	6760	5	60.742453			
100000144	6760	6	59.678929			
100000144	6760	7	61.800613			
100000144	6760	8	57.01166			
100000144	6760	9	58.311481			
100000144	6760	10	55.588425			
100000144	6761	1		SUNSET CT	N	SUNSET BLVD
100000144	6761	2				
100000144	6761	3				
100000144	6761	4				
100000144	6761	5				
100000144	6761	6				
100000144	6761	7				
100000144	6761	8				
100000144	6761	9				
100000144	6761	10				
100000144	6762	1	19.698346	SUNSET BLVD	W	SUNSET BLVD
100000144	6762	2	25.029666			
100000144	6762	3	22.460347			
100000144	6762	4	23.476853			
100000144	6762	5	24.600034			
100000144	6762	6	21.434156			
100000144	6762	7	26.541021			
100000144	6762	8	24.128714			
100000144	6762	9	20.57762			
100000144	6762	10	22.543572			
100000150	3361	1	17.229772	I-26 EXIT 101 EB OFF RAMP	SW	I-26 EXIT 101 EB OFF RAMP & BROAD RIVER RD
100000150	3361	2	20.381202			
100000150	3361	3	21.764945			
100000150	3361	4	20.796916			
100000150	3361	5	20.302917			
100000150	3361	6	17.102931			
100000150	3361	7	20.26629			
100000150	3361	8	16.778226			
100000150	3361	9	17.481079			
100000150	3361	10	20.80137			
100000150	5071	1	0	BROAD RIVER RD	E	I-26 EXIT 101 EB OFF RAMP & BROAD RIVER RD
100000150	5071	2	0			
100000150	5071	3	0			
100000150	5071	4	0			
100000150	5071	5	0			
100000150	5071	6	0			
100000150	5071	7	0			
100000150	5071	8	0			
100000150	5071	9	0			
100000150	5071	10	0			
100000150	5073	1	0.049507	BROAD RIVER RD	W	I-26 EXIT 101 EB OFF RAMP & BROAD RIVER RD
100000150	5073	2	0.048294			
100000150	5073	3	0.035433			
100000150	5073	4	0.05034			
100000150	5073	5	0.03702			
100000150	5073	6	0.048434			
100000150	5073	7	0.039902			
100000150	5073	8	0.040485			
100000150	5073	9	0.056208			
100000150	5073	10	0.033057			
100000151	5072	1	0.382998	BROAD RIVER RD	E	BROAD RIVER RD & ON-RAMP from WB
100000151	5072	2	0.398408			
100000151	5072	3	0.654338			
100000151	5072	4	0.553399			
100000151	5072	5	0.747793			
100000151	5072	6	0.539795			
100000151	5072	7	0.492098			
100000151	5072	8	0.571683			
100000151	5072	9	0.681948			
100000151	5072	10	0.541663			
100000151	5075	1	3.282413	BROAD RIVER RD	W	BROAD RIVER RD & ON-RAMP from WB
100000151	5075	2	2.669448			
100000151	5075	3	4.006632			
100000151	5075	4	3.729017			
100000151	5075	5	3.983574			
100000151	5075	6	3.934544			
100000151	5075	7	2.976244			
100000151	5075	8	3.717601			
100000151	5075	9	3.706184			
100000151	5075	10	2.767417			
100000155	6084	1	4.280481	BROAD RIVER RD	N	BEATTY RD & BROAD RIVER RD
100000155	6084	2	4.650009			
100000155	6084	3	4.547393			
100000155	6084	4	3.21341			
100000155	6084	5	5.522375			
100000155	6084	6	7.19824			
100000155	6084	7	5.512656			
100000155	6084	8	4.487868			
100000155	6084	9	4.768575			
100000155	6084	10	4.378721			
100000155	6355	1	30.983849	BEATTY RD	E	BEATTY RD & BROAD RIVER RD
100000155	6355	2	28.684348			
100000155	6355	3	31.456908			
100000155	6355	4	27.875288			
100000155	6355	5	30.003249			
100000155	6355	6	28.08561			
100000155	6355	7	30.468532			
100000155	6355	8	25.352967			
100000155	6355	9	30.720027			
100000155	6355	10	24.206239			
100000155	6357	1	12.691197	BROAD RIVER RD	S	BEATTY RD & BROAD RIVER RD
100000155	6357	2	13.888467			
100000155	6357	3	12.361163			

Node	Superlink	Run	Average Control Delay	Approach Street Name	Direction	Intersection
100000155	6357	4	14.538786			
100000155	6357	5	15.179852			
100000155	6357	6	13.362167			
100000155	6357	7	13.235451			
100000155	6357	8	12.817712			
100000155	6357	9	12.613017			
100000155	6357	10	12.65192			
100000163	4947	1	5.307964	SUNSET BLVD	E	MCSWAIN DR
100000163	4947	2	5.206281			
100000163	4947	3	4.695235			
100000163	4947	4	6.07018			
100000163	4947	5	6.906012			
100000163	4947	6	6.210628			
100000163	4947	7	5.227942			
100000163	4947	8	5.313421			
100000163	4947	9	6.110714			
100000163	4947	10	6.327235			
100000163	5388	1	5.375811	SUNSET BLVD	W	MCSWAIN DR
100000163	5388	2	4.960754			
100000163	5388	3	4.178947			
100000163	5388	4	4.989513			
100000163	5388	5	6.002627			
100000163	5388	6	5.430109			
100000163	5388	7	4.440595			
100000163	5388	8	5.305245			
100000163	5388	9	5.346402			
100000163	5388	10	5.040221			
100000163	5389	1	22.529643	MCSWAIN DR	S	MCSWAIN DR
100000163	5389	2	17.151081			
100000163	5389	3	15.552161			
100000163	5389	4	24.875283			
100000163	5389	5	22.187095			
100000163	5389	6	20.989146			
100000163	5389	7	20.869146			
100000163	5389	8	23.904416			
100000163	5389	9	19.966586			
100000163	5389	10	20.028827			
100000163	5418	1	84.381958	CHRIS DR	N	MCSWAIN DR
100000163	5418	2	79.80489			
100000163	5418	3	82.213411			
100000163	5418	4	66.569247			
100000163	5418	5	65.684231			
100000163	5418	6	80.904353			
100000163	5418	7	85.100227			
100000163	5418	8	76.143618			
100000163	5418	9	83.343609			
100000163	5418	10	88.112859			
100000164	3354	1	0	I-26 EXIT 102 EB OFF RAMP	W	LAKE MURRAY BLVD & I-26 EXIT 102 EB OFF RAMP
100000164	3354	2	0			
100000164	3354	3	0			
100000164	3354	4	0			
100000164	3354	5	0			
100000164	3354	6	0			
100000164	3354	7	0			
100000164	3354	8	0			
100000164	3354	9	0			
100000164	3354	10	0			
100000164	5084	1	0	LAKE MURRAY BLVD	E	LAKE MURRAY BLVD & I-26 EXIT 102 EB OFF RAMP
100000164	5084	2	0			
100000164	5084	3	0			
100000164	5084	4	0			
100000164	5084	5	0			
100000164	5084	6	0			
100000164	5084	7	0			
100000164	5084	8	0			
100000164	5084	9	0			
100000164	5084	10	0			
100000164	5085	1	0.000341	LAKE MURRAY BLVD	W	LAKE MURRAY BLVD & I-26 EXIT 102 EB OFF RAMP
100000164	5085	2	0			
100000164	5085	3	0.001636			
100000164	5085	4	0.001814			
100000164	5085	5	0.000316			
100000164	5085	6	0.000527			
100000164	5085	7	0			
100000164	5085	8	0.000318			
100000164	5085	9	0			
100000164	5085	10	0.000207			
100000165	3330	1	44.050765	EXIT 103 WB OFF RAMP	SE	HARBISON BLVD
100000165	3330	2	46.214571			
100000165	3330	3	40.812446			
100000165	3330	4	43.598696			
100000165	3330	5	45.865274			
100000165	3330	6	40.353448			
100000165	3330	7	47.020457			
100000165	3330	8	50.163516			
100000165	3330	9	43.254524			
100000165	3330	10	39.232727			
100000165	5096	1	6.372936	HARBISON BLVD	NE	HARBISON BLVD
100000165	5096	2	8.049817			
100000165	5096	3	6.602267			
100000165	5096	4	10.284159			
100000165	5096	5	7.749928			
100000165	5096	6	7.040858			
100000165	5096	7	9.127176			
100000165	5096	8	7.382112			
100000165	5096	9	6.848994			
100000165	5096	10	7.326911			
100000165	5102	1	3.261967	HARBISON BLVD	SW	HARBISON BLVD
100000165	5102	2	5.591679			
100000165	5102	3	4.706111			
100000165	5102	4	4.262774			
100000165	5102	5	4.522495			
100000165	5102	6	4.218869			
100000165	5102	7	4.119837			
100000165	5102	8	4.401897			
100000165	5102	9	5.78307			
100000165	5102	10	4.087309			
100000165	5103	1	50.282527	WOODCROSS DR	NW	HARBISON BLVD
100000165	5103	2	46.349364			
100000165	5103	3	48.083722			

Node	Superlink	Run	Average Control Delay	Approach Street Name	Direction	Intersection
100000165	5103	4	47.868432			
100000165	5103	5	47.613681			
100000165	5103	6	51.519366			
100000165	5103	7	50.029875			
100000165	5103	8	52.674273			
100000165	5103	9	49.859308			
100000165	5103	10	50.567995			
100000166	3343	1	0	I-26 EXIT 102 EBL OFF RAMP	E	LAKE MURRAY BLVD & I-26 EXIT 102 EBL OFF RAMP
100000166	3343	2	0			
100000166	3343	3	0			
100000166	3343	4	0			
100000166	3343	5	0			
100000166	3343	6	0			
100000166	3343	7	0			
100000166	3343	8	0			
100000166	3343	9	0			
100000166	3343	10	0			
100000166	5087	1	0	LAKE MURRAY BLVD	E	LAKE MURRAY BLVD & I-26 EXIT 102 EBL OFF RAMP
100000166	5087	2	0			
100000166	5087	3	0			
100000166	5087	4	0			
100000166	5087	5	0			
100000166	5087	6	0			
100000166	5087	7	0			
100000166	5087	8	0			
100000166	5087	9	0			
100000166	5087	10	0			
100000166	5088	1	0	LAKE MURRAY BLVD	W	LAKE MURRAY BLVD & I-26 EXIT 102 EBL OFF RAMP
100000166	5088	2	0			
100000166	5088	3	0			
100000166	5088	4	0			
100000166	5088	5	0			
100000166	5088	6	0			
100000166	5088	7	0			
100000166	5088	8	0			
100000166	5088	9	0			
100000166	5088	10	0			
100000167	3339	1	0	I-26 EXIT 102 WBL OFF RAMP	W	I-26 EXIT 102 WBL OFF RAMP & LAKE MURRAY BLVD
100000167	3339	2	0			
100000167	3339	3	0			
100000167	3339	4	0			
100000167	3339	5	0			
100000167	3339	6	0			
100000167	3339	7	0			
100000167	3339	8	0			
100000167	3339	9	0			
100000167	3339	10	0			
100000167	5088	1	0	LAKE MURRAY BLVD	E	I-26 EXIT 102 WBL OFF RAMP & LAKE MURRAY BLVD
100000167	5088	2	0			
100000167	5088	3	0			
100000167	5088	4	0			
100000167	5088	5	0			
100000167	5088	6	0			
100000167	5088	7	0			
100000167	5088	8	0			
100000167	5088	9	0			
100000167	5088	10	0			
100000167	5090	1	0	LAKE MURRAY BLVD	W	I-26 EXIT 102 WBL OFF RAMP & LAKE MURRAY BLVD
100000167	5090	2	0			
100000167	5090	3	0			
100000167	5090	4	0			
100000167	5090	5	0			
100000167	5090	6	0			
100000167	5090	7	0			
100000167	5090	8	0			
100000167	5090	9	0			
100000167	5090	10	0			
100000168	5366	1	21.62448	LEAPHART RD	N	SUNSET BLVD & LEAPHART RD
100000168	5366	2	24.447123			
100000168	5366	3	20.810055			
100000168	5366	4	23.185042			
100000168	5366	5	26.990395			
100000168	5366	6	23.661295			
100000168	5366	7	22.186617			
100000168	5366	8	20.987922			
100000168	5366	9	23.671033			
100000168	5366	10	21.660504			
100000168	5368	1	5.259214	SUNSET BLVD	E	SUNSET BLVD & LEAPHART RD
100000168	5368	2	6.233057			
100000168	5368	3	5.136743			
100000168	5368	4	6.327365			
100000168	5368	5	6.261643			
100000168	5368	6	5.898192			
100000168	5368	7	5.859671			
100000168	5368	8	5.386167			
100000168	5368	9	6.251778			
100000168	5368	10	5.060848			
100000168	5372	1	28.523048	SUNSET BLVD	W	SUNSET BLVD & LEAPHART RD
100000168	5372	2	43.825411			
100000168	5372	3	10.6656			
100000168	5372	4	49.782602			
100000168	5372	5	93.972074			
100000168	5372	6	65.283348			
100000168	5372	7	40.774864			
100000168	5372	8	11.868232			
100000168	5372	9	59.604725			
100000168	5372	10	14.110196			
100000171	3342	1	0	I-26 EXIT 102 WB OFF RAMP	E	LAKE MURRAY BLVD & I-26 EXIT 102 WB OFF RAMP
100000171	3342	2	0			
100000171	3342	3	0			
100000171	3342	4	0			
100000171	3342	5	0			
100000171	3342	6	0			
100000171	3342	7	0			
100000171	3342	8	0			
100000171	3342	9	0			
100000171	3342	10	0			
100000171	5092	1	0.008187	LAKE MURRAY BLVD	E	LAKE MURRAY BLVD & I-26 EXIT 102 WB OFF RAMP
100000171	5092	2	0.012457			
100000171	5092	3	0.00446			

Node	Superlink	Run	Average Control Delay	Approach Street Name	Direction	Intersection
100000171	5092	4	0.009673			
100000171	5092	5	0.013956			
100000171	5092	6	0.007959			
100000171	5092	7	0.007484			
100000171	5092	8	0.004669			
100000171	5092	9	0.005749			
100000171	5092	10	0.004569			
100000171	5093	1	0	LAKE MURRAY BLVD	W	LAKE MURRAY BLVD & I-26 EXIT 102 WB OFF RAMP
100000171	5093	2	0			
100000171	5093	3	0			
100000171	5093	4	0			
100000171	5093	5	0			
100000171	5093	6	0			
100000171	5093	7	0			
100000171	5093	8	0			
100000171	5093	9	0			
100000171	5093	10	0			
100000173	3212	1	51.970871		103 SE	HARBISON BLVD
100000173	3212	2	53.29775			
100000173	3212	3	49.663197			
100000173	3212	4	60.975814			
100000173	3212	5	43.20326			
100000173	3212	6	46.815512			
100000173	3212	7	50.986258			
100000173	3212	8	41.034826			
100000173	3212	9	50.256761			
100000173	3212	10	46.286287			
100000173	3213	1	8.422716		103 S	HARBISON BLVD
100000173	3213	2	8.674786			
100000173	3213	3	8.086402			
100000173	3213	4	8.601336			
100000173	3213	5	9.605033			
100000173	3213	6	8.42267			
100000173	3213	7	8.198767			
100000173	3213	8	7.936039			
100000173	3213	9	8.107957			
100000173	3213	10	9.849601			
100000173	5097	1	3.309956	HARBISON BLVD	NE	HARBISON BLVD
100000173	5097	2	3.831376			
100000173	5097	3	3.462685			
100000173	5097	4	3.205661			
100000173	5097	5	5.693671			
100000173	5097	6	4.30626			
100000173	5097	7	3.799889			
100000173	5097	8	3.605823			
100000173	5097	9	4.381119			
100000173	5097	10	3.198088			
100000173	5099	1	5.875035	HARBISON BLVD	SW	HARBISON BLVD
100000173	5099	2	5.09997			
100000173	5099	3	6.242937			
100000173	5099	4	5.579739			
100000173	5099	5	6.524148			
100000173	5099	6	5.979043			
100000173	5099	7	7.266395			
100000173	5099	8	5.816292			
100000173	5099	9	7.30071			
100000173	5099	10	8.167141			
100000175	3234	1	42.470741	RAMP	SE	PINEY GROVE RD & RAMP
100000175	3234	2	45.498163			
100000175	3234	3	38.604459			
100000175	3234	4	41.744637			
100000175	3234	5	44.400688			
100000175	3234	6	42.777219			
100000175	3234	7	45.570498			
100000175	3234	8	40.810277			
100000175	3234	9	44.121836			
100000175	3234	10	41.573185			
100000175	5112	1	16.879345	PINEY GROVE RD	W	PINEY GROVE RD & RAMP
100000175	5112	2	12.719207			
100000175	5112	3	14.640693			
100000175	5112	4	11.017131			
100000175	5112	5	15.381348			
100000175	5112	6	22.37102			
100000175	5112	7	32.967281			
100000175	5112	8	39.17406			
100000175	5112	9	12.663569			
100000175	5112	10	31.181178			
100000175	6544	1	8.021069	PINEY GROVE RD	E	PINEY GROVE RD & RAMP
100000175	6544	2	8.334662			
100000175	6544	3	9.534238			
100000175	6544	4	7.618192			
100000175	6544	5	7.448031			
100000175	6544	6	7.150149			
100000175	6544	7	7.492705			
100000175	6544	8	7.084104			
100000175	6544	9	7.835513			
100000175	6544	10	8.337877			
100000177	5112	1	15.426903	PINEY GROVE RD	E	PINEY GROVE RD
100000177	5112	2	20.346237			
100000177	5112	3	18.287904			
100000177	5112	4	15.626122			
100000177	5112	5	16.629747			
100000177	5112	6	15.848594			
100000177	5112	7	19.111082			
100000177	5112	8	19.847334			
100000177	5112	9	19.250688			
100000177	5112	10	25.925372			
100000177	5113	1	51.20712	PINEY GROVE RD	W	PINEY GROVE RD
100000177	5113	2	46.839548			
100000177	5113	3	53.213228			
100000177	5113	4	31.551637			
100000177	5113	5	45.296796			
100000177	5113	6	39.025729			
100000177	5113	7	55.92459			
100000177	5113	8	80.50452			
100000177	5113	9	44.790129			
100000177	5113	10	66.53959			
100000177	6513	1	7.627413	EXIT 104 WB OFF RAMP	N	PINEY GROVE RD
100000177	6513	2	8.341159			
100000177	6513	3	8.005963			

Node	Superlink	Run	Average Control Delay	Approach Street Name	Direction	Intersection
100000177	6513	4	8.896572			
100000177	6513	5	7.512342			
100000177	6513	6	7.416334			
100000177	6513	7	8.993471			
100000177	6513	8	7.23442			
100000177	6513	9	8.484035			
100000177	6513	10	9.107947			
100000177	6514	1	15.153727	EXIT 104 WB OFF RAMP	N	PINEY GROVE RD
100000177	6514	2	13.859959			
100000177	6514	3	16.060754			
100000177	6514	4	15.692225			
100000177	6514	5	13.944177			
100000177	6514	6	14.227928			
100000177	6514	7	13.87963			
100000177	6514	8	14.094707			
100000177	6514	9	15.176166			
100000177	6514	10	12.039978			
100000178	3301	1	36.698932	RAMP	SE	ST ANDREWS RD
100000178	3301	2	35.631339			
100000178	3301	3	31.957907			
100000178	3301	4	30.860294			
100000178	3301	5	33.642321			
100000178	3301	6	32.030754			
100000178	3301	7	32.074524			
100000178	3301	8	34.343558			
100000178	3301	9	33.641752			
100000178	3301	10	29.897476			
100000178	5118	1	3.426165	ST ANDREWS RD	E	ST ANDREWS RD
100000178	5118	2	3.423171			
100000178	5118	3	3.165963			
100000178	5118	4	3.237556			
100000178	5118	5	3.271373			
100000178	5118	6	3.408524			
100000178	5118	7	3.161379			
100000178	5118	8	3.579635			
100000178	5118	9	3.557687			
100000178	5118	10	3.477919			
100000178	5119	1	22.812059	WOODLAND HILLS RD	N	ST ANDREWS RD
100000178	5119	2	21.673907			
100000178	5119	3	22.923782			
100000178	5119	4	24.250995			
100000178	5119	5	22.758986			
100000178	5119	6	22.050913			
100000178	5119	7	21.844402			
100000178	5119	8	22.185937			
100000178	5119	9	23.646879			
100000178	5119	10	20.860982			
100000178	5120	1	11.666761	ST ANDREWS RD	W	ST ANDREWS RD
100000178	5120	2	15.506267			
100000178	5120	3	13.533142			
100000178	5120	4	16.14561			
100000178	5120	5	11.799592			
100000178	5120	6	14.094846			
100000178	5120	7	14.139742			
100000178	5120	8	13.971493			
100000178	5120	9	12.109115			
100000178	5120	10	11.980367			
100000179	3219	1	0	RAMP	S	ST ANDREWS RD & RAMP
100000179	3219	2	0			
100000179	3219	3	0			
100000179	3219	4	0			
100000179	3219	5	0			
100000179	3219	6	0			
100000179	3219	7	0			
100000179	3219	8	0			
100000179	3219	9	0			
100000179	3219	10	0			
100000179	5116	1	30.068963	ST ANDREWS RD	E	ST ANDREWS RD & RAMP
100000179	5116	2	31.799652			
100000179	5116	3	33.217283			
100000179	5116	4	33.025858			
100000179	5116	5	35.140602			
100000179	5116	6	30.675573			
100000179	5116	7	31.359452			
100000179	5116	8	35.663918			
100000179	5116	9	31.720512			
100000179	5116	10	35.415901			
100000179	5118	1	0	ST ANDREWS RD	W	ST ANDREWS RD & RAMP
100000179	5118	2	0			
100000179	5118	3	0			
100000179	5118	4	0			
100000179	5118	5	0			
100000179	5118	6	0			
100000179	5118	7	0			
100000179	5118	8	0			
100000179	5118	9	0			
100000179	5118	10	0			
100000182	3292	1	0	EXIT 106 WB OFF RAMP	NE	ST ANDREWS RD
100000182	3292	2	0			
100000182	3292	3	0			
100000182	3292	4	0			
100000182	3292	5	0			
100000182	3292	6	0			
100000182	3292	7	0			
100000182	3292	8	0			
100000182	3292	9	0			
100000182	3292	10	0			
100000182	5123	1	0	ST ANDREWS RD	E	ST ANDREWS RD
100000182	5123	2	0			
100000182	5123	3	0			
100000182	5123	4	0			
100000182	5123	5	0			
100000182	5123	6	0			
100000182	5123	7	0			
100000182	5123	8	0			
100000182	5123	9	0			
100000182	5123	10	0			
100000182	5124	1	0	ST ANDREWS RD	SW	ST ANDREWS RD
100000182	5124	2	0			
100000182	5124	3	0			

Node	Superlink	Run	Average Control Delay	Approach Street Name	Direction	Intersection
100000182	5124	4	0			
100000182	5124	5	0			
100000182	5124	6	0			
100000182	5124	7	0			
100000182	5124	8	0			
100000182	5124	9	0			
100000182	5124	10	0			
100000184	5499	1	14.926277	N ARROWWOOD RD	S	ARROWWOOD RD
100000184	5499	2	15.384611			
100000184	5499	3	16.166694			
100000184	5499	4	16.707209			
100000184	5499	5	15.844921			
100000184	5499	6	18.299989			
100000184	5499	7	16.883326			
100000184	5499	8	17.969924			
100000184	5499	9	15.616818			
100000184	5499	10	15.24264			
100000184	5500	1	37.994839	ARROWWOOD RD	N	ARROWWOOD RD
100000184	5500	2	35.271508			
100000184	5500	3	36.019582			
100000184	5500	4	39.287191			
100000184	5500	5	34.492718			
100000184	5500	6	37.898511			
100000184	5500	7	40.155014			
100000184	5500	8	34.960072			
100000184	5500	9	37.845256			
100000184	5500	10	35.90826			
100000184	6497	1	9.571252	BUSH RIVER RD	W	ARROWWOOD RD
100000184	6497	2	8.740355			
100000184	6497	3	9.085887			
100000184	6497	4	7.998122			
100000184	6497	5	9.225334			
100000184	6497	6	9.769137			
100000184	6497	7	9.138748			
100000184	6497	8	9.880853			
100000184	6497	9	10.274839			
100000184	6497	10	9.665182			
100000184	6505	1	11.004291	BUSH RIVER RD	E	ARROWWOOD RD
100000184	6505	2	10.858343			
100000184	6505	3	12.021154			
100000184	6505	4	10.455526			
100000184	6505	5	11.812592			
100000184	6505	6	9.226489			
100000184	6505	7	10.853978			
100000184	6505	8	10.120553			
100000184	6505	9	10.414067			
100000184	6505	10	12.344073			
100000185	3230	1	24.205427	RAMP	W	GREYSTONE BLVD
100000185	3230	2	18.408389			
100000185	3230	3	22.779032			
100000185	3230	4	23.611368			
100000185	3230	5	25.585023			
100000185	3230	6	31.034209			
100000185	3230	7	16.670094			
100000185	3230	8	19.04905			
100000185	3230	9	20.169138			
100000185	3230	10	25.692104			
100000185	5140	1	0.216356	GREYSTONE BLVD	N	GREYSTONE BLVD
100000185	5140	2	0.349058			
100000185	5140	3	0.121238			
100000185	5140	4	0.248933			
100000185	5140	5	0.170971			
100000185	5140	6	0.345921			
100000185	5140	7	0.165109			
100000185	5140	8	0.107105			
100000185	5140	9	0			
100000185	5140	10	0.416838			
100000185	5141	1	0.297957	GREYSTONE BLVD	S	GREYSTONE BLVD
100000185	5141	2	0.788558			
100000185	5141	3	0.345806			
100000185	5141	4	0.66792			
100000185	5141	5	0.552055			
100000185	5141	6	0.826833			
100000185	5141	7	0.462494			
100000185	5141	8	0.545617			
100000185	5141	9	0.784223			
100000185	5141	10	0.923129			
100000186	4949	1	12.522201	SUNSET BLVD	W	HARBOR DR
100000186	4949	2	14.011233			
100000186	4949	3	9.551694			
100000186	4949	4	10.332491			
100000186	4949	5	12.100437			
100000186	4949	6	10.244918			
100000186	4949	7	11.249627			
100000186	4949	8	15.040831			
100000186	4949	9	12.925511			
100000186	4949	10	12.170851			
100000186	5386	1	169.237117	HARBOR DR	N	HARBOR DR
100000186	5386	2	246.814947			
100000186	5386	3	149.767245			
100000186	5386	4	136.968253			
100000186	5386	5	149.715186			
100000186	5386	6	165.685228			
100000186	5386	7	183.242727			
100000186	5386	8	230.287732			
100000186	5386	9	182.658251			
100000186	5386	10	168.525925			
100000186	5387	1	67.310099	E HOSPITAL DR	S	HARBOR DR
100000186	5387	2	73.61722			
100000186	5387	3	72.576151			
100000186	5387	4	60.328238			
100000186	5387	5	61.804945			
100000186	5387	6	76.221763			
100000186	5387	7	68.999691			
100000186	5387	8	83.743279			
100000186	5387	9	62.605005			
100000186	5387	10	60.008198			
100000186	6762	1	30.214514	SUNSET BLVD	E	HARBOR DR
100000186	6762	2	44.514599			
100000186	6762	3	33.094368			

Node	Superlink	Run	Average Control Delay	Approach Street Name	Direction	Intersection
100000186	6762	4	23.603819			
100000186	6762	5	26.801141			
100000186	6762	6	32.240349			
100000186	6762	7	31.498448			
100000186	6762	8	40.768486			
100000186	6762	9	22.380346			
100000186	6762	10	23.709371			
100000187	6057	1	25.031813	BROAD RIVER RD	NW	BROAD RIVER RD
100000187	6057	2	29.385681			
100000187	6057	3	24.789972			
100000187	6057	4	22.184506			
100000187	6057	5	22.942477			
100000187	6057	6	23.680311			
100000187	6057	7	26.789302			
100000187	6057	8	25.822349			
100000187	6057	9	23.734025			
100000187	6057	10	24.286713			
100000187	6059	1	41.084417	BROAD RIVER RD	SE	BROAD RIVER RD
100000187	6059	2	38.303315			
100000187	6059	3	33.559032			
100000187	6059	4	39.016536			
100000187	6059	5	37.440497			
100000187	6059	6	37.096643			
100000187	6059	7	37.755725			
100000187	6059	8	39.166873			
100000187	6059	9	39.844201			
100000187	6059	10	35.878244			
100000187	6060	1	511.463098	MARLEY DR	SW	BROAD RIVER RD
100000187	6060	2	358.359415			
100000187	6060	3	445.432885			
100000187	6060	4	376.948642			
100000187	6060	5	337.652391			
100000187	6060	6	457.889404			
100000187	6060	7	324.783472			
100000187	6060	8	581.014971			
100000187	6060	9	442.385192			
100000187	6060	10	254.137615			
100000187	6061	1	35.816641	BRIARGATE CIR	NE	BROAD RIVER RD
100000187	6061	2	39.595605			
100000187	6061	3	43.895086			
100000187	6061	4	43.227115			
100000187	6061	5	36.000476			
100000187	6061	6	37.683814			
100000187	6061	7	38.557904			
100000187	6061	8	48.063453			
100000187	6061	9	34.197186			
100000187	6061	10	41.674898			
100000188	3221	1	17.25889	RAMP	W	GREYSTONE BLVD & RAMP
100000188	3221	2	14.251144			
100000188	3221	3	15.029972			
100000188	3221	4	13.115302			
100000188	3221	5	10.60698			
100000188	3221	6	18.077381			
100000188	3221	7	18.334247			
100000188	3221	8	17.169383			
100000188	3221	9	15.538971			
100000188	3221	10	24.344009			
100000188	5143	1	0.504156	GREYSTONE BLVD	N	GREYSTONE BLVD & RAMP
100000188	5143	2	0.89586			
100000188	5143	3	0.715147			
100000188	5143	4	1.017033			
100000188	5143	5	0.414783			
100000188	5143	6	0.584676			
100000188	5143	7	0.585588			
100000188	5143	8	0.488723			
100000188	5143	9	0.716723			
100000188	5143	10	0.494983			
100000188	5144	1	0.014015	GREYSTONE BLVD	S	GREYSTONE BLVD & RAMP
100000188	5144	2	0.030364			
100000188	5144	3	0.028472			
100000188	5144	4	0.029649			
100000188	5144	5	0.039604			
100000188	5144	6	0.060603			
100000188	5144	7	0.031493			
100000188	5144	8	0.074621			
100000188	5144	9	0.048314			
100000188	5144	10	0.118317			
100000189	4346	1	46.439983	I-20 EXIT 65 WB OFF RAMP	SW	I-20 EXIT 65 WB OFF RAMP
100000189	4346	2	48.164048			
100000189	4346	3	52.79932			
100000189	4346	4	47.551846			
100000189	4346	5	48.244492			
100000189	4346	6	45.178646			
100000189	4346	7	45.880934			
100000189	4346	8	44.687662			
100000189	4346	9	51.918489			
100000189	4346	10	41.014701			
100000189	6057	1	79.22603	BROAD RIVER RD	SE	I-20 EXIT 65 WB OFF RAMP
100000189	6057	2	75.193371			
100000189	6057	3	69.179636			
100000189	6057	4	77.364519			
100000189	6057	5	77.514165			
100000189	6057	6	73.247834			
100000189	6057	7	77.729762			
100000189	6057	8	78.093817			
100000189	6057	9	78.760728			
100000189	6057	10	70.336653			
100000189	6447	1	10.955645	BROAD RIVER RD	NW	I-20 EXIT 65 WB OFF RAMP
100000189	6447	2	10.214582			
100000189	6447	3	10.363706			
100000189	6447	4	8.960695			
100000189	6447	5	11.073435			
100000189	6447	6	9.037722			
100000189	6447	7	7.993707			
100000189	6447	8	9.845755			
100000189	6447	9	9.223728			
100000189	6447	10	7.755572			
100000190	4341	1	44.673267	I-20 EXIT 65 EB OFF RAMP	E	BROAD RIVER RD
100000190	4341	2	46.382102			
100000190	4341	3	43.838345			

Node	Superlink	Run	Average Control Delay	Approach Street Name	Direction	Intersection
100000190	4341	4	43.915005			
100000190	4341	5	52.87			
100000190	4341	6	47.455307			
100000190	4341	7	48.70979			
100000190	4341	8	48.361938			
100000190	4341	9	47.490289			
100000190	4341	10	45.468118			
100000190	5148	1	1.726421	BROAD RIVER RD	SE	BROAD RIVER RD
100000190	5148	2	1.635962			
100000190	5148	3	1.6221			
100000190	5148	4	1.846072			
100000190	5148	5	1.716322			
100000190	5148	6	1.597215			
100000190	5148	7	1.695981			
100000190	5148	8	1.681938			
100000190	5148	9	1.736935			
100000190	5148	10	1.691858			
100000190	6445	1	13.58474	BROAD RIVER RD	NW	BROAD RIVER RD
100000190	6445	2	13.735447			
100000190	6445	3	14.29153			
100000190	6445	4	13.58886			
100000190	6445	5	12.399928			
100000190	6445	6	12.956504			
100000190	6445	7	14.363601			
100000190	6445	8	15.052062			
100000190	6445	9	12.986874			
100000190	6445	10	13.647963			
100000190	6446	1		SERVICE RD	SW	BROAD RIVER RD
100000190	6446	2				
100000190	6446	3				
100000190	6446	4				
100000190	6446	5				
100000190	6446	6				
100000190	6446	7				
100000190	6446	8				
100000190	6446	9				
100000190	6446	10				
100000191	5399	1	0.082774	HARBOR DR	S	HARBOR DR & OAKWOOD DR
100000191	5399	2	0.105249			
100000191	5399	3	0.031901			
100000191	5399	4	0.179893			
100000191	5399	5	0.324781			
100000191	5399	6	0			
100000191	5399	7	0.009161			
100000191	5399	8	0.001787			
100000191	5399	9	0.070893			
100000191	5399	10	0.138506			
100000191	5414	1	30.661653	OAKWOOD DR	NE	HARBOR DR & OAKWOOD DR
100000191	5414	2	36.134237			
100000191	5414	3	18.774454			
100000191	5414	4	6.491701			
100000191	5414	5	6.82492			
100000191	5414	6	6.683416			
100000191	5414	7	18.111152			
100000191	5414	8	38.82973			
100000191	5414	9	6.348297			
100000191	5414	10	10.856847			
100000191	5420	1	19.282328	HARBOR DR	N	HARBOR DR & OAKWOOD DR
100000191	5420	2	41.050734			
100000191	5420	3	19.457166			
100000191	5420	4	0.066036			
100000191	5420	5	0.070925			
100000191	5420	6	0.046988			
100000191	5420	7	0.045528			
100000191	5420	8	97.080048			
100000191	5420	9	0.043907			
100000191	5420	10	0.021767			
100000193	4350	1	32.159778	I-20 EXIT 68 EB OFF RAMP	E	BUCKNER RD
100000193	4350	2	45.260868			
100000193	4350	3	33.313126			
100000193	4350	4	37.005468			
100000193	4350	5	32.212929			
100000193	4350	6	32.282635			
100000193	4350	7	31.701927			
100000193	4350	8	38.513002			
100000193	4350	9	37.380636			
100000193	4350	10	33.345059			
100000193	5154	1	22.941068	MONTICELLO RD	N	BUCKNER RD
100000193	5154	2	21.743534			
100000193	5154	3	21.229506			
100000193	5154	4	23.707684			
100000193	5154	5	22.806375			
100000193	5154	6	20.868697			
100000193	5154	7	22.069527			
100000193	5154	8	21.813615			
100000193	5154	9	21.481425			
100000193	5154	10	23.190043			
100000193	5155	1	17.551652	MONTICELLO RD	SE	BUCKNER RD
100000193	5155	2	16.520653			
100000193	5155	3	16.541006			
100000193	5155	4	16.361941			
100000193	5155	5	16.713579			
100000193	5155	6	16.429801			
100000193	5155	7	15.553868			
100000193	5155	8	15.567197			
100000193	5155	9	18.266519			
100000193	5155	10	16.635542			
100000193	5163	1	9.693373	BUCKNER RD	SW	BUCKNER RD
100000193	5163	2	8.888066			
100000193	5163	3	10.924521			
100000193	5163	4	9.635895			
100000193	5163	5	10.600664			
100000193	5163	6	10.936704			
100000193	5163	7	10.89096			
100000193	5163	8	9.721542			
100000193	5163	9	10.372243			
100000193	5163	10	9.335373			
100000195	5150	1	4.979542	BROAD RIVER RD	SE	LONGCREEK DR & BROAD RIVER RD
100000195	5150	2	4.583904			
100000195	5150	3	4.987175			

Node	Superlink	Run	Average Control Delay	Approach Street Name	Direction	Intersection
100000195	5150	4	4.214702			
100000195	5150	5	5.491018			
100000195	5150	6	5.286231			
100000195	5150	7	4.886866			
100000195	5150	8	4.594966			
100000195	5150	9	4.825985			
100000195	5150	10	4.887737			
100000195	6049	1	5.200271	BROAD RIVER RD	NW	LONGCREEK DR & BROAD RIVER RD
100000195	6049	2	5.179983			
100000195	6049	3	6.621802			
100000195	6049	4	5.258333			
100000195	6049	5	6.70457			
100000195	6049	6	6.366502			
100000195	6049	7	5.918606			
100000195	6049	8	6.496394			
100000195	6049	9	5.57866			
100000195	6049	10	5.043459			
100000195	6052	1	14.342047	LONGCREEK DR	SW	LONGCREEK DR & BROAD RIVER RD
100000195	6052	2	14.683195			
100000195	6052	3	12.891718			
100000195	6052	4	15.01242			
100000195	6052	5	15.722436			
100000195	6052	6	16.474669			
100000195	6052	7	14.599653			
100000195	6052	8	15.517446			
100000195	6052	9	15.721452			
100000195	6052	10	14.858944			
100000196	5166	1	1.728825	MONTICELLO RD	SE	SERVICE RD
100000196	5166	2	1.852928			
100000196	5166	3	1.662882			
100000196	5166	4	1.528599			
100000196	5166	5	1.942351			
100000196	5166	6	1.955746			
100000196	5166	7	2.181769			
100000196	5166	8	1.812989			
100000196	5166	9	1.780405			
100000196	5166	10	1.462007			
100000196	5169	1	15.77181	SERVICE RD	SW	SERVICE RD
100000196	5169	2	11.590159			
100000196	5169	3	15.094389			
100000196	5169	4	16.056084			
100000196	5169	5	14.65349			
100000196	5169	6	19.689426			
100000196	5169	7	13.240354			
100000196	5169	8	13.071832			
100000196	5169	9	16.553834			
100000196	5169	10	15.517673			
100000196	5172	1	1.730602	MONTICELLO RD	NW	SERVICE RD
100000196	5172	2	1.708197			
100000196	5172	3	1.371693			
100000196	5172	4	1.463048			
100000196	5172	5	1.778472			
100000196	5172	6	1.615685			
100000196	5172	7	2.056937			
100000196	5172	8	1.784115			
100000196	5172	9	1.422726			
100000196	5172	10	1.418264			
100000198	4354	1	0	RAMP	N	RAMP & I-20 EXIT 68 EB ON RAMP
100000198	4354	2	0			
100000198	4354	3	0			
100000198	4354	4	0			
100000198	4354	5	0			
100000198	4354	6	0			
100000198	4354	7	0			
100000198	4354	8	0			
100000198	4354	9	0			
100000198	4354	10	0			
100000198	5158	1		RAMP	NW	RAMP & I-20 EXIT 68 EB ON RAMP
100000198	5158	2				
100000198	5158	3				
100000198	5158	4				
100000198	5158	5				
100000198	5158	6				
100000198	5158	7				
100000198	5158	8				
100000198	5158	9				
100000198	5158	10				
100000200	5174	1	8.756252	MONTICELLO RD	NW	MONTICELLO RD
100000200	5174	2	7.491982			
100000200	5174	3	7.731578			
100000200	5174	4	7.079236			
100000200	5174	5	7.637009			
100000200	5174	6	6.967813			
100000200	5174	7	6.955595			
100000200	5174	8	8.585981			
100000200	5174	9	7.98395			
100000200	5174	10	8.782068			
100000200	6041	1	5.98004	MONTICELLO RD	SE	MONTICELLO RD
100000200	6041	2	6.106563			
100000200	6041	3	5.235206			
100000200	6041	4	4.856279			
100000200	6041	5	5.062869			
100000200	6041	6	5.848582			
100000200	6041	7	5.842864			
100000200	6041	8	5.823549			
100000200	6041	9	5.041583			
100000200	6041	10	5.983876			
100000200	6044	1	14.12401	PEEPLES ST	NE	MONTICELLO RD
100000200	6044	2	13.428062			
100000200	6044	3	14.219152			
100000200	6044	4	13.638188			
100000200	6044	5	15.342388			
100000200	6044	6	15.895915			
100000200	6044	7	13.919791			
100000200	6044	8	15.054005			
100000200	6044	9	14.466857			
100000200	6044	10	11.42658			
100000200	6046	1	26.730194	BLUE RIDGE TER	S	MONTICELLO RD
100000200	6046	2	26.22914			
100000200	6046	3	25.635437			

Node	Superlink	Run	Average Control Delay	Approach Street Name	Direction	Intersection
100000200	6046	4	26.837449			
100000200	6046	5	25.585203			
100000200	6046	6	24.396253			
100000200	6046	7	26.459634			
100000200	6046	8	23.77576			
100000200	6046	9	27.274363			
100000200	6046	10	24.886228			
100000201	5157	1	1.656679	BUCKNER RD	SW	BUCKNER RD & TO BUCKNER ROAD
100000201	5157	2	1.364174			
100000201	5157	3	1.477983			
100000201	5157	4	1.736824			
100000201	5157	5	2.100394			
100000201	5157	6	1.480043			
100000201	5157	7	1.577102			
100000201	5157	8	1.748697			
100000201	5157	9	1.596998			
100000201	5157	10	1.72866			
100000201	5161	1	0.688601	TO BUCKNER ROAD	N	BUCKNER RD & TO BUCKNER ROAD
100000201	5161	2	2.295882			
100000201	5161	3	0.048573			
100000201	5161	4	0.058602			
100000201	5161	5	1.075859			
100000201	5161	6	0.563442			
100000201	5161	7	0			
100000201	5161	8	0.512476			
100000201	5161	9	0.016035			
100000201	5161	10	0.012			
100000201	5163	1	0.002433	BUCKNER RD	NE	BUCKNER RD & TO BUCKNER ROAD
100000201	5163	2	0.002434			
100000201	5163	3	0.004247			
100000201	5163	4	0.004568			
100000201	5163	5	0.003397			
100000201	5163	6	0.002648			
100000201	5163	7	0.004514			
100000201	5163	8	0.003506			
100000201	5163	9	0.003515			
100000201	5163	10	0.003124			
100000203	5169	1		SERVICE RD	E	SERVICE RD & MONTICELLO RD
100000203	5169	2				
100000203	5169	3				
100000203	5169	4				
100000203	5169	5				
100000203	5169	6				
100000203	5169	7				
100000203	5169	8				
100000203	5169	9				
100000203	5169	10				
100000203	5171	1		MONTICELLO RD	N	SERVICE RD & MONTICELLO RD
100000203	5171	2				
100000203	5171	3				
100000203	5171	4				
100000203	5171	5				
100000203	5171	6				
100000203	5171	7				
100000203	5171	8				
100000203	5171	9				
100000203	5171	10				
100000203	5173	1	0.367241	SERVICE RD	W	SERVICE RD & MONTICELLO RD
100000203	5173	2	0.694497			
100000203	5173	3	0.436909			
100000203	5173	4	0.335101			
100000203	5173	5	0.380621			
100000203	5173	6	0.369364			
100000203	5173	7	0.368546			
100000203	5173	8	0.554539			
100000203	5173	9	0.628113			
100000203	5173	10	0.35162			
100000250	6539	1	27.529848	BUSH RIVER RD	NW	E MEADOW CT/WOODLAND VILLAGE DR
100000250	6539	2	41.401287			
100000250	6539	3	44.490721			
100000250	6539	4	36.686303			
100000250	6539	5	32.711401			
100000250	6539	6	36.660606			
100000250	6539	7	37.016088			
100000250	6539	8	40.66532			
100000250	6539	9	23.969711			
100000250	6539	10	36.841512			
100000250	6546	1	23.817762	OUTLET POINTE BLVD	NE	E MEADOW CT/WOODLAND VILLAGE DR
100000250	6546	2	23.169105			
100000250	6546	3	28.390209			
100000250	6546	4	25.850408			
100000250	6546	5	28.408797			
100000250	6546	6	27.00709			
100000250	6546	7	20.612238			
100000250	6546	8	19.358917			
100000250	6546	9	25.633366			
100000250	6546	10	27.202172			
100000250	6547	1	27.36644	E MEADOW CT/WOODLAND VILLAGE DR	SW	E MEADOW CT/WOODLAND VILLAGE DR
100000250	6547	2	22.364426			
100000250	6547	3	22.866511			
100000250	6547	4	25.698898			
100000250	6547	5	27.863509			
100000250	6547	6	21.497805			
100000250	6547	7	19.411712			
100000250	6547	8	22.191568			
100000250	6547	9	24.204559			
100000250	6547	10	25.880381			
100000250	6548	1	35.189818	BUSH RIVER RD	SE	E MEADOW CT/WOODLAND VILLAGE DR
100000250	6548	2	41.563433			
100000250	6548	3	39.023446			
100000250	6548	4	42.010535			
100000250	6548	5	36.830176			
100000250	6548	6	40.060195			
100000250	6548	7	40.880876			
100000250	6548	8	35.7012			
100000250	6548	9	35.65869			
100000250	6548	10	38.280098			
100000252	5125	1	7.097471	BUSH RIVER RD	E	MORNINGHILL DR
100000252	5125	2	6.592178			
100000252	5125	3	6.628366			

Node	Superlink	Run	Average Control Delay	Approach Street Name	Direction	Intersection
100000252	5125	4	7.095531			
100000252	5125	5	6.587661			
100000252	5125	6	7.070317			
100000252	5125	7	6.720882			
100000252	5125	8	7.103062			
100000252	5125	9	6.78532			
100000252	5125	10	7.303385			
100000252	5487	1	84.075381	MORNINGHILL DR	S	MORNINGHILL DR
100000252	5487	2	88.437113			
100000252	5487	3	82.823354			
100000252	5487	4	82.911669			
100000252	5487	5	83.237026			
100000252	5487	6	77.45592			
100000252	5487	7	85.944376			
100000252	5487	8	83.580989			
100000252	5487	9	85.083182			
100000252	5487	10	88.837273			
100000252	5488	1	21.891141	RAMP	N	MORNINGHILL DR
100000252	5488	2	21.482787			
100000252	5488	3	20.970421			
100000252	5488	4	20.679042			
100000252	5488	5	20.946893			
100000252	5488	6	18.840177			
100000252	5488	7	22.073006			
100000252	5488	8	23.393015			
100000252	5488	9	21.293318			
100000252	5488	10	20.619946			
100000252	6505	1	28.509036	BUSH RIVER RD	W	MORNINGHILL DR
100000252	6505	2	28.075541			
100000252	6505	3	26.430246			
100000252	6505	4	24.65544			
100000252	6505	5	27.970721			
100000252	6505	6	27.593022			
100000252	6505	7	29.955512			
100000252	6505	8	27.199446			
100000252	6505	9	23.799577			
100000252	6505	10	24.207959			
100000255	5038	1	4.925964	BUSH RIVER RD	E	BUSH RIVER RD & INDEPENDENCE AVE
100000255	5038	2	4.980626			
100000255	5038	3	5.582222			
100000255	5038	4	5.02934			
100000255	5038	5	5.019891			
100000255	5038	6	4.472131			
100000255	5038	7	5.090786			
100000255	5038	8	4.868983			
100000255	5038	9	5.70912			
100000255	5038	10	4.22481			
100000255	5470	1	28.500276	INDEPENDENCE AVE	N	BUSH RIVER RD & INDEPENDENCE AVE
100000255	5470	2	34.504151			
100000255	5470	3	28.17051			
100000255	5470	4	30.59868			
100000255	5470	5	32.076529			
100000255	5470	6	32.559752			
100000255	5470	7	31.074544			
100000255	5470	8	32.300097			
100000255	5470	9	30.22109			
100000255	5470	10	33.398719			
100000255	5471	1	67.949962	BUSH RIVER RD	W	BUSH RIVER RD & INDEPENDENCE AVE
100000255	5471	2	126.932696			
100000255	5471	3	101.391888			
100000255	5471	4	116.664471			
100000255	5471	5	169.525494			
100000255	5471	6	176.097907			
100000255	5471	7	169.5278			
100000255	5471	8	113.856694			
100000255	5471	9	87.62763			
100000255	5471	10	88.967869			
100000256	5131	1	7.988859	BUSH RIVER RD	W	BUSH RIVER RD & ZIMALCREST DR
100000256	5131	2	8.454211			
100000256	5131	3	8.851805			
100000256	5131	4	7.071815			
100000256	5131	5	7.154571			
100000256	5131	6	7.053362			
100000256	5131	7	8.228677			
100000256	5131	8	7.775446			
100000256	5131	9	6.851479			
100000256	5131	10	7.055471			
100000256	5465	1	11.047592	BUSH RIVER RD	E	BUSH RIVER RD & ZIMALCREST DR
100000256	5465	2	10.701296			
100000256	5465	3	11.198807			
100000256	5465	4	11.026988			
100000256	5465	5	10.870309			
100000256	5465	6	10.667115			
100000256	5465	7	12.918762			
100000256	5465	8	10.374833			
100000256	5465	9	11.747463			
100000256	5465	10	10.087788			
100000256	5484	1	41.76394	ZIMALCREST DR	S	BUSH RIVER RD & ZIMALCREST DR
100000256	5484	2	37.8606			
100000256	5484	3	41.752055			
100000256	5484	4	49.456124			
100000256	5484	5	32.776374			
100000256	5484	6	46.214512			
100000256	5484	7	24.280371			
100000256	5484	8	35.85465			
100000256	5484	9	34.160049			
100000256	5484	10	42.926564			
100000256	5485	1	8.365163	ZIMALCREST DR	N	BUSH RIVER RD & ZIMALCREST DR
100000256	5485	2	9.802036			
100000256	5485	3	10.891722			
100000256	5485	4	8.699745			
100000256	5485	5	11.010285			
100000256	5485	6	11.62231			
100000256	5485	7	11.967505			
100000256	5485	8	12.45286			
100000256	5485	9	12.222443			
100000256	5485	10	10.05867			
100000259	5465	1	0	BUSH RIVER RD	W	NOTTINGWOOD DR & BUSH RIVER RD
100000259	5465	2	0			
100000259	5465	3	0			

Node	Superlink	Run	Average Control Delay	Approach Street Name	Direction	Intersection
100000259	5465	4	0			
100000259	5465	5	0			
100000259	5465	6	0			
100000259	5465	7	0			
100000259	5465	8	0			
100000259	5465	9	0			
100000259	5465	10	0			
100000259	5471	1	0	BUSH RIVER RD	E	NOTTINGWOOD DR & BUSH RIVER RD
100000259	5471	2	0			
100000259	5471	3	0			
100000259	5471	4	0			
100000259	5471	5	0			
100000259	5471	6	0			
100000259	5471	7	0			
100000259	5471	8	0			
100000259	5471	9	0			
100000259	5471	10	0			
100000259	5472	1		NOTTINGWOOD DR	S	NOTTINGWOOD DR & BUSH RIVER RD
100000259	5472	2				
100000259	5472	3				
100000259	5472	4				
100000259	5472	5				
100000259	5472	6				
100000259	5472	7				
100000259	5472	8				
100000259	5472	9				
100000259	5472	10				
100000262	5502	1	0.437615	BUSH RIVER RD	E	DUTCH SQUARE ENTRANCE
100000262	5502	2	0.583837			
100000262	5502	3	0.493697			
100000262	5502	4	0.66771			
100000262	5502	5	0.388447			
100000262	5502	6	0.6599			
100000262	5502	7	0.536339			
100000262	5502	8	0.367271			
100000262	5502	9	0.411803			
100000262	5502	10	0.394356			
100000262	5506	1	27.15993	COLONIAL LIFE BLVD W	N	DUTCH SQUARE ENTRANCE
100000262	5506	2	29.135162			
100000262	5506	3	27.710909			
100000262	5506	4	28.695019			
100000262	5506	5	27.076895			
100000262	5506	6	27.638473			
100000262	5506	7	26.54419			
100000262	5506	8	27.348006			
100000262	5506	9	27.806035			
100000262	5506	10	27.617122			
100000262	5509	1	58.167503	DUTCH SQUARE ENTRANCE	S	DUTCH SQUARE ENTRANCE
100000262	5509	2	53.510319			
100000262	5509	3	55.994134			
100000262	5509	4	55.752913			
100000262	5509	5	51.408688			
100000262	5509	6	63.493076			
100000262	5509	7	56.643934			
100000262	5509	8	60.444044			
100000262	5509	9	65.396266			
100000262	5509	10	59.697384			
100000262	5511	1	31.869472	BUSH RIVER RD	W	DUTCH SQUARE ENTRANCE
100000262	5511	2	21.105932			
100000262	5511	3	18.017685			
100000262	5511	4	19.858538			
100000262	5511	5	26.134967			
100000262	5511	6	21.318022			
100000262	5511	7	27.509963			
100000262	5511	8	24.438413			
100000262	5511	9	17.22877			
100000262	5511	10	18.879954			
100000263	5516	1	0.184938	COLONIAL LIFE BLVD W	N	COLONIAL LIFE BLVD W
100000263	5516	2	0.201136			
100000263	5516	3	0.208055			
100000263	5516	4	0.134929			
100000263	5516	5	0.20369			
100000263	5516	6	0.137249			
100000263	5516	7	0.173331			
100000263	5516	8	0.175942			
100000263	5516	9	0.119198			
100000263	5516	10	0.095587			
100000263	5520	1	12.420115	COLONIAL LIFE BLVD W	W	COLONIAL LIFE BLVD W
100000263	5520	2	9.604014			
100000263	5520	3	12.025061			
100000263	5520	4	10.332531			
100000263	5520	5	8.523287			
100000263	5520	6	10.249655			
100000263	5520	7	9.724089			
100000263	5520	8	11.447118			
100000263	5520	9	8.9785			
100000263	5520	10	10.416285			
100000263	6495	1	0.490827	COLONIAL LIFE BLVD W	S	COLONIAL LIFE BLVD W
100000263	6495	2	0.564272			
100000263	6495	3	0.842927			
100000263	6495	4	0.51114			
100000263	6495	5	0.590847			
100000263	6495	6	0.391183			
100000263	6495	7	0.668323			
100000263	6495	8	0.52336			
100000263	6495	9	0.409748			
100000263	6495	10	0.434057			
100000265	5139	1	15.657021	GREYSTONE BLVD	N	GREYSTONE BLVD & STONERIDGE DR
100000265	5139	2	12.379539			
100000265	5139	3	13.155876			
100000265	5139	4	13.457273			
100000265	5139	5	16.343493			
100000265	5139	6	15.178984			
100000265	5139	7	16.962412			
100000265	5139	8	16.580819			
100000265	5139	9	14.780091			
100000265	5139	10	11.913354			
100000265	5537	1	20.91805	STONERIDGE DR	W	GREYSTONE BLVD & STONERIDGE DR
100000265	5537	2	27.881363			
100000265	5537	3	26.470226			

Node	Superlink	Run	Average Control Delay	Approach Street Name	Direction	Intersection
100000265	5537	4	27.91242			
100000265	5537	5	22.504312			
100000265	5537	6	21.211141			
100000265	5537	7	27.463817			
100000265	5537	8	24.298189			
100000265	5537	9	26.799662			
100000265	5537	10	18.573116			
100000265	5556	1	17.053406	STONERIDGE DR	E	GREYSTONE BLVD & STONERIDGE DR
100000265	5556	2	14.891928			
100000265	5556	3	15.233509			
100000265	5556	4	12.659787			
100000265	5556	5	17.233727			
100000265	5556	6	14.434476			
100000265	5556	7	16.577648			
100000265	5556	8	16.653127			
100000265	5556	9	13.770602			
100000265	5556	10	14.469981			
100000265	6328	1	14.83207	GREYSTONE BLVD	S	GREYSTONE BLVD & STONERIDGE DR
100000265	6328	2	13.591916			
100000265	6328	3	15.041008			
100000265	6328	4	15.134813			
100000265	6328	5	16.483091			
100000265	6328	6	16.070057			
100000265	6328	7	17.300282			
100000265	6328	8	15.934094			
100000265	6328	9	15.044981			
100000265	6328	10	13.391143			
100000266	5545	1	60.409639	GREYSTONE BLVD	N	GREYSTONE BLVD & BROAD RIVER RD
100000266	5545	2	61.405309			
100000266	5545	3	64.995496			
100000266	5545	4	61.746917			
100000266	5545	5	65.588507			
100000266	5545	6	58.925686			
100000266	5545	7	58.45721			
100000266	5545	8	51.547017			
100000266	5545	9	60.993808			
100000266	5545	10	53.451216			
100000266	6325	1	3.770384	BROAD RIVER RD	W	GREYSTONE BLVD & BROAD RIVER RD
100000266	6325	2	4.719258			
100000266	6325	3	5.109593			
100000266	6325	4	3.97257			
100000266	6325	5	4.595669			
100000266	6325	6	4.833639			
100000266	6325	7	4.883484			
100000266	6325	8	5.04008			
100000266	6325	9	4.49529			
100000266	6325	10	4.324544			
100000266	6327	1	7.616574	BROAD RIVER RD	E	GREYSTONE BLVD & BROAD RIVER RD
100000266	6327	2	7.77912			
100000266	6327	3	8.044839			
100000266	6327	4	7.437599			
100000266	6327	5	7.466779			
100000266	6327	6	6.934274			
100000266	6327	7	8.424964			
100000266	6327	8	7.886964			
100000266	6327	9	9.017812			
100000266	6327	10	7.623598			
100000268	5565	1	31.06614	HUGER ST	N	HUGER ST & LAUREL ST
100000268	5565	2	30.208846			
100000268	5565	3	30.103322			
100000268	5565	4	30.112057			
100000268	5565	5	28.778004			
100000268	5565	6	28.922972			
100000268	5565	7	29.979481			
100000268	5565	8	30.27511			
100000268	5565	9	29.892018			
100000268	5565	10	31.93441			
100000268	5570	1	33.408606	LAUREL ST	E	HUGER ST & LAUREL ST
100000268	5570	2	33.040792			
100000268	5570	3	33.256704			
100000268	5570	4	32.441668			
100000268	5570	5	33.176636			
100000268	5570	6	33.378431			
100000268	5570	7	33.582847			
100000268	5570	8	32.727403			
100000268	5570	9	33.416673			
100000268	5570	10	33.074012			
100000268	5571	1	17.831655	HUGER ST	S	HUGER ST & LAUREL ST
100000268	5571	2	17.710893			
100000268	5571	3	17.245158			
100000268	5571	4	18.567779			
100000268	5571	5	17.946382			
100000268	5571	6	16.985913			
100000268	5571	7	17.57962			
100000268	5571	8	18.113548			
100000268	5571	9	18.581387			
100000268	5571	10	17.657478			
100000268	5581	1	49.174443	LAUREL ST	W	HUGER ST & LAUREL ST
100000268	5581	2	47.22448			
100000268	5581	3	46.155525			
100000268	5581	4	48.939522			
100000268	5581	5	47.933118			
100000268	5581	6	47.063318			
100000268	5581	7	47.713056			
100000268	5581	8	46.85133			
100000268	5581	9	46.528743			
100000268	5581	10	44.624217			
100000339	6083	1	26.89743	BROAD RIVER RD	NW	BROAD RIVER RD & ST ANDREWS RD
100000339	6083	2	22.000873			
100000339	6083	3	22.364812			
100000339	6083	4	28.518478			
100000339	6083	5	28.568177			
100000339	6083	6	25.959807			
100000339	6083	7	25.612331			
100000339	6083	8	27.342538			
100000339	6083	9	27.993328			
100000339	6083	10	27.49634			
100000339	6084	1	91.72605	BROAD RIVER RD	SE	BROAD RIVER RD & ST ANDREWS RD
100000339	6084	2	41.161608			
100000339	6084	3	48.258329			

Node	Superlink	Run	Average Control Delay	Approach Street Name	Direction	Intersection
100000339	6084	4	73.246935			
100000339	6084	5	71.761125			
100000339	6084	6	43.335041			
100000339	6084	7	65.246967			
100000339	6084	8	77.614475			
100000339	6084	9	85.634822			
100000339	6084	10	44.062191			
100000339	6085	1	67.267269	ST ANDREWS RD	SW	BROAD RIVER RD & ST ANDREWS RD
100000339	6085	2	67.459365			
100000339	6085	3	66.330286			
100000339	6085	4	65.55141			
100000339	6085	5	62.85536			
100000339	6085	6	63.638297			
100000339	6085	7	58.96115			
100000339	6085	8	81.009964			
100000339	6085	9	67.783144			
100000339	6085	10	60.617687			
100000339	6086	1	40.89417	ST ANDREWS RD	E	BROAD RIVER RD & ST ANDREWS RD
100000339	6086	2	38.138442			
100000339	6086	3	39.373197			
100000339	6086	4	45.400486			
100000339	6086	5	42.747379			
100000339	6086	6	39.250738			
100000339	6086	7	41.002892			
100000339	6086	8	50.36493			
100000339	6086	9	40.63368			
100000339	6086	10	40.490363			
100000343	6059	1	0.003841	BROAD RIVER RD	NW	NUNAMAKER DR & BROAD RIVER RD
100000343	6059	2	0.024234			
100000343	6059	3	0.007909			
100000343	6059	4	0.006558			
100000343	6059	5	0.009386			
100000343	6059	6	0.043826			
100000343	6059	7	0.002023			
100000343	6059	8	0.003632			
100000343	6059	9	0.006664			
100000343	6059	10	0.003667			
100000343	6063	1		NUNAMAKER DR	SW	NUNAMAKER DR & BROAD RIVER RD
100000343	6063	2				
100000343	6063	3				
100000343	6063	4				
100000343	6063	5				
100000343	6063	6				
100000343	6063	7				
100000343	6063	8				
100000343	6063	9				
100000343	6063	10				
100000343	6065	1	0.000531	BROAD RIVER RD	SE	NUNAMAKER DR & BROAD RIVER RD
100000343	6065	2	0.000228			
100000343	6065	3	0.001246			
100000343	6065	4	0.00082			
100000343	6065	5	0.00215			
100000343	6065	6	0.001662			
100000343	6065	7	0.005507			
100000343	6065	8	0.000593			
100000343	6065	9	0.000757			
100000343	6065	10	0.0006			
100000344	6065	1	5.604636	BROAD RIVER RD	NW	YOUNG DR
100000344	6065	2	6.089298			
100000344	6065	3	6.269995			
100000344	6065	4	5.640466			
100000344	6065	5	6.53349			
100000344	6065	6	5.391911			
100000344	6065	7	3.950953			
100000344	6065	8	6.393609			
100000344	6065	9	6.339985			
100000344	6065	10	6.836225			
100000344	6066	1	176.283082	BROAD RIVER RD	SE	YOUNG DR
100000344	6066	2	146.266224			
100000344	6066	3	134.360555			
100000344	6066	4	131.971582			
100000344	6066	5	158.080233			
100000344	6066	6	142.373712			
100000344	6066	7	153.438356			
100000344	6066	8	170.801528			
100000344	6066	9	142.197971			
100000344	6066	10	125.670808			
100000344	6067	1	104.042802	YOUNG DR	SW	YOUNG DR
100000344	6067	2	89.056686			
100000344	6067	3	88.849445			
100000344	6067	4	95.611346			
100000344	6067	5	100.339016			
100000344	6067	6	123.566042			
100000344	6067	7	74.649408			
100000344	6067	8	86.178127			
100000344	6067	9	116.008972			
100000344	6067	10	100.417209			
100000344	6068	1	39.752975	SEMINOLE RD	NE	YOUNG DR
100000344	6068	2	45.304791			
100000344	6068	3	36.590271			
100000344	6068	4	37.969822			
100000344	6068	5	39.314229			
100000344	6068	6	46.313878			
100000344	6068	7	38.300862			
100000344	6068	8	32.608798			
100000344	6068	9	52.926405			
100000344	6068	10	41.491224			
100000348	5116	1	6.499839	ST ANDREWS RD	NW	ST ANDREWS RD & JAMIL RD
100000348	5116	2	5.373201			
100000348	5116	3	6.619888			
100000348	5116	4	5.378619			
100000348	5116	5	4.818547			
100000348	5116	6	6.802032			
100000348	5116	7	5.81797			
100000348	5116	8	6.63756			
100000348	5116	9	6.289986			
100000348	5116	10	7.547032			
100000348	6114	1	12.057224	ST ANDREWS RD	E	ST ANDREWS RD & JAMIL RD
100000348	6114	2	13.449396			
100000348	6114	3	18.60294			

Node	Superlink	Run	Average Control Delay	Approach Street Name	Direction	Intersection
100000348	6114	4	15.984075			
100000348	6114	5	14.468137			
100000348	6114	6	15.685044			
100000348	6114	7	13.474232			
100000348	6114	8	20.023792			
100000348	6114	9	14.56689			
100000348	6114	10	16.889316			
100000348	6119	1	63.747053	JAMIL RD	S	ST ANDREWS RD & JAMIL RD
100000348	6119	2	64.552808			
100000348	6119	3	64.687392			
100000348	6119	4	58.835064			
100000348	6119	5	62.07424			
100000348	6119	6	63.155209			
100000348	6119	7	63.772829			
100000348	6119	8	66.00347			
100000348	6119	9	64.845495			
100000348	6119	10	62.484622			
100000349	6066	1	7.863746	BROAD RIVER RD	NW	ST ANDREWS PKY & BROAD RIVER RD
100000349	6066	2	6.533216			
100000349	6066	3	4.887974			
100000349	6066	4	6.150758			
100000349	6066	5	3.918546			
100000349	6066	6	3.15574			
100000349	6066	7	4.519063			
100000349	6066	8	4.981937			
100000349	6066	9	5.695658			
100000349	6066	10	6.671206			
100000349	6078	1	61.181371	ST ANDREWS PKY	SW	ST ANDREWS PKY & BROAD RIVER RD
100000349	6078	2	56.737507			
100000349	6078	3	72.57615			
100000349	6078	4	55.357217			
100000349	6078	5	68.518			
100000349	6078	6	61.632119			
100000349	6078	7	55.953626			
100000349	6078	8	53.982351			
100000349	6078	9	66.78794			
100000349	6078	10	67.485335			
100000349	6079	1		BROAD RIVER RD	NE	ST ANDREWS PKY & BROAD RIVER RD
100000349	6079	2				
100000349	6079	3				
100000349	6079	4				
100000349	6079	5				
100000349	6079	6				
100000349	6079	7				
100000349	6079	8				
100000349	6079	9				
100000349	6079	10				
100000349	6083	1	44.446817	BROAD RIVER RD	SE	ST ANDREWS PKY & BROAD RIVER RD
100000349	6083	2	30.905835			
100000349	6083	3	26.48022			
100000349	6083	4	33.992562			
100000349	6083	5	35.587505			
100000349	6083	6	27.363046			
100000349	6083	7	39.716641			
100000349	6083	8	38.103051			
100000349	6083	9	31.67772			
100000349	6083	10	22.324901			
100000353	5104	1	37.081867	PINEY GROVE RD	W	BOWER PKY
100000353	5104	2	33.130157			
100000353	5104	3	36.686648			
100000353	5104	4	35.457569			
100000353	5104	5	37.332617			
100000353	5104	6	39.891229			
100000353	5104	7	39.110977			
100000353	5104	8	44.241777			
100000353	5104	9	33.156947			
100000353	5104	10	41.718879			
100000353	6125	1	26.778192	BOWER PKY	SE	BOWER PKY
100000353	6125	2	28.471923			
100000353	6125	3	27.578936			
100000353	6125	4	28.190305			
100000353	6125	5	24.9229			
100000353	6125	6	23.524792			
100000353	6125	7	27.560011			
100000353	6125	8	26.211418			
100000353	6125	9	30.231527			
100000353	6125	10	24.630899			
100000353	6126	1	27.794981	PINEY GROVE RD	E	BOWER PKY
100000353	6126	2	30.145151			
100000353	6126	3	29.290524			
100000353	6126	4	28.666369			
100000353	6126	5	29.978414			
100000353	6126	6	30.531182			
100000353	6126	7	28.59605			
100000353	6126	8	35.264121			
100000353	6126	9	29.928979			
100000353	6126	10	29.614519			
100000353	6127	1	46.977805	JAMIL RD	NW	BOWER PKY
100000353	6127	2	39.880934			
100000353	6127	3	54.291429			
100000353	6127	4	46.019327			
100000353	6127	5	37.916873			
100000353	6127	6	44.302045			
100000353	6127	7	47.663654			
100000353	6127	8	41.604828			
100000353	6127	9	49.64835			
100000353	6127	10	44.114857			
100000354	6095	1	20.160265	ST ANDREWS RD	SW	ST ANDREWS RD
100000354	6095	2	19.125756			
100000354	6095	3	21.536892			
100000354	6095	4	20.129124			
100000354	6095	5	17.453347			
100000354	6095	6	21.249941			
100000354	6095	7	22.109711			
100000354	6095	8	19.37877			
100000354	6095	9	19.95582			
100000354	6095	10	17.344737			
100000354	6096	1	9.628363	ST ANDREWS RD	NE	ST ANDREWS RD
100000354	6096	2	9.943313			
100000354	6096	3	9.957412			

Node	Superlink	Run	Average Control Delay	Approach Street Name	Direction	Intersection
100000354	6096	4	10.148636			
100000354	6096	5	8.547601			
100000354	6096	6	9.76843			
100000354	6096	7	10.671051			
100000354	6096	8	11.152422			
100000354	6096	9	9.931106			
100000354	6096	10	9.800803			
100000354	6098	1	446.149902	CHARTWELL RD	NW	ST ANDREWS RD
100000354	6098	2	151.082928			
100000354	6098	3	373.692426			
100000354	6098	4	182.622394			
100000354	6098	5	393.821805			
100000354	6098	6	470.963436			
100000354	6098	7	431.834654			
100000354	6098	8	207.119147			
100000354	6098	9	255.490665			
100000354	6098	10	380.293205			
100000354	6099	1	99.301065	KAY ST	SE	ST ANDREWS RD
100000354	6099	2	101.087596			
100000354	6099	3	98.912191			
100000354	6099	4	111.046751			
100000354	6099	5	133.519482			
100000354	6099	6	116.161019			
100000354	6099	7	142.23259			
100000354	6099	8	113.64087			
100000354	6099	9	34.965841			
100000354	6099	10	111.730047			
100000356	6086	1	0.122295	ST ANDREWS RD	SW	LAWRENCE ST & ST ANDREWS RD
100000356	6086	2	0.190337			
100000356	6086	3	0.214458			
100000356	6086	4	0.228719			
100000356	6086	5	0.182275			
100000356	6086	6	0.207794			
100000356	6086	7	0.292101			
100000356	6086	8	0.261375			
100000356	6086	9	0.23288			
100000356	6086	10	0.207729			
100000356	6092	1	9.281758	LAWRENCE ST	SE	LAWRENCE ST & ST ANDREWS RD
100000356	6092	2	11.577576			
100000356	6092	3	9.07763			
100000356	6092	4	9.687633			
100000356	6092	5	10.261667			
100000356	6092	6	10.009346			
100000356	6092	7	10.15661			
100000356	6092	8	9.683914			
100000356	6092	9	11.107098			
100000356	6092	10	12.243766			
100000356	6094	1	0.687613	ST ANDREWS RD	NE	LAWRENCE ST & ST ANDREWS RD
100000356	6094	2	1.107561			
100000356	6094	3	0.6247			
100000356	6094	4	0.768381			
100000356	6094	5	0.744918			
100000356	6094	6	0.898911			
100000356	6094	7	0.780574			
100000356	6094	8	0.649371			
100000356	6094	9	0.671486			
100000356	6094	10	0.672141			
100000357	6119	1	1.405896	JAMIL RD	NW	JAMIL RD & PAISLEY LN
100000357	6119	2	1.579174			
100000357	6119	3	1.189315			
100000357	6119	4	1.146384			
100000357	6119	5	1.270879			
100000357	6119	6	1.369892			
100000357	6119	7	1.072938			
100000357	6119	8	1.162218			
100000357	6119	9	1.074963			
100000357	6119	10	0.993046			
100000357	6120	1	16.376938	PAISLEY LN	NE	JAMIL RD & PAISLEY LN
100000357	6120	2	15.273912			
100000357	6120	3	19.745046			
100000357	6120	4	15.475946			
100000357	6120	5	14.581999			
100000357	6120	6	33.603775			
100000357	6120	7	13.395479			
100000357	6120	8	18.249427			
100000357	6120	9	13.87716			
100000357	6120	10	17.540776			
100000357	6121	1	0.866727	JAMIL RD	SE	JAMIL RD & PAISLEY LN
100000357	6121	2	1.521024			
100000357	6121	3	1.210135			
100000357	6121	4	0.781077			
100000357	6121	5	1.027384			
100000357	6121	6	1.31466			
100000357	6121	7	1.317134			
100000357	6121	8	1.295765			
100000357	6121	9	1.63047			
100000357	6121	10	1.224246			
100000358	5117	1	12.116998	ST ANDREWS RD	NE	ST ANDREWS RD
100000358	5117	2	10.696276			
100000358	5117	3	11.34008			
100000358	5117	4	12.078988			
100000358	5117	5	10.653773			
100000358	5117	6	11.054829			
100000358	5117	7	11.905162			
100000358	5117	8	11.384569			
100000358	5117	9	11.122235			
100000358	5117	10	10.583442			
100000358	6100	1	16.27008	ST ANDREWS RD	SW	ST ANDREWS RD
100000358	6100	2	12.699603			
100000358	6100	3	15.41618			
100000358	6100	4	14.480133			
100000358	6100	5	15.44686			
100000358	6100	6	15.235309			
100000358	6100	7	15.180611			
100000358	6100	8	14.657479			
100000358	6100	9	15.072206			
100000358	6100	10	14.609164			
100000358	6101	1	28.112356	BURNING TREE RD	NW	ST ANDREWS RD
100000358	6101	2	35.586237			
100000358	6101	3	29.921597			

Node	Superlink	Run	Average Control Delay	Approach Street Name	Direction	Intersection
100000358	6101	4	28.119263			
100000358	6101	5	27.852836			
100000358	6101	6	27.672029			
100000358	6101	7	30.670414			
100000358	6101	8	30.644799			
100000358	6101	9	29.419183			
100000358	6101	10	32.587061			
100000358	6102	1	25.429546	FERNANDINA RD	SE	ST ANDREWS RD
100000358	6102	2	23.347732			
100000358	6102	3	22.589889			
100000358	6102	4	23.754029			
100000358	6102	5	20.943416			
100000358	6102	6	23.186259			
100000358	6102	7	28.165105			
100000358	6102	8	23.47421			
100000358	6102	9	22.556941			
100000358	6102	10	20.853145			
100000360	3294	1	17.697855	EXIT 106 WB OFF RAMP	NE	EXIT 106 WB OFF RAMP & BURNING TREE RD
100000360	3294	2	12.955081			
100000360	3294	3	13.565864			
100000360	3294	4	15.167303			
100000360	3294	5	11.780458			
100000360	3294	6	16.106854			
100000360	3294	7	14.336159			
100000360	3294	8	14.691232			
100000360	3294	9	13.568716			
100000360	3294	10	11.616605			
100000360	6101	1	0.051478	BURNING TREE RD	S	EXIT 106 WB OFF RAMP & BURNING TREE RD
100000360	6101	2	0.051412			
100000360	6101	3	0.052991			
100000360	6101	4	0.046522			
100000360	6101	5	0.132167			
100000360	6101	6	0.119281			
100000360	6101	7	0.043305			
100000360	6101	8	0.042286			
100000360	6101	9	0.090994			
100000360	6101	10	0.041182			
100000360	6105	1	0.017065	BURNING TREE RD	N	EXIT 106 WB OFF RAMP & BURNING TREE RD
100000360	6105	2	0.018863			
100000360	6105	3	0.025872			
100000360	6105	4	0.029587			
100000360	6105	5	0.030223			
100000360	6105	6	0.022744			
100000360	6105	7	0.030213			
100000360	6105	8	0.022035			
100000360	6105	9	0.022254			
100000360	6105	10	0.011008			
100000362	6134	1	12.640813	JAMIL RD	NW	HARBISON BLVD & JAMIL RD
100000362	6134	2	11.812937			
100000362	6134	3	8.44918			
100000362	6134	4	10.913548			
100000362	6134	5	13.704737			
100000362	6134	6	12.223742			
100000362	6134	7	10.93803			
100000362	6134	8	10.853024			
100000362	6134	9	12.098148			
100000362	6134	10	12.578707			
100000362	6137	1	1.591768	HARBISON BLVD	NE	HARBISON BLVD & JAMIL RD
100000362	6137	2	1.156001			
100000362	6137	3	1.09929			
100000362	6137	4	1.261751			
100000362	6137	5	1.270117			
100000362	6137	6	1.657408			
100000362	6137	7	1.419843			
100000362	6137	8	1.291695			
100000362	6137	9	0.935184			
100000362	6137	10	1.562158			
100000362	6473	1	0.047941	HARBISON BLVD	SW	HARBISON BLVD & JAMIL RD
100000362	6473	2	0.001391			
100000362	6473	3	0.001539			
100000362	6473	4	0.00369			
100000362	6473	5	0.003098			
100000362	6473	6	0.001593			
100000362	6473	7	0.002276			
100000362	6473	8	0.002194			
100000362	6473	9	0.001686			
100000362	6473	10	0.002516			
100000363	6125	1	0.479689	BOWER PKY	NW	BOWER PKY & JAMIL RD
100000363	6125	2	0.2924			
100000363	6125	3	0.235777			
100000363	6125	4	0.309554			
100000363	6125	5	0.361695			
100000363	6125	6	0.353258			
100000363	6125	7	0.357973			
100000363	6125	8	0.416831			
100000363	6125	9	0.264866			
100000363	6125	10	0.301636			
100000363	6134	1	12.790736	JAMIL RD	SW	BOWER PKY & JAMIL RD
100000363	6134	2	11.982745			
100000363	6134	3	10.95332			
100000363	6134	4	10.813412			
100000363	6134	5	10.678778			
100000363	6134	6	10.528995			
100000363	6134	7	10.198734			
100000363	6134	8	10.672031			
100000363	6134	9	11.124958			
100000363	6134	10	11.268498			
100000363	6160	1	0.523848	BOWER PKY	SE	BOWER PKY & JAMIL RD
100000363	6160	2	0.516742			
100000363	6160	3	0.534125			
100000363	6160	4	0.429221			
100000363	6160	5	0.467048			
100000363	6160	6	0.39856			
100000363	6160	7	0.348185			
100000363	6160	8	0.666693			
100000363	6160	9	0.484718			
100000363	6160	10	0.654421			
100000364	6145	1	3.561282	HARBISON BLVD	SW	HARBISON BLVD & COLUMBIANA DR
100000364	6145	2	2.88618			
100000364	6145	3	2.493524			

Node	Superlink	Run	Average Control Delay	Approach Street Name	Direction	Intersection
100000364	6145	4	2.371105			
100000364	6145	5	2.143394			
100000364	6145	6	2.775035			
100000364	6145	7	2.974472			
100000364	6145	8	3.223593			
100000364	6145	9	2.854742			
100000364	6145	10	2.88489			
100000364	6176	1	3.825322	HARBISON BLVD	NE	HARBISON BLVD & COLUMBIANA DR
100000364	6176	2	3.718805			
100000364	6176	3	3.575589			
100000364	6176	4	3.711763			
100000364	6176	5	4.140016			
100000364	6176	6	3.825251			
100000364	6176	7	3.528126			
100000364	6176	8	4.040667			
100000364	6176	9	3.38598			
100000364	6176	10	2.952163			
100000364	6177	1		COLUMBIANA DR	NW	HARBISON BLVD & COLUMBIANA DR
100000364	6177	2				
100000364	6177	3				
100000364	6177	4				
100000364	6177	5				
100000364	6177	6				
100000364	6177	7				
100000364	6177	8				
100000364	6177	9				
100000364	6177	10				
100000364	6196	1	48.161995	COLUMBIANA DR	SE	HARBISON BLVD & COLUMBIANA DR
100000364	6196	2	43.492655			
100000364	6196	3	42.21227			
100000364	6196	4	43.982942			
100000364	6196	5	44.444806			
100000364	6196	6	46.889875			
100000364	6196	7	46.604336			
100000364	6196	8	45.577043			
100000364	6196	9	44.470947			
100000364	6196	10	48.006894			
100000365	6137	1	7.670167	HARBISON BLVD	SW	COLUMBIANA CIR
100000365	6137	2	6.153712			
100000365	6137	3	8.222521			
100000365	6137	4	7.377472			
100000365	6137	5	8.809091			
100000365	6137	6	7.422993			
100000365	6137	7	8.210174			
100000365	6137	8	7.299796			
100000365	6137	9	9.386402			
100000365	6137	10	7.258114			
100000365	6140	1	16.570366	COLUMBIANA CIR	SE	COLUMBIANA CIR
100000365	6140	2	20.015646			
100000365	6140	3	19.907477			
100000365	6140	4	17.430055			
100000365	6140	5	18.008147			
100000365	6140	6	18.404027			
100000365	6140	7	18.399439			
100000365	6140	8	20.584349			
100000365	6140	9	15.319134			
100000365	6140	10	17.193719			
100000365	6145	1	12.345435	HARBISON BLVD	NE	COLUMBIANA CIR
100000365	6145	2	11.974414			
100000365	6145	3	12.734261			
100000365	6145	4	11.634825			
100000365	6145	5	11.803359			
100000365	6145	6	12.792466			
100000365	6145	7	12.530433			
100000365	6145	8	12.066689			
100000365	6145	9	11.192289			
100000365	6145	10	10.871846			
100000365	6151	1	28.108205	PARK TERRACE DR	NW	COLUMBIANA CIR
100000365	6151	2	30.60701			
100000365	6151	3	31.64295			
100000365	6151	4	33.735913			
100000365	6151	5	31.055823			
100000365	6151	6	26.932215			
100000365	6151	7	33.066758			
100000365	6151	8	26.705167			
100000365	6151	9	29.688146			
100000365	6151	10	33.066678			
100000374	6151	1	35.464648	PARK TERRACE DR	S	BOWER PKY
100000374	6151	2	37.235533			
100000374	6151	3	33.679867			
100000374	6151	4	38.176205			
100000374	6151	5	33.405367			
100000374	6151	6	41.896223			
100000374	6151	7	33.756731			
100000374	6151	8	36.226479			
100000374	6151	9	35.385998			
100000374	6151	10	37.007977			
100000374	6160	1	7.529844	BOWER PKY	W	BOWER PKY
100000374	6160	2	8.040373			
100000374	6160	3	7.609519			
100000374	6160	4	7.056383			
100000374	6160	5	8.25172			
100000374	6160	6	8.472988			
100000374	6160	7	7.954821			
100000374	6160	8	9.572246			
100000374	6160	9	9.09511			
100000374	6160	10	8.768834			
100000374	6161	1	4.243927		N	BOWER PKY
100000374	6161	2	4.153871			
100000374	6161	3	3.739287			
100000374	6161	4	4.751614			
100000374	6161	5	4.430348			
100000374	6161	6	4.326764			
100000374	6161	7	4.24812			
100000374	6161	8	4.595052			
100000374	6161	9	3.731224			
100000374	6161	10	3.976505			
100000374	6162	1		BOWER PKY	E	BOWER PKY
100000374	6162	2				
100000374	6162	3				

Node	Superlink	Run	Average Control Delay	Approach Street Name	Direction	Intersection
100000374	6162	4				
100000374	6162	5				
100000374	6162	6				
100000374	6162	7				
100000374	6162	8				
100000374	6162	9				
100000374	6162	10				
100000375	6196	1	3.865219	COLUMBIANA DR	NW	COLUMBIANA DR
100000375	6196	2	1.726568			
100000375	6196	3	2.850172			
100000375	6196	4	2.680514			
100000375	6196	5	4.182298			
100000375	6196	6	1.850997			
100000375	6196	7	3.103039			
100000375	6196	8	2.663729			
100000375	6196	9	3.267801			
100000375	6196	10	1.309753			
100000375	6204	1	3.331743	COLUMBIANA DR	SE	COLUMBIANA DR
100000375	6204	2	2.801			
100000375	6204	3	2.278629			
100000375	6204	4	2.53726			
100000375	6204	5	2.518004			
100000375	6204	6	2.653799			
100000375	6204	7	2.912583			
100000375	6204	8	2.313584			
100000375	6204	9	3.080628			
100000375	6204	10	2.685711			
100000375	6550	1	14.230621	CROSSBOW DR	NE	COLUMBIANA DR
100000375	6550	2	10.729398			
100000375	6550	3	9.479531			
100000375	6550	4	12.931903			
100000375	6550	5	11.602829			
100000375	6550	6	12.706341			
100000375	6550	7	11.600397			
100000375	6550	8	13.415859			
100000375	6550	9	12.672749			
100000375	6550	10	8.631629			
100000375	6551	1	15.324042	DRIVEWAY	SW	COLUMBIANA DR
100000375	6551	2	13.287367			
100000375	6551	3	13.588741			
100000375	6551	4	11.718079			
100000375	6551	5	10.019019			
100000375	6551	6	8.076237			
100000375	6551	7	13.460759			
100000375	6551	8	9.724309			
100000375	6551	9	12.416984			
100000375	6551	10	13.29792			
100000391	5071	1	5.263048	BROAD RIVER RD	NW	BROAD RIVER RD & COLUMBIANA DR
100000391	5071	2	5.576676			
100000391	5071	3	4.662073			
100000391	5071	4	4.616058			
100000391	5071	5	4.921804			
100000391	5071	6	4.362167			
100000391	5071	7	4.787345			
100000391	5071	8	3.682559			
100000391	5071	9	4.998469			
100000391	5071	10	4.409894			
100000391	6214	1	48.359536	COLUMBIANA DR	NE	BROAD RIVER RD & COLUMBIANA DR
100000391	6214	2	54.256119			
100000391	6214	3	43.274842			
100000391	6214	4	50.65955			
100000391	6214	5	53.672948			
100000391	6214	6	45.348288			
100000391	6214	7	62.056889			
100000391	6214	8	65.045037			
100000391	6214	9	48.300524			
100000391	6214	10	43.635372			
100000391	6224	1	31.010931	BROAD RIVER RD	SE	BROAD RIVER RD & COLUMBIANA DR
100000391	6224	2	30.151133			
100000391	6224	3	31.042308			
100000391	6224	4	34.080335			
100000391	6224	5	30.014312			
100000391	6224	6	32.076255			
100000391	6224	7	31.674842			
100000391	6224	8	32.822328			
100000391	6224	9	33.907503			
100000391	6224	10	33.476619			
100000392	6121	1	0.754508	JAMIL RD	NW	TRAM RD & JAMIL RD
100000392	6121	2	0.556982			
100000392	6121	3	0.70267			
100000392	6121	4	0.542946			
100000392	6121	5	0.860788			
100000392	6121	6	1.286085			
100000392	6121	7	0.74259			
100000392	6121	8	0.564517			
100000392	6121	9	0.484361			
100000392	6121	10	0.823195			
100000392	6127	1	0.634361	JAMIL RD	SE	TRAM RD & JAMIL RD
100000392	6127	2	0.076578			
100000392	6127	3	0.058291			
100000392	6127	4	0.029386			
100000392	6127	5	0.149408			
100000392	6127	6	0.341592			
100000392	6127	7	0.047255			
100000392	6127	8	0.352071			
100000392	6127	9	0.032318			
100000392	6127	10	0.404711			
100000392	6261	1	7.707756	TRAM RD	NE	TRAM RD & JAMIL RD
100000392	6261	2	7.758841			
100000392	6261	3	7.470479			
100000392	6261	4	7.510844			
100000392	6261	5	7.985481			
100000392	6261	6	8.158479			
100000392	6261	7	7.80556			
100000392	6261	8	8.061919			
100000392	6261	9	7.663667			
100000392	6261	10	7.541046			
100000394	6204	1	0	COLUMBIANA DR	NW	COLUMBIANA DR
100000394	6204	2	0			
100000394	6204	3	0			

Node	Superlink	Run	Average Control Delay	Approach Street Name	Direction	Intersection
100000394	6204	4	0			
100000394	6204	5	0			
100000394	6204	6	0			
100000394	6204	7	0			
100000394	6204	8	0			
100000394	6204	9	0			
100000394	6204	10	0			
100000394	6208	1	0	COLUMBIANA DR	SE	COLUMBIANA DR
100000394	6208	2	0			
100000394	6208	3	0			
100000394	6208	4	0			
100000394	6208	5	0			
100000394	6208	6	0			
100000394	6208	7	0			
100000394	6208	8	0			
100000394	6208	9	0			
100000394	6208	10	0			
100000394	6210	1		COLUMBIA AVE	NE	COLUMBIANA DR
100000394	6210	2				
100000394	6210	3				
100000394	6210	4				
100000394	6210	5				
100000394	6210	6				
100000394	6210	7				
100000394	6210	8				
100000394	6210	9				
100000394	6210	10				
100000394	6549	1		DRIVEWAY	SW	COLUMBIANA DR
100000394	6549	2				
100000394	6549	3				
100000394	6549	4				
100000394	6549	5				
100000394	6549	6				
100000394	6549	7				
100000394	6549	8				
100000394	6549	9				
100000394	6549	10				
100000395	5084	1	70.800254	LAKE MURRAY BLVD	W	LAKE MURRAY BLVD & COLUMBIANA DR
100000395	5084	2	82.977731			
100000395	5084	3	100.561342			
100000395	5084	4	80.818891			
100000395	5084	5	70.901034			
100000395	5084	6	62.619462			
100000395	5084	7	75.287621			
100000395	5084	8	66.679415			
100000395	5084	9	50.371368			
100000395	5084	10	74.188258			
100000395	6208	1	36.632015	COLUMBIANA DR	NW	LAKE MURRAY BLVD & COLUMBIANA DR
100000395	6208	2	35.969438			
100000395	6208	3	37.279542			
100000395	6208	4	36.008004			
100000395	6208	5	38.341222			
100000395	6208	6	38.90493			
100000395	6208	7	40.349519			
100000395	6208	8	38.003975			
100000395	6208	9	34.886178			
100000395	6208	10	39.945714			
100000395	6214	1	50.032829	COLUMBIANA DR	S	LAKE MURRAY BLVD & COLUMBIANA DR
100000395	6214	2	47.007632			
100000395	6214	3	86.973287			
100000395	6214	4	104.891391			
100000395	6214	5	35.161908			
100000395	6214	6	40.79851			
100000395	6214	7	85.19383			
100000395	6214	8	40.829942			
100000395	6214	9	58.895213			
100000395	6214	10	66.193925			
100000395	6215	1	77.598379	LAKE MURRAY BLVD	E	LAKE MURRAY BLVD & COLUMBIANA DR
100000395	6215	2	57.930174			
100000395	6215	3	68.149686			
100000395	6215	4	40.344287			
100000395	6215	5	49.702728			
100000395	6215	6	54.761192			
100000395	6215	7	65.588079			
100000395	6215	8	73.099127			
100000395	6215	9	67.039195			
100000395	6215	10	76.095809			
100000398	5101	1	0	HARBISON BLVD	W	HARBISON BLVD & PARKRIDGE DR
100000398	5101	2	0.005537			
100000398	5101	3	0.000821			
100000398	5101	4	0			
100000398	5101	5	0.001165			
100000398	5101	6	0.259312			
100000398	5101	7	0			
100000398	5101	8	0.001669			
100000398	5101	9	0.026005			
100000398	5101	10	0.123858			
100000398	6267	1	9.46372	PARKRIDGE DR	SE	HARBISON BLVD & PARKRIDGE DR
100000398	6267	2	9.024678			
100000398	6267	3	8.610144			
100000398	6267	4	8.550854			
100000398	6267	5	8.304559			
100000398	6267	6	9.018782			
100000398	6267	7	8.626638			
100000398	6267	8	9.040517			
100000398	6267	9	8.925801			
100000398	6267	10	9.356195			
100000398	6268	1	0.2957	HARBISON BLVD	NE	HARBISON BLVD & PARKRIDGE DR
100000398	6268	2	0.191889			
100000398	6268	3	0			
100000398	6268	4	0.293083			
100000398	6268	5	1.149574			
100000398	6268	6	0			
100000398	6268	7	0			
100000398	6268	8	0			
100000398	6268	9	0.065643			
100000398	6268	10	0.294076			
100000399	5113	1	44.19011	PINEY GROVE RD	E	PINEY GROVE RD & FERNANDINA RD
100000399	5113	2	42.296123			
100000399	5113	3	45.811948			

Node	Superlink	Run	Average Control Delay	Approach Street Name	Direction	Intersection
100000399	5113	4	48.001196			
100000399	5113	5	35.796582			
100000399	5113	6	36.190922			
100000399	5113	7	47.076655			
100000399	5113	8	39.321223			
100000399	5113	9	44.854094			
100000399	5113	10	49.360402			
100000399	6263	1	22.153959	PINEY GROVE RD	W	PINEY GROVE RD & FERNANDINA RD
100000399	6263	2	24.998282			
100000399	6263	3	29.857749			
100000399	6263	4	23.198528			
100000399	6263	5	22.658865			
100000399	6263	6	20.392787			
100000399	6263	7	25.908549			
100000399	6263	8	42.788505			
100000399	6263	9	26.459901			
100000399	6263	10	30.634276			
100000399	6265	1	10.462585	FERNANDINA RD	SE	PINEY GROVE RD & FERNANDINA RD
100000399	6265	2	9.488691			
100000399	6265	3	10.556856			
100000399	6265	4	7.838242			
100000399	6265	5	10.531379			
100000399	6265	6	10.794552			
100000399	6265	7	9.652012			
100000399	6265	8	9.408769			
100000399	6265	9	9.584114			
100000399	6265	10	9.974134			
100000399	6266	1	20.280553	FERNANDINA RD	N	PINEY GROVE RD & FERNANDINA RD
100000399	6266	2	27.839662			
100000399	6266	3	32.013047			
100000399	6266	4	20.974788			
100000399	6266	5	38.244542			
100000399	6266	6	17.591988			
100000399	6266	7	58.504382			
100000399	6266	8	43.801504			
100000399	6266	9	41.165014			
100000399	6266	10	29.676039			
100000401	5093	1	11.417695	LAKE MURRAY BLVD	E	KINLEY RD
100000401	5093	2	9.934692			
100000401	5093	3	10.859877			
100000401	5093	4	9.696791			
100000401	5093	5	9.188301			
100000401	5093	6	10.823358			
100000401	5093	7	9.771419			
100000401	5093	8	11.101126			
100000401	5093	9	11.234935			
100000401	5093	10	11.659137			
100000401	6276	1	30.20223	KINLEY RD	S	KINLEY RD
100000401	6276	2	26.472191			
100000401	6276	3	22.064378			
100000401	6276	4	21.620549			
100000401	6276	5	27.54567			
100000401	6276	6	23.704091			
100000401	6276	7	21.149696			
100000401	6276	8	24.171307			
100000401	6276	9	25.410169			
100000401	6276	10	25.540362			
100000401	6313	1	17.228222	LAKE MURRAY BLVD	W	KINLEY RD
100000401	6313	2	21.259673			
100000401	6313	3	17.981804			
100000401	6313	4	18.659078			
100000401	6313	5	17.42123			
100000401	6313	6	17.106015			
100000401	6313	7	16.146624			
100000401	6313	8	15.00132			
100000401	6313	9	16.295047			
100000401	6313	10	18.089474			
100000401	6556	1	42.290902	PARKRIDGE DR	N	KINLEY RD
100000401	6556	2	31.291264			
100000401	6556	3	33.430817			
100000401	6556	4	46.238082			
100000401	6556	5	39.07018			
100000401	6556	6	41.628786			
100000401	6556	7	37.353853			
100000401	6556	8	40.453281			
100000401	6556	9	42.49144			
100000401	6556	10	34.68653			
100000438	2044	1	0	RAMP	SE	RAMP
100000438	2044	2	0			
100000438	2044	3	0			
100000438	2044	4	0			
100000438	2044	5	0			
100000438	2044	6	0			
100000438	2044	7	0			
100000438	2044	8	0			
100000438	2044	9	0			
100000438	2044	10	0			
100000438	5021	1	3.94753	SUNSET BLVD	NW	RAMP
100000438	5021	2	4.782709			
100000438	5021	3	4.378834			
100000438	5021	4	4.368887			
100000438	5021	5	4.463146			
100000438	5021	6	4.937494			
100000438	5021	7	4.911321			
100000438	5021	8	3.835412			
100000438	5021	9	4.427274			
100000438	5021	10	5.195776			
100000438	5023	1	0.239754	SUNSET BLVD	SE	RAMP
100000438	5023	2	0.027659			
100000438	5023	3	0.062864			
100000438	5023	4	0.058198			
100000438	5023	5	0.060169			
100000438	5023	6	0.054754			
100000438	5023	7	0.226427			
100000438	5023	8	0.13136			
100000438	5023	9	0.042692			
100000438	5023	10	0.070648			
100000446	2047	1	0	RAMP	S	RAMP & I-20 EXIT 63 WB ON RAMP
100000446	2047	2	0			
100000446	2047	3	0			

Node	Superlink	Run	Average Control Delay	Approach Street Name	Direction	Intersection
100000446	2047	4	0			
100000446	2047	5	0			
100000446	2047	6	0			
100000446	2047	7	0			
100000446	2047	8	0			
100000446	2047	9	0			
100000446	2047	10	0			
100000446	2059	1	0	RAMP	SW	RAMP & I-20 EXIT 63 WB ON RAMP
100000446	2059	2	0			
100000446	2059	3	0			
100000446	2059	4	0			
100000446	2059	5	0			
100000446	2059	6	0			
100000446	2059	7	0			
100000446	2059	8	0			
100000446	2059	9	0			
100000446	2059	10	0			
100000450	2060	1	0	RAMP	E	BUSH RIVER RD
100000450	2060	2	0			
100000450	2060	3	0			
100000450	2060	4	0			
100000450	2060	5	0			
100000450	2060	6	0			
100000450	2060	7	0			
100000450	2060	8	0			
100000450	2060	9	0			
100000450	2060	10	0			
100000450	5037	1	0	BUSH RIVER RD	E	BUSH RIVER RD
100000450	5037	2	0			
100000450	5037	3	0			
100000450	5037	4	0			
100000450	5037	5	0			
100000450	5037	6	0			
100000450	5037	7	0			
100000450	5037	8	0			
100000450	5037	9	0			
100000450	5037	10	0			
100000450	5038	1	1.131718	BUSH RIVER RD	NW	BUSH RIVER RD
100000450	5038	2	1.536568			
100000450	5038	3	1.691			
100000450	5038	4	1.877317			
100000450	5038	5	1.832426			
100000450	5038	6	1.960367			
100000450	5038	7	1.773519			
100000450	5038	8	1.990214			
100000450	5038	9	1.691596			
100000450	5038	10	1.847246			
100000452	2071	1	20.853941	RAMP	W	RAMP & BUSH RIVER RD
100000452	2071	2	26.060937			
100000452	2071	3	27.870371			
100000452	2071	4	20.790697			
100000452	2071	5	22.230833			
100000452	2071	6	18.474444			
100000452	2071	7	23.971202			
100000452	2071	8	19.864894			
100000452	2071	9	18.369254			
100000452	2071	10	20.999162			
100000452	5034	1	0.335855	BUSH RIVER RD	NW	RAMP & BUSH RIVER RD
100000452	5034	2	0.843978			
100000452	5034	3	0.70048			
100000452	5034	4	0.134015			
100000452	5034	5	0.157496			
100000452	5034	6	0.289044			
100000452	5034	7	0.355432			
100000452	5034	8	0.349983			
100000452	5034	9	0.176145			
100000452	5034	10	0.197035			
100000452	5457	1	8.260413	BUSH RIVER RD	SE	RAMP & BUSH RIVER RD
100000452	5457	2	8.45863			
100000452	5457	3	8.062584			
100000452	5457	4	8.51657			
100000452	5457	5	7.400584			
100000452	5457	6	5.58568			
100000452	5457	7	7.374822			
100000452	5457	8	8.921542			
100000452	5457	9	7.441391			
100000452	5457	10	7.692269			
100000455	5457	1	4.384137	BUSH RIVER RD	NW	FRONTAGE RD & BUSH RIVER RD
100000455	5457	2	4.902425			
100000455	5457	3	5.916895			
100000455	5457	4	4.751048			
100000455	5457	5	3.708041			
100000455	5457	6	4.030367			
100000455	5457	7	4.256791			
100000455	5457	8	4.431679			
100000455	5457	9	3.163982			
100000455	5457	10	4.089549			
100000455	6538	1	49.47275	FRONTAGE RD	SW	FRONTAGE RD & BUSH RIVER RD
100000455	6538	2	42.600883			
100000455	6538	3	47.312332			
100000455	6538	4	40.176595			
100000455	6538	5	41.61488			
100000455	6538	6	40.412058			
100000455	6538	7	44.649475			
100000455	6538	8	35.032689			
100000455	6538	9	35.948427			
100000455	6538	10	37.655376			
100000455	6539	1	5.47135	BUSH RIVER RD	SE	FRONTAGE RD & BUSH RIVER RD
100000455	6539	2	6.262291			
100000455	6539	3	4.074432			
100000455	6539	4	5.593152			
100000455	6539	5	4.222594			
100000455	6539	6	3.14483			
100000455	6539	7	5.105433			
100000455	6539	8	5.030189			
100000455	6539	9	5.00068			
100000455	6539	10	5.20712			
100000467	3225	1		RAMP	SW	RAMP & I-126 WB ON RAMP FROM GREYSTONE BLVD
100000467	3225	2				
100000467	3225	3				

Node	Superlink	Run	Average Control Delay	Approach Street Name	Direction	Intersection
100000467	3225	4				
100000467	3225	5				
100000467	3225	6				
100000467	3225	7				
100000467	3225	8				
100000467	3225	9				
100000467	3225	10				
100000467	3238	1	0	RAMP	W	RAMP & I-126 WB ON RAMP FROM GREYSTONE BLVD
100000467	3238	2	0			
100000467	3238	3	0			
100000467	3238	4	0			
100000467	3238	5	0			
100000467	3238	6	0			
100000467	3238	7	0			
100000467	3238	8	0			
100000467	3238	9	0			
100000467	3238	10	0			
100000468	3228	1	0	EXIT 103 WB ON RAMP	NW	EXIT 103 WB ON RAMP & I-26 EXIT 103 WB ON RAMP
100000468	3228	2	0			
100000468	3228	3	0			
100000468	3228	4	0			
100000468	3228	5	0			
100000468	3228	6	0			
100000468	3228	7	0			
100000468	3228	8	0			
100000468	3228	9	0			
100000468	3228	10	0			
100000468	3241	1		EXIT 103 WB ON RAMP	W	EXIT 103 WB ON RAMP & I-26 EXIT 103 WB ON RAMP
100000468	3241	2	0			
100000468	3241	3				
100000468	3241	4				
100000468	3241	5				
100000468	3241	6				
100000468	3241	7				
100000468	3241	8				
100000468	3241	9	0			
100000468	3241	10	0			
100000476	3257	1	0	RAMP	N	RAMP
100000476	3257	2	0			
100000476	3257	3	0			
100000476	3257	4	0			
100000476	3257	5	0			
100000476	3257	6	0			
100000476	3257	7	0			
100000476	3257	8	0			
100000476	3257	9	0			
100000476	3257	10	0			
100000476	3262	1	0	RAMP	N	RAMP
100000476	3262	2	0			
100000476	3262	3	0			
100000476	3262	4	0			
100000476	3262	5	0			
100000476	3262	6	0			
100000476	3262	7	0			
100000476	3262	8	0			
100000476	3262	9	0			
100000476	3262	10	0			
100000494	3302	1		EXIT 106 WB ON RAMP	NW	EXIT 106 WB ON RAMP & I-26 EXIT 106 WB ON RAMP
100000494	3302	2				
100000494	3302	3				
100000494	3302	4				
100000494	3302	5				
100000494	3302	6				
100000494	3302	7				
100000494	3302	8				
100000494	3302	9				
100000494	3302	10				
100000494	3306	1	0	EXIT 106 WB ON RAMP	NW	EXIT 106 WB ON RAMP & I-26 EXIT 106 WB ON RAMP
100000494	3306	2	0			
100000494	3306	3	0			
100000494	3306	4	0			
100000494	3306	5	0			
100000494	3306	6	0			
100000494	3306	7	0			
100000494	3306	8	0			
100000494	3306	9	0			
100000494	3306	10	0			
100000497	3310	1	0	RAMP	SE	RAMP & I-26 EXIT 104 EB ON RAMP
100000497	3310	2	0			
100000497	3310	3	0			
100000497	3310	4	0			
100000497	3310	5	0			
100000497	3310	6	0			
100000497	3310	7	0			
100000497	3310	8	0			
100000497	3310	9	0			
100000497	3310	10	0			
100000497	6545	1	0	RAMP	SE	RAMP & I-26 EXIT 104 EB ON RAMP
100000497	6545	2	0			
100000497	6545	3	0			
100000497	6545	4	0			
100000497	6545	5	0			
100000497	6545	6	0			
100000497	6545	7	0			
100000497	6545	8	0			
100000497	6545	9	0			
100000497	6545	10	0			
100000503	3325	1	0	RAMP	SE	RAMP
100000503	3325	2	0			
100000503	3325	3	0			
100000503	3325	4	0			
100000503	3325	5	0			
100000503	3325	6	0			
100000503	3325	7	0			
100000503	3325	8	0			
100000503	3325	9	0			
100000503	3325	10	0			
100000503	6472	1	0		E	RAMP
100000503	6472	2	0			
100000503	6472	3	0			

Node	Superlink	Run	Average Control Delay	Approach Street Name	Direction	Intersection
100000503	6472	4	0			
100000503	6472	5	0			
100000503	6472	6	0			
100000503	6472	7	0			
100000503	6472	8	0			
100000503	6472	9	0			
100000503	6472	10	0			
100000520	3345	1		EXIT 102 WB ON RAMP	N	EXIT 102 WB ON RAMP & I-26 EXIT 102 WB ON RAMP
100000520	3345	2				
100000520	3345	3				
100000520	3345	4				
100000520	3345	5				
100000520	3345	6				
100000520	3345	7				
100000520	3345	8				
100000520	3345	9				
100000520	3345	10				
100000520	3350	1	0	EXIT 102 WB ON RAMP	N	EXIT 102 WB ON RAMP & I-26 EXIT 102 WB ON RAMP
100000520	3350	2	0			
100000520	3350	3	0			
100000520	3350	4	0			
100000520	3350	5	0			
100000520	3350	6	0			
100000520	3350	7	0			
100000520	3350	8	0			
100000520	3350	9	0			
100000520	3350	10	0			
100000523	3355	1	0	ON-RAMP from WB	S	ON-RAMP from WB
100000523	3355	2	0			
100000523	3355	3	0			
100000523	3355	4	0			
100000523	3355	5	0			
100000523	3355	6	0			
100000523	3355	7	0			
100000523	3355	8	0			
100000523	3355	9	0			
100000523	3355	10	0			
100000523	3356	1	0	ON-RAMP from EB	S	ON-RAMP from WB
100000523	3356	2	0			
100000523	3356	3	0			
100000523	3356	4	0			
100000523	3356	5	0			
100000523	3356	6	0			
100000523	3356	7	0			
100000523	3356	8	0			
100000523	3356	9	0			
100000523	3356	10	0			
100000528	3360	1		EXIT 101 WB ON RAMP	N	EXIT 101 WB ON RAMP & I-26 EXIT 101 WB ON RAMP
100000528	3360	2				
100000528	3360	3				
100000528	3360	4				
100000528	3360	5				
100000528	3360	6				
100000528	3360	7				
100000528	3360	8				
100000528	3360	9				
100000528	3360	10				
100000528	3364	1	0	EXIT 101 WB ON RAMP	N	EXIT 101 WB ON RAMP & I-26 EXIT 101 WB ON RAMP
100000528	3364	2	0			
100000528	3364	3	0			
100000528	3364	4	0			
100000528	3364	5	0			
100000528	3364	6	0			
100000528	3364	7	0			
100000528	3364	8	0			
100000528	3364	9	0			
100000528	3364	10	0			
100000702	4338	1	0	RAMP	SW	RAMP & I-20 EXIT 65 WB ON RAMP
100000702	4338	2	0			
100000702	4338	3	0			
100000702	4338	4	0			
100000702	4338	5	0			
100000702	4338	6	0			
100000702	4338	7	0			
100000702	4338	8	0			
100000702	4338	9	0			
100000702	4338	10	0			
100000702	4343	1	0	RAMP	SW	RAMP & I-20 EXIT 65 WB ON RAMP
100000702	4343	2	0			
100000702	4343	3	0			
100000702	4343	4	0			
100000702	4343	5	0			
100000702	4343	6	0			
100000702	4343	7	0			
100000702	4343	8	0			
100000702	4343	9	0			
100000702	4343	10	0			
100000707	5166	1	0	MONTICELLO RD	NW	MONTICELLO RD
100000707	5166	2	0			
100000707	5166	3	0			
100000707	5166	4	0			
100000707	5166	5	0			
100000707	5166	6	0			
100000707	5166	7	0			
100000707	5166	8	0			
100000707	5166	9	0			
100000707	5166	10	0			
100000707	5168	1	0	SERVICE RD	W	MONTICELLO RD
100000707	5168	2	0			
100000707	5168	3	0			
100000707	5168	4	0			
100000707	5168	5	0			
100000707	5168	6	0			
100000707	5168	7	0			
100000707	5168	8	0			
100000707	5168	9	0			
100000707	5168	10	0			
100000707	5174	1	1.163946	MONTICELLO RD	SE	MONTICELLO RD
100000707	5174	2	1.232041			
100000707	5174	3	1.097124			

Node	Superlink	Run	Average Control Delay	Approach Street Name	Direction	Intersection
100000707	5174	4	1.002089			
100000707	5174	5	1.873764			
100000707	5174	6	1.23943			
100000707	5174	7	1.39572			
100000707	5174	8	1.350737			
100000707	5174	9	1.22239			
100000707	5174	10	0.85485			
100000709	4352	1	0	RAMP	S	RAMP & I-20 EXIT 68 WB ON RAMP
100000709	4352	2	0			
100000709	4352	3	0			
100000709	4352	4	0			
100000709	4352	5	0			
100000709	4352	6	0			
100000709	4352	7	0			
100000709	4352	8	0			
100000709	4352	9	0			
100000709	4352	10	0			
100000709	4353	1	0	RAMP	S	RAMP & I-20 EXIT 68 WB ON RAMP
100000709	4353	2	0			
100000709	4353	3	0			
100000709	4353	4	0			
100000709	4353	5	0			
100000709	4353	6	0			
100000709	4353	7	0			
100000709	4353	8	0			
100000709	4353	9	0			
100000709	4353	10	0			
100000710	4356	1	0	I-20 EXIT 68 WB OFF RAMP	W	I-20 EXIT 68 WB OFF RAMP & SERVICE RD
100000710	4356	2	0			
100000710	4356	3	0			
100000710	4356	4	0			
100000710	4356	5	0			
100000710	4356	6	0			
100000710	4356	7	0			
100000710	4356	8	0			
100000710	4356	9	0			
100000710	4356	10	0			
100000712	5157	1	0.134053	BUCKNER RD	NE	BUCKNER RD & RAMP
100000712	5157	2	0.064766			
100000712	5157	3	0.103171			
100000712	5157	4	0.074248			
100000712	5157	5	0.079093			
100000712	5157	6	0.057726			
100000712	5157	7	0.050169			
100000712	5157	8	0.067611			
100000712	5157	9	0.123508			
100000712	5157	10	0.085063			
100000712	5160	1	13.395175	BUCKNER RD	SW	BUCKNER RD & RAMP
100000712	5160	2	15.765728			
100000712	5160	3	14.111614			
100000712	5160	4	14.28103			
100000712	5160	5	14.038825			
100000712	5160	6	14.853781			
100000712	5160	7	12.669817			
100000712	5160	8	15.641402			
100000712	5160	9	14.271838			
100000712	5160	10	11.992286			
100000804	6261	1	31.013192	TRAM RD	SW	TRAM RD & SIDNEY RD
100000804	6261	2	32.364392			
100000804	6261	3	33.472252			
100000804	6261	4	32.612314			
100000804	6261	5	40.496507			
100000804	6261	6	19.213756			
100000804	6261	7	30.654807			
100000804	6261	8	30.179175			
100000804	6261	9	24.540628			
100000804	6261	10	25.823573			
100000804	6457	1	54.421917	SIDNEY RD	NW	TRAM RD & SIDNEY RD
100000804	6457	2	30.604073			
100000804	6457	3	41.151425			
100000804	6457	4	62.062935			
100000804	6457	5	37.037238			
100000804	6457	6	44.400883			
100000804	6457	7	92.014771			
100000804	6457	8	29.458414			
100000804	6457	9	59.672759			
100000804	6457	10	40.116813			
100000804	6458	1	2.737865	TRAM RD	NE	TRAM RD & SIDNEY RD
100000804	6458	2	3.371484			
100000804	6458	3	1.974012			
100000804	6458	4	2.711858			
100000804	6458	5	3.219316			
100000804	6458	6	2.738796			
100000804	6458	7	2.786191			
100000804	6458	8	2.512804			
100000804	6458	9	2.313209			
100000804	6458	10	2.31656			
100000882	5151	1		SERVICE RD	SW	SERVICE RD
100000882	5151	2				
100000882	5151	3				
100000882	5151	4				
100000882	5151	5				
100000882	5151	6				
100000882	5151	7				
100000882	5151	8				
100000882	5151	9				
100000882	5151	10				
100000882	6446	1	0	SERVICE RD	NE	SERVICE RD
100000882	6446	2	0			
100000882	6446	3	0			
100000882	6446	4	0			
100000882	6446	5	0			
100000882	6446	6	0			
100000882	6446	7	0			
100000882	6446	8	0			
100000882	6446	9	0			
100000882	6446	10	0			
100000882	6449	1	0		N	SERVICE RD
100000882	6449	2	0			
100000882	6449	3	0			

Node	Superlink	Run	Average Control Delay	Approach Street Name	Direction	Intersection
100000882	6449	4	0			
100000882	6449	5	0			
100000882	6449	6	0			
100000882	6449	7	0			
100000882	6449	8	0			
100000882	6449	9	0			
100000882	6449	10	0			
100000883	5148	1	0	BROAD RIVER RD	NW	BROAD RIVER RD & 6448 (E)
100000883	5148	2	0			
100000883	5148	3	0.000037			
100000883	5148	4	0			
100000883	5148	5	0.000038			
100000883	5148	6	0			
100000883	5148	7	0.000041			
100000883	5148	8	0.000033			
100000883	5148	9	0			
100000883	5148	10	0.000011			
100000883	6447	1	11.109737	BROAD RIVER RD	SE	BROAD RIVER RD & 6448 (E)
100000883	6447	2	12.040553			
100000883	6447	3	11.355133			
100000883	6447	4	12.464308			
100000883	6447	5	12.732409			
100000883	6447	6	11.535965			
100000883	6447	7	12.397039			
100000883	6447	8	12.116804			
100000883	6447	9	12.06642			
100000883	6447	10	11.571046			
100000883	6448	1			W	BROAD RIVER RD & 6448 (E)
100000883	6448	2				
100000883	6448	3				
100000883	6448	4				
100000883	6448	5				
100000883	6448	6				
100000883	6448	7				
100000883	6448	8				
100000883	6448	9				
100000883	6448	10				
100000895	3229	1	0	RAMP	SW	RAMP & PINEY GROVE RD
100000895	3229	2	0			
100000895	3229	3	0			
100000895	3229	4	0			
100000895	3229	5	0			
100000895	3229	6	0			
100000895	3229	7	0			
100000895	3229	8	0			
100000895	3229	9	0			
100000895	3229	10	0			
100000895	6543	1	8.194697	PINEY GROVE RD	E	RAMP & PINEY GROVE RD
100000895	6543	2	9.977323			
100000895	6543	3	12.991213			
100000895	6543	4	9.869127			
100000895	6543	5	9.196201			
100000895	6543	6	10.341116			
100000895	6543	7	8.466798			
100000895	6543	8	11.162529			
100000895	6543	9	10.824685			
100000895	6543	10	10.493882			
100000895	6544	1	0	PINEY GROVE RD	W	RAMP & PINEY GROVE RD
100000895	6544	2	0			
100000895	6544	3	0			
100000895	6544	4	0			
100000895	6544	5	0			
100000895	6544	6	0			
100000895	6544	7	0			
100000895	6544	8	0			
100000895	6544	9	0			
100000895	6544	10	0			
100000897	3243	1	4.100407	I-126 WB OFF RAMP TO COLONIAL LIFE BLVD	NE	I-126 WB OFF RAMP TO COLONIAL LIFE BLVD
100000897	3243	2	3.818715			
100000897	3243	3	2.881277			
100000897	3243	4	3.4765			
100000897	3243	5	4.597563			
100000897	3243	6	4.412966			
100000897	3243	7	3.028945			
100000897	3243	8	4.155148			
100000897	3243	9	3.865384			
100000897	3243	10	4.385904			
100000897	5134	1	7.108632	W COLONIAL LIFE BLVD	NW	I-126 WB OFF RAMP TO COLONIAL LIFE BLVD
100000897	5134	2	7.035072			
100000897	5134	3	7.090554			
100000897	5134	4	7.074551			
100000897	5134	5	6.72844			
100000897	5134	6	7.18897			
100000897	5134	7	7.125249			
100000897	5134	8	6.743179			
100000897	5134	9	7.295388			
100000897	5134	10	7.055072			
100000897	6471	1	0.237871	COLONIAL LIFE BLVD W	S	I-126 WB OFF RAMP TO COLONIAL LIFE BLVD
100000897	6471	2	0.264588			
100000897	6471	3	0.18169			
100000897	6471	4	0.200383			
100000897	6471	5	0.304368			
100000897	6471	6	0.180324			
100000897	6471	7	0.184982			
100000897	6471	8	0.167301			
100000897	6471	9	0.246866			
100000897	6471	10	0.270477			
100000898	51	1	37.54792	I-26 EXIT 108 EB OFF RAMP	S	I-26 EXIT 108 EB OFF RAMP
100000898	51	2	37.589515			
100000898	51	3	42.690771			
100000898	51	4	39.074949			
100000898	51	5	39.974967			
100000898	51	6	35.276562			
100000898	51	7	33.887101			
100000898	51	8	37.809933			
100000898	51	9	37.538563			
100000898	51	10	41.102748			
100000898	5130	1	17.585073	BUSH RIVER RD	N	I-26 EXIT 108 EB OFF RAMP
100000898	5130	2	20.459476			
100000898	5130	3	24.279322			

Node	Superlink	Run	Average Control Delay	Approach Street Name	Direction	Intersection
100000898	5130	4	22.52981			
100000898	5130	5	23.715178			
100000898	5130	6	17.249469			
100000898	5130	7	22.060194			
100000898	5130	8	20.125451			
100000898	5130	9	19.81836			
100000898	5130	10	25.796124			
100000898	5131	1	6.334014	BUSH RIVER RD	E	I-26 EXIT 108 EB OFF RAMP
100000898	5131	2	6.984529			
100000898	5131	3	6.919838			
100000898	5131	4	6.386741			
100000898	5131	5	6.264932			
100000898	5131	6	6.701062			
100000898	5131	7	6.033115			
100000898	5131	8	7.374689			
100000898	5131	9	6.993558			
100000898	5131	10	8.306148			
100000898	6503	1	8.64233	BUSH RIVER RD	W	I-26 EXIT 108 EB OFF RAMP
100000898	6503	2	7.74555			
100000898	6503	3	7.840986			
100000898	6503	4	7.403248			
100000898	6503	5	7.365953			
100000898	6503	6	6.740699			
100000898	6503	7	7.554059			
100000898	6503	8	9.022455			
100000898	6503	9	9.084143			
100000898	6503	10	7.48			
100000899	3298	1	10.662477	EXIT 106 WB OFF RAMP	SE	EXIT 106 WB OFF RAMP & BURNING TREE RD
100000899	3298	2	11.485313			
100000899	3298	3	11.239133			
100000899	3298	4	11.260455			
100000899	3298	5	11.784281			
100000899	3298	6	16.890928			
100000899	3298	7	11.784834			
100000899	3298	8	9.906085			
100000899	3298	9	10.167971			
100000899	3298	10	10.868224			
100000899	6105	1	0	BURNING TREE RD	S	EXIT 106 WB OFF RAMP & BURNING TREE RD
100000899	6105	2	0			
100000899	6105	3	0			
100000899	6105	4	0			
100000899	6105	5	0			
100000899	6105	6	0			
100000899	6105	7	0			
100000899	6105	8	0			
100000899	6105	9	0			
100000899	6105	10	0			
100000899	6106	1	0	BURNING TREE RD	N	EXIT 106 WB OFF RAMP & BURNING TREE RD
100000899	6106	2	0			
100000899	6106	3	0			
100000899	6106	4	0			
100000899	6106	5	0			
100000899	6106	6	0			
100000899	6106	7	0			
100000899	6106	8	0			
100000899	6106	9	0			
100000899	6106	10	0			
100000902	4292	1	43.321019	EXIT 110 WB OFF RAMP	NE	SUNSET BLVD
100000902	4292	2	54.17399			
100000902	4292	3	44.018782			
100000902	4292	4	48.283349			
100000902	4292	5	44.311356			
100000902	4292	6	46.514924			
100000902	4292	7	32.290251			
100000902	4292	8	47.567694			
100000902	4292	9	35.87249			
100000902	4292	10	48.626009			
100000902	4947	1	7.927476	SUNSET BLVD	W	SUNSET BLVD
100000902	4947	2	6.707189			
100000902	4947	3	8.477836			
100000902	4947	4	8.265959			
100000902	4947	5	10.234051			
100000902	4947	6	7.020473			
100000902	4947	7	9.452621			
100000902	4947	8	7.852925			
100000902	4947	9	7.650966			
100000902	4947	10	6.932455			
100000902	4951	1	0.00008	SUNSET BLVD	E	SUNSET BLVD
100000902	4951	2	0			
100000902	4951	3	0			
100000902	4951	4	0			
100000902	4951	5	0.001159			
100000902	4951	6	0			
100000902	4951	7	0			
100000902	4951	8	0			
100000902	4951	9	0			
100000902	4951	10	0			
100000903	4289	1	48.580537	EXIT 110 WB OFF RAMP	NW	RAMP
100000903	4289	2	50.572668			
100000903	4289	3	44.661919			
100000903	4289	4	43.5498			
100000903	4289	5	47.341746			
100000903	4289	6	45.897413			
100000903	4289	7	46.543536			
100000903	4289	8	52.188938			
100000903	4289	9	48.831987			
100000903	4289	10	45.012091			
100000903	4298	1	30.623841	RAMP	SE	RAMP
100000903	4298	2	31.706251			
100000903	4298	3	31.137109			
100000903	4298	4	30.817234			
100000903	4298	5	28.510595			
100000903	4298	6	30.086124			
100000903	4298	7	31.851424			
100000903	4298	8	33.57095			
100000903	4298	9	30.833512			
100000903	4298	10	26.875719			
100000903	4950	1	13.085387	SUNSET BLVD	E	RAMP
100000903	4950	2	13.45324			
100000903	4950	3	14.049865			

Node	Superlink	Run	Average Control Delay	Approach Street Name	Direction	Intersection
100000903	4950	4	13.383428			
100000903	4950	5	13.106222			
100000903	4950	6	14.177222			
100000903	4950	7	13.212219			
100000903	4950	8	13.582734			
100000903	4950	9	13.30631			
100000903	4950	10	12.784867			
100000903	4951	1	27.768207	SUNSET BLVD	W	RAMP
100000903	4951	2	26.851207			
100000903	4951	3	30.738583			
100000903	4951	4	31.023441			
100000903	4951	5	28.544542			
100000903	4951	6	28.082785			
100000903	4951	7	26.913237			
100000903	4951	8	27.946153			
100000903	4951	9	26.574955			
100000903	4951	10	27.475203			

2040 No-Build PM

Node	Superlink	Run	Average Control Delay	Approach Street Name	Direction	Intersection
4	5081	1	4.03292	BROAD RIVER RD	W	WESTERN LN & BROAD RIVER RD
4	5081	2	2.771076			
4	5081	3	3.479059			
4	5081	4	3.234602			
4	5081	5	3.79484			
4	5081	6	3.176103			
4	5081	7	3.828813			
4	5081	8	2.951692			
4	5081	9	4.106496			
4	5081	10	3.459221			
4	6465	1	6.790249	WESTERN LN	S	WESTERN LN & BROAD RIVER RD
4	6465	2	7.30403			
4	6465	3	7.334274			
4	6465	4	7.081422			
4	6465	5	7.427878			
4	6465	6	7.6837			
4	6465	7	6.981241			
4	6465	8	7.550631			
4	6465	9	6.832073			
4	6465	10	7.448296			
4	6466	1	4.544879	BROAD RIVER RD	E	WESTERN LN & BROAD RIVER RD
4	6466	2	5.073054			
4	6466	3	4.755054			
4	6466	4	4.691728			
4	6466	5	4.83022			
4	6466	6	5.217668			
4	6466	7	5.106569			
4	6466	8	4.886524			
4	6466	9	4.818535			
4	6466	10	5.009999			
4	6467	1	4.774753	WESTERN LN	N	WESTERN LN & BROAD RIVER RD
4	6467	2	6.653231			
4	6467	3	5.938708			
4	6467	4	6.222529			
4	6467	5	6.11275			
4	6467	6	5.627165			
4	6467	7	6.50984			
4	6467	8	6.574768			
4	6467	9	5.664405			
4	6467	10	5.628894			
11	5487	1	0	MORNINGHILL DR	N	MORNINGHILL DR & BURNETTE DR
11	5487	2	0			
11	5487	3	0			
11	5487	4	0			
11	5487	5	0			
11	5487	6	0			
11	5487	7	0			
11	5487	8	0			
11	5487	9	0			
11	5487	10	0			
11	6536	1		MORNINGHILL DR	S	MORNINGHILL DR & BURNETTE DR
11	6536	2				
11	6536	3				
11	6536	4				
11	6536	5				
11	6536	6				
11	6536	7				
11	6536	8				
11	6536	9				
11	6536	10				
11	6537	1	0	BURNETTE DR	E	MORNINGHILL DR & BURNETTE DR
11	6537	2	0			
11	6537	3	0			
11	6537	4	0			
11	6537	5	0			
11	6537	6	0			
11	6537	7	0			
11	6537	8	0			
11	6537	9	0			
11	6537	10	0			
26	5488	1	0	RAMP	S	RAMP & 6502 (NW)
26	5488	2	0			
26	5488	3	0			
26	5488	4	0			
26	5488	5	0			
26	5488	6	0			
26	5488	7	0			
26	5488	8	0			
26	5488	9	0			
26	5488	10	0			
26	6501	1	11.295062	RAMP	N	RAMP & 6502 (NW)
26	6501	2	10.430841			
26	6501	3	11.337951			
26	6501	4	10.485949			
26	6501	5	10.285184			
26	6501	6	10.60916			
26	6501	7	10.612593			
26	6501	8	10.024493			
26	6501	9	9.886985			
26	6501	10	10.440074			
26	6502	1	0		SE	RAMP & 6502 (NW)
26	6502	2	0			
26	6502	3	0			
26	6502	4	0			

Node	Superlink	Run	Average Control Delay	Approach Street Name	Direction	Intersection
26	6502	5	0			
26	6502	6	0			
26	6502	7	0			
26	6502	8	0			
26	6502	9	0			
26	6502	10	0			
28	5140	1	0	GREYSTONE BLVD	S	GREYSTONE BLVD & CANDI LN
28	5140	2	0			
28	5140	3	0			
28	5140	4	0			
28	5140	5	0			
28	5140	6	0			
28	5140	7	0			
28	5140	8	0			
28	5140	9	0			
28	5140	10	0			
28	6506	1	6.862642	GREYSTONE BLVD	W	GREYSTONE BLVD & CANDI LN
28	6506	2	7.181487			
28	6506	3	7.320944			
28	6506	4	7.331144			
28	6506	5	7.905393			
28	6506	6	7.622012			
28	6506	7	6.951005			
28	6506	8	7.610463			
28	6506	9	7.611977			
28	6506	10	7.104365			
28	6507	1		CANDI LN	E	GREYSTONE BLVD & CANDI LN
28	6507	2				
28	6507	3				
28	6507	4				
28	6507	5				
28	6507	6				
28	6507	7				
28	6507	8				
28	6507	9				
28	6507	10				
41	6518	1	567.692894	BROAD RIVER RD	NW	DUTCH SQUARE BLVD & BROAD RIVER RD
41	6518	2	264.520728			
41	6518	3	306.6112			
41	6518	4	323.565382			
41	6518	5	245.40281			
41	6518	6	315.344152			
41	6518	7	184.392885			
41	6518	8	295.096196			
41	6518	9	513.84976			
41	6518	10	264.74315			
41	6519	1	78.862659	DUTCH SQUARE BLVD	E	DUTCH SQUARE BLVD & BROAD RIVER RD
41	6519	2	61.242107			
41	6519	3	55.006163			
41	6519	4	70.880645			
41	6519	5	59.519356			
41	6519	6	64.451579			
41	6519	7	47.776399			
41	6519	8	60.024378			
41	6519	9	95.005888			
41	6519	10	56.178724			
41	6521	1	4.651143	BROAD RIVER RD	SE	DUTCH SQUARE BLVD & BROAD RIVER RD
41	6521	2	4.038664			
41	6521	3	4.570866			
41	6521	4	3.712165			
41	6521	5	4.61206			
41	6521	6	3.913735			
41	6521	7	4.813695			
41	6521	8	4.99483			
41	6521	9	3.631592			
41	6521	10	4.434179			
43	6519	1	0	DUTCH SQUARE BLVD	W	DUTCH SQUARE BLVD & 6522 (N)
43	6519	2	0			
43	6519	3	0			
43	6519	4	0			
43	6519	5	0			
43	6519	6	0			
43	6519	7	0			
43	6519	8	0			
43	6519	9	0			
43	6519	10	0			
43	6520	1	434.375586	DUTCH SQUARE BLVD	E	DUTCH SQUARE BLVD & 6522 (N)
43	6520	2	278.283053			
43	6520	3	275.665896			
43	6520	4	312.015173			
43	6520	5	278.188507			
43	6520	6	259.78656			
43	6520	7	236.059525			
43	6520	8	279.672085			
43	6520	9	521.421528			
43	6520	10	249.860382			
43	6522	1	0		SW	DUTCH SQUARE BLVD & 6522 (N)
43	6522	2	0			
43	6522	3	0			
43	6522	4	0			
43	6522	5	0			
43	6522	6	0			
43	6522	7	0			
43	6522	8	0			
43	6522	9	0			
43	6522	10	0			
46	6273	1	0	PARKRIDGE DR	NE	PARKRIDGE DR & 6555 (NE)
46	6273	2	0			
46	6273	3	0			
46	6273	4	0			
46	6273	5	0			
46	6273	6	0			
46	6273	7	0			
46	6273	8	0			
46	6273	9	0			
46	6273	10	0			
46	6555	1			SW	PARKRIDGE DR & 6555 (NE)
46	6555	2				
46	6555	3				

Node	Superlink	Run	Average Control Delay	Approach Street Name	Direction	Intersection
46	6555	4				
46	6555	5				
46	6555	6				
46	6555	7				
46	6555	8				
46	6555	9				
46	6555	10				
46	6556	1	8.085512	PARKRIDGE DR	SE	PARKRIDGE DR & 6555 (NE)
46	6556	2	9.320418			
46	6556	3	7.815856			
46	6556	4	7.673263			
46	6556	5	7.486728			
46	6556	6	9.422421			
46	6556	7	7.652679			
46	6556	8	7.444278			
46	6556	9	7.249513			
46	6556	10	9.014777			
100000012	5081	1	30.638471	BROAD RIVER RD	SE	KINLEY RD
100000012	5081	2	26.007601			
100000012	5081	3	32.22489			
100000012	5081	4	31.034779			
100000012	5081	5	26.915698			
100000012	5081	6	24.923386			
100000012	5081	7	27.076866			
100000012	5081	8	27.590147			
100000012	5081	9	28.179523			
100000012	5081	10	25.994772			
100000012	6276	1	51.340718	KINLEY RD	N	KINLEY RD
100000012	6276	2	40.622856			
100000012	6276	3	44.413982			
100000012	6276	4	47.207887			
100000012	6276	5	47.203257			
100000012	6276	6	48.697459			
100000012	6276	7	38.783247			
100000012	6276	8	53.847937			
100000012	6276	9	46.996125			
100000012	6276	10	40.990044			
100000012	6307	1	276.576062	KENNERLY RD	S	KINLEY RD
100000012	6307	2	258.761843			
100000012	6307	3	388.476602			
100000012	6307	4	271.987399			
100000012	6307	5	314.272096			
100000012	6307	6	369.288859			
100000012	6307	7	257.800847			
100000012	6307	8	264.176347			
100000012	6307	9	266.144555			
100000012	6307	10	415.951764			
100000012	6308	1	128.689432	BROAD RIVER RD	NW	KINLEY RD
100000012	6308	2	153.960896			
100000012	6308	3	172.942383			
100000012	6308	4	131.154672			
100000012	6308	5	156.915061			
100000012	6308	6	191.402751			
100000012	6308	7	150.038447			
100000012	6308	8	133.845215			
100000012	6308	9	199.196931			
100000012	6308	10	159.665614			
100000025	6267	1	0	PARKRIDGE DR	NW	CLUB RD & PARKRIDGE DR
100000025	6267	2	0			
100000025	6267	3	0			
100000025	6267	4	0			
100000025	6267	5	0			
100000025	6267	6	0			
100000025	6267	7	0			
100000025	6267	8	0			
100000025	6267	9	0			
100000025	6267	10	0			
100000025	6273	1	0	PARKRIDGE DR	SE	CLUB RD & PARKRIDGE DR
100000025	6273	2	0			
100000025	6273	3	0			
100000025	6273	4	0			
100000025	6273	5	0			
100000025	6273	6	0			
100000025	6273	7	0			
100000025	6273	8	0			
100000025	6273	9	0			
100000025	6273	10	0			
100000025	6304	1		CLUB RD	S	CLUB RD & PARKRIDGE DR
100000025	6304	2				
100000025	6304	3				
100000025	6304	4				
100000025	6304	5				
100000025	6304	6				
100000025	6304	7				
100000025	6304	8				
100000025	6304	9				
100000025	6304	10				
100000037	5101	1	34.325094	HARBISON BLVD	NE	BROAD RIVER RD & HARBISON BLVD
100000037	5101	2	30.636909			
100000037	5101	3	27.904632			
100000037	5101	4	26.476778			
100000037	5101	5	36.854877			
100000037	5101	6	26.811047			
100000037	5101	7	29.823868			
100000037	5101	8	25.390753			
100000037	5101	9	32.235658			
100000037	5101	10	69.455912			
100000037	6317	1	13.598121	BROAD RIVER RD	SE	BROAD RIVER RD & HARBISON BLVD
100000037	6317	2	12.445658			
100000037	6317	3	14.257806			
100000037	6317	4	13.441622			
100000037	6317	5	10.754325			
100000037	6317	6	12.492655			
100000037	6317	7	11.637761			
100000037	6317	8	14.093303			
100000037	6317	9	13.892083			
100000037	6317	10	13.07806			
100000037	6320	1	62.377568	BROAD RIVER RD	NW	BROAD RIVER RD & HARBISON BLVD
100000037	6320	2	81.388975			
100000037	6320	3	53.139344			

Node	Superlink	Run	Average Control Delay	Approach Street Name	Direction	Intersection
100000037	6320	4	89.816351			
100000037	6320	5	59.670936			
100000037	6320	6	116.640559			
100000037	6320	7	102.500768			
100000037	6320	8	54.755334			
100000037	6320	9	58.368778			
100000037	6320	10	118.067714			
100000038	6232	1	0	BROAD RIVER RD	NW	BROAD RIVER RD & 6311 (S)
100000038	6232	2	0			
100000038	6232	3	0			
100000038	6232	4	0			
100000038	6232	5	0			
100000038	6232	6	0			
100000038	6232	7	0			
100000038	6232	8	0			
100000038	6232	9	0			
100000038	6232	10	0			
100000038	6311	1	11.398058		N	BROAD RIVER RD & 6311 (S)
100000038	6311	2	14.14458			
100000038	6311	3	14.045883			
100000038	6311	4	6.511795			
100000038	6311	5	11.897187			
100000038	6311	6	12.619259			
100000038	6311	7	4.886374			
100000038	6311	8	5.951323			
100000038	6311	9	18.488656			
100000038	6311	10	12.698183			
100000038	6312	1	0.0001	BROAD RIVER RD	SE	BROAD RIVER RD & 6311 (S)
100000038	6312	2	0.003678			
100000038	6312	3	0			
100000038	6312	4	0			
100000038	6312	5	0.00053			
100000038	6312	6	0			
100000038	6312	7	0			
100000038	6312	8	0			
100000038	6312	9	0			
100000038	6312	10	0.014197			
100000041	6281	1	10.215478	LAKE MURRAY BLVD	W	LAKE MURRAY BLVD & 6311 (N)
100000041	6281	2	8.409977			
100000041	6281	3	0.003436			
100000041	6281	4	4.951042			
100000041	6281	5	7.76594			
100000041	6281	6	11.033371			
100000041	6281	7	0.061642			
100000041	6281	8	0			
100000041	6281	9	10.764258			
100000041	6281	10	25.58041			
100000041	6311	1			SW	LAKE MURRAY BLVD & 6311 (N)
100000041	6311	2				
100000041	6311	3				
100000041	6311	4				
100000041	6311	5				
100000041	6311	6				
100000041	6311	7				
100000041	6311	8				
100000041	6311	9				
100000041	6311	10				
100000041	6313	1	0.140183	LAKE MURRAY BLVD	E	LAKE MURRAY BLVD & 6311 (N)
100000041	6313	2	1.329804			
100000041	6313	3	0.288384			
100000041	6313	4	0.119447			
100000041	6313	5	0.13948			
100000041	6313	6	0.04913			
100000041	6313	7	0.057814			
100000041	6313	8	0.203834			
100000041	6313	9	0.139495			
100000041	6313	10	0.529734			
100000046	5511	1	225.87948	BUSH RIVER RD	E	BUSH RIVER RD
100000046	5511	2	141.580912			
100000046	5511	3	159.361754			
100000046	5511	4	171.376328			
100000046	5511	5	154.445079			
100000046	5511	6	101.644846			
100000046	5511	7	77.886941			
100000046	5511	8	246.592305			
100000046	5511	9	197.644128			
100000046	5511	10	152.449466			
100000046	6323	1	427.296252	BROAD RIVER RD	NW	BUSH RIVER RD
100000046	6323	2	165.191376			
100000046	6323	3	253.402057			
100000046	6323	4	214.452951			
100000046	6323	5	174.547641			
100000046	6323	6	210.640824			
100000046	6323	7	117.39282			
100000046	6323	8	246.381188			
100000046	6323	9	342.923196			
100000046	6323	10	225.220661			
100000046	6324	1	63.566151	ELM ABODE TER	SW	BUSH RIVER RD
100000046	6324	2	99.399798			
100000046	6324	3	71.498556			
100000046	6324	4	67.609626			
100000046	6324	5	96.226244			
100000046	6324	6	151.302826			
100000046	6324	7	90.634858			
100000046	6324	8	94.348863			
100000046	6324	9	73.112941			
100000046	6324	10	100.056892			
100000046	6518	1	41.510462	BROAD RIVER RD	SE	BUSH RIVER RD
100000046	6518	2	40.85458			
100000046	6518	3	37.655967			
100000046	6518	4	36.371798			
100000046	6518	5	44.723347			
100000046	6518	6	35.345163			
100000046	6518	7	49.76167			
100000046	6518	8	39.044669			
100000046	6518	9	33.462241			
100000046	6518	10	56.988742			
100000049	6318	1	38.944427	LOST CREEK DR	S	LOST CREEK DR
100000049	6318	2	60.734309			
100000049	6318	3	39.899332			

Node	Superlink	Run	Average Control Delay	Approach Street Name	Direction	Intersection
100000049	6318	4	43.637749			
100000049	6318	5	41.17363			
100000049	6318	6	64.736703			
100000049	6318	7	51.582862			
100000049	6318	8	45.211287			
100000049	6318	9	42.622106			
100000049	6318	10	68.978621			
100000049	6319	1	50.499513	PINEY WOODS RD	N	LOST CREEK DR
100000049	6319	2	41.000272			
100000049	6319	3	41.005171			
100000049	6319	4	63.002254			
100000049	6319	5	36.885359			
100000049	6319	6	91.750974			
100000049	6319	7	78.844517			
100000049	6319	8	72.72266			
100000049	6319	9	29.743468			
100000049	6319	10	105.352166			
100000049	6320	1	14.697044	BROAD RIVER RD	SE	LOST CREEK DR
100000049	6320	2	22.474486			
100000049	6320	3	16.193894			
100000049	6320	4	16.637586			
100000049	6320	5	23.933433			
100000049	6320	6	20.018199			
100000049	6320	7	15.17666			
100000049	6320	8	12.175314			
100000049	6320	9	21.871124			
100000049	6320	10	17.575146			
100000049	6322	1	42.994761	BROAD RIVER RD	NW	LOST CREEK DR
100000049	6322	2	48.655311			
100000049	6322	3	24.476658			
100000049	6322	4	40.496534			
100000049	6322	5	32.912509			
100000049	6322	6	107.321616			
100000049	6322	7	76.50987			
100000049	6322	8	34.74958			
100000049	6322	9	26.457882			
100000049	6322	10	49.840165			
100000068	6321	1	19.946724	PINEY GROVE RD	E	BROAD RIVER RD & PINEY GROVE RD
100000068	6321	2	21.051774			
100000068	6321	3	19.094564			
100000068	6321	4	15.857749			
100000068	6321	5	17.485923			
100000068	6321	6	19.085131			
100000068	6321	7	18.848368			
100000068	6321	8	18.044091			
100000068	6321	9	17.140106			
100000068	6321	10	18.530277			
100000068	6322	1	2.609763	BROAD RIVER RD	SE	BROAD RIVER RD & PINEY GROVE RD
100000068	6322	2	1.875065			
100000068	6322	3	2.596718			
100000068	6322	4	2.156884			
100000068	6322	5	1.518193			
100000068	6322	6	2.476729			
100000068	6322	7	2.280812			
100000068	6322	8	1.965415			
100000068	6322	9	2.21218			
100000068	6322	10	2.296214			
100000068	6357	1	3.326539	BROAD RIVER RD	NW	BROAD RIVER RD & PINEY GROVE RD
100000068	6357	2	3.650553			
100000068	6357	3	3.087731			
100000068	6357	4	3.810355			
100000068	6357	5	3.482593			
100000068	6357	6	3.205509			
100000068	6357	7	3.398992			
100000068	6357	8	3.478349			
100000068	6357	9	2.945085			
100000068	6357	10	4.271091			
100000085	6325	1	0.015173	BROAD RIVER RD	E	BROAD RIVER RD
100000085	6325	2	0.113489			
100000085	6325	3	0.122833			
100000085	6325	4	0.120232			
100000085	6325	5	0.074774			
100000085	6325	6	0.165166			
100000085	6325	7	0.132364			
100000085	6325	8	0.076281			
100000085	6325	9	0.07532			
100000085	6325	10	0.056598			
100000085	6329	1	2.428896	RT	E	BROAD RIVER RD
100000085	6329	2	3.751887			
100000085	6329	3	3.430881			
100000085	6329	4	2.262377			
100000085	6329	5	2.559118			
100000085	6329	6	3.159708			
100000085	6329	7	2.442308			
100000085	6329	8	3.068289			
100000085	6329	9	2.233637			
100000085	6329	10	3.036677			
100000085	6330	1	198.647461	BROAD RIVER RD	W	BROAD RIVER RD
100000085	6330	2	49.721242			
100000085	6330	3	72.69873			
100000085	6330	4	81.886082			
100000085	6330	5	99.278322			
100000085	6330	6	138.945173			
100000085	6330	7	15.171711			
100000085	6330	8	85.271075			
100000085	6330	9	246.323963			
100000085	6330	10	68.878993			
100000085	6331	1	93.740181	RIVERHILL CIR	W	BROAD RIVER RD
100000085	6331	2	27.482924			
100000085	6331	3	48.757193			
100000085	6331	4	76.408072			
100000085	6331	5	109.765969			
100000085	6331	6	74.96018			
100000085	6331	7	36.073082			
100000085	6331	8	92.580841			
100000085	6331	9	163.435766			
100000085	6331	10	77.340481			
100000093	4299	1	102.946498	RAMP	SW	SUNSET BLVD & RAMP
100000093	4299	2	116.813733			
100000093	4299	3	90.633227			

Node	Superlink	Run	Average Control Delay	Approach Street Name	Direction	Intersection
100000093	4299	4	104.694276			
100000093	4299	5	89.544568			
100000093	4299	6	93.752596			
100000093	4299	7	102.711475			
100000093	4299	8	118.537637			
100000093	4299	9	91.561694			
100000093	4299	10	98.174609			
100000093	4949	1	39.291373	SUNSET BLVD	E	SUNSET BLVD & RAMP
100000093	4949	2	37.241322			
100000093	4949	3	38.410735			
100000093	4949	4	34.609172			
100000093	4949	5	36.065947			
100000093	4949	6	37.077199			
100000093	4949	7	28.797233			
100000093	4949	8	37.801435			
100000093	4949	9	35.196044			
100000093	4949	10	35.704587			
100000093	4950	1	0.002011	SUNSET BLVD	W	SUNSET BLVD & RAMP
100000093	4950	2	0.109279			
100000093	4950	3	0.02711			
100000093	4950	4	0.001816			
100000093	4950	5	0.118611			
100000093	4950	6	0.001724			
100000093	4950	7	0.001437			
100000093	4950	8	0.003007			
100000093	4950	9	0.003547			
100000093	4950	10	0.001606			
100000120	5031	1	9.656612	SUNSET BLVD	W	CORLEY MILL RD
100000120	5031	2	9.8434			
100000120	5031	3	10.329943			
100000120	5031	4	11.052415			
100000120	5031	5	9.775798			
100000120	5031	6	10.39201			
100000120	5031	7	9.870526			
100000120	5031	8	10.936853			
100000120	5031	9	10.134362			
100000120	5031	10	10.803347			
100000120	5352	1	12.846092	CORLEY MILL RD	S	CORLEY MILL RD
100000120	5352	2	12.555755			
100000120	5352	3	12.355272			
100000120	5352	4	13.179689			
100000120	5352	5	14.062249			
100000120	5352	6	12.728364			
100000120	5352	7	13.208632			
100000120	5352	8	12.6087			
100000120	5352	9	13.142488			
100000120	5352	10	13.147998			
100000120	5353	1	40.226498	GINNY LN	N	CORLEY MILL RD
100000120	5353	2	37.552378			
100000120	5353	3	41.09406			
100000120	5353	4	37.37798			
100000120	5353	5	39.060203			
100000120	5353	6	41.18394			
100000120	5353	7	35.509534			
100000120	5353	8	34.694662			
100000120	5353	9	39.737213			
100000120	5353	10	32.726251			
100000120	5355	1	35.145542	SUNSET BLVD	E	CORLEY MILL RD
100000120	5355	2	33.780824			
100000120	5355	3	35.125107			
100000120	5355	4	36.153474			
100000120	5355	5	35.150937			
100000120	5355	6	33.508513			
100000120	5355	7	34.788834			
100000120	5355	8	33.94972			
100000120	5355	9	36.360918			
100000120	5355	10	36.105586			
100000134	2048	1	21.908706	RAMP	SW	SUNSET BLVD & RAMP
100000134	2048	2	21.29452			
100000134	2048	3	21.638698			
100000134	2048	4	23.340969			
100000134	2048	5	25.286355			
100000134	2048	6	25.809617			
100000134	2048	7	22.485158			
100000134	2048	8	25.52814			
100000134	2048	9	23.084246			
100000134	2048	10	23.760247			
100000134	5027	1	6.76407	SUNSET BLVD	NW	SUNSET BLVD & RAMP
100000134	5027	2	7.307469			
100000134	5027	3	9.855137			
100000134	5027	4	7.875402			
100000134	5027	5	7.565876			
100000134	5027	6	8.752315			
100000134	5027	7	9.715011			
100000134	5027	8	6.409112			
100000134	5027	9	8.332848			
100000134	5027	10	6.294767			
100000134	5030	1	4.478785	SUNSET BLVD	SE	SUNSET BLVD & RAMP
100000134	5030	2	5.154556			
100000134	5030	3	5.406916			
100000134	5030	4	4.359593			
100000134	5030	5	4.248115			
100000134	5030	6	3.5769			
100000134	5030	7	4.211412			
100000134	5030	8	4.205137			
100000134	5030	9	4.441875			
100000134	5030	10	4.942451			
100000135	2039	1	11.984489	I-20 EB OFF-RAMP	NE	SUNSET BLVD & I-20 EB OFF-RAMP
100000135	2039	2	11.448427			
100000135	2039	3	13.12213			
100000135	2039	4	12.118332			
100000135	2039	5	13.367953			
100000135	2039	6	11.799661			
100000135	2039	7	13.009353			
100000135	2039	8	12.467007			
100000135	2039	9	12.865949			
100000135	2039	10	12.657485			
100000135	5022	1	4.394052	SUNSET BLVD	SE	SUNSET BLVD & I-20 EB OFF-RAMP
100000135	5022	2	5.096383			
100000135	5022	3	4.287881			

Node	Superlink	Run	Average Control Delay	Approach Street Name	Direction	Intersection
100000135	5022	4	4.837344			
100000135	5022	5	4.962115			
100000135	5022	6	5.12956			
100000135	5022	7	4.040287			
100000135	5022	8	4.920556			
100000135	5022	9	4.810424			
100000135	5022	10	5.071547			
100000135	5023	1	4.063535	SUNSET BLVD	NW	SUNSET BLVD & I-20 EB OFF-RAMP
100000135	5023	2	5.161759			
100000135	5023	3	5.090181			
100000135	5023	4	4.700486			
100000135	5023	5	4.99009			
100000135	5023	6	4.801347			
100000135	5023	7	4.634928			
100000135	5023	8	5.198196			
100000135	5023	9	5.156			
100000135	5023	10	4.724458			
100000136	5021	1	22.291809	SUNSET BLVD	SE	SUNSET BLVD
100000136	5021	2	21.143555			
100000136	5021	3	20.866801			
100000136	5021	4	19.903833			
100000136	5021	5	22.655615			
100000136	5021	6	22.319201			
100000136	5021	7	19.554193			
100000136	5021	8	21.551716			
100000136	5021	9	20.388432			
100000136	5021	10	23.761498			
100000136	5362	1	31.847947	CROMER RD	NE	SUNSET BLVD
100000136	5362	2	30.146767			
100000136	5362	3	27.881762			
100000136	5362	4	32.34292			
100000136	5362	5	28.767976			
100000136	5362	6	32.10819			
100000136	5362	7	30.037359			
100000136	5362	8	30.267221			
100000136	5362	9	33.045075			
100000136	5362	10	28.211065			
100000136	5364	1	104.924773	SUNSET BLVD	NW	SUNSET BLVD
100000136	5364	2	100.877353			
100000136	5364	3	95.02916			
100000136	5364	4	97.724325			
100000136	5364	5	99.295821			
100000136	5364	6	93.766145			
100000136	5364	7	92.230623			
100000136	5364	8	97.972375			
100000136	5364	9	96.412401			
100000136	5364	10	98.010546			
100000136	6459	1	24.230852	DAVEGA DR	SW	SUNSET BLVD
100000136	6459	2	26.143418			
100000136	6459	3	21.738398			
100000136	6459	4	26.422171			
100000136	6459	5	25.014303			
100000136	6459	6	26.351468			
100000136	6459	7	24.173889			
100000136	6459	8	27.391284			
100000136	6459	9	26.065379			
100000136	6459	10	27.330368			
100000138	2052	1	0	RAMP	NW	RAMP
100000138	2052	2	0			
100000138	2052	3	0			
100000138	2052	4	0			
100000138	2052	5	0			
100000138	2052	6	0			
100000138	2052	7	0			
100000138	2052	8	0			
100000138	2052	9	0			
100000138	2052	10	0			
100000138	5030	1	0	SUNSET BLVD	NW	RAMP
100000138	5030	2	0			
100000138	5030	3	0			
100000138	5030	4	0			
100000138	5030	5	0			
100000138	5030	6	0			
100000138	5030	7	0			
100000138	5030	8	0			
100000138	5030	9	0			
100000138	5030	10	0			
100000138	6553	1	6.33645	SUNSET BLVD	SE	RAMP
100000138	6553	2	6.811019			
100000138	6553	3	5.399312			
100000138	6553	4	6.622974			
100000138	6553	5	6.55766			
100000138	6553	6	4.87554			
100000138	6553	7	5.571562			
100000138	6553	8	6.197625			
100000138	6553	9	6.633268			
100000138	6553	10	6.935366			
100000139	2065	1	24.242404	RAMP	S	RAMP & BUSH RIVER RD
100000139	2065	2	22.8364			
100000139	2065	3	25.655532			
100000139	2065	4	25.519768			
100000139	2065	5	23.752085			
100000139	2065	6	26.475157			
100000139	2065	7	23.41918			
100000139	2065	8	26.356764			
100000139	2065	9	27.737361			
100000139	2065	10	26.560204			
100000139	5033	1	6.337666	BUSH RIVER RD	NW	RAMP & BUSH RIVER RD
100000139	5033	2	6.614515			
100000139	5033	3	6.052418			
100000139	5033	4	6.27122			
100000139	5033	5	6.638223			
100000139	5033	6	6.740491			
100000139	5033	7	5.977631			
100000139	5033	8	7.809739			
100000139	5033	9	6.88013			
100000139	5033	10	6.627029			
100000139	5034	1	6.677823	BUSH RIVER RD	SE	RAMP & BUSH RIVER RD
100000139	5034	2	7.509223			
100000139	5034	3	6.671796			

Node	Superlink	Run	Average Control Delay	Approach Street Name	Direction	Intersection
100000139	5034	4	7.724712			
100000139	5034	5	6.883263			
100000139	5034	6	7.647365			
100000139	5034	7	6.878795			
100000139	5034	8	6.835903			
100000139	5034	9	7.048626			
100000139	5034	10	7.253472			
100000140	5376	1	91.468317	SUNSET BLVD	W	SUMMER PLACE DR
100000140	5376	2	87.295875			
100000140	5376	3	70.281337			
100000140	5376	4	84.32038			
100000140	5376	5	83.498587			
100000140	5376	6	72.0342			
100000140	5376	7	73.444374			
100000140	5376	8	76.530985			
100000140	5376	9	68.62604			
100000140	5376	10	86.259543			
100000140	5378	1	123.851735	SUMMER PLACE DR	N	SUMMER PLACE DR
100000140	5378	2	173.037688			
100000140	5378	3	166.377375			
100000140	5378	4	73.073195			
100000140	5378	5	204.411895			
100000140	5378	6	72.197192			
100000140	5378	7	161.969			
100000140	5378	8	174.38602			
100000140	5378	9	54.929573			
100000140	5378	10	167.266899			
100000140	6489	1		FAIRLANE DR	S	SUMMER PLACE DR
100000140	6489	2				
100000140	6489	3				
100000140	6489	4				
100000140	6489	5				
100000140	6489	6				
100000140	6489	7				
100000140	6489	8				
100000140	6489	9				
100000140	6489	10				
100000140	6764	1	7.148323	SUNSET BLVD	E	SUMMER PLACE DR
100000140	6764	2	7.458754			
100000140	6764	3	5.702519			
100000140	6764	4	7.902449			
100000140	6764	5	6.274306			
100000140	6764	6	9.725101			
100000140	6764	7	8.520372			
100000140	6764	8	7.166014			
100000140	6764	9	6.689918			
100000140	6764	10	8.382112			
100000142	2053	1	9.791127	RAMP	NE	BUSH RIVER RD & RAMP
100000142	2053	2	9.384089			
100000142	2053	3	8.058614			
100000142	2053	4	9.505025			
100000142	2053	5	8.98661			
100000142	2053	6	8.6382			
100000142	2053	7	8.866627			
100000142	2053	8	8.776306			
100000142	2053	9	9.958677			
100000142	2053	10	9.078998			
100000142	5036	1	13.254509	BUSH RIVER RD	SE	BUSH RIVER RD & RAMP
100000142	5036	2	13.378537			
100000142	5036	3	11.736447			
100000142	5036	4	12.682913			
100000142	5036	5	13.480573			
100000142	5036	6	12.447662			
100000142	5036	7	14.081714			
100000142	5036	8	12.663794			
100000142	5036	9	10.114824			
100000142	5036	10	12.804801			
100000142	5037	1	5.756937	BUSH RIVER RD	NW	BUSH RIVER RD & RAMP
100000142	5037	2	5.792047			
100000142	5037	3	7.01581			
100000142	5037	4	6.043182			
100000142	5037	5	5.952424			
100000142	5037	6	5.692137			
100000142	5037	7	6.432112			
100000142	5037	8	6.180726			
100000142	5037	9	4.973677			
100000142	5037	10	5.559797			
100000143	5372	1	0	SUNSET BLVD	E	SUNSET BLVD & HEBRON DR
100000143	5372	2	0			
100000143	5372	3	0			
100000143	5372	4	0			
100000143	5372	5	0			
100000143	5372	6	0			
100000143	5372	7	0			
100000143	5372	8	0			
100000143	5372	9	0			
100000143	5372	10	0			
100000143	6763	1		HEBRON DR	N	SUNSET BLVD & HEBRON DR
100000143	6763	2				
100000143	6763	3				
100000143	6763	4				
100000143	6763	5				
100000143	6763	6				
100000143	6763	7				
100000143	6763	8				
100000143	6763	9				
100000143	6763	10				
100000143	6764	1	0	SUNSET BLVD	W	SUNSET BLVD & HEBRON DR
100000143	6764	2	0			
100000143	6764	3	0			
100000143	6764	4	0			
100000143	6764	5	0			
100000143	6764	6	0			
100000143	6764	7	0			
100000143	6764	8	0			
100000143	6764	9	0			
100000143	6764	10	0			
100000144	5376	1	23.388007	SUNSET BLVD	E	SUNSET BLVD
100000144	5376	2	20.885595			
100000144	5376	3	16.044009			

Node	Superlink	Run	Average Control Delay	Approach Street Name	Direction	Intersection
100000144	5376	4	58.99351			
100000144	5376	5	15.897413			
100000144	5376	6	133.453293			
100000144	5376	7	15.959166			
100000144	5376	8	15.396454			
100000144	5376	9	12.228042			
100000144	5376	10	21.31182			
100000144	6760	1	180.394047	W. HOSPTIAL DR	S	SUNSET BLVD
100000144	6760	2	138.610507			
100000144	6760	3	132.015303			
100000144	6760	4	137.45753			
100000144	6760	5	128.487558			
100000144	6760	6	173.38104			
100000144	6760	7	140.489785			
100000144	6760	8	163.056921			
100000144	6760	9	139.23825			
100000144	6760	10	164.508661			
100000144	6761	1		SUNSET CT	N	SUNSET BLVD
100000144	6761	2				
100000144	6761	3				
100000144	6761	4				
100000144	6761	5				
100000144	6761	6				
100000144	6761	7				
100000144	6761	8				
100000144	6761	9				
100000144	6761	10				
100000144	6762	1	62.900349	SUNSET BLVD	W	SUNSET BLVD
100000144	6762	2	64.452966			
100000144	6762	3	53.695206			
100000144	6762	4	62.392062			
100000144	6762	5	61.94932			
100000144	6762	6	52.200009			
100000144	6762	7	52.057334			
100000144	6762	8	56.741543			
100000144	6762	9	45.538774			
100000144	6762	10	60.829431			
100000150	3361	1	17.773551	I-26 EXIT 101 EB OFF RAMP	SW	I-26 EXIT 101 EB OFF RAMP & BROAD RIVER RD
100000150	3361	2	17.107833			
100000150	3361	3	19.072339			
100000150	3361	4	17.766476			
100000150	3361	5	18.302054			
100000150	3361	6	17.267141			
100000150	3361	7	16.797465			
100000150	3361	8	17.808016			
100000150	3361	9	21.544066			
100000150	3361	10	16.1205			
100000150	5071	1	0	BROAD RIVER RD	E	I-26 EXIT 101 EB OFF RAMP & BROAD RIVER RD
100000150	5071	2	0			
100000150	5071	3	0			
100000150	5071	4	0			
100000150	5071	5	0			
100000150	5071	6	0			
100000150	5071	7	0			
100000150	5071	8	0			
100000150	5071	9	0			
100000150	5071	10	0			
100000150	5073	1	0.041822	BROAD RIVER RD	W	I-26 EXIT 101 EB OFF RAMP & BROAD RIVER RD
100000150	5073	2	0.057453			
100000150	5073	3	0.057366			
100000150	5073	4	0.050534			
100000150	5073	5	0.059919			
100000150	5073	6	0.051478			
100000150	5073	7	0.054572			
100000150	5073	8	0.030509			
100000150	5073	9	0.040881			
100000150	5073	10	0.049683			
100000151	5072	1	2.356931	BROAD RIVER RD	E	BROAD RIVER RD & ON-RAMP from WB
100000151	5072	2	2.23121			
100000151	5072	3	1.937764			
100000151	5072	4	1.874178			
100000151	5072	5	1.897129			
100000151	5072	6	1.892913			
100000151	5072	7	1.707415			
100000151	5072	8	3.112897			
100000151	5072	9	1.971401			
100000151	5072	10	2.115735			
100000151	5075	1	1.474775	BROAD RIVER RD	W	BROAD RIVER RD & ON-RAMP from WB
100000151	5075	2	1.661783			
100000151	5075	3	1.654656			
100000151	5075	4	1.927904			
100000151	5075	5	1.494908			
100000151	5075	6	1.634272			
100000151	5075	7	1.235079			
100000151	5075	8	1.660286			
100000151	5075	9	1.577655			
100000151	5075	10	1.560287			
100000155	6084	1	4.804204	BROAD RIVER RD	N	BEATTY RD & BROAD RIVER RD
100000155	6084	2	4.019732			
100000155	6084	3	3.992117			
100000155	6084	4	4.355846			
100000155	6084	5	5.218935			
100000155	6084	6	3.69254			
100000155	6084	7	5.002255			
100000155	6084	8	4.112107			
100000155	6084	9	4.05951			
100000155	6084	10	3.723922			
100000155	6355	1	28.687339	BEATTY RD	E	BEATTY RD & BROAD RIVER RD
100000155	6355	2	27.758536			
100000155	6355	3	24.532186			
100000155	6355	4	27.620758			
100000155	6355	5	22.38869			
100000155	6355	6	28.184849			
100000155	6355	7	24.501176			
100000155	6355	8	24.722851			
100000155	6355	9	29.979939			
100000155	6355	10	20.076539			
100000155	6357	1	12.915287	BROAD RIVER RD	S	BEATTY RD & BROAD RIVER RD
100000155	6357	2	13.036419			
100000155	6357	3	12.00254			

Node	Superlink	Run	Average Control Delay	Approach Street Name	Direction	Intersection
100000155	6357	4	12.118893			
100000155	6357	5	13.381365			
100000155	6357	6	11.117893			
100000155	6357	7	12.483227			
100000155	6357	8	11.231503			
100000155	6357	9	12.333902			
100000155	6357	10	11.39523			
100000163	4947	1	5.486951	SUNSET BLVD	E	MCSWAIN DR
100000163	4947	2	4.798985			
100000163	4947	3	4.717291			
100000163	4947	4	5.571941			
100000163	4947	5	5.703202			
100000163	4947	6	4.955493			
100000163	4947	7	4.786633			
100000163	4947	8	5.36746			
100000163	4947	9	5.661334			
100000163	4947	10	6.002062			
100000163	5388	1	18.637216	SUNSET BLVD	W	MCSWAIN DR
100000163	5388	2	18.142869			
100000163	5388	3	13.615027			
100000163	5388	4	14.95102			
100000163	5388	5	15.189694			
100000163	5388	6	12.408649			
100000163	5388	7	8.364987			
100000163	5388	8	12.062948			
100000163	5388	9	11.921583			
100000163	5388	10	14.735512			
100000163	5389	1	42.650592	MCSWAIN DR	S	MCSWAIN DR
100000163	5389	2	55.561109			
100000163	5389	3	40.484188			
100000163	5389	4	46.936068			
100000163	5389	5	44.933126			
100000163	5389	6	37.20982			
100000163	5389	7	36.494789			
100000163	5389	8	42.583678			
100000163	5389	9	32.587363			
100000163	5389	10	40.326075			
100000163	5418	1	57.701645	CHRIS DR	N	MCSWAIN DR
100000163	5418	2	68.293837			
100000163	5418	3	61.820872			
100000163	5418	4	71.193304			
100000163	5418	5	61.08319			
100000163	5418	6	53.87807			
100000163	5418	7	60.849961			
100000163	5418	8	67.938781			
100000163	5418	9	64.892275			
100000163	5418	10	57.473363			
100000164	3354	1	0	I-26 EXIT 102 EB OFF RAMP	W	LAKE MURRAY BLVD & I-26 EXIT 102 EB OFF RAMP
100000164	3354	2	0			
100000164	3354	3	0			
100000164	3354	4	0			
100000164	3354	5	0			
100000164	3354	6	0			
100000164	3354	7	0			
100000164	3354	8	0			
100000164	3354	9	0			
100000164	3354	10	0			
100000164	5084	1	0	LAKE MURRAY BLVD	E	LAKE MURRAY BLVD & I-26 EXIT 102 EB OFF RAMP
100000164	5084	2	0			
100000164	5084	3	0			
100000164	5084	4	0			
100000164	5084	5	0			
100000164	5084	6	0			
100000164	5084	7	0			
100000164	5084	8	0			
100000164	5084	9	0			
100000164	5084	10	0			
100000164	5085	1	0	LAKE MURRAY BLVD	W	LAKE MURRAY BLVD & I-26 EXIT 102 EB OFF RAMP
100000164	5085	2	0			
100000164	5085	3	0			
100000164	5085	4	0			
100000164	5085	5	0			
100000164	5085	6	0			
100000164	5085	7	0			
100000164	5085	8	0			
100000164	5085	9	0			
100000164	5085	10	0			
100000165	3330	1	49.86509	EXIT 103 WB OFF RAMP	SE	HARBISON BLVD
100000165	3330	2	48.148516			
100000165	3330	3	49.243121			
100000165	3330	4	47.903207			
100000165	3330	5	49.888098			
100000165	3330	6	49.231022			
100000165	3330	7	50.274217			
100000165	3330	8	46.052087			
100000165	3330	9	48.853005			
100000165	3330	10	47.770904			
100000165	5096	1	14.077222	HARBISON BLVD	NE	HARBISON BLVD
100000165	5096	2	13.061335			
100000165	5096	3	11.882126			
100000165	5096	4	12.277968			
100000165	5096	5	12.337638			
100000165	5096	6	12.749887			
100000165	5096	7	13.306222			
100000165	5096	8	13.060082			
100000165	5096	9	12.745719			
100000165	5096	10	12.53428			
100000165	5102	1	8.458876	HARBISON BLVD	SW	HARBISON BLVD
100000165	5102	2	8.530747			
100000165	5102	3	9.315601			
100000165	5102	4	8.422018			
100000165	5102	5	8.993971			
100000165	5102	6	9.126561			
100000165	5102	7	7.687638			
100000165	5102	8	8.544866			
100000165	5102	9	8.021574			
100000165	5102	10	8.312953			
100000165	5103	1	133.688695	WOODCROSS DR	NW	HARBISON BLVD
100000165	5103	2	129.200152			
100000165	5103	3	125.727745			

Node	Superlink	Run	Average Control Delay	Approach Street Name	Direction	Intersection
100000165	5103	4	135.108985			
100000165	5103	5	126.391216			
100000165	5103	6	126.813952			
100000165	5103	7	128.894326			
100000165	5103	8	138.929336			
100000165	5103	9	135.406301			
100000165	5103	10	138.351877			
100000166	3343	1	0	I-26 EXIT 102 EBL OFF RAMP	E	LAKE MURRAY BLVD & I-26 EXIT 102 EBL OFF RAMP
100000166	3343	2	0			
100000166	3343	3	0			
100000166	3343	4	0			
100000166	3343	5	0			
100000166	3343	6	0			
100000166	3343	7	0			
100000166	3343	8	0			
100000166	3343	9	0			
100000166	3343	10	0			
100000166	5087	1	0	LAKE MURRAY BLVD	E	LAKE MURRAY BLVD & I-26 EXIT 102 EBL OFF RAMP
100000166	5087	2	0			
100000166	5087	3	0			
100000166	5087	4	0			
100000166	5087	5	0			
100000166	5087	6	0			
100000166	5087	7	0			
100000166	5087	8	0			
100000166	5087	9	0			
100000166	5087	10	0			
100000166	5088	1	0	LAKE MURRAY BLVD	W	LAKE MURRAY BLVD & I-26 EXIT 102 EBL OFF RAMP
100000166	5088	2	0			
100000166	5088	3	0			
100000166	5088	4	0			
100000166	5088	5	0			
100000166	5088	6	0			
100000166	5088	7	0			
100000166	5088	8	0			
100000166	5088	9	0			
100000166	5088	10	0			
100000167	3339	1	0	I-26 EXIT 102 WBL OFF RAMP	W	I-26 EXIT 102 WBL OFF RAMP & LAKE MURRAY BLVD
100000167	3339	2	0			
100000167	3339	3	0			
100000167	3339	4	0			
100000167	3339	5	0			
100000167	3339	6	0			
100000167	3339	7	0			
100000167	3339	8	0			
100000167	3339	9	0			
100000167	3339	10	0			
100000167	5088	1	0	LAKE MURRAY BLVD	E	I-26 EXIT 102 WBL OFF RAMP & LAKE MURRAY BLVD
100000167	5088	2	0			
100000167	5088	3	0			
100000167	5088	4	0			
100000167	5088	5	0			
100000167	5088	6	0			
100000167	5088	7	0			
100000167	5088	8	0			
100000167	5088	9	0			
100000167	5088	10	0			
100000167	5090	1	0	LAKE MURRAY BLVD	W	I-26 EXIT 102 WBL OFF RAMP & LAKE MURRAY BLVD
100000167	5090	2	0			
100000167	5090	3	0			
100000167	5090	4	0			
100000167	5090	5	0			
100000167	5090	6	0			
100000167	5090	7	0			
100000167	5090	8	0			
100000167	5090	9	0			
100000167	5090	10	0			
100000168	5366	1	31.107144	LEAPHART RD	N	SUNSET BLVD & LEAPHART RD
100000168	5366	2	32.296581			
100000168	5366	3	32.272365			
100000168	5366	4	29.999649			
100000168	5366	5	33.149003			
100000168	5366	6	27.389289			
100000168	5366	7	27.591062			
100000168	5366	8	33.941402			
100000168	5366	9	30.581527			
100000168	5366	10	30.345255			
100000168	5368	1	5.78072	SUNSET BLVD	E	SUNSET BLVD & LEAPHART RD
100000168	5368	2	6.102981			
100000168	5368	3	5.195671			
100000168	5368	4	5.43089			
100000168	5368	5	6.023574			
100000168	5368	6	5.392985			
100000168	5368	7	4.916041			
100000168	5368	8	5.761006			
100000168	5368	9	5.409502			
100000168	5368	10	5.664269			
100000168	5372	1	593.503155	SUNSET BLVD	W	SUNSET BLVD & LEAPHART RD
100000168	5372	2	475.980294			
100000168	5372	3	508.951063			
100000168	5372	4	509.415908			
100000168	5372	5	530.604813			
100000168	5372	6	488.073714			
100000168	5372	7	462.655207			
100000168	5372	8	452.115548			
100000168	5372	9	427.127131			
100000168	5372	10	511.571785			
100000171	3342	1	0	I-26 EXIT 102 WB OFF RAMP	E	LAKE MURRAY BLVD & I-26 EXIT 102 WB OFF RAMP
100000171	3342	2	0			
100000171	3342	3	0			
100000171	3342	4	0			
100000171	3342	5	0			
100000171	3342	6	0			
100000171	3342	7	0			
100000171	3342	8	0			
100000171	3342	9	0			
100000171	3342	10	0			
100000171	5092	1	0.015187	LAKE MURRAY BLVD	E	LAKE MURRAY BLVD & I-26 EXIT 102 WB OFF RAMP
100000171	5092	2	0.016623			
100000171	5092	3	0.008034			

Node	Superlink	Run	Average Control Delay	Approach Street Name	Direction	Intersection
100000171	5092	4	0.022851			
100000171	5092	5	0.011925			
100000171	5092	6	0.019931			
100000171	5092	7	0.008012			
100000171	5092	8	0.009559			
100000171	5092	9	0.006607			
100000171	5092	10	0.009586			
100000171	5093	1	0	LAKE MURRAY BLVD	W	LAKE MURRAY BLVD & I-26 EXIT 102 WB OFF RAMP
100000171	5093	2	0			
100000171	5093	3	0			
100000171	5093	4	0			
100000171	5093	5	0			
100000171	5093	6	0			
100000171	5093	7	0			
100000171	5093	8	0			
100000171	5093	9	0			
100000171	5093	10	0			
100000173	3212	1	61.600879		103 SE	HARBISON BLVD
100000173	3212	2	55.47582			
100000173	3212	3	54.417114			
100000173	3212	4	53.895589			
100000173	3212	5	53.939488			
100000173	3212	6	50.398573			
100000173	3212	7	57.31914			
100000173	3212	8	57.783827			
100000173	3212	9	58.022647			
100000173	3212	10	54.636738			
100000173	3213	1	15.940295		103 S	HARBISON BLVD
100000173	3213	2	14.919945			
100000173	3213	3	15.11866			
100000173	3213	4	16.126826			
100000173	3213	5	16.897786			
100000173	3213	6	14.536767			
100000173	3213	7	15.412426			
100000173	3213	8	14.374948			
100000173	3213	9	14.990735			
100000173	3213	10	15.11617			
100000173	5097	1	3.409971	HARBISON BLVD	NE	HARBISON BLVD
100000173	5097	2	4.159551			
100000173	5097	3	3.841609			
100000173	5097	4	3.473378			
100000173	5097	5	3.96894			
100000173	5097	6	4.504542			
100000173	5097	7	3.297829			
100000173	5097	8	3.552959			
100000173	5097	9	3.612429			
100000173	5097	10	4.150342			
100000173	5099	1	7.459554	HARBISON BLVD	SW	HARBISON BLVD
100000173	5099	2	7.854438			
100000173	5099	3	9.002403			
100000173	5099	4	7.52642			
100000173	5099	5	7.375155			
100000173	5099	6	8.178152			
100000173	5099	7	7.629216			
100000173	5099	8	7.752714			
100000173	5099	9	7.844624			
100000173	5099	10	7.644667			
100000175	3234	1	54.768921	RAMP	SE	PINEY GROVE RD & RAMP
100000175	3234	2	60.377164			
100000175	3234	3	56.464781			
100000175	3234	4	50.862671			
100000175	3234	5	53.465521			
100000175	3234	6	53.714594			
100000175	3234	7	51.341351			
100000175	3234	8	52.864478			
100000175	3234	9	60.10689			
100000175	3234	10	55.556687			
100000175	5112	1	3.748279	PINEY GROVE RD	W	PINEY GROVE RD & RAMP
100000175	5112	2	6.059605			
100000175	5112	3	2.821939			
100000175	5112	4	2.529787			
100000175	5112	5	6.332714			
100000175	5112	6	4.692899			
100000175	5112	7	7.62282			
100000175	5112	8	9.894442			
100000175	5112	9	1.555988			
100000175	5112	10	5.226474			
100000175	6544	1	4.301656	PINEY GROVE RD	E	PINEY GROVE RD & RAMP
100000175	6544	2	3.820565			
100000175	6544	3	3.362363			
100000175	6544	4	3.437879			
100000175	6544	5	4.246608			
100000175	6544	6	3.132606			
100000175	6544	7	4.120715			
100000175	6544	8	4.139583			
100000175	6544	9	3.85463			
100000175	6544	10	3.808955			
100000177	5112	1	10.589721	PINEY GROVE RD	E	PINEY GROVE RD
100000177	5112	2	13.024896			
100000177	5112	3	19.979403			
100000177	5112	4	12.506994			
100000177	5112	5	12.960875			
100000177	5112	6	12.348138			
100000177	5112	7	18.316686			
100000177	5112	8	18.688714			
100000177	5112	9	8.904021			
100000177	5112	10	13.972495			
100000177	5113	1	15.163817	PINEY GROVE RD	W	PINEY GROVE RD
100000177	5113	2	14.327482			
100000177	5113	3	14.571901			
100000177	5113	4	13.413931			
100000177	5113	5	16.660918			
100000177	5113	6	13.342079			
100000177	5113	7	14.042516			
100000177	5113	8	15.613125			
100000177	5113	9	11.216087			
100000177	5113	10	14.527499			
100000177	6513	1	5.867458	EXIT 104 WB OFF RAMP	N	PINEY GROVE RD
100000177	6513	2	6.258643			
100000177	6513	3	5.902066			

Node	Superlink	Run	Average Control Delay	Approach Street Name	Direction	Intersection
100000177	6513	4	5.869596			
100000177	6513	5	6.215658			
100000177	6513	6	6.265471			
100000177	6513	7	5.831487			
100000177	6513	8	6.011719			
100000177	6513	9	5.891329			
100000177	6513	10	5.963813			
100000177	6514	1	26.286825	EXIT 104 WB OFF RAMP	N	PINEY GROVE RD
100000177	6514	2	27.662844			
100000177	6514	3	27.562636			
100000177	6514	4	28.222463			
100000177	6514	5	29.015048			
100000177	6514	6	30.0693			
100000177	6514	7	27.50622			
100000177	6514	8	28.785927			
100000177	6514	9	29.686457			
100000177	6514	10	27.364026			
100000178	3301	1	26.190911	RAMP	SE	ST ANDREWS RD
100000178	3301	2	26.176049			
100000178	3301	3	25.776831			
100000178	3301	4	24.485134			
100000178	3301	5	25.025951			
100000178	3301	6	22.545843			
100000178	3301	7	25.39608			
100000178	3301	8	25.223609			
100000178	3301	9	26.261532			
100000178	3301	10	23.081786			
100000178	5118	1	5.80514	ST ANDREWS RD	E	ST ANDREWS RD
100000178	5118	2	5.823545			
100000178	5118	3	5.668722			
100000178	5118	4	5.667539			
100000178	5118	5	5.648911			
100000178	5118	6	6.017629			
100000178	5118	7	5.535969			
100000178	5118	8	5.741677			
100000178	5118	9	5.589174			
100000178	5118	10	5.733134			
100000178	5119	1	25.578769	WOODLAND HILLS RD	N	ST ANDREWS RD
100000178	5119	2	22.923442			
100000178	5119	3	22.579956			
100000178	5119	4	21.764028			
100000178	5119	5	21.632775			
100000178	5119	6	23.328807			
100000178	5119	7	20.251248			
100000178	5119	8	23.146476			
100000178	5119	9	21.449266			
100000178	5119	10	25.320801			
100000178	5120	1	9.357841	ST ANDREWS RD	W	ST ANDREWS RD
100000178	5120	2	9.303083			
100000178	5120	3	8.464862			
100000178	5120	4	9.469734			
100000178	5120	5	9.065198			
100000178	5120	6	9.315592			
100000178	5120	7	9.574968			
100000178	5120	8	9.273855			
100000178	5120	9	9.938169			
100000178	5120	10	9.992862			
100000179	3219	1	0	RAMP	S	ST ANDREWS RD & RAMP
100000179	3219	2	0			
100000179	3219	3	0			
100000179	3219	4	0			
100000179	3219	5	0			
100000179	3219	6	0			
100000179	3219	7	0			
100000179	3219	8	0			
100000179	3219	9	0			
100000179	3219	10	0			
100000179	5116	1	17.564903	ST ANDREWS RD	E	ST ANDREWS RD & RAMP
100000179	5116	2	14.889135			
100000179	5116	3	15.363992			
100000179	5116	4	15.429448			
100000179	5116	5	17.319032			
100000179	5116	6	13.035261			
100000179	5116	7	15.914545			
100000179	5116	8	14.864132			
100000179	5116	9	17.222494			
100000179	5116	10	16.490913			
100000179	5118	1	0	ST ANDREWS RD	W	ST ANDREWS RD & RAMP
100000179	5118	2	0			
100000179	5118	3	0			
100000179	5118	4	0			
100000179	5118	5	0			
100000179	5118	6	0			
100000179	5118	7	0			
100000179	5118	8	0			
100000179	5118	9	0			
100000179	5118	10	0			
100000182	3292	1	0	EXIT 106 WB OFF RAMP	NE	ST ANDREWS RD
100000182	3292	2	0			
100000182	3292	3	0			
100000182	3292	4	0			
100000182	3292	5	0			
100000182	3292	6	0			
100000182	3292	7	0			
100000182	3292	8	0			
100000182	3292	9	0			
100000182	3292	10	0			
100000182	5123	1	0	ST ANDREWS RD	E	ST ANDREWS RD
100000182	5123	2	0			
100000182	5123	3	0			
100000182	5123	4	0			
100000182	5123	5	0			
100000182	5123	6	0			
100000182	5123	7	0			
100000182	5123	8	0			
100000182	5123	9	0			
100000182	5123	10	0			
100000182	5124	1	0	ST ANDREWS RD	SW	ST ANDREWS RD
100000182	5124	2	0			
100000182	5124	3	0			

Node	Superlink	Run	Average Control Delay	Approach Street Name	Direction	Intersection
100000182	5124	4	0			
100000182	5124	5	0			
100000182	5124	6	0			
100000182	5124	7	0			
100000182	5124	8	0			
100000182	5124	9	0			
100000182	5124	10	0			
100000184	5499	1	18.39937	N ARROWWOOD RD	S	ARROWWOOD RD
100000184	5499	2	17.154234			
100000184	5499	3	17.378786			
100000184	5499	4	16.770017			
100000184	5499	5	16.277268			
100000184	5499	6	21.724715			
100000184	5499	7	19.082368			
100000184	5499	8	19.300962			
100000184	5499	9	21.359881			
100000184	5499	10	19.735807			
100000184	5500	1	56.603645	ARROWWOOD RD	N	ARROWWOOD RD
100000184	5500	2	48.363767			
100000184	5500	3	54.01798			
100000184	5500	4	46.867687			
100000184	5500	5	45.536123			
100000184	5500	6	43.850509			
100000184	5500	7	48.943319			
100000184	5500	8	51.153916			
100000184	5500	9	62.913386			
100000184	5500	10	38.416234			
100000184	6497	1	164.975389	BUSH RIVER RD	W	ARROWWOOD RD
100000184	6497	2	131.772148			
100000184	6497	3	114.501715			
100000184	6497	4	130.422401			
100000184	6497	5	148.666223			
100000184	6497	6	179.309557			
100000184	6497	7	141.733159			
100000184	6497	8	147.05732			
100000184	6497	9	124.935274			
100000184	6497	10	123.853332			
100000184	6505	1	15.757976	BUSH RIVER RD	E	ARROWWOOD RD
100000184	6505	2	16.628435			
100000184	6505	3	17.760479			
100000184	6505	4	16.775284			
100000184	6505	5	18.22122			
100000184	6505	6	14.798273			
100000184	6505	7	21.214314			
100000184	6505	8	18.434556			
100000184	6505	9	15.927857			
100000184	6505	10	18.202989			
100000185	3230	1	79.258557	RAMP	W	GREYSTONE BLVD
100000185	3230	2	74.572647			
100000185	3230	3	69.248838			
100000185	3230	4	56.438754			
100000185	3230	5	79.861808			
100000185	3230	6	59.95309			
100000185	3230	7	93.395361			
100000185	3230	8	101.097289			
100000185	3230	9	51.669857			
100000185	3230	10	72.254251			
100000185	5140	1	0.463252	GREYSTONE BLVD	N	GREYSTONE BLVD
100000185	5140	2	0.532599			
100000185	5140	3	0.510293			
100000185	5140	4	0.535972			
100000185	5140	5	0.794661			
100000185	5140	6	0.355945			
100000185	5140	7	0.494782			
100000185	5140	8	0.487937			
100000185	5140	9	0.299559			
100000185	5140	10	0.423474			
100000185	5141	1	5.39673	GREYSTONE BLVD	S	GREYSTONE BLVD
100000185	5141	2	4.675411			
100000185	5141	3	5.354241			
100000185	5141	4	5.290821			
100000185	5141	5	6.122561			
100000185	5141	6	4.27121			
100000185	5141	7	4.533549			
100000185	5141	8	7.411892			
100000185	5141	9	4.17006			
100000185	5141	10	6.479215			
100000186	4949	1	34.903594	SUNSET BLVD	W	HARBOR DR
100000186	4949	2	34.366997			
100000186	4949	3	29.016303			
100000186	4949	4	35.527351			
100000186	4949	5	33.143623			
100000186	4949	6	28.183501			
100000186	4949	7	28.882501			
100000186	4949	8	35.698673			
100000186	4949	9	26.575767			
100000186	4949	10	32.359322			
100000186	5386	1	935.751426	HARBOR DR	N	HARBOR DR
100000186	5386	2	1011.238098			
100000186	5386	3	816.985235			
100000186	5386	4	622.191794			
100000186	5386	5	928.05481			
100000186	5386	6	995.285441			
100000186	5386	7	379.87763			
100000186	5386	8	942.48205			
100000186	5386	9	751.305209			
100000186	5386	10	855.406901			
100000186	5387	1	237.252317	E HOSPITAL DR	S	HARBOR DR
100000186	5387	2	292.99678			
100000186	5387	3	307.821944			
100000186	5387	4	274.292332			
100000186	5387	5	286.111962			
100000186	5387	6	274.322506			
100000186	5387	7	161.7907			
100000186	5387	8	367.127818			
100000186	5387	9	309.084321			
100000186	5387	10	290.055772			
100000186	6762	1	60.787106	SUNSET BLVD	E	HARBOR DR
100000186	6762	2	49.950387			
100000186	6762	3	55.590054			

Node	Superlink	Run	Average Control Delay	Approach Street Name	Direction	Intersection
100000186	6762	4	63.395904			
100000186	6762	5	44.17784			
100000186	6762	6	81.734678			
100000186	6762	7	44.699477			
100000186	6762	8	47.927272			
100000186	6762	9	53.475457			
100000186	6762	10	49.733596			
100000187	6057	1	214.880039	BROAD RIVER RD	NW	BROAD RIVER RD
100000187	6057	2	185.099979			
100000187	6057	3	159.454097			
100000187	6057	4	187.163636			
100000187	6057	5	150.907065			
100000187	6057	6	209.356123			
100000187	6057	7	140.455459			
100000187	6057	8	160.251716			
100000187	6057	9	220.738123			
100000187	6057	10	170.811752			
100000187	6059	1	13.713563	BROAD RIVER RD	SE	BROAD RIVER RD
100000187	6059	2	22.197392			
100000187	6059	3	8.054405			
100000187	6059	4	23.214335			
100000187	6059	5	28.532436			
100000187	6059	6	21.566659			
100000187	6059	7	42.050094			
100000187	6059	8	26.573942			
100000187	6059	9	4.785718			
100000187	6059	10	14.988131			
100000187	6060	1	256.2549	MARLEY DR	SW	BROAD RIVER RD
100000187	6060	2	316.455222			
100000187	6060	3	63.679708			
100000187	6060	4	430.759681			
100000187	6060	5	122.373445			
100000187	6060	6	91.295344			
100000187	6060	7	333.957261			
100000187	6060	8	145.162981			
100000187	6060	9	56.093419			
100000187	6060	10	68.197121			
100000187	6061	1	432.367478	BRIARGATE CIR	NE	BROAD RIVER RD
100000187	6061	2	306.771095			
100000187	6061	3	48.718382			
100000187	6061	4	337.783985			
100000187	6061	5	81.35955			
100000187	6061	6	318.878749			
100000187	6061	7	69.616467			
100000187	6061	8	79.760882			
100000187	6061	9	667.111353			
100000187	6061	10	72.036348			
100000188	3221	1	46.786265	RAMP	W	GREYSTONE BLVD & RAMP
100000188	3221	2	19.807864			
100000188	3221	3	37.140052			
100000188	3221	4	32.145246			
100000188	3221	5	42.697841			
100000188	3221	6	18.568915			
100000188	3221	7	16.562147			
100000188	3221	8	36.484897			
100000188	3221	9	26.889253			
100000188	3221	10	25.20579			
100000188	5143	1	2.45606	GREYSTONE BLVD	N	GREYSTONE BLVD & RAMP
100000188	5143	2	3.704555			
100000188	5143	3	2.200037			
100000188	5143	4	3.543311			
100000188	5143	5	2.2464			
100000188	5143	6	2.241169			
100000188	5143	7	8.679943			
100000188	5143	8	4.689167			
100000188	5143	9	3.530925			
100000188	5143	10	2.487852			
100000188	5144	1	0.073891	GREYSTONE BLVD	S	GREYSTONE BLVD & RAMP
100000188	5144	2	0.068819			
100000188	5144	3	0.036425			
100000188	5144	4	0.064435			
100000188	5144	5	0.010422			
100000188	5144	6	0.03929			
100000188	5144	7	0.094809			
100000188	5144	8	0.085101			
100000188	5144	9	0.049246			
100000188	5144	10	0.077962			
100000189	4346	1	765.569581	I-20 EXIT 65 WB OFF RAMP	SW	I-20 EXIT 65 WB OFF RAMP
100000189	4346	2	583.753352			
100000189	4346	3	709.075887			
100000189	4346	4	668.141169			
100000189	4346	5	651.930783			
100000189	4346	6	768.11322			
100000189	4346	7	582.206403			
100000189	4346	8	571.405384			
100000189	4346	9	775.267415			
100000189	4346	10	626.924216			
100000189	6057	1	84.56343	BROAD RIVER RD	SE	I-20 EXIT 65 WB OFF RAMP
100000189	6057	2	73.967694			
100000189	6057	3	74.055309			
100000189	6057	4	91.729458			
100000189	6057	5	95.384098			
100000189	6057	6	72.409376			
100000189	6057	7	111.351432			
100000189	6057	8	82.264038			
100000189	6057	9	21.986772			
100000189	6057	10	73.327362			
100000189	6447	1	165.845155	BROAD RIVER RD	NW	I-20 EXIT 65 WB OFF RAMP
100000189	6447	2	101.208127			
100000189	6447	3	94.534371			
100000189	6447	4	118.661173			
100000189	6447	5	83.762871			
100000189	6447	6	115.869715			
100000189	6447	7	71.243553			
100000189	6447	8	92.100449			
100000189	6447	9	170.397438			
100000189	6447	10	98.696299			
100000190	4341	1	403.29408	I-20 EXIT 65 EB OFF RAMP	E	BROAD RIVER RD
100000190	4341	2	213.669208			
100000190	4341	3	249.125907			

Node	Superlink	Run	Average Control Delay	Approach Street Name	Direction	Intersection
100000190	4341	4	239.642334			
100000190	4341	5	171.827948			
100000190	4341	6	320.195102			
100000190	4341	7	73.824417			
100000190	4341	8	291.994516			
100000190	4341	9	914.847548			
100000190	4341	10	118.540787			
100000190	5148	1	1.9879	BROAD RIVER RD	SE	BROAD RIVER RD
100000190	5148	2	1.554072			
100000190	5148	3	1.934897			
100000190	5148	4	1.794709			
100000190	5148	5	1.998179			
100000190	5148	6	1.786924			
100000190	5148	7	1.842467			
100000190	5148	8	1.830929			
100000190	5148	9	1.685738			
100000190	5148	10	1.809625			
100000190	6445	1	15.511608	BROAD RIVER RD	NW	BROAD RIVER RD
100000190	6445	2	9.724821			
100000190	6445	3	8.685213			
100000190	6445	4	11.70775			
100000190	6445	5	7.888641			
100000190	6445	6	10.605524			
100000190	6445	7	7.15842			
100000190	6445	8	8.426102			
100000190	6445	9	15.485997			
100000190	6445	10	8.935988			
100000190	6446	1		SERVICE RD	SW	BROAD RIVER RD
100000190	6446	2				
100000190	6446	3				
100000190	6446	4				
100000190	6446	5				
100000190	6446	6				
100000190	6446	7				
100000190	6446	8				
100000190	6446	9				
100000190	6446	10				
100000191	5399	1	0.039194	HARBOR DR	S	HARBOR DR & OAKWOOD DR
100000191	5399	2	0.263717			
100000191	5399	3	0			
100000191	5399	4	0.068489			
100000191	5399	5	0			
100000191	5399	6	0.161753			
100000191	5399	7	1.064072			
100000191	5399	8	0.059285			
100000191	5399	9	0			
100000191	5399	10	0.115883			
100000191	5414	1	312.692294	OAKWOOD DR	NE	HARBOR DR & OAKWOOD DR
100000191	5414	2	156.640941			
100000191	5414	3	390.309448			
100000191	5414	4	249.682913			
100000191	5414	5	183.747221			
100000191	5414	6	304.216377			
100000191	5414	7	101.270008			
100000191	5414	8	620.485089			
100000191	5414	9	177.303813			
100000191	5414	10	199.634692			
100000191	5420	1	459.602509	HARBOR DR	N	HARBOR DR & OAKWOOD DR
100000191	5420	2	176.435866			
100000191	5420	3	473.27978			
100000191	5420	4	273.509516			
100000191	5420	5	73.912492			
100000191	5420	6	399.666412			
100000191	5420	7	73.856964			
100000191	5420	8	731.318298			
100000191	5420	9	262.212502			
100000191	5420	10	538.604362			
100000193	4350	1	36.423018	I-20 EXIT 68 EB OFF RAMP	E	BUCKNER RD
100000193	4350	2	29.275479			
100000193	4350	3	26.992496			
100000193	4350	4	25.380573			
100000193	4350	5	25.895305			
100000193	4350	6	29.25673			
100000193	4350	7	23.761972			
100000193	4350	8	26.101658			
100000193	4350	9	78.091045			
100000193	4350	10	28.389715			
100000193	5154	1	21.495595	MONTICELLO RD	N	BUCKNER RD
100000193	5154	2	20.667771			
100000193	5154	3	18.344333			
100000193	5154	4	19.312026			
100000193	5154	5	19.415182			
100000193	5154	6	19.699628			
100000193	5154	7	19.03994			
100000193	5154	8	18.214232			
100000193	5154	9	20.034871			
100000193	5154	10	20.197188			
100000193	5155	1	26.962344	MONTICELLO RD	SE	BUCKNER RD
100000193	5155	2	39.199612			
100000193	5155	3	21.70605			
100000193	5155	4	27.087122			
100000193	5155	5	21.10791			
100000193	5155	6	22.877197			
100000193	5155	7	21.40673			
100000193	5155	8	19.796471			
100000193	5155	9	23.484046			
100000193	5155	10	27.084284			
100000193	5163	1	11.628614	BUCKNER RD	SW	BUCKNER RD
100000193	5163	2	12.631686			
100000193	5163	3	10.315716			
100000193	5163	4	11.944996			
100000193	5163	5	11.079828			
100000193	5163	6	12.790268			
100000193	5163	7	10.2781			
100000193	5163	8	11.706468			
100000193	5163	9	10.623104			
100000193	5163	10	10.372239			
100000195	5150	1	7.874909	BROAD RIVER RD	SE	LONGCREEK DR & BROAD RIVER RD
100000195	5150	2	9.700599			
100000195	5150	3	9.259983			

Node	Superlink	Run	Average Control Delay	Approach Street Name	Direction	Intersection
100000195	5150	4	8.202587			
100000195	5150	5	7.938278			
100000195	5150	6	8.990084			
100000195	5150	7	9.186988			
100000195	5150	8	9.760864			
100000195	5150	9	9.353981			
100000195	5150	10	8.75601			
100000195	6049	1	12.188583	BROAD RIVER RD	NW	LONGCREEK DR & BROAD RIVER RD
100000195	6049	2	7.237024			
100000195	6049	3	6.945747			
100000195	6049	4	8.559851			
100000195	6049	5	5.189868			
100000195	6049	6	7.875546			
100000195	6049	7	5.231661			
100000195	6049	8	6.433105			
100000195	6049	9	11.635305			
100000195	6049	10	7.150817			
100000195	6052	1	101.748779	LONGCREEK DR	SW	LONGCREEK DR & BROAD RIVER RD
100000195	6052	2	86.520338			
100000195	6052	3	81.94004			
100000195	6052	4	105.514812			
100000195	6052	5	86.019804			
100000195	6052	6	90.716519			
100000195	6052	7	71.985464			
100000195	6052	8	80.191377			
100000195	6052	9	132.185923			
100000195	6052	10	81.00265			
100000196	5166	1	1.166477	MONTICELLO RD	SE	SERVICE RD
100000196	5166	2	0.738353			
100000196	5166	3	1.281243			
100000196	5166	4	0.881717			
100000196	5166	5	0.957981			
100000196	5166	6	1.380516			
100000196	5166	7	1.406942			
100000196	5166	8	0.722742			
100000196	5166	9	0.984418			
100000196	5166	10	1.253342			
100000196	5169	1	11.474449	SERVICE RD	SW	SERVICE RD
100000196	5169	2	14.921877			
100000196	5169	3	16.863027			
100000196	5169	4	17.647685			
100000196	5169	5	14.149676			
100000196	5169	6	18.145249			
100000196	5169	7	12.876175			
100000196	5169	8	15.923798			
100000196	5169	9	14.2964			
100000196	5169	10	10.991647			
100000196	5172	1	1.208418	MONTICELLO RD	NW	SERVICE RD
100000196	5172	2	1.367584			
100000196	5172	3	1.035289			
100000196	5172	4	2.446671			
100000196	5172	5	2.061676			
100000196	5172	6	1.484417			
100000196	5172	7	2.108201			
100000196	5172	8	1.209301			
100000196	5172	9	1.765375			
100000196	5172	10	1.558794			
100000198	4354	1	0	RAMP	N	RAMP & I-20 EXIT 68 EB ON RAMP
100000198	4354	2	0			
100000198	4354	3	0			
100000198	4354	4	0			
100000198	4354	5	0			
100000198	4354	6	0			
100000198	4354	7	0			
100000198	4354	8	0			
100000198	4354	9	0			
100000198	4354	10	0			
100000198	5158	1		RAMP	NW	RAMP & I-20 EXIT 68 EB ON RAMP
100000198	5158	2				
100000198	5158	3				
100000198	5158	4				
100000198	5158	5				
100000198	5158	6				
100000198	5158	7				
100000198	5158	8				
100000198	5158	9				
100000198	5158	10				
100000200	5174	1	7.654177	MONTICELLO RD	NW	MONTICELLO RD
100000200	5174	2	7.494289			
100000200	5174	3	7.592044			
100000200	5174	4	9.318478			
100000200	5174	5	8.733484			
100000200	5174	6	7.731369			
100000200	5174	7	7.082506			
100000200	5174	8	7.748559			
100000200	5174	9	7.218162			
100000200	5174	10	7.313444			
100000200	6041	1	9.960327	MONTICELLO RD	SE	MONTICELLO RD
100000200	6041	2	6.868055			
100000200	6041	3	5.424744			
100000200	6041	4	10.402112			
100000200	6041	5	5.87177			
100000200	6041	6	11.392708			
100000200	6041	7	6.066334			
100000200	6041	8	6.214853			
100000200	6041	9	21.508419			
100000200	6041	10	7.331517			
100000200	6044	1	21.241327	PEEPLES ST	NE	MONTICELLO RD
100000200	6044	2	15.995889			
100000200	6044	3	13.438358			
100000200	6044	4	17.023891			
100000200	6044	5	14.03668			
100000200	6044	6	16.252721			
100000200	6044	7	12.275456			
100000200	6044	8	14.262017			
100000200	6044	9	21.789194			
100000200	6044	10	16.55647			
100000200	6046	1	23.744278	BLUE RIDGE TER	S	MONTICELLO RD
100000200	6046	2	25.55661			
100000200	6046	3	24.798008			

Node	Superlink	Run	Average Control Delay	Approach Street Name	Direction	Intersection
100000200	6046	4	23.913519			
100000200	6046	5	26.484959			
100000200	6046	6	26.812387			
100000200	6046	7	22.224171			
100000200	6046	8	26.574647			
100000200	6046	9	22.386396			
100000200	6046	10	24.807982			
100000201	5157	1	3.126104	BUCKNER RD	SW	BUCKNER RD & TO BUCKNER ROAD
100000201	5157	2	4.344594			
100000201	5157	3	2.550029			
100000201	5157	4	4.055004			
100000201	5157	5	3.07029			
100000201	5157	6	3.171145			
100000201	5157	7	3.982635			
100000201	5157	8	4.876394			
100000201	5157	9	3.683081			
100000201	5157	10	2.270283			
100000201	5161	1	0.078834	TO BUCKNER ROAD	N	BUCKNER RD & TO BUCKNER ROAD
100000201	5161	2	0.004411			
100000201	5161	3	0.396702			
100000201	5161	4	0.33494			
100000201	5161	5	0.040631			
100000201	5161	6	0.304542			
100000201	5161	7	0.580128			
100000201	5161	8	0.339532			
100000201	5161	9	1.130257			
100000201	5161	10	0.01169			
100000201	5163	1	0.005123	BUCKNER RD	NE	BUCKNER RD & TO BUCKNER ROAD
100000201	5163	2	0.004979			
100000201	5163	3	0.004696			
100000201	5163	4	0.00419			
100000201	5163	5	0.004788			
100000201	5163	6	0.005123			
100000201	5163	7	0.007376			
100000201	5163	8	0.006418			
100000201	5163	9	0.003737			
100000201	5163	10	0.00364			
100000203	5169	1		SERVICE RD	E	SERVICE RD & MONTICELLO RD
100000203	5169	2				
100000203	5169	3				
100000203	5169	4				
100000203	5169	5				
100000203	5169	6				
100000203	5169	7				
100000203	5169	8				
100000203	5169	9				
100000203	5169	10				
100000203	5171	1		MONTICELLO RD	N	SERVICE RD & MONTICELLO RD
100000203	5171	2				
100000203	5171	3				
100000203	5171	4				
100000203	5171	5				
100000203	5171	6				
100000203	5171	7				
100000203	5171	8				
100000203	5171	9				
100000203	5171	10				
100000203	5173	1	0.185257	SERVICE RD	W	SERVICE RD & MONTICELLO RD
100000203	5173	2	0.168435			
100000203	5173	3	0.432946			
100000203	5173	4	0.196495			
100000203	5173	5	0.208893			
100000203	5173	6	0.352159			
100000203	5173	7	0.622566			
100000203	5173	8	0.421544			
100000203	5173	9	0.247898			
100000203	5173	10	0.411268			
100000250	6539	1	3.733309	BUSH RIVER RD	NW	E MEADOW CT/WOODLAND VILLAGE DR
100000250	6539	2	5.651773			
100000250	6539	3	4.094399			
100000250	6539	4	5.132548			
100000250	6539	5	4.793563			
100000250	6539	6	5.38242			
100000250	6539	7	4.075698			
100000250	6539	8	4.530482			
100000250	6539	9	4.758665			
100000250	6539	10	4.795095			
100000250	6546	1	28.521705	OUTLET POINTE BLVD	NE	E MEADOW CT/WOODLAND VILLAGE DR
100000250	6546	2	39.035941			
100000250	6546	3	31.556798			
100000250	6546	4	33.858978			
100000250	6546	5	45.686238			
100000250	6546	6	36.134584			
100000250	6546	7	28.259507			
100000250	6546	8	39.505806			
100000250	6546	9	44.104343			
100000250	6546	10	44.369173			
100000250	6547	1	35.033567	E MEADOW CT/WOODLAND VILLAGE DR	SW	E MEADOW CT/WOODLAND VILLAGE DR
100000250	6547	2	46.721826			
100000250	6547	3	34.884138			
100000250	6547	4	39.00478			
100000250	6547	5	51.168426			
100000250	6547	6	41.942844			
100000250	6547	7	33.160012			
100000250	6547	8	33.930418			
100000250	6547	9	41.104739			
100000250	6547	10	52.581375			
100000250	6548	1	17.643315	BUSH RIVER RD	SE	E MEADOW CT/WOODLAND VILLAGE DR
100000250	6548	2	54.427114			
100000250	6548	3	25.90334			
100000250	6548	4	33.132152			
100000250	6548	5	65.268719			
100000250	6548	6	31.032524			
100000250	6548	7	21.783436			
100000250	6548	8	61.7642			
100000250	6548	9	38.85469			
100000250	6548	10	73.935747			
100000252	5125	1	15.215924	BUSH RIVER RD	E	MORNINGHILL DR
100000252	5125	2	13.217709			
100000252	5125	3	15.529913			

Node	Superlink	Run	Average Control Delay	Approach Street Name	Direction	Intersection
100000252	5125	4	15.949729			
100000252	5125	5	14.321656			
100000252	5125	6	14.541517			
100000252	5125	7	14.51895			
100000252	5125	8	15.111726			
100000252	5125	9	12.917833			
100000252	5125	10	14.445024			
100000252	5487	1	116.774892	MORNINGHILL DR	S	MORNINGHILL DR
100000252	5487	2	102.258944			
100000252	5487	3	119.264529			
100000252	5487	4	87.578313			
100000252	5487	5	117.167078			
100000252	5487	6	98.759081			
100000252	5487	7	119.522603			
100000252	5487	8	123.843699			
100000252	5487	9	151.316222			
100000252	5487	10	109.564998			
100000252	5488	1	18.62307	RAMP	N	MORNINGHILL DR
100000252	5488	2	16.233308			
100000252	5488	3	17.982285			
100000252	5488	4	17.565027			
100000252	5488	5	17.398698			
100000252	5488	6	17.834122			
100000252	5488	7	16.733743			
100000252	5488	8	17.85032			
100000252	5488	9	16.727705			
100000252	5488	10	17.478017			
100000252	6505	1	122.274419	BUSH RIVER RD	W	MORNINGHILL DR
100000252	6505	2	111.00554			
100000252	6505	3	108.715478			
100000252	6505	4	111.478443			
100000252	6505	5	116.832275			
100000252	6505	6	119.025834			
100000252	6505	7	115.58304			
100000252	6505	8	112.051536			
100000252	6505	9	96.342523			
100000252	6505	10	109.91399			
100000255	5038	1	0.362336	BUSH RIVER RD	E	BUSH RIVER RD & INDEPENDENCE AVE
100000255	5038	2	0.351055			
100000255	5038	3	0.214172			
100000255	5038	4	0.265122			
100000255	5038	5	0.323522			
100000255	5038	6	0.309227			
100000255	5038	7	0.219876			
100000255	5038	8	0.268762			
100000255	5038	9	0.53961			
100000255	5038	10	0.392724			
100000255	5470	1	46.174724	INDEPENDENCE AVE	N	BUSH RIVER RD & INDEPENDENCE AVE
100000255	5470	2	45.944898			
100000255	5470	3	53.185898			
100000255	5470	4	48.603226			
100000255	5470	5	39.263049			
100000255	5470	6	46.401599			
100000255	5470	7	43.227048			
100000255	5470	8	63.414266			
100000255	5470	9	54.025646			
100000255	5470	10	45.904006			
100000255	5471	1	8.522803	BUSH RIVER RD	W	BUSH RIVER RD & INDEPENDENCE AVE
100000255	5471	2	10.47206			
100000255	5471	3	10.035233			
100000255	5471	4	10.261626			
100000255	5471	5	9.316426			
100000255	5471	6	10.100409			
100000255	5471	7	7.220125			
100000255	5471	8	11.449857			
100000255	5471	9	11.775493			
100000255	5471	10	10.895112			
100000256	5131	1	1.733542	BUSH RIVER RD	W	BUSH RIVER RD & ZIMALCREST DR
100000256	5131	2	1.852551			
100000256	5131	3	2.150012			
100000256	5131	4	1.520935			
100000256	5131	5	2.024584			
100000256	5131	6	1.812472			
100000256	5131	7	2.252963			
100000256	5131	8	1.599301			
100000256	5131	9	1.888093			
100000256	5131	10	1.558512			
100000256	5465	1	6.809166	BUSH RIVER RD	E	BUSH RIVER RD & ZIMALCREST DR
100000256	5465	2	5.253013			
100000256	5465	3	6.072361			
100000256	5465	4	7.463893			
100000256	5465	5	6.799512			
100000256	5465	6	6.35431			
100000256	5465	7	6.749674			
100000256	5465	8	7.060795			
100000256	5465	9	6.742432			
100000256	5465	10	6.099618			
100000256	5484	1	62.150381	ZIMALCREST DR	S	BUSH RIVER RD & ZIMALCREST DR
100000256	5484	2	57.808639			
100000256	5484	3	51.03672			
100000256	5484	4	57.00807			
100000256	5484	5	50.610736			
100000256	5484	6	55.308168			
100000256	5484	7	52.889418			
100000256	5484	8	50.606122			
100000256	5484	9	52.519754			
100000256	5484	10	53.669599			
100000256	5485	1	12.159845	ZIMALCREST DR	N	BUSH RIVER RD & ZIMALCREST DR
100000256	5485	2	11.392932			
100000256	5485	3	11.971071			
100000256	5485	4	10.805538			
100000256	5485	5	12.523892			
100000256	5485	6	11.038829			
100000256	5485	7	11.456768			
100000256	5485	8	12.693916			
100000256	5485	9	10.751514			
100000256	5485	10	11.968615			
100000259	5465	1	0	BUSH RIVER RD	W	NOTTINGWOOD DR & BUSH RIVER RD
100000259	5465	2	0			
100000259	5465	3	0			

Node	Superlink	Run	Average Control Delay	Approach Street Name	Direction	Intersection
100000259	5465	4	0			
100000259	5465	5	0			
100000259	5465	6	0			
100000259	5465	7	0			
100000259	5465	8	0			
100000259	5465	9	0			
100000259	5465	10	0			
100000259	5471	1	0	BUSH RIVER RD	E	NOTTINGWOOD DR & BUSH RIVER RD
100000259	5471	2	0			
100000259	5471	3	0			
100000259	5471	4	0			
100000259	5471	5	0			
100000259	5471	6	0			
100000259	5471	7	0			
100000259	5471	8	0			
100000259	5471	9	0			
100000259	5471	10	0			
100000259	5472	1		NOTTINGWOOD DR	S	NOTTINGWOOD DR & BUSH RIVER RD
100000259	5472	2				
100000259	5472	3				
100000259	5472	4				
100000259	5472	5				
100000259	5472	6				
100000259	5472	7				
100000259	5472	8				
100000259	5472	9				
100000259	5472	10				
100000262	5502	1	11.265302	BUSH RIVER RD	E	DUTCH SQUARE ENTRANCE
100000262	5502	2	9.784562			
100000262	5502	3	11.099761			
100000262	5502	4	11.376686			
100000262	5502	5	11.032594			
100000262	5502	6	10.198737			
100000262	5502	7	10.441311			
100000262	5502	8	10.198472			
100000262	5502	9	9.21084			
100000262	5502	10	8.718713			
100000262	5506	1	19.351997	COLONIAL LIFE BLVD W	N	DUTCH SQUARE ENTRANCE
100000262	5506	2	15.988906			
100000262	5506	3	15.054143			
100000262	5506	4	17.638994			
100000262	5506	5	17.991254			
100000262	5506	6	17.632486			
100000262	5506	7	16.812			
100000262	5506	8	17.106693			
100000262	5506	9	16.590279			
100000262	5506	10	15.582676			
100000262	5509	1	66.208505	DUTCH SQUARE ENTRANCE	S	DUTCH SQUARE ENTRANCE
100000262	5509	2	62.467063			
100000262	5509	3	61.939413			
100000262	5509	4	66.879861			
100000262	5509	5	58.610931			
100000262	5509	6	57.154288			
100000262	5509	7	64.468765			
100000262	5509	8	61.97672			
100000262	5509	9	61.653343			
100000262	5509	10	58.717996			
100000262	5511	1	135.280848	BUSH RIVER RD	W	DUTCH SQUARE ENTRANCE
100000262	5511	2	110.957963			
100000262	5511	3	173.772013			
100000262	5511	4	156.681666			
100000262	5511	5	188.3159			
100000262	5511	6	327.796693			
100000262	5511	7	88.409889			
100000262	5511	8	264.697965			
100000262	5511	9	94.804601			
100000262	5511	10	130.812069			
100000263	5516	1	110.108934	COLONIAL LIFE BLVD W	N	COLONIAL LIFE BLVD W
100000263	5516	2	74.427869			
100000263	5516	3	44.015846			
100000263	5516	4	83.392979			
100000263	5516	5	102.360837			
100000263	5516	6	113.309579			
100000263	5516	7	95.696665			
100000263	5516	8	90.755525			
100000263	5516	9	61.598929			
100000263	5516	10	63.953251			
100000263	5520	1	296.367536	COLONIAL LIFE BLVD W	W	COLONIAL LIFE BLVD W
100000263	5520	2	242.906706			
100000263	5520	3	154.319552			
100000263	5520	4	152.916129			
100000263	5520	5	145.69076			
100000263	5520	6	530.01237			
100000263	5520	7	157.921871			
100000263	5520	8	507.501345			
100000263	5520	9	213.312144			
100000263	5520	10	148.62423			
100000263	6495	1	3.433487	COLONIAL LIFE BLVD W	S	COLONIAL LIFE BLVD W
100000263	6495	2	3.115676			
100000263	6495	3	2.791206			
100000263	6495	4	2.325229			
100000263	6495	5	5.101573			
100000263	6495	6	3.796529			
100000263	6495	7	3.0693			
100000263	6495	8	5.57489			
100000263	6495	9	4.362085			
100000263	6495	10	3.672439			
100000265	5139	1	10.074593	GREYSTONE BLVD	N	GREYSTONE BLVD & STONERIDGE DR
100000265	5139	2	10.849279			
100000265	5139	3	11.05101			
100000265	5139	4	10.650698			
100000265	5139	5	11.222209			
100000265	5139	6	11.100674			
100000265	5139	7	11.219843			
100000265	5139	8	11.721181			
100000265	5139	9	10.51282			
100000265	5139	10	9.866588			
100000265	5537	1	52.550051	STONERIDGE DR	W	GREYSTONE BLVD & STONERIDGE DR
100000265	5537	2	51.799171			
100000265	5537	3	35.214321			

Node	Superlink	Run	Average Control Delay	Approach Street Name	Direction	Intersection
100000265	5537	4	32.945854			
100000265	5537	5	43.371588			
100000265	5537	6	46.802654			
100000265	5537	7	40.983668			
100000265	5537	8	52.235286			
100000265	5537	9	42.968277			
100000265	5537	10	39.131675			
100000265	5556	1	14.852751	STONERIDGE DR	E	GREYSTONE BLVD & STONERIDGE DR
100000265	5556	2	14.245685			
100000265	5556	3	14.765716			
100000265	5556	4	14.670313			
100000265	5556	5	16.15582			
100000265	5556	6	16.09105			
100000265	5556	7	15.566491			
100000265	5556	8	15.980675			
100000265	5556	9	16.476763			
100000265	5556	10	14.37681			
100000265	6328	1	19.234694	GREYSTONE BLVD	S	GREYSTONE BLVD & STONERIDGE DR
100000265	6328	2	17.462946			
100000265	6328	3	14.880701			
100000265	6328	4	19.785645			
100000265	6328	5	17.05209			
100000265	6328	6	18.132195			
100000265	6328	7	16.840091			
100000265	6328	8	16.530518			
100000265	6328	9	14.948771			
100000265	6328	10	18.366037			
100000266	5545	1	53.700767	GREYSTONE BLVD	N	GREYSTONE BLVD & BROAD RIVER RD
100000266	5545	2	36.580832			
100000266	5545	3	31.271666			
100000266	5545	4	39.031731			
100000266	5545	5	28.066323			
100000266	5545	6	35.224583			
100000266	5545	7	29.618899			
100000266	5545	8	30.597625			
100000266	5545	9	48.296012			
100000266	5545	10	32.758626			
100000266	6325	1	21.991704	BROAD RIVER RD	W	GREYSTONE BLVD & BROAD RIVER RD
100000266	6325	2	11.525455			
100000266	6325	3	12.284809			
100000266	6325	4	14.737524			
100000266	6325	5	10.761045			
100000266	6325	6	14.106632			
100000266	6325	7	7.971457			
100000266	6325	8	12.377664			
100000266	6325	9	21.738628			
100000266	6325	10	12.935902			
100000266	6327	1	16.291433	BROAD RIVER RD	E	GREYSTONE BLVD & BROAD RIVER RD
100000266	6327	2	15.674388			
100000266	6327	3	17.033771			
100000266	6327	4	16.489057			
100000266	6327	5	15.378405			
100000266	6327	6	16.789557			
100000266	6327	7	15.2555			
100000266	6327	8	15.57312			
100000266	6327	9	18.429121			
100000266	6327	10	15.689339			
100000268	5565	1	42.666358	HUGER ST	N	HUGER ST & LAUREL ST
100000268	5565	2	41.519445			
100000268	5565	3	38.934397			
100000268	5565	4	43.470159			
100000268	5565	5	41.696895			
100000268	5565	6	62.057275			
100000268	5565	7	38.290487			
100000268	5565	8	54.6922			
100000268	5565	9	45.605417			
100000268	5565	10	44.992983			
100000268	5570	1		LAUREL ST	E	HUGER ST & LAUREL ST
100000268	5570	2				
100000268	5570	3				
100000268	5570	4				
100000268	5570	5				
100000268	5570	6				
100000268	5570	7				
100000268	5570	8				
100000268	5570	9				
100000268	5570	10				
100000268	5571	1	9.788686	HUGER ST	S	HUGER ST & LAUREL ST
100000268	5571	2	10.178701			
100000268	5571	3	9.536395			
100000268	5571	4	9.860233			
100000268	5571	5	8.739899			
100000268	5571	6	10.8506			
100000268	5571	7	9.483145			
100000268	5571	8	10.409257			
100000268	5571	9	9.071154			
100000268	5571	10	9.870386			
100000268	5581	1	43.688217	LAUREL ST	W	HUGER ST & LAUREL ST
100000268	5581	2	50.260696			
100000268	5581	3	48.069793			
100000268	5581	4	47.389146			
100000268	5581	5	47.718263			
100000268	5581	6	44.831576			
100000268	5581	7	50.367444			
100000268	5581	8	45.214229			
100000268	5581	9	48.720469			
100000268	5581	10	42.422322			
100000339	6083	1	19.329173	BROAD RIVER RD	NW	BROAD RIVER RD & ST ANDREWS RD
100000339	6083	2	15.494796			
100000339	6083	3	16.149357			
100000339	6083	4	18.304695			
100000339	6083	5	17.84119			
100000339	6083	6	15.508296			
100000339	6083	7	19.034551			
100000339	6083	8	14.683456			
100000339	6083	9	19.178012			
100000339	6083	10	16.476149			
100000339	6084	1	46.194648	BROAD RIVER RD	SE	BROAD RIVER RD & ST ANDREWS RD
100000339	6084	2	28.811344			
100000339	6084	3	27.863583			

Node	Superlink	Run	Average Control Delay	Approach Street Name	Direction	Intersection
100000339	6084	4	32.483346			
100000339	6084	5	33.122985			
100000339	6084	6	32.646331			
100000339	6084	7	29.463451			
100000339	6084	8	27.694332			
100000339	6084	9	80.164081			
100000339	6084	10	29.631021			
100000339	6085	1	115.308891	ST ANDREWS RD	SW	BROAD RIVER RD & ST ANDREWS RD
100000339	6085	2	127.233146			
100000339	6085	3	91.112067			
100000339	6085	4	83.707545			
100000339	6085	5	95.814843			
100000339	6085	6	167.060421			
100000339	6085	7	84.124184			
100000339	6085	8	83.001413			
100000339	6085	9	94.178428			
100000339	6085	10	102.285671			
100000339	6086	1	38.488991	ST ANDREWS RD	E	BROAD RIVER RD & ST ANDREWS RD
100000339	6086	2	39.87562			
100000339	6086	3	39.704236			
100000339	6086	4	40.119836			
100000339	6086	5	36.377013			
100000339	6086	6	38.85762			
100000339	6086	7	34.063381			
100000339	6086	8	43.576543			
100000339	6086	9	55.641339			
100000339	6086	10	37.308766			
100000343	6059	1	0	BROAD RIVER RD	NW	NUNAMAKER DR & BROAD RIVER RD
100000343	6059	2	0			
100000343	6059	3	0			
100000343	6059	4	0			
100000343	6059	5	0			
100000343	6059	6	0			
100000343	6059	7	0			
100000343	6059	8	0			
100000343	6059	9	0			
100000343	6059	10	0			
100000343	6063	1		NUNAMAKER DR	SW	NUNAMAKER DR & BROAD RIVER RD
100000343	6063	2				
100000343	6063	3				
100000343	6063	4				
100000343	6063	5				
100000343	6063	6				
100000343	6063	7				
100000343	6063	8				
100000343	6063	9				
100000343	6063	10				
100000343	6065	1	0.011339	BROAD RIVER RD	SE	NUNAMAKER DR & BROAD RIVER RD
100000343	6065	2	0.005226			
100000343	6065	3	0.005491			
100000343	6065	4	0.003657			
100000343	6065	5	0.006023			
100000343	6065	6	0.003662			
100000343	6065	7	0.001488			
100000343	6065	8	0.004588			
100000343	6065	9	0.007075			
100000343	6065	10	0.003686			
100000344	6065	1	91.875692	BROAD RIVER RD	NW	YOUNG DR
100000344	6065	2	59.867326			
100000344	6065	3	50.015167			
100000344	6065	4	64.25357			
100000344	6065	5	50.476139			
100000344	6065	6	61.196712			
100000344	6065	7	46.288763			
100000344	6065	8	51.21792			
100000344	6065	9	86.382718			
100000344	6065	10	57.259324			
100000344	6066	1	169.909107	BROAD RIVER RD	SE	YOUNG DR
100000344	6066	2	68.044574			
100000344	6066	3	14.61084			
100000344	6066	4	117.027229			
100000344	6066	5	24.533013			
100000344	6066	6	43.475248			
100000344	6066	7	37.928529			
100000344	6066	8	32.422755			
100000344	6066	9	157.130087			
100000344	6066	10	23.410686			
100000344	6067	1	241.649051	YOUNG DR	SW	YOUNG DR
100000344	6067	2	219.34			
100000344	6067	3	215.49614			
100000344	6067	4	255.558095			
100000344	6067	5	232.948287			
100000344	6067	6	229.402223			
100000344	6067	7	258.547901			
100000344	6067	8	223.545344			
100000344	6067	9	234.21875			
100000344	6067	10	234.94873			
100000344	6068	1	183.536531	SEMINOLE RD	NE	YOUNG DR
100000344	6068	2	183.595638			
100000344	6068	3	190.26818			
100000344	6068	4	204.08394			
100000344	6068	5	198.761577			
100000344	6068	6	201.326586			
100000344	6068	7	189.565487			
100000344	6068	8	200.186359			
100000344	6068	9	193.919605			
100000344	6068	10	196.425094			
100000348	5116	1	9.482846	ST ANDREWS RD	NW	ST ANDREWS RD & JAMIL RD
100000348	5116	2	10.10288			
100000348	5116	3	9.145591			
100000348	5116	4	9.739689			
100000348	5116	5	9.762419			
100000348	5116	6	9.25475			
100000348	5116	7	11.218907			
100000348	5116	8	9.908131			
100000348	5116	9	9.505371			
100000348	5116	10	10.17475			
100000348	6114	1	23.183142	ST ANDREWS RD	E	ST ANDREWS RD & JAMIL RD
100000348	6114	2	12.497881			
100000348	6114	3	16.441818			

Node	Superlink	Run	Average Control Delay	Approach Street Name	Direction	Intersection
100000348	6114	4	14.228808			
100000348	6114	5	25.444783			
100000348	6114	6	10.703131			
100000348	6114	7	10.527527			
100000348	6114	8	9.079405			
100000348	6114	9	9.897676			
100000348	6114	10	11.96742			
100000348	6119	1	29.523582	JAMIL RD	S	ST ANDREWS RD & JAMIL RD
100000348	6119	2	29.184051			
100000348	6119	3	26.76046			
100000348	6119	4	28.477919			
100000348	6119	5	26.929164			
100000348	6119	6	30.713063			
100000348	6119	7	29.859856			
100000348	6119	8	28.678286			
100000348	6119	9	28.333173			
100000348	6119	10	29.5922			
100000349	6066	1	9.697053	BROAD RIVER RD	NW	ST ANDREWS PKY & BROAD RIVER RD
100000349	6066	2	5.782836			
100000349	6066	3	4.662906			
100000349	6066	4	7.709224			
100000349	6066	5	4.034279			
100000349	6066	6	5.057174			
100000349	6066	7	4.225031			
100000349	6066	8	4.878641			
100000349	6066	9	10.317871			
100000349	6066	10	5.643374			
100000349	6078	1	228.420003	ST ANDREWS PKY	SW	ST ANDREWS PKY & BROAD RIVER RD
100000349	6078	2	67.96294			
100000349	6078	3	79.109686			
100000349	6078	4	159.212909			
100000349	6078	5	62.394013			
100000349	6078	6	70.830874			
100000349	6078	7	60.941785			
100000349	6078	8	75.286384			
100000349	6078	9	216.807789			
100000349	6078	10	59.59161			
100000349	6079	1	167.941315	BROAD RIVER RD	NE	ST ANDREWS PKY & BROAD RIVER RD
100000349	6079	2	18.75794			
100000349	6079	3	16.589172			
100000349	6079	4	42.64099			
100000349	6079	5	17.357709			
100000349	6079	6	22.309299			
100000349	6079	7	17.661368			
100000349	6079	8	19.595185			
100000349	6079	9	79.446468			
100000349	6079	10	20.215143			
100000349	6083	1	63.095358	BROAD RIVER RD	SE	ST ANDREWS PKY & BROAD RIVER RD
100000349	6083	2	4.142362			
100000349	6083	3	3.766375			
100000349	6083	4	18.165244			
100000349	6083	5	3.991237			
100000349	6083	6	4.563041			
100000349	6083	7	3.808965			
100000349	6083	8	3.829373			
100000349	6083	9	60.544041			
100000349	6083	10	3.351918			
100000353	5104	1	17.264434	PINEY GROVE RD	W	BOWER PKY
100000353	5104	2	18.057024			
100000353	5104	3	18.552266			
100000353	5104	4	16.475371			
100000353	5104	5	17.496795			
100000353	5104	6	20.864099			
100000353	5104	7	19.090091			
100000353	5104	8	18.698944			
100000353	5104	9	14.799581			
100000353	5104	10	18.944585			
100000353	6125	1	46.727551	BOWER PKY	SE	BOWER PKY
100000353	6125	2	51.254415			
100000353	6125	3	48.92275			
100000353	6125	4	47.570347			
100000353	6125	5	45.627413			
100000353	6125	6	44.745566			
100000353	6125	7	49.83779			
100000353	6125	8	46.938196			
100000353	6125	9	52.302283			
100000353	6125	10	47.585449			
100000353	6126	1	31.271977	PINEY GROVE RD	E	BOWER PKY
100000353	6126	2	30.540541			
100000353	6126	3	36.533556			
100000353	6126	4	33.025752			
100000353	6126	5	30.194437			
100000353	6126	6	30.525825			
100000353	6126	7	31.387778			
100000353	6126	8	30.537938			
100000353	6126	9	33.249549			
100000353	6126	10	32.076706			
100000353	6127	1	72.418624	JAMIL RD	NW	BOWER PKY
100000353	6127	2	76.436101			
100000353	6127	3	52.888279			
100000353	6127	4	99.212059			
100000353	6127	5	68.748043			
100000353	6127	6	55.345297			
100000353	6127	7	53.206203			
100000353	6127	8	95.049706			
100000353	6127	9	94.474163			
100000353	6127	10	56.018887			
100000354	6095	1	36.263757	ST ANDREWS RD	SW	ST ANDREWS RD
100000354	6095	2	38.276591			
100000354	6095	3	33.415361			
100000354	6095	4	56.322802			
100000354	6095	5	44.042239			
100000354	6095	6	42.132134			
100000354	6095	7	40.723102			
100000354	6095	8	32.561154			
100000354	6095	9	42.659822			
100000354	6095	10	26.684427			
100000354	6096	1	12.118827	ST ANDREWS RD	NE	ST ANDREWS RD
100000354	6096	2	11.790691			
100000354	6096	3	10.705436			

Node	Superlink	Run	Average Control Delay	Approach Street Name	Direction	Intersection
100000354	6096	4	12.983268			
100000354	6096	5	10.694164			
100000354	6096	6	11.32454			
100000354	6096	7	9.986917			
100000354	6096	8	8.945211			
100000354	6096	9	10.131261			
100000354	6096	10	10.41444			
100000354	6098	1	85.380531	CHARTWELL RD	NW	ST ANDREWS RD
100000354	6098	2	91.001871			
100000354	6098	3	70.351806			
100000354	6098	4	51.746246			
100000354	6098	5	62.411257			
100000354	6098	6	77.859948			
100000354	6098	7	39.932972			
100000354	6098	8	49.723328			
100000354	6098	9	54.361693			
100000354	6098	10	64.857291			
100000354	6099	1	79.950299	KAY ST	SE	ST ANDREWS RD
100000354	6099	2	146.045103			
100000354	6099	3	99.2896			
100000354	6099	4	213.097108			
100000354	6099	5	121.018856			
100000354	6099	6	82.182512			
100000354	6099	7	96.563891			
100000354	6099	8	106.054146			
100000354	6099	9	82.052044			
100000354	6099	10	65.229869			
100000356	6086	1	0.424637	ST ANDREWS RD	SW	LAWRENCE ST & ST ANDREWS RD
100000356	6086	2	0.505802			
100000356	6086	3	0.424108			
100000356	6086	4	0.455891			
100000356	6086	5	0.51592			
100000356	6086	6	0.412192			
100000356	6086	7	0.453969			
100000356	6086	8	0.419666			
100000356	6086	9	0.422831			
100000356	6086	10	0.534221			
100000356	6092	1	13.773156	LAWRENCE ST	SE	LAWRENCE ST & ST ANDREWS RD
100000356	6092	2	14.49343			
100000356	6092	3	11.549076			
100000356	6092	4	12.404131			
100000356	6092	5	12.242198			
100000356	6092	6	12.620386			
100000356	6092	7	11.877908			
100000356	6092	8	11.121954			
100000356	6092	9	11.783244			
100000356	6092	10	12.508177			
100000356	6094	1	3.219495	ST ANDREWS RD	NE	LAWRENCE ST & ST ANDREWS RD
100000356	6094	2	3.06645			
100000356	6094	3	3.039084			
100000356	6094	4	2.873805			
100000356	6094	5	2.581034			
100000356	6094	6	3.33937			
100000356	6094	7	3.346846			
100000356	6094	8	2.74291			
100000356	6094	9	2.467354			
100000356	6094	10	2.858562			
100000357	6119	1	1.958327	JAMIL RD	NW	JAMIL RD & PAISLEY LN
100000357	6119	2	1.742462			
100000357	6119	3	2.220519			
100000357	6119	4	2.303426			
100000357	6119	5	1.964486			
100000357	6119	6	2.270377			
100000357	6119	7	2.454194			
100000357	6119	8	1.904984			
100000357	6119	9	2.256065			
100000357	6119	10	2.350619			
100000357	6120	1	135.239628	PAISLEY LN	NE	JAMIL RD & PAISLEY LN
100000357	6120	2	144.629909			
100000357	6120	3	124.993263			
100000357	6120	4	150.152063			
100000357	6120	5	142.597842			
100000357	6120	6	144.111976			
100000357	6120	7	131.167757			
100000357	6120	8	107.950292			
100000357	6120	9	136.162278			
100000357	6120	10	156.473007			
100000357	6121	1	0.977572	JAMIL RD	SE	JAMIL RD & PAISLEY LN
100000357	6121	2	1.827326			
100000357	6121	3	1.58556			
100000357	6121	4	1.674193			
100000357	6121	5	1.484833			
100000357	6121	6	1.802836			
100000357	6121	7	1.31771			
100000357	6121	8	1.444999			
100000357	6121	9	0.997359			
100000357	6121	10	1.577878			
100000358	5117	1	15.922238	ST ANDREWS RD	NE	ST ANDREWS RD
100000358	5117	2	15.772236			
100000358	5117	3	16.264719			
100000358	5117	4	14.388568			
100000358	5117	5	15.667173			
100000358	5117	6	16.091746			
100000358	5117	7	16.010683			
100000358	5117	8	14.933532			
100000358	5117	9	15.786089			
100000358	5117	10	16.346372			
100000358	6100	1	23.819197	ST ANDREWS RD	SW	ST ANDREWS RD
100000358	6100	2	24.05745			
100000358	6100	3	24.569344			
100000358	6100	4	25.339489			
100000358	6100	5	24.614569			
100000358	6100	6	24.03756			
100000358	6100	7	24.327609			
100000358	6100	8	24.209519			
100000358	6100	9	23.892255			
100000358	6100	10	22.948967			
100000358	6101	1	48.466864	BURNING TREE RD	NW	ST ANDREWS RD
100000358	6101	2	54.500947			
100000358	6101	3	54.159458			

Node	Superlink	Run	Average Control Delay	Approach Street Name	Direction	Intersection
100000358	6101	4	56.257753			
100000358	6101	5	51.87666			
100000358	6101	6	51.57036			
100000358	6101	7	53.698802			
100000358	6101	8	55.273269			
100000358	6101	9	57.132889			
100000358	6101	10	53.846174			
100000358	6102	1	63.019105	FERNANDINA RD	SE	ST ANDREWS RD
100000358	6102	2	73.496127			
100000358	6102	3	65.136865			
100000358	6102	4	65.066046			
100000358	6102	5	67.880609			
100000358	6102	6	62.122396			
100000358	6102	7	65.661815			
100000358	6102	8	67.033337			
100000358	6102	9	70.655945			
100000358	6102	10	67.267927			
100000360	3294	1	19.523624	EXIT 106 WB OFF RAMP	NE	EXIT 106 WB OFF RAMP & BURNING TREE RD
100000360	3294	2	29.1493			
100000360	3294	3	27.894612			
100000360	3294	4	43.892191			
100000360	3294	5	25.705761			
100000360	3294	6	34.710116			
100000360	3294	7	28.363291			
100000360	3294	8	23.706042			
100000360	3294	9	34.342564			
100000360	3294	10	37.538248			
100000360	6101	1	0.05996	BURNING TREE RD	S	EXIT 106 WB OFF RAMP & BURNING TREE RD
100000360	6101	2	0.071173			
100000360	6101	3	0.033093			
100000360	6101	4	0.110237			
100000360	6101	5	0.030353			
100000360	6101	6	0.116908			
100000360	6101	7	0.118897			
100000360	6101	8	0.081865			
100000360	6101	9	0.126536			
100000360	6101	10	0.056213			
100000360	6105	1	0.001445	BURNING TREE RD	N	EXIT 106 WB OFF RAMP & BURNING TREE RD
100000360	6105	2	0			
100000360	6105	3	0			
100000360	6105	4	0.058751			
100000360	6105	5	0.001613			
100000360	6105	6	0.000962			
100000360	6105	7	0			
100000360	6105	8	0			
100000360	6105	9	0			
100000360	6105	10	0			
100000362	6134	1	27.680433	JAMIL RD	NW	HARBISON BLVD & JAMIL RD
100000362	6134	2	19.440376			
100000362	6134	3	20.615707			
100000362	6134	4	26.284473			
100000362	6134	5	27.041353			
100000362	6134	6	18.673197			
100000362	6134	7	26.075238			
100000362	6134	8	20.058411			
100000362	6134	9	23.996569			
100000362	6134	10	24.29209			
100000362	6137	1	2.336291	HARBISON BLVD	NE	HARBISON BLVD & JAMIL RD
100000362	6137	2	1.272882			
100000362	6137	3	1.770003			
100000362	6137	4	1.886447			
100000362	6137	5	2.446736			
100000362	6137	6	2.229839			
100000362	6137	7	1.96893			
100000362	6137	8	1.767058			
100000362	6137	9	2.095432			
100000362	6137	10	2.54197			
100000362	6473	1	0.031242	HARBISON BLVD	SW	HARBISON BLVD & JAMIL RD
100000362	6473	2	0.002029			
100000362	6473	3	0.001525			
100000362	6473	4	0.004941			
100000362	6473	5	0.001616			
100000362	6473	6	0.003928			
100000362	6473	7	0.015848			
100000362	6473	8	0.027553			
100000362	6473	9	0.007354			
100000362	6473	10	0.019023			
100000363	6125	1	0.852925	BOWER PKY	NW	BOWER PKY & JAMIL RD
100000363	6125	2	0.926125			
100000363	6125	3	0.892622			
100000363	6125	4	0.696893			
100000363	6125	5	0.849486			
100000363	6125	6	0.839957			
100000363	6125	7	0.603351			
100000363	6125	8	0.895025			
100000363	6125	9	0.747995			
100000363	6125	10	0.627288			
100000363	6134	1	32.18015	JAMIL RD	SW	BOWER PKY & JAMIL RD
100000363	6134	2	84.762621			
100000363	6134	3	115.632542			
100000363	6134	4	170.495102			
100000363	6134	5	103.216398			
100000363	6134	6	167.480201			
100000363	6134	7	68.630331			
100000363	6134	8	78.654817			
100000363	6134	9	75.259094			
100000363	6134	10	174.53691			
100000363	6160	1	0.402131	BOWER PKY	SE	BOWER PKY & JAMIL RD
100000363	6160	2	0.554008			
100000363	6160	3	0.617771			
100000363	6160	4	0.647661			
100000363	6160	5	0.654846			
100000363	6160	6	0.653412			
100000363	6160	7	0.675759			
100000363	6160	8	0.722004			
100000363	6160	9	0.597858			
100000363	6160	10	0.569381			
100000364	6145	1	4.688908	HARBISON BLVD	SW	HARBISON BLVD & COLUMBIANA DR
100000364	6145	2	3.787072			
100000364	6145	3	3.807328			

Node	Superlink	Run	Average Control Delay	Approach Street Name	Direction	Intersection
100000364	6145	4	4.211205			
100000364	6145	5	5.905064			
100000364	6145	6	4.544429			
100000364	6145	7	3.78783			
100000364	6145	8	3.966226			
100000364	6145	9	5.855563			
100000364	6145	10	4.559245			
100000364	6176	1	3.63455	HARBISON BLVD	NE	HARBISON BLVD & COLUMBIANA DR
100000364	6176	2	3.162258			
100000364	6176	3	4.054898			
100000364	6176	4	3.380817			
100000364	6176	5	4.370288			
100000364	6176	6	4.042875			
100000364	6176	7	3.372895			
100000364	6176	8	3.394463			
100000364	6176	9	4.053184			
100000364	6176	10	3.547051			
100000364	6177	1		COLUMBIANA DR	NW	HARBISON BLVD & COLUMBIANA DR
100000364	6177	2				
100000364	6177	3				
100000364	6177	4				
100000364	6177	5				
100000364	6177	6				
100000364	6177	7				
100000364	6177	8				
100000364	6177	9				
100000364	6177	10				
100000364	6196	1	52.94263	COLUMBIANA DR	SE	HARBISON BLVD & COLUMBIANA DR
100000364	6196	2	48.087481			
100000364	6196	3	57.581804			
100000364	6196	4	50.795924			
100000364	6196	5	55.102459			
100000364	6196	6	56.716844			
100000364	6196	7	60.528465			
100000364	6196	8	59.453752			
100000364	6196	9	58.688731			
100000364	6196	10	61.406766			
100000365	6137	1	13.203983	HARBISON BLVD	SW	COLUMBIANA CIR
100000365	6137	2	11.602367			
100000365	6137	3	12.111962			
100000365	6137	4	12.613886			
100000365	6137	5	13.638338			
100000365	6137	6	11.652424			
100000365	6137	7	11.958426			
100000365	6137	8	11.336534			
100000365	6137	9	11.169383			
100000365	6137	10	11.756064			
100000365	6140	1	50.18792	COLUMBIANA CIR	SE	COLUMBIANA CIR
100000365	6140	2	55.331824			
100000365	6140	3	53.943895			
100000365	6140	4	47.280924			
100000365	6140	5	49.739359			
100000365	6140	6	49.667216			
100000365	6140	7	49.810762			
100000365	6140	8	48.337491			
100000365	6140	9	50.537625			
100000365	6140	10	46.392489			
100000365	6145	1	12.31723	HARBISON BLVD	NE	COLUMBIANA CIR
100000365	6145	2	13.434552			
100000365	6145	3	14.741017			
100000365	6145	4	13.694031			
100000365	6145	5	14.619515			
100000365	6145	6	14.995969			
100000365	6145	7	14.747327			
100000365	6145	8	12.630679			
100000365	6145	9	12.521611			
100000365	6145	10	13.151183			
100000365	6151	1	46.50099	PARK TERRACE DR	NW	COLUMBIANA CIR
100000365	6151	2	49.499719			
100000365	6151	3	43.211567			
100000365	6151	4	44.116703			
100000365	6151	5	49.135022			
100000365	6151	6	47.867873			
100000365	6151	7	44.853137			
100000365	6151	8	46.9753			
100000365	6151	9	51.743484			
100000365	6151	10	47.946377			
100000374	6151	1	62.55521	PARK TERRACE DR	S	BOWER PKY
100000374	6151	2	60.121349			
100000374	6151	3	125.634784			
100000374	6151	4	61.640339			
100000374	6151	5	82.621582			
100000374	6151	6	62.336349			
100000374	6151	7	59.776289			
100000374	6151	8	101.258125			
100000374	6151	9	53.842226			
100000374	6151	10	110.427701			
100000374	6160	1	15.939664	BOWER PKY	W	BOWER PKY
100000374	6160	2	18.079019			
100000374	6160	3	20.61072			
100000374	6160	4	17.265118			
100000374	6160	5	17.44128			
100000374	6160	6	17.735538			
100000374	6160	7	16.048419			
100000374	6160	8	19.025119			
100000374	6160	9	18.155013			
100000374	6160	10	20.097702			
100000374	6161	1	4.068136		N	BOWER PKY
100000374	6161	2	4.678533			
100000374	6161	3	4.95413			
100000374	6161	4	4.774969			
100000374	6161	5	4.76342			
100000374	6161	6	4.676352			
100000374	6161	7	4.89041			
100000374	6161	8	4.392767			
100000374	6161	9	4.446016			
100000374	6161	10	4.629128			
100000374	6162	1		BOWER PKY	E	BOWER PKY
100000374	6162	2				
100000374	6162	3				

Node	Superlink	Run	Average Control Delay	Approach Street Name	Direction	Intersection
100000374	6162	4				
100000374	6162	5				
100000374	6162	6				
100000374	6162	7				
100000374	6162	8				
100000374	6162	9				
100000374	6162	10				
100000375	6196	1	7.140992	COLUMBIANA DR	NW	COLUMBIANA DR
100000375	6196	2	5.306438			
100000375	6196	3	4.760089			
100000375	6196	4	5.861034			
100000375	6196	5	5.775858			
100000375	6196	6	4.600195			
100000375	6196	7	5.209983			
100000375	6196	8	6.798682			
100000375	6196	9	4.944456			
100000375	6196	10	6.44107			
100000375	6204	1	6.219628	COLUMBIANA DR	SE	COLUMBIANA DR
100000375	6204	2	6.839032			
100000375	6204	3	5.110575			
100000375	6204	4	5.405997			
100000375	6204	5	5.19839			
100000375	6204	6	6.979317			
100000375	6204	7	5.974926			
100000375	6204	8	6.149025			
100000375	6204	9	4.97235			
100000375	6204	10	5.327594			
100000375	6550	1	26.43922	CROSSBOW DR	NE	COLUMBIANA DR
100000375	6550	2	25.380341			
100000375	6550	3	27.33934			
100000375	6550	4	25.1496			
100000375	6550	5	26.066844			
100000375	6550	6	25.352186			
100000375	6550	7	24.496665			
100000375	6550	8	23.304543			
100000375	6550	9	24.58405			
100000375	6550	10	26.395885			
100000375	6551	1	6.686465	DRIVEWAY	SW	COLUMBIANA DR
100000375	6551	2	7.476503			
100000375	6551	3	6.720585			
100000375	6551	4	7.002452			
100000375	6551	5	6.403263			
100000375	6551	6	6.438743			
100000375	6551	7	5.924268			
100000375	6551	8	5.96433			
100000375	6551	9	6.364067			
100000375	6551	10	6.397175			
100000391	5071	1	5.346575	BROAD RIVER RD	NW	BROAD RIVER RD & COLUMBIANA DR
100000391	5071	2	5.88586			
100000391	5071	3	5.449567			
100000391	5071	4	5.478072			
100000391	5071	5	5.838297			
100000391	5071	6	5.425886			
100000391	5071	7	5.162076			
100000391	5071	8	4.888623			
100000391	5071	9	5.304318			
100000391	5071	10	5.204499			
100000391	6214	1	53.655072	COLUMBIANA DR	NE	BROAD RIVER RD & COLUMBIANA DR
100000391	6214	2	49.696272			
100000391	6214	3	51.203035			
100000391	6214	4	43.586481			
100000391	6214	5	40.294768			
100000391	6214	6	46.157257			
100000391	6214	7	46.757689			
100000391	6214	8	46.614689			
100000391	6214	9	44.684781			
100000391	6214	10	49.823858			
100000391	6224	1	9.237649	BROAD RIVER RD	SE	BROAD RIVER RD & COLUMBIANA DR
100000391	6224	2	10.826797			
100000391	6224	3	7.754543			
100000391	6224	4	9.078724			
100000391	6224	5	8.934479			
100000391	6224	6	8.453379			
100000391	6224	7	9.880504			
100000391	6224	8	8.893354			
100000391	6224	9	9.608322			
100000391	6224	10	9.532495			
100000392	6121	1	0.461117	JAMIL RD	NW	TRAM RD & JAMIL RD
100000392	6121	2	1.171427			
100000392	6121	3	0.495238			
100000392	6121	4	0.955821			
100000392	6121	5	0.798865			
100000392	6121	6	1.041239			
100000392	6121	7	0.523173			
100000392	6121	8	1.295188			
100000392	6121	9	1.032704			
100000392	6121	10	0.718415			
100000392	6127	1	0.221275	JAMIL RD	SE	TRAM RD & JAMIL RD
100000392	6127	2	0.543082			
100000392	6127	3	0.736795			
100000392	6127	4	0.353627			
100000392	6127	5	0.242276			
100000392	6127	6	0.254465			
100000392	6127	7	0.377608			
100000392	6127	8	0.693335			
100000392	6127	9	0.493856			
100000392	6127	10	0.134253			
100000392	6261	1	9.841201	TRAM RD	NE	TRAM RD & JAMIL RD
100000392	6261	2	9.893968			
100000392	6261	3	9.405133			
100000392	6261	4	9.547131			
100000392	6261	5	10.177608			
100000392	6261	6	9.67856			
100000392	6261	7	10.985226			
100000392	6261	8	9.636672			
100000392	6261	9	11.11332			
100000392	6261	10	8.736093			
100000394	6204	1	0	COLUMBIANA DR	NW	COLUMBIANA DR
100000394	6204	2	0			
100000394	6204	3	0			

Node	Superlink	Run	Average Control Delay	Approach Street Name	Direction	Intersection
100000394	6204	4	0			
100000394	6204	5	0			
100000394	6204	6	0			
100000394	6204	7	0			
100000394	6204	8	0			
100000394	6204	9	0			
100000394	6204	10	0			
100000394	6208	1	0	COLUMBIANA DR	SE	COLUMBIANA DR
100000394	6208	2	0			
100000394	6208	3	0			
100000394	6208	4	0			
100000394	6208	5	0			
100000394	6208	6	0			
100000394	6208	7	0			
100000394	6208	8	0			
100000394	6208	9	0			
100000394	6208	10	0			
100000394	6210	1		COLUMBIA AVE	NE	COLUMBIANA DR
100000394	6210	2				
100000394	6210	3				
100000394	6210	4				
100000394	6210	5				
100000394	6210	6				
100000394	6210	7				
100000394	6210	8				
100000394	6210	9				
100000394	6210	10				
100000394	6549	1		DRIVEWAY	SW	COLUMBIANA DR
100000394	6549	2				
100000394	6549	3				
100000394	6549	4				
100000394	6549	5				
100000394	6549	6				
100000394	6549	7				
100000394	6549	8				
100000394	6549	9				
100000394	6549	10				
100000395	5084	1	148.477113	LAKE MURRAY BLVD	W	LAKE MURRAY BLVD & COLUMBIANA DR
100000395	5084	2	157.940156			
100000395	5084	3	137.722611			
100000395	5084	4	154.181792			
100000395	5084	5	148.082873			
100000395	5084	6	148.199924			
100000395	5084	7	143.382647			
100000395	5084	8	134.13417			
100000395	5084	9	146.695231			
100000395	5084	10	153.823611			
100000395	6208	1	226.293265	COLUMBIANA DR	NW	LAKE MURRAY BLVD & COLUMBIANA DR
100000395	6208	2	215.077443			
100000395	6208	3	228.345893			
100000395	6208	4	242.922844			
100000395	6208	5	240.730057			
100000395	6208	6	237.819709			
100000395	6208	7	228.1652			
100000395	6208	8	236.114704			
100000395	6208	9	230.078008			
100000395	6208	10	230.776338			
100000395	6214	1	30.773517	COLUMBIANA DR	S	LAKE MURRAY BLVD & COLUMBIANA DR
100000395	6214	2	33.098052			
100000395	6214	3	33.591853			
100000395	6214	4	42.12616			
100000395	6214	5	24.581929			
100000395	6214	6	30.931097			
100000395	6214	7	38.095421			
100000395	6214	8	26.101513			
100000395	6214	9	33.798421			
100000395	6214	10	31.742881			
100000395	6215	1	178.002402	LAKE MURRAY BLVD	E	LAKE MURRAY BLVD & COLUMBIANA DR
100000395	6215	2	141.419164			
100000395	6215	3	150.398781			
100000395	6215	4	161.908375			
100000395	6215	5	159.369554			
100000395	6215	6	131.612835			
100000395	6215	7	179.357751			
100000395	6215	8	169.764485			
100000395	6215	9	183.574476			
100000395	6215	10	156.224985			
100000398	5101	1	0.209441	HARBISON BLVD	W	HARBISON BLVD & PARKRIDGE DR
100000398	5101	2	0.244491			
100000398	5101	3	0.141102			
100000398	5101	4	0.23922			
100000398	5101	5	0.263118			
100000398	5101	6	0.158352			
100000398	5101	7	0.249222			
100000398	5101	8	0.246215			
100000398	5101	9	0.180925			
100000398	5101	10	0.200043			
100000398	6267	1	7.964026	PARKRIDGE DR	SE	HARBISON BLVD & PARKRIDGE DR
100000398	6267	2	10.211186			
100000398	6267	3	9.87132			
100000398	6267	4	8.505805			
100000398	6267	5	8.518371			
100000398	6267	6	9.402442			
100000398	6267	7	8.414319			
100000398	6267	8	8.245182			
100000398	6267	9	7.625186			
100000398	6267	10	9.494592			
100000398	6268	1	5.885611	HARBISON BLVD	NE	HARBISON BLVD & PARKRIDGE DR
100000398	6268	2	5.671143			
100000398	6268	3	5.5095			
100000398	6268	4	5.940059			
100000398	6268	5	5.589318			
100000398	6268	6	7.093474			
100000398	6268	7	5.670753			
100000398	6268	8	5.517415			
100000398	6268	9	5.024323			
100000398	6268	10	5.696042			
100000399	5113	1	32.823246	PINEY GROVE RD	E	PINEY GROVE RD & FERNANDINA RD
100000399	5113	2	37.588051			
100000399	5113	3	29.818888			

Node	Superlink	Run	Average Control Delay	Approach Street Name	Direction	Intersection
100000399	5113	4	35.193257			
100000399	5113	5	29.446974			
100000399	5113	6	33.50979			
100000399	5113	7	28.042756			
100000399	5113	8	34.445724			
100000399	5113	9	35.798932			
100000399	5113	10	30.241692			
100000399	6263	1	22.333134	PINEY GROVE RD	W	PINEY GROVE RD & FERNANDINA RD
100000399	6263	2	24.373684			
100000399	6263	3	23.745942			
100000399	6263	4	24.822927			
100000399	6263	5	23.761834			
100000399	6263	6	22.681643			
100000399	6263	7	20.918937			
100000399	6263	8	22.512782			
100000399	6263	9	22.575643			
100000399	6263	10	20.069807			
100000399	6265	1	13.353276	FERNANDINA RD	SE	PINEY GROVE RD & FERNANDINA RD
100000399	6265	2	14.068781			
100000399	6265	3	13.78025			
100000399	6265	4	12.387043			
100000399	6265	5	14.459422			
100000399	6265	6	14.823981			
100000399	6265	7	14.206417			
100000399	6265	8	14.46991			
100000399	6265	9	12.56969			
100000399	6265	10	14.533546			
100000399	6266	1	53.434418	FERNANDINA RD	N	PINEY GROVE RD & FERNANDINA RD
100000399	6266	2	46.455414			
100000399	6266	3	53.073042			
100000399	6266	4	47.460953			
100000399	6266	5	50.729913			
100000399	6266	6	50.709751			
100000399	6266	7	55.072146			
100000399	6266	8	44.323682			
100000399	6266	9	49.954426			
100000399	6266	10	58.266563			
100000401	5093	1	19.836482	LAKE MURRAY BLVD	E	KINLEY RD
100000401	5093	2	21.19752			
100000401	5093	3	19.613333			
100000401	5093	4	19.997194			
100000401	5093	5	21.2138			
100000401	5093	6	19.327955			
100000401	5093	7	20.326559			
100000401	5093	8	18.657002			
100000401	5093	9	21.828679			
100000401	5093	10	23.161901			
100000401	6276	1	552.111582	KINLEY RD	S	KINLEY RD
100000401	6276	2	712.000267			
100000401	6276	3	914.447802			
100000401	6276	4	679.634211			
100000401	6276	5	698.872208			
100000401	6276	6	1013.404449			
100000401	6276	7	618.097806			
100000401	6276	8	621.657025			
100000401	6276	9	719.842797			
100000401	6276	10	960.793421			
100000401	6313	1	618.469741	LAKE MURRAY BLVD	W	KINLEY RD
100000401	6313	2	858.763343			
100000401	6313	3	725.350886			
100000401	6313	4	837.127189			
100000401	6313	5	796.513638			
100000401	6313	6	957.827333			
100000401	6313	7	655.633059			
100000401	6313	8	569.8622			
100000401	6313	9	593.505073			
100000401	6313	10	1017.908244			
100000401	6556	1	138.56505	PARKRIDGE DR	N	KINLEY RD
100000401	6556	2	198.358872			
100000401	6556	3	184.919206			
100000401	6556	4	139.385589			
100000401	6556	5	197.732183			
100000401	6556	6	155.969936			
100000401	6556	7	76.877446			
100000401	6556	8	262.707406			
100000401	6556	9	297.554782			
100000401	6556	10	402.360064			
100000438	2044	1	0	RAMP	SE	RAMP
100000438	2044	2	0			
100000438	2044	3	0			
100000438	2044	4	0			
100000438	2044	5	0			
100000438	2044	6	0			
100000438	2044	7	0			
100000438	2044	8	0			
100000438	2044	9	0			
100000438	2044	10	0			
100000438	5021	1	6.161194	SUNSET BLVD	NW	RAMP
100000438	5021	2	7.034571			
100000438	5021	3	7.920311			
100000438	5021	4	6.800476			
100000438	5021	5	7.395898			
100000438	5021	6	7.681598			
100000438	5021	7	7.446592			
100000438	5021	8	7.503242			
100000438	5021	9	7.768781			
100000438	5021	10	7.166073			
100000438	5023	1	0.735823	SUNSET BLVD	SE	RAMP
100000438	5023	2	0.265807			
100000438	5023	3	0.416173			
100000438	5023	4	0.354217			
100000438	5023	5	0.504951			
100000438	5023	6	0.338662			
100000438	5023	7	0.432688			
100000438	5023	8	0.496391			
100000438	5023	9	0.314044			
100000438	5023	10	0.551057			
100000446	2047	1	0	RAMP	S	RAMP & I-20 EXIT 63 WB ON RAMP
100000446	2047	2	0			
100000446	2047	3	0			

Node	Superlink	Run	Average Control Delay	Approach Street Name	Direction	Intersection
100000446	2047	4	0			
100000446	2047	5	0			
100000446	2047	6	0			
100000446	2047	7	0			
100000446	2047	8	0			
100000446	2047	9	0			
100000446	2047	10	0			
100000446	2059	1	0	RAMP	SW	RAMP & I-20 EXIT 63 WB ON RAMP
100000446	2059	2	0			
100000446	2059	3	0			
100000446	2059	4	0			
100000446	2059	5	0			
100000446	2059	6	0			
100000446	2059	7	0			
100000446	2059	8	0			
100000446	2059	9	0			
100000446	2059	10	0			
100000450	2060	1	0	RAMP	E	BUSH RIVER RD
100000450	2060	2	0			
100000450	2060	3	0			
100000450	2060	4	0			
100000450	2060	5	0			
100000450	2060	6	0			
100000450	2060	7	0			
100000450	2060	8	0			
100000450	2060	9	0			
100000450	2060	10	0			
100000450	5037	1	0	BUSH RIVER RD	E	BUSH RIVER RD
100000450	5037	2	0			
100000450	5037	3	0			
100000450	5037	4	0			
100000450	5037	5	0			
100000450	5037	6	0			
100000450	5037	7	0			
100000450	5037	8	0			
100000450	5037	9	0			
100000450	5037	10	0			
100000450	5038	1	1.639199	BUSH RIVER RD	NW	BUSH RIVER RD
100000450	5038	2	2.079455			
100000450	5038	3	2.898753			
100000450	5038	4	1.793602			
100000450	5038	5	2.19708			
100000450	5038	6	2.206602			
100000450	5038	7	2.035462			
100000450	5038	8	1.860955			
100000450	5038	9	1.302035			
100000450	5038	10	1.792084			
100000452	2071	1	35.516662	RAMP	W	RAMP & BUSH RIVER RD
100000452	2071	2	40.936516			
100000452	2071	3	39.355933			
100000452	2071	4	40.159808			
100000452	2071	5	38.5381			
100000452	2071	6	38.983812			
100000452	2071	7	40.066172			
100000452	2071	8	37.646851			
100000452	2071	9	40.085125			
100000452	2071	10	40.939197			
100000452	5034	1	1.146959	BUSH RIVER RD	NW	RAMP & BUSH RIVER RD
100000452	5034	2	2.580734			
100000452	5034	3	1.806646			
100000452	5034	4	2.10596			
100000452	5034	5	2.007863			
100000452	5034	6	2.176936			
100000452	5034	7	1.68158			
100000452	5034	8	2.72589			
100000452	5034	9	1.908687			
100000452	5034	10	2.534636			
100000452	5457	1	3.372537	BUSH RIVER RD	SE	RAMP & BUSH RIVER RD
100000452	5457	2	5.094211			
100000452	5457	3	3.692718			
100000452	5457	4	3.726321			
100000452	5457	5	3.973153			
100000452	5457	6	4.072699			
100000452	5457	7	3.439464			
100000452	5457	8	4.43247			
100000452	5457	9	3.71646			
100000452	5457	10	4.476108			
100000455	5457	1	5.079129	BUSH RIVER RD	NW	FRONTAGE RD & BUSH RIVER RD
100000455	5457	2	7.247497			
100000455	5457	3	6.283124			
100000455	5457	4	6.721921			
100000455	5457	5	6.76385			
100000455	5457	6	7.019591			
100000455	5457	7	5.947371			
100000455	5457	8	7.12567			
100000455	5457	9	7.14188			
100000455	5457	10	7.260162			
100000455	6538	1	45.19915	FRONTAGE RD	SW	FRONTAGE RD & BUSH RIVER RD
100000455	6538	2	247.690515			
100000455	6538	3	94.866694			
100000455	6538	4	88.656858			
100000455	6538	5	72.203801			
100000455	6538	6	128.979644			
100000455	6538	7	66.988895			
100000455	6538	8	172.566036			
100000455	6538	9	61.736241			
100000455	6538	10	196.627784			
100000455	6539	1	12.283366	BUSH RIVER RD	SE	FRONTAGE RD & BUSH RIVER RD
100000455	6539	2	18.739893			
100000455	6539	3	13.582489			
100000455	6539	4	15.671763			
100000455	6539	5	17.977486			
100000455	6539	6	16.301062			
100000455	6539	7	13.740452			
100000455	6539	8	18.771362			
100000455	6539	9	15.776762			
100000455	6539	10	16.806449			
100000467	3225	1		RAMP	SW	RAMP & I-126 WB ON RAMP FROM GREYSTONE BLVD
100000467	3225	2				
100000467	3225	3				

Node	Superlink	Run	Average Control Delay	Approach Street Name	Direction	Intersection
100000467	3225	4				
100000467	3225	5				
100000467	3225	6				
100000467	3225	7				
100000467	3225	8				
100000467	3225	9				
100000467	3225	10				
100000467	3238	1	0	RAMP	W	RAMP & I-126 WB ON RAMP FROM GREYSTONE BLVD
100000467	3238	2	0			
100000467	3238	3	0			
100000467	3238	4	0			
100000467	3238	5	0			
100000467	3238	6	0			
100000467	3238	7	0			
100000467	3238	8	0			
100000467	3238	9	0			
100000467	3238	10	0			
100000468	3228	1	0	EXIT 103 WB ON RAMP	NW	EXIT 103 WB ON RAMP & I-26 EXIT 103 WB ON RAMP
100000468	3228	2	0			
100000468	3228	3	0			
100000468	3228	4	0			
100000468	3228	5	0			
100000468	3228	6	0			
100000468	3228	7	0			
100000468	3228	8	0			
100000468	3228	9	0			
100000468	3228	10	0			
100000468	3241	1	0	EXIT 103 WB ON RAMP	W	EXIT 103 WB ON RAMP & I-26 EXIT 103 WB ON RAMP
100000468	3241	2	0			
100000468	3241	3	0			
100000468	3241	4	0			
100000468	3241	5	0			
100000468	3241	6	0			
100000468	3241	7	0			
100000468	3241	8	0			
100000468	3241	9	0			
100000468	3241	10	0			
100000476	3257	1	0	RAMP	N	RAMP
100000476	3257	2	0			
100000476	3257	3	0			
100000476	3257	4	0			
100000476	3257	5	0			
100000476	3257	6	0			
100000476	3257	7	0			
100000476	3257	8	0			
100000476	3257	9	0			
100000476	3257	10	0			
100000476	3262	1	0	RAMP	N	RAMP
100000476	3262	2	0			
100000476	3262	3	0			
100000476	3262	4	0			
100000476	3262	5	0			
100000476	3262	6	0			
100000476	3262	7	0			
100000476	3262	8	0			
100000476	3262	9	0			
100000476	3262	10	0			
100000494	3302	1		EXIT 106 WB ON RAMP	NW	EXIT 106 WB ON RAMP & I-26 EXIT 106 WB ON RAMP
100000494	3302	2				
100000494	3302	3				
100000494	3302	4				
100000494	3302	5				
100000494	3302	6				
100000494	3302	7				
100000494	3302	8				
100000494	3302	9				
100000494	3302	10				
100000494	3306	1	0	EXIT 106 WB ON RAMP	NW	EXIT 106 WB ON RAMP & I-26 EXIT 106 WB ON RAMP
100000494	3306	2	0			
100000494	3306	3	0			
100000494	3306	4	0			
100000494	3306	5	0			
100000494	3306	6	0			
100000494	3306	7	0			
100000494	3306	8	0			
100000494	3306	9	0			
100000494	3306	10	0			
100000497	3310	1	0	RAMP	SE	RAMP & I-26 EXIT 104 EB ON RAMP
100000497	3310	2	0			
100000497	3310	3	0			
100000497	3310	4	0			
100000497	3310	5	0			
100000497	3310	6	0			
100000497	3310	7	0			
100000497	3310	8	0			
100000497	3310	9	0			
100000497	3310	10	0			
100000497	6545	1	0	RAMP	SE	RAMP & I-26 EXIT 104 EB ON RAMP
100000497	6545	2	0			
100000497	6545	3	0			
100000497	6545	4	0			
100000497	6545	5	0			
100000497	6545	6	0			
100000497	6545	7	0			
100000497	6545	8	0			
100000497	6545	9	0			
100000497	6545	10	0			
100000503	3325	1	0	RAMP	SE	RAMP
100000503	3325	2	0			
100000503	3325	3	0			
100000503	3325	4	0			
100000503	3325	5	0			
100000503	3325	6	0			
100000503	3325	7	0			
100000503	3325	8	0			
100000503	3325	9	0			
100000503	3325	10	0			
100000503	6472	1	0		E	RAMP
100000503	6472	2	0			
100000503	6472	3	0			

Node	Superlink	Run	Average Control Delay	Approach Street Name	Direction	Intersection
100000503	6472	4	0			
100000503	6472	5	0			
100000503	6472	6	0			
100000503	6472	7	0			
100000503	6472	8	0			
100000503	6472	9	0			
100000503	6472	10	0			
100000520	3345	1		EXIT 102 WB ON RAMP	N	EXIT 102 WB ON RAMP & I-26 EXIT 102 WB ON RAMP
100000520	3345	2				
100000520	3345	3				
100000520	3345	4				
100000520	3345	5				
100000520	3345	6				
100000520	3345	7				
100000520	3345	8				
100000520	3345	9				
100000520	3345	10				
100000520	3350	1	0	EXIT 102 WB ON RAMP	N	EXIT 102 WB ON RAMP & I-26 EXIT 102 WB ON RAMP
100000520	3350	2	0			
100000520	3350	3	0			
100000520	3350	4	0			
100000520	3350	5	0			
100000520	3350	6	0			
100000520	3350	7	0			
100000520	3350	8	0			
100000520	3350	9	0			
100000520	3350	10	0			
100000523	3355	1	0	ON-RAMP from WB	S	ON-RAMP from WB
100000523	3355	2	0			
100000523	3355	3	0			
100000523	3355	4	0			
100000523	3355	5	0			
100000523	3355	6	0			
100000523	3355	7	0			
100000523	3355	8	0			
100000523	3355	9	0			
100000523	3355	10	0			
100000523	3356	1	0	ON-RAMP from EB	S	ON-RAMP from WB
100000523	3356	2	0			
100000523	3356	3	0			
100000523	3356	4	0			
100000523	3356	5	0			
100000523	3356	6	0			
100000523	3356	7	0			
100000523	3356	8	0			
100000523	3356	9	0			
100000523	3356	10	0			
100000528	3360	1		EXIT 101 WB ON RAMP	N	EXIT 101 WB ON RAMP & I-26 EXIT 101 WB ON RAMP
100000528	3360	2				
100000528	3360	3				
100000528	3360	4				
100000528	3360	5				
100000528	3360	6				
100000528	3360	7				
100000528	3360	8				
100000528	3360	9				
100000528	3360	10				
100000528	3364	1	0	EXIT 101 WB ON RAMP	N	EXIT 101 WB ON RAMP & I-26 EXIT 101 WB ON RAMP
100000528	3364	2	0			
100000528	3364	3	0			
100000528	3364	4	0			
100000528	3364	5	0			
100000528	3364	6	0			
100000528	3364	7	0			
100000528	3364	8	0			
100000528	3364	9	0			
100000528	3364	10	0			
100000702	4338	1	0	RAMP	SW	RAMP & I-20 EXIT 65 WB ON RAMP
100000702	4338	2	0			
100000702	4338	3	0			
100000702	4338	4	0			
100000702	4338	5	0			
100000702	4338	6	0			
100000702	4338	7	0			
100000702	4338	8	0			
100000702	4338	9	0			
100000702	4338	10	0			
100000702	4343	1	0	RAMP	SW	RAMP & I-20 EXIT 65 WB ON RAMP
100000702	4343	2	0			
100000702	4343	3	0			
100000702	4343	4	0			
100000702	4343	5	0			
100000702	4343	6	0			
100000702	4343	7	0			
100000702	4343	8	0			
100000702	4343	9	0			
100000702	4343	10	0			
100000707	5166	1	0	MONTICELLO RD	NW	MONTICELLO RD
100000707	5166	2	0			
100000707	5166	3	0			
100000707	5166	4	0			
100000707	5166	5	0			
100000707	5166	6	0			
100000707	5166	7	0			
100000707	5166	8	0			
100000707	5166	9	0			
100000707	5166	10	0			
100000707	5168	1	0	SERVICE RD	W	MONTICELLO RD
100000707	5168	2	0			
100000707	5168	3	0			
100000707	5168	4	0			
100000707	5168	5	0			
100000707	5168	6	0			
100000707	5168	7	0			
100000707	5168	8	0			
100000707	5168	9	0			
100000707	5168	10	0			
100000707	5174	1	0.905632	MONTICELLO RD	SE	MONTICELLO RD
100000707	5174	2	0.698202			
100000707	5174	3	0.786665			

Node	Superlink	Run	Average Control Delay	Approach Street Name	Direction	Intersection
100000707	5174	4	11.248043			
100000707	5174	5	1.139638			
100000707	5174	6	0.90597			
100000707	5174	7	0.83688			
100000707	5174	8	0.516879			
100000707	5174	9	27.483822			
100000707	5174	10	1.070026			
100000709	4352	1	0	RAMP	S	RAMP & I-20 EXIT 68 WB ON RAMP
100000709	4352	2	0			
100000709	4352	3	0			
100000709	4352	4	0			
100000709	4352	5	0			
100000709	4352	6	0			
100000709	4352	7	0			
100000709	4352	8	0			
100000709	4352	9	0			
100000709	4352	10	0			
100000709	4353	1	0	RAMP	S	RAMP & I-20 EXIT 68 WB ON RAMP
100000709	4353	2	0			
100000709	4353	3	0			
100000709	4353	4	0			
100000709	4353	5	0			
100000709	4353	6	0			
100000709	4353	7	0			
100000709	4353	8	0			
100000709	4353	9	0			
100000709	4353	10	0			
100000710	4356	1	0	I-20 EXIT 68 WB OFF RAMP	W	I-20 EXIT 68 WB OFF RAMP & SERVICE RD
100000710	4356	2	0			
100000710	4356	3	0			
100000710	4356	4	0			
100000710	4356	5	0			
100000710	4356	6	0			
100000710	4356	7	0			
100000710	4356	8	0			
100000710	4356	9	0			
100000710	4356	10	0			
100000712	5157	1	0.10822	BUCKNER RD	NE	BUCKNER RD & RAMP
100000712	5157	2	0.088155			
100000712	5157	3	0.080322			
100000712	5157	4	0.068104			
100000712	5157	5	0.094556			
100000712	5157	6	0.146787			
100000712	5157	7	0.095871			
100000712	5157	8	0.090109			
100000712	5157	9	0.084658			
100000712	5157	10	0.107585			
100000712	5160	1	24.59739	BUCKNER RD	SW	BUCKNER RD & RAMP
100000712	5160	2	28.446495			
100000712	5160	3	19.683651			
100000712	5160	4	24.391218			
100000712	5160	5	21.743791			
100000712	5160	6	17.032467			
100000712	5160	7	20.279879			
100000712	5160	8	25.211003			
100000712	5160	9	14.745185			
100000712	5160	10	24.169044			
100000804	6261	1	31.664698	TRAM RD	SW	TRAM RD & SIDNEY RD
100000804	6261	2	23.481655			
100000804	6261	3	26.139741			
100000804	6261	4	17.075293			
100000804	6261	5	24.837765			
100000804	6261	6	23.38164			
100000804	6261	7	21.018648			
100000804	6261	8	22.779265			
100000804	6261	9	25.252236			
100000804	6261	10	27.740849			
100000804	6457	1	207.285132	SIDNEY RD	NW	TRAM RD & SIDNEY RD
100000804	6457	2	191.47118			
100000804	6457	3	212.606077			
100000804	6457	4	195.819537			
100000804	6457	5	212.535486			
100000804	6457	6	220.551379			
100000804	6457	7	196.764471			
100000804	6457	8	187.099704			
100000804	6457	9	191.283198			
100000804	6457	10	184.301648			
100000804	6458	1	2.516789	TRAM RD	NE	TRAM RD & SIDNEY RD
100000804	6458	2	2.404744			
100000804	6458	3	2.182006			
100000804	6458	4	2.510646			
100000804	6458	5	2.305821			
100000804	6458	6	2.78574			
100000804	6458	7	2.10902			
100000804	6458	8	2.97052			
100000804	6458	9	2.083703			
100000804	6458	10	2.899765			
100000882	5151	1		SERVICE RD	SW	SERVICE RD
100000882	5151	2				
100000882	5151	3				
100000882	5151	4				
100000882	5151	5				
100000882	5151	6				
100000882	5151	7				
100000882	5151	8				
100000882	5151	9				
100000882	5151	10				
100000882	6446	1	0	SERVICE RD	NE	SERVICE RD
100000882	6446	2	0			
100000882	6446	3	0			
100000882	6446	4	0			
100000882	6446	5	0			
100000882	6446	6	0			
100000882	6446	7	0			
100000882	6446	8	0			
100000882	6446	9	0			
100000882	6446	10	0			
100000882	6449	1	0		N	SERVICE RD
100000882	6449	2	0			
100000882	6449	3	0			

Node	Superlink	Run	Average Control Delay	Approach Street Name	Direction	Intersection
100000882	6449	4	0			
100000882	6449	5	0			
100000882	6449	6	0			
100000882	6449	7	0			
100000882	6449	8	0			
100000882	6449	9	0			
100000882	6449	10	0			
100000883	5148	1	0	BROAD RIVER RD	NW	BROAD RIVER RD & 6448 (E)
100000883	5148	2	0			
100000883	5148	3	0			
100000883	5148	4	0			
100000883	5148	5	0			
100000883	5148	6	0			
100000883	5148	7	0			
100000883	5148	8	0			
100000883	5148	9	0			
100000883	5148	10	0			
100000883	6447	1	13.817525	BROAD RIVER RD	SE	BROAD RIVER RD & 6448 (E)
100000883	6447	2	10.994233			
100000883	6447	3	11.635456			
100000883	6447	4	11.566972			
100000883	6447	5	10.115116			
100000883	6447	6	10.335562			
100000883	6447	7	11.645096			
100000883	6447	8	10.757999			
100000883	6447	9	12.169327			
100000883	6447	10	13.127321			
100000883	6448	1			W	BROAD RIVER RD & 6448 (E)
100000883	6448	2				
100000883	6448	3				
100000883	6448	4				
100000883	6448	5				
100000883	6448	6				
100000883	6448	7				
100000883	6448	8				
100000883	6448	9				
100000883	6448	10				
100000895	3229	1	0	RAMP	SW	RAMP & PINEY GROVE RD
100000895	3229	2	0			
100000895	3229	3	0			
100000895	3229	4	0			
100000895	3229	5	0			
100000895	3229	6	0			
100000895	3229	7	0			
100000895	3229	8	0			
100000895	3229	9	0			
100000895	3229	10	0			
100000895	6543	1	1.450795	PINEY GROVE RD	E	RAMP & PINEY GROVE RD
100000895	6543	2	1.294592			
100000895	6543	3	3.102652			
100000895	6543	4	1.16057			
100000895	6543	5	1.368026			
100000895	6543	6	1.045703			
100000895	6543	7	1.889899			
100000895	6543	8	1.587722			
100000895	6543	9	2.392015			
100000895	6543	10	1.610208			
100000895	6544	1	0	PINEY GROVE RD	W	RAMP & PINEY GROVE RD
100000895	6544	2	0			
100000895	6544	3	0			
100000895	6544	4	0			
100000895	6544	5	0			
100000895	6544	6	0			
100000895	6544	7	0			
100000895	6544	8	0			
100000895	6544	9	0			
100000895	6544	10	0			
100000897	3243	1	57.562346	I-126 WB OFF RAMP TO COLONIAL LIFE BLVD	NE	I-126 WB OFF RAMP TO COLONIAL LIFE BLVD
100000897	3243	2	10.958618			
100000897	3243	3	11.346828			
100000897	3243	4	7.56413			
100000897	3243	5	13.348506			
100000897	3243	6	9.398101			
100000897	3243	7	7.622641			
100000897	3243	8	7.38807			
100000897	3243	9	8.610205			
100000897	3243	10	8.135712			
100000897	5134	1	22.227255	W COLONIAL LIFE BLVD	NW	I-126 WB OFF RAMP TO COLONIAL LIFE BLVD
100000897	5134	2	16.734145			
100000897	5134	3	20.233708			
100000897	5134	4	21.79662			
100000897	5134	5	14.892465			
100000897	5134	6	23.699312			
100000897	5134	7	13.486766			
100000897	5134	8	20.008261			
100000897	5134	9	20.310352			
100000897	5134	10	20.499753			
100000897	6471	1	0.584407	COLONIAL LIFE BLVD W	S	I-126 WB OFF RAMP TO COLONIAL LIFE BLVD
100000897	6471	2	0.640621			
100000897	6471	3	0.589303			
100000897	6471	4	0.546156			
100000897	6471	5	0.681012			
100000897	6471	6	0.680468			
100000897	6471	7	0.651548			
100000897	6471	8	0.622579			
100000897	6471	9	0.718296			
100000897	6471	10	0.634658			
100000898	51	1	322.43353	I-26 EXIT 108 EB OFF RAMP	S	I-26 EXIT 108 EB OFF RAMP
100000898	51	2	354.862269			
100000898	51	3	350.535678			
100000898	51	4	346.672771			
100000898	51	5	376.147074			
100000898	51	6	361.209285			
100000898	51	7	354.181233			
100000898	51	8	364.081226			
100000898	51	9	345.531465			
100000898	51	10	361.12912			
100000898	5130	1	18.705866	BUSH RIVER RD	N	I-26 EXIT 108 EB OFF RAMP
100000898	5130	2	27.065549			
100000898	5130	3	13.748289			

Node	Superlink	Run	Average Control Delay	Approach Street Name	Direction	Intersection
100000898	5130	4	22.952099			
100000898	5130	5	21.404221			
100000898	5130	6	28.343792			
100000898	5130	7	21.379501			
100000898	5130	8	19.851998			
100000898	5130	9	22.111015			
100000898	5130	10	15.797713			
100000898	5131	1	11.164547	BUSH RIVER RD	E	I-26 EXIT 108 EB OFF RAMP
100000898	5131	2	10.093918			
100000898	5131	3	9.192162			
100000898	5131	4	10.786933			
100000898	5131	5	10.058142			
100000898	5131	6	9.584679			
100000898	5131	7	9.83814			
100000898	5131	8	12.009979			
100000898	5131	9	10.120175			
100000898	5131	10	11.411622			
100000898	6503	1	10.973463	BUSH RIVER RD	W	I-26 EXIT 108 EB OFF RAMP
100000898	6503	2	10.62478			
100000898	6503	3	11.101499			
100000898	6503	4	12.015276			
100000898	6503	5	10.678812			
100000898	6503	6	10.704259			
100000898	6503	7	8.353646			
100000898	6503	8	11.662153			
100000898	6503	9	8.686266			
100000898	6503	10	11.475189			
100000899	3298	1	6.006059	EXIT 106 WB OFF RAMP	SE	EXIT 106 WB OFF RAMP & BURNING TREE RD
100000899	3298	2	7.113311			
100000899	3298	3	7.393846			
100000899	3298	4	7.09182			
100000899	3298	5	6.46958			
100000899	3298	6	6.763808			
100000899	3298	7	6.676113			
100000899	3298	8	6.243328			
100000899	3298	9	6.098482			
100000899	3298	10	9.416907			
100000899	6105	1	0	BURNING TREE RD	S	EXIT 106 WB OFF RAMP & BURNING TREE RD
100000899	6105	2	0			
100000899	6105	3	0			
100000899	6105	4	0			
100000899	6105	5	0			
100000899	6105	6	0			
100000899	6105	7	0			
100000899	6105	8	0			
100000899	6105	9	0			
100000899	6105	10	0			
100000899	6106	1	0	BURNING TREE RD	N	EXIT 106 WB OFF RAMP & BURNING TREE RD
100000899	6106	2	0			
100000899	6106	3	0			
100000899	6106	4	0			
100000899	6106	5	0			
100000899	6106	6	0			
100000899	6106	7	0			
100000899	6106	8	0			
100000899	6106	9	0			
100000899	6106	10	0			
100000902	4292	1	44.92715	EXIT 110 WB OFF RAMP	NE	SUNSET BLVD
100000902	4292	2	43.639585			
100000902	4292	3	40.651439			
100000902	4292	4	39.529634			
100000902	4292	5	48.75092			
100000902	4292	6	37.283218			
100000902	4292	7	41.045528			
100000902	4292	8	36.803598			
100000902	4292	9	40.514594			
100000902	4292	10	49.294735			
100000902	4947	1	29.467555	SUNSET BLVD	W	SUNSET BLVD
100000902	4947	2	30.129202			
100000902	4947	3	23.2908			
100000902	4947	4	22.996428			
100000902	4947	5	23.588285			
100000902	4947	6	18.387106			
100000902	4947	7	16.952191			
100000902	4947	8	20.385101			
100000902	4947	9	16.981181			
100000902	4947	10	22.42159			
100000902	4951	1	0.000042	SUNSET BLVD	E	SUNSET BLVD
100000902	4951	2	0.000037			
100000902	4951	3	0			
100000902	4951	4	0			
100000902	4951	5	0.000006			
100000902	4951	6	0.000173			
100000902	4951	7	0			
100000902	4951	8	0			
100000902	4951	9	0			
100000902	4951	10	0			
100000903	4289	1	102.665189	EXIT 110 WB OFF RAMP	NW	RAMP
100000903	4289	2	108.743175			
100000903	4289	3	56.223201			
100000903	4289	4	95.001019			
100000903	4289	5	73.590693			
100000903	4289	6	65.350929			
100000903	4289	7	79.401566			
100000903	4289	8	102.545784			
100000903	4289	9	58.57237			
100000903	4289	10	99.984505			
100000903	4298	1	35.472863	RAMP	SE	RAMP
100000903	4298	2	41.245694			
100000903	4298	3	40.43098			
100000903	4298	4	37.268113			
100000903	4298	5	36.24398			
100000903	4298	6	40.016216			
100000903	4298	7	40.891028			
100000903	4298	8	35.667015			
100000903	4298	9	43.038207			
100000903	4298	10	42.792026			
100000903	4950	1	18.694823	SUNSET BLVD	E	RAMP
100000903	4950	2	19.057476			
100000903	4950	3	19.687989			

Node	Superlink	Run	Average Control Delay	Approach Street Name	Direction	Intersection
100000903	4950	4	18.082875			
100000903	4950	5	19.461176			
100000903	4950	6	18.774159			
100000903	4950	7	17.84949			
100000903	4950	8	19.049793			
100000903	4950	9	18.78224			
100000903	4950	10	18.458117			
100000903	4951	1	21.402815	SUNSET BLVD	W	RAMP
100000903	4951	2	20.389711			
100000903	4951	3	20.355449			
100000903	4951	4	20.922143			
100000903	4951	5	20.607361			
100000903	4951	6	18.868492			
100000903	4951	7	18.968706			
100000903	4951	8	19.78062			
100000903	4951	9	18.596535			
100000903	4951	10	19.828384			

2040 Build RRPA AM

Node	Superlink	Run	Average Control Delay	Approach Street Name	Direction	Intersection
4	5081	1	10.751828	BROAD RIVER RD	W	WESTERN LN & BROAD RIVER RD
4	5081	2	10.473705			
4	5081	3	11.7			
4	5081	4	12.1			
4	5081	5	11.6			
4	5081	6	12.763148			
4	5081	7	16.555213			
4	5081	8	11.9			
4	5081	9	12.2			
4	5081	10	11.6			
4	6465	1	14.054109	WESTERN LN	S	WESTERN LN & BROAD RIVER RD
4	6465	2	16.00095			
4	6465	3	15.4			
4	6465	4	14.9			
4	6465	5	17.135787			
4	6465	6	13.562748			
4	6465	7	25.1			
4	6465	8	16.7			
4	6465	9	15.3			
4	6465	10	14.215715			
4	6466	1	5.428166	BROAD RIVER RD	E	WESTERN LN & BROAD RIVER RD
4	6466	2	5.8			
4	6466	3	6.0			
4	6466	4	5.277223			
4	6466	5	6.849691			
4	6466	6	6.6			
4	6466	7	60.0			
4	6466	8	6.068344			
4	6466	9	6.440051			
4	6466	10	6.0			
4	6467	1	6.7	WESTERN LN	N	WESTERN LN & BROAD RIVER RD
4	6467	2	7.9			
4	6467	3	7.490676			
4	6467	4	7.062988			
4	6467	5	7.9			
4	6467	6	7.0			
4	6467	7	23.8			
4	6467	8	7.100665			
4	6467	9	7.782463			
4	6467	10	7.7			
40	6624	1	68.9	I-26 EB EXIT 106 OFF RAMP	E	I-26 EB EXIT 106 OFF RAMP, ST ANDREWS RD, I-26 WB TO BURNING TREE RD AND TO ST ANDREWS RD OFF RAMP,
40	6624	2	75.359432			
40	6624	3	103.289243			
40	6624	4	91.1			
40	6624	5	71.9			
40	6624	6	73.7			
40	6624	7	98.911205			
40	6624	8	60.38906			
40	6624	9	83.0			
40	6624	10	68.4			
40	6734	1	43.862551	ST ANDREWS RD	E	I-26 EB EXIT 106 OFF RAMP, ST ANDREWS RD, I-26 WB TO BURNING TREE RD AND TO ST ANDREWS RD OFF RAMP,
40	6734	2	45.979879			
40	6734	3	41.0			
40	6734	4	45.4			
40	6734	5	47.7			
40	6734	6	49.497935			
40	6734	7	48.10126			
40	6734	8	43.6			
40	6734	9	41.9			
40	6734	10	43.419391			
40	6737	1	41.311001	ST ANDREWS RD	W	I-26 EB EXIT 106 OFF RAMP, ST ANDREWS RD, I-26 WB TO BURNING TREE RD AND TO ST ANDREWS RD OFF RAMP,
40	6737	2	38.6			
40	6737	3	41.9			
40	6737	4	38.2			
40	6737	5	37.7			
40	6737	6	36.411711			
40	6737	7	35.273243			
40	6737	8	41.4			
40	6737	9	40.2			
40	6737	10	40.5			
40	6775	1	35.999055	I-26 WB TO BURNING TREE RD AND TO ST AND	W	I-26 EB EXIT 106 OFF RAMP, ST ANDREWS RD, I-26 WB TO BURNING TREE RD AND TO ST ANDREWS RD OFF RAMP,
40	6775	2	37.10658			
40	6775	3	36.4			
40	6775	4	38.5			
40	6775	5	35.7			
40	6775	6	36.062087			
40	6775	7	36.22123			
40	6775	8	36.4			
40	6775	9	34.6			
40	6775	10	35.3			
52	6750	1	6.341453	BUSH RIVER RD	E	BUSH RIVER RD, 6778 (SE) & 6777 (E)
52	6750	2	5.836687			
52	6750	3	5.7			
52	6750	4	6.0			
52	6750	5	5.7			
52	6750	6	6.231889			
52	6750	7	5.821507			
52	6750	8	6.3			
52	6750	9	6.1			
52	6750	10	6.2			
52	6778	1	18.937764		NW	BUSH RIVER RD, 6778 (SE) & 6777 (E)
52	6778	2	18.146943			
52	6778	3	18.9			
52	6778	4	19.8			
52	6778	5	21.6			
52	6778	6	18.179873			
52	6778	7	18.529037			
52	6778	8	18.3			
52	6778	9	18.4			
52	6778	10	19.7			
54	6057	1	14.442412	BROAD RIVER RD	SE	EXIT 65 RAMP TO US 176, BROAD RIVER RD & RAMP
54	6057	2	10.273508			
54	6057	3	17.9			
54	6057	4	16.012644			
54	6057	5	14.097442			
54	6057	6	2.3			
54	6057	7	19.3			
54	6057	8	3.008384			
54	6057	9	13.602387			
54	6057	10	14.0			
54	6575	1	20.4	EXIT 65 RAMP TO US 176	W	EXIT 65 RAMP TO US 176, BROAD RIVER RD & RAMP
54	6575	2	17.883997			
54	6575	3	19.42466			
54	6575	4	19.1			
54	6575	5	17.4			

Node	Superlink	Run	Average Control Delay	Approach Street Name	Direction	Intersection
54	6575	6	17.6			
54	6575	7	19.559959			
54	6575	8	18.093695			
54	6575	9	20.1			
54	6575	10	19.7			
54	6580	1	0	BROAD RIVER RD	NW	EXIT 65 RAMP TO US 176, BROAD RIVER RD & RAMP
54	6580	2	0			
54	6580	3	0.0			
54	6580	4	0.0			
54	6580	5	0.0			
54	6580	6	0			
54	6580	7	0			
54	6580	8	0.0			
54	6580	9	0.0			
54	6580	10	0.0			
65	2067	1	0	RAMP	N	6564 (W) & RAMP
65	2067	2	0			
65	2067	3	0.0			
65	2067	4	0.0			
65	2067	5	0.0			
65	2067	6	0			
65	2067	7	0			
65	2067	8	0.0			
65	2067	9	0.0			
65	2067	10	0.0			
65	6564	1	0		NE	6564 (W) & RAMP
65	6564	2	0			
65	6564	3	0.0			
65	6564	4	0.0			
65	6564	5	0.0			
65	6564	6	0			
65	6564	7	0			
65	6564	8	0.0			
65	6564	9	0.0			
65	6564	10	0			
71	6659	1	15.327751	PINEY GROVE RD	E	PINEY GROVE RD, I-26 EB EXIT 104 OFF RAMP & I-26 EB EXIT 104 ON RAMP
71	6659	2	15.1			
71	6659	3	11.7			
71	6659	4	12.2			
71	6659	5	13.564767			
71	6659	6	12.824579			
71	6659	7	13.5			
71	6659	8	12.4			
71	6659	9	12.143539			
71	6659	10	12.11232			
71	6660	1	0.0	PINEY GROVE RD	W	PINEY GROVE RD, I-26 EB EXIT 104 OFF RAMP & I-26 EB EXIT 104 ON RAMP
71	6660	2	0.0			
71	6660	3	0.001727			
71	6660	4	0.000001			
71	6660	5	0.0			
71	6660	6	0.00339			
71	6660	7	0.001755			
71	6660	8	0.0			
71	6660	9	0.0			
71	6660	10	0.000001			
74	6579	1	0		NE	6579 (SW), 6581 (W) & RAMP
74	6579	2	0.0			
74	6579	3	0.0			
74	6579	4	0.0			
74	6579	5	0			
74	6579	6	0			
74	6579	7	0.0			
74	6579	8	0.0			
74	6579	9	0			
74	6579	10	0			
74	6581	1	0.0		NE	6579 (SW), 6581 (W) & RAMP
74	6581	2	0.0			
74	6581	3	0			
74	6581	4	0			
74	6581	5	0.0			
74	6581	6	0.0			
74	6581	7	0.0			
74	6581	8	0			
74	6581	9	0			
74	6581	10	0			
79	5148	1	48.4	BROAD RIVER RD	NW	6584 (NE), BROAD RIVER RD, 6583 (SW), 6587 (W) & 6581 (E)
79	5148	2	42.8			
79	5148	3	46.249418			
79	5148	4	45.385555			
79	5148	5	46.4			
79	5148	6	43.7			
79	5148	7	44.7			
79	5148	8	43.027204			
79	5148	9	47.295571			
79	5148	10	46.9			
79	6580	1	39.8	BROAD RIVER RD	SE	6584 (NE), BROAD RIVER RD, 6583 (SW), 6587 (W) & 6581 (E)
79	6580	2	39.3			
79	6580	3	37.61442			
79	6580	4	39.362087			
79	6580	5	39.140289			
79	6580	6	38.045225			
79	6580	7	38.975072			
79	6580	8	35.164399			
79	6580	9	39.159667			
79	6580	10	38.795047			
79	6583	1	45.66464		N	6584 (NE), BROAD RIVER RD, 6583 (SW), 6587 (W) & 6581 (E)
79	6583	2	49.476195			
79	6583	3	49.491965			
79	6583	4	52.419542			
79	6583	5	52.38415			
79	6583	6	47.114419			
79	6583	7	47.15198			
79	6583	8	50.19763			
79	6583	9	46.590462			
79	6583	10	50.678736			
79	6584	1	52.754766		S	6584 (NE), BROAD RIVER RD, 6583 (SW), 6587 (W) & 6581 (E)
79	6584	2	53.563835			
79	6584	3	56.471021			
79	6584	4	53.748393			
79	6584	5	53.485205			
79	6584	6	53.701415			
79	6584	7	51.431599			
79	6584	8	51.602627			
79	6584	9	52.875443			
79	6584	10	55.211271			

Node	Superlink	Run	Average Control Delay	Approach Street Name	Direction	Intersection
85	6627	1	0	I-26 WB EXIT 106 ON RAMP	N	I-26 WB EXIT 106 ON RAMP
85	6627	2	0			
85	6627	3	0			
85	6627	4	0			
85	6627	5	0			
85	6627	6	0			
85	6627	7	0			
85	6627	8	0			
85	6627	9	0			
85	6627	10	0			
85	6652	1	0	I-26 WB EXIT 106 ON RAMP	NW	I-26 WB EXIT 106 ON RAMP
85	6652	2	0			
85	6652	3	0			
85	6652	4	0			
85	6652	5	0			
85	6652	6	0			
85	6652	7	0			
85	6652	8	0			
85	6652	9	0			
85	6652	10	0			
99	6647	1	49.579583	I-26 WB EXIT 103 OFF RAMP	NW	I-26 WB EXIT 103 OFF RAMP, HARBISON BLVD, I-26 WB EXIT 103 ON RAMP & 6770 (SW)
99	6647	2	82.995437			
99	6647	3	76.670561			
99	6647	4	49.581898			
99	6647	5	52.985469			
99	6647	6	74.9046			
99	6647	7	73.13266			
99	6647	8	45.788927			
99	6647	9	92.011793			
99	6647	10	56.57083			
99	6719	1	5.640947	HARBISON BLVD	SW	I-26 WB EXIT 103 OFF RAMP, HARBISON BLVD, I-26 WB EXIT 103 ON RAMP & 6770 (SW)
99	6719	2	5.28849			
99	6719	3	5.445526			
99	6719	4	5.763116			
99	6719	5	5.144008			
99	6719	6	5.926885			
99	6719	7	7.076036			
99	6719	8	6.501634			
99	6719	9	6.149883			
99	6719	10	5.635486			
99	6770	1	6.269325		NE	I-26 WB EXIT 103 OFF RAMP, HARBISON BLVD, I-26 WB EXIT 103 ON RAMP & 6770 (SW)
99	6770	2	5.038628			
99	6770	3	5.022198			
99	6770	4	4.828575			
99	6770	5	5.552713			
99	6770	6	4.669901			
99	6770	7	5.507994			
99	6770	8	6.304823			
99	6770	9	4.967972			
99	6770	10	5.773759			
104	3211	1	32.815392	I-26 EB EXIT 103 OFF RAMP	SE	HARBISON BLVD, I-26 EB EXIT 103 OFF RAMP, 6770 (NE) & I-26 EB EXIT 103 ON RAMP
104	3211	2	33.942265			
104	3211	3	33.97542			
104	3211	4	34.757179			
104	3211	5	30.743021			
104	3211	6	42.828935			
104	3211	7	37.510106			
104	3211	8	31.943129			
104	3211	9	43.926194			
104	3211	10	32.924804			
104	6717	1	2.24551	HARBISON BLVD	NE	HARBISON BLVD, I-26 EB EXIT 103 OFF RAMP, 6770 (NE) & I-26 EB EXIT 103 ON RAMP
104	6717	2	2.243254			
104	6717	3	2.700968			
104	6717	4	2.340167			
104	6717	5	2.118759			
104	6717	6	2.201057			
104	6717	7	2.009684			
104	6717	8	2.395708			
104	6717	9	1.700781			
104	6717	10	2.491306			
104	6770	1	5.297499		SW	HARBISON BLVD, I-26 EB EXIT 103 OFF RAMP, 6770 (NE) & I-26 EB EXIT 103 ON RAMP
104	6770	2	6.597077			
104	6770	3	6.611969			
104	6770	4	5.938748			
104	6770	5	6.69752			
104	6770	6	6.996827			
104	6770	7	7.400456			
104	6770	8	6.662451			
104	6770	9	7.2562			
104	6770	10	6.908788			
107	3243	1	20.507469	RAMP	NW	RAMP, COLONIAL LIFE BLVD W & 6681 (NW)
107	3243	2	19.550779			
107	3243	3	19.77235			
107	3243	4	18.781901			
107	3243	5	19.711512			
107	3243	6	20.281322			
107	3243	7	18.665037			
107	3243	8	20.279676			
107	3243	9	19.930943			
107	3243	10	20.035746			
107	6545	1	7.631191	COLONIAL LIFE BLVD W	SW	RAMP, COLONIAL LIFE BLVD W & 6681 (NW)
107	6545	2	7.467574			
107	6545	3	7.432978			
107	6545	4	7.180939			
107	6545	5	6.936827			
107	6545	6	6.896749			
107	6545	7	5.741143			
107	6545	8	6.949301			
107	6545	9	6.028132			
107	6545	10	8.485578			
107	6678	1	1.190609	COLONIAL LIFE BLVD W	NE	RAMP, COLONIAL LIFE BLVD W & 6681 (NW)
107	6678	2	0			
107	6678	3	0.288642			
107	6678	4	0.938316			
107	6678	5	0.73149			
107	6678	6	0.624067			
107	6678	7	0.04355			
107	6678	8	0.117238			
107	6678	9	0			
107	6678	10	0.477353			
108	6676	1	23.476395		SE	COLONIAL LIFE BLVD W, 6676 (NW) & 6688 (SE)
108	6676	2	27.670918			
108	6676	3	23.884396			
108	6676	4	23.324149			
108	6676	5	22.975252			

Node	Superlink	Run	Average Control Delay	Approach Street Name	Direction	Intersection
108	6676	6	24.180862			
108	6676	7	24.689336			
108	6676	8	26.832148			
108	6676	9	27.720859			
108	6676	10	24.330639			
108	6678	1	18.598024	COLONIAL LIFE BLVD W	SW	COLONIAL LIFE BLVD W, 6676 (NW) & 6688 (SE)
108	6678	2	14.915394			
108	6678	3	16.834			
108	6678	4	18.945984			
108	6678	5	20.102665			
108	6678	6	18.375573			
108	6678	7	17.334446			
108	6678	8	17.343329			
108	6678	9	15.733914			
108	6678	10	14.757709			
118	2071	1	18.184549	RAMP	W	BUSH RIVER RD & RAMP
118	2071	2	14.407549			
118	2071	3	14.003613			
118	2071	4	14.601617			
118	2071	5	14.576593			
118	2071	6	13.053622			
118	2071	7	12.939823			
118	2071	8	15.386448			
118	2071	9	16.528632			
118	2071	10	15.986366			
118	6750	1	0	BUSH RIVER RD	NW	BUSH RIVER RD & RAMP
118	6750	2	0			
118	6750	3	0			
118	6750	4	0			
118	6750	5	0			
118	6750	6	0			
118	6750	7	0			
118	6750	8	0			
118	6750	9	0			
118	6750	10	0			
118	6780	1	6.810519	BUSH RIVER RD	SE	BUSH RIVER RD & RAMP
118	6780	2	5.794101			
118	6780	3	5.048872			
118	6780	4	5.532797			
118	6780	5	6.039464			
118	6780	6	4.941737			
118	6780	7	6.271127			
118	6780	8	6.607386			
118	6780	9	6.035893			
118	6780	10	6.147193			
120	6740	1	11.38978	BUSH RIVER RD	W	BUSH RIVER RD & 6741 (NE)
120	6740	2	9.792281			
120	6740	3	10.025768			
120	6740	4	9.261125			
120	6740	5	9.004091			
120	6740	6	11.037061			
120	6740	7	10.233378			
120	6740	8	9.198602			
120	6740	9	8.949563			
120	6740	10	9.452964			
120	6741	1	20.408896		SW	BUSH RIVER RD & 6741 (NE)
120	6741	2	23.773891			
120	6741	3	23.09978			
120	6741	4	24.72125			
120	6741	5	24.192717			
120	6741	6	23.722539			
120	6741	7	23.232765			
120	6741	8	23.763573			
120	6741	9	21.75697			
120	6741	10	23.21395			
120	6781	1	7.523693	BUSH RIVER RD	E	BUSH RIVER RD & 6741 (NE)
120	6781	2	5.793783			
120	6781	3	7.00046			
120	6781	4	6.064398			
120	6781	5	6.731577			
120	6781	6	6.474149			
120	6781	7	6.817093			
120	6781	8	6.204318			
120	6781	9	7.116846			
120	6781	10	6.320627			
123	3328	1	0	I-26 EB EXIT 103 ON RAMP	SE	I-26 EB EXIT 103 ON RAMP & 6718 (W)
123	3328	2	0			
123	3328	3	0			
123	3328	4	0			
123	3328	5	0			
123	3328	6	0			
123	3328	7	0			
123	3328	8	0			
123	3328	9	0			
123	3328	10	0			
127	5116	1	46.736964	ST ANDREWS RD	E	WOODLAND HILLS RD, ST ANDREWS RD, I-26 EB EXIT 106 OFF RAMP & 6772 (NE)
127	5116	2	40.87706			
127	5116	3	40.197431			
127	5116	4	41.715214			
127	5116	5	42.362831			
127	5116	6	42.137686			
127	5116	7	39.910235			
127	5116	8	45.901001			
127	5116	9	40.929678			
127	5116	10	37.580195			
127	5119	1	23.971734	WOODLAND HILLS RD	N	WOODLAND HILLS RD, ST ANDREWS RD, I-26 EB EXIT 106 OFF RAMP & 6772 (NE)
127	5119	2	23.348319			
127	5119	3	20.645818			
127	5119	4	22.71352			
127	5119	5	18.432416			
127	5119	6	22.09399			
127	5119	7	20.94491			
127	5119	8	18.976987			
127	5119	9	26.414843			
127	5119	10	21.148386			
127	6736	1	6.562945	ST ANDREWS RD	W	WOODLAND HILLS RD, ST ANDREWS RD, I-26 EB EXIT 106 OFF RAMP & 6772 (NE)
127	6736	2	4.936298			
127	6736	3	5.508131			
127	6736	4	5.581893			
127	6736	5	5.301011			
127	6736	6	5.903603			
127	6736	7	5.13327			
127	6736	8	5.330806			
127	6736	9	5.033819			
127	6736	10	6.011406			

Node	Superlink	Run	Average Control Delay	Approach Street Name	Direction	Intersection
127	6773	1	13.627615	I-26 EB EXIT 106 OFF RAMP	S	WOODLAND HILLS RD, ST ANDREWS RD, I-26 EB EXIT 106 OFF RAMP & 6772 (NE)
127	6773	2	12.82446			
127	6773	3	16.678034			
127	6773	4	14.828318			
127	6773	5	18.461734			
127	6773	6	12.556092			
127	6773	7	15.186648			
127	6773	8	13.371729			
127	6773	9	15.593644			
127	6773	10	15.836098			
134	6563	1	28.352169		S	6563 (N), 6777 (W) & BUSH RIVER RD
134	6563	2	26.896892			
134	6563	3	26.859345			
134	6563	4	27.763117			
134	6563	5	28.223603			
134	6563	6	27.594667			
134	6563	7	29.822634			
134	6563	8	25.563374			
134	6563	9	26.986904			
134	6563	10	27.959949			
134	6777	1	0		E	6563 (N), 6777 (W) & BUSH RIVER RD
134	6777	2	0			
134	6777	3	0			
134	6777	4	0			
134	6777	5	0			
134	6777	6	0			
134	6777	7	0			
134	6777	8	0			
134	6777	9	0			
134	6777	10	0			
136	6555	1	13.758972	EXIT 63 RAMP TO BUSH RIVER RD	E	EXIT 63 RAMP TO BUSH RIVER RD, BUSH RIVER RD & RAMP
136	6555	2	14.294913			
136	6555	3	12.696623			
136	6555	4	13.859355			
136	6555	5	15.143112			
136	6555	6	13.601875			
136	6555	7	13.948907			
136	6555	8	13.738076			
136	6555	9	14.047617			
136	6555	10	13.476373			
136	6739	1	0	BUSH RIVER RD	SE	EXIT 63 RAMP TO BUSH RIVER RD, BUSH RIVER RD & RAMP
136	6739	2	0			
136	6739	3	0			
136	6739	4	0			
136	6739	5	0			
136	6739	6	0			
136	6739	7	0			
136	6739	8	0			
136	6739	9	0			
136	6739	10	0			
136	6781	1	1.840232	BUSH RIVER RD	NW	EXIT 63 RAMP TO BUSH RIVER RD, BUSH RIVER RD & RAMP
136	6781	2	1.784602			
136	6781	3	1.181676			
136	6781	4	1.692773			
136	6781	5	1.733969			
136	6781	6	1.646989			
136	6781	7	1.713503			
136	6781	8	1.761367			
136	6781	9	1.692119			
136	6781	10	1.879201			
141	6751	1	18.15457		NE	BUSH RIVER RD, 6752 (NE) & 6751 (SW)
141	6751	2	17.561423			
141	6751	3	26.602966			
141	6751	4	21.862374			
141	6751	5	18.944604			
141	6751	6	18.228245			
141	6751	7	18.460892			
141	6751	8	25.130278			
141	6751	9	21.166885			
141	6751	10	21.942651			
141	6752	1	22.804365		SW	BUSH RIVER RD, 6752 (NE) & 6751 (SW)
141	6752	2	27.274729			
141	6752	3	24.81549			
141	6752	4	23.011375			
141	6752	5	23.401116			
141	6752	6	23.996359			
141	6752	7	31.479995			
141	6752	8	25.073563			
141	6752	9	23.078638			
141	6752	10	25.320289			
141	6753	1	103.797274	BUSH RIVER RD	SE	BUSH RIVER RD, 6752 (NE) & 6751 (SW)
141	6753	2	96.725341			
141	6753	3	106.874048			
141	6753	4	105.64221			
141	6753	5	95.837962			
141	6753	6	75.115115			
141	6753	7	76.288135			
141	6753	8	110.073582			
141	6753	9	92.940537			
141	6753	10	76.377411			
141	6780	1	18.809462	BUSH RIVER RD	NW	BUSH RIVER RD, 6752 (NE) & 6751 (SW)
141	6780	2	14.199983			
141	6780	3	12.864337			
141	6780	4	15.28653			
141	6780	5	12.723108			
141	6780	6	13.425441			
141	6780	7	12.861743			
141	6780	8	16.631307			
141	6780	9	16.214488			
141	6780	10	14.968457			
150	6565	1	29.679472	BUSH RIVER RD	SE	BUSH RIVER RD & 6782 (W)
150	6565	2	29.058065			
150	6565	3	30.313137			
150	6565	4	29.821113			
150	6565	5	29.362124			
150	6565	6	31.048603			
150	6565	7	31.542224			
150	6565	8	29.179448			
150	6565	9	29.027465			
150	6565	10	29.620642			
150	6739	1	6.670881	BUSH RIVER RD	W	BUSH RIVER RD & 6782 (W)
150	6739	2	5.835447			
150	6739	3	4.888911			
150	6739	4	6.972985			
150	6739	5	7.216551			

Node	Superlink	Run	Average Control Delay	Approach Street Name	Direction	Intersection
150	6739	6	6.515742			
150	6739	7	7.343901			
150	6739	8	6.381767			
150	6739	9	7.622279			
150	6739	10	6.822878			
151	6554	1	30.38366		NW	6782 (E), 6554 (SE) & BUSH RIVER RD
151	6554	2	28.341281			
151	6554	3	28.888726			
151	6554	4	28.554627			
151	6554	5	27.893815			
151	6554	6	31.646622			
151	6554	7	29.374504			
151	6554	8	29.665229			
151	6554	9	29.267797			
151	6554	10	28.730538			
151	6782	1	0		W	6782 (E), 6554 (SE) & BUSH RIVER RD
151	6782	2	0			
151	6782	3	0			
151	6782	4	0			
151	6782	5	0			
151	6782	6	0			
151	6782	7	0			
151	6782	8	0			
151	6782	9	0			
151	6782	10	0			
100000093	4299	1	26.05998	RAMP	SW	SUNSET BLVD & RAMP
100000093	4299	2	23.788127			
100000093	4299	3	24.266479			
100000093	4299	4	24.469471			
100000093	4299	5	25.727979			
100000093	4299	6	24.205101			
100000093	4299	7	23.556573			
100000093	4299	8	26.943415			
100000093	4299	9	25.854649			
100000093	4299	10	26.554112			
100000093	4949	1	23.935976	SUNSET BLVD	E	SUNSET BLVD & RAMP
100000093	4949	2	24.726998			
100000093	4949	3	21.590284			
100000093	4949	4	22.501711			
100000093	4949	5	22.509526			
100000093	4949	6	22.628348			
100000093	4949	7	23.605662			
100000093	4949	8	22.056846			
100000093	4949	9	22.586827			
100000093	4949	10	22.655751			
100000093	4950	1	0.025245	SUNSET BLVD	W	SUNSET BLVD & RAMP
100000093	4950	2	0.055429			
100000093	4950	3	0.066204			
100000093	4950	4	0.039683			
100000093	4950	5	0.067949			
100000093	4950	6	0.06279			
100000093	4950	7	0.005553			
100000093	4950	8	0.004306			
100000093	4950	9	0.004389			
100000093	4950	10	0.012496			
100000120	5030	1	86.645472	SUNSET BLVD	W	CORLEY MILL RD, SUNSET BLVD & GINNY LN
100000120	5030	2	89.136684			
100000120	5030	3	86.266022			
100000120	5030	4	80.404122			
100000120	5030	5	93.877423			
100000120	5030	6	76.743704			
100000120	5030	7	69.931847			
100000120	5030	8	71.689599			
100000120	5030	9	84.409938			
100000120	5030	10	87.798325			
100000120	5352	1	82.260348	CORLEY MILL RD	S	CORLEY MILL RD, SUNSET BLVD & GINNY LN
100000120	5352	2	80.944156			
100000120	5352	3	70.129323			
100000120	5352	4	98.53115			
100000120	5352	5	75.957576			
100000120	5352	6	77.030962			
100000120	5352	7	79.533806			
100000120	5352	8	78.098759			
100000120	5352	9	75.603495			
100000120	5352	10	93.318806			
100000120	5353	1	50.675831	GINNY LN	N	CORLEY MILL RD, SUNSET BLVD & GINNY LN
100000120	5353	2	57.464766			
100000120	5353	3	53.843858			
100000120	5353	4	67.419248			
100000120	5353	5	63.412017			
100000120	5353	6	59.501518			
100000120	5353	7	48.895701			
100000120	5353	8	61.225762			
100000120	5353	9	58.253581			
100000120	5353	10	57.649576			
100000120	5355	1	55.185453	SUNSET BLVD	E	CORLEY MILL RD, SUNSET BLVD & GINNY LN
100000120	5355	2	51.116209			
100000120	5355	3	104.728123			
100000120	5355	4	52.562665			
100000120	5355	5	59.415916			
100000120	5355	6	53.637417			
100000120	5355	7	47.533022			
100000120	5355	8	57.702779			
100000120	5355	9	103.312127			
100000120	5355	10	77.36249			
100000134	2052	1	18.605467	RAMP	SW	SUNSET BLVD & RAMP
100000134	2052	2	16.700421			
100000134	2052	3	17.403472			
100000134	2052	4	16.982033			
100000134	2052	5	17.337703			
100000134	2052	6	17.483229			
100000134	2052	7	20.053644			
100000134	2052	8	18.16862			
100000134	2052	9	19.027823			
100000134	2052	10	19.288327			
100000134	5022	1	8.130722	SUNSET BLVD	NW	SUNSET BLVD & RAMP
100000134	5022	2	13.34944			
100000134	5022	3	12.730786			
100000134	5022	4	11.206736			
100000134	5022	5	10.718791			
100000134	5022	6	9.604598			
100000134	5022	7	11.769415			
100000134	5022	8	8.377019			
100000134	5022	9	8.619275			
100000134	5022	10	9.462121			

Node	Superlink	Run	Average Control Delay	Approach Street Name	Direction	Intersection
100000134	5030	1	21.91993	SUNSET BLVD	SE	SUNSET BLVD & RAMP
100000134	5030	2	20.332103			
100000134	5030	3	20.626047			
100000134	5030	4	20.149829			
100000134	5030	5	21.157704			
100000134	5030	6	23.677888			
100000134	5030	7	20.190184			
100000134	5030	8	21.279618			
100000134	5030	9	25.191192			
100000134	5030	10	24.580885			
100000135	2039	1	16.766085	RAMP	NE	SUNSET BLVD & RAMP
100000135	2039	2	14.627067			
100000135	2039	3	19.329061			
100000135	2039	4	19.353393			
100000135	2039	5	20.544135			
100000135	2039	6	17.688926			
100000135	2039	7	18.237124			
100000135	2039	8	16.528121			
100000135	2039	9	18.129121			
100000135	2039	10	15.076516			
100000135	5021	1	6.299153	SUNSET BLVD	NW	SUNSET BLVD & RAMP
100000135	5021	2	5.435753			
100000135	5021	3	6.884496			
100000135	5021	4	6.479248			
100000135	5021	5	7.9708			
100000135	5021	6	6.431017			
100000135	5021	7	6.959868			
100000135	5021	8	5.776557			
100000135	5021	9	7.269579			
100000135	5021	10	6.479118			
100000135	5022	1	17.432545	SUNSET BLVD	SE	SUNSET BLVD & RAMP
100000135	5022	2	28.331202			
100000135	5022	3	12.287893			
100000135	5022	4	15.477491			
100000135	5022	5	17.429953			
100000135	5022	6	39.465774			
100000135	5022	7	19.629236			
100000135	5022	8	23.683656			
100000135	5022	9	40.330044			
100000135	5022	10	33.359547			
100000136	5021	1	33.111839	SUNSET BLVD	SE	SUNSET BLVD, CROMER RD & DAVEGA DR
100000136	5021	2	42.123569			
100000136	5021	3	30.767428			
100000136	5021	4	29.621423			
100000136	5021	5	34.48623			
100000136	5021	6	39.736542			
100000136	5021	7	32.499259			
100000136	5021	8	36.190099			
100000136	5021	9	39.082385			
100000136	5021	10	38.26264			
100000136	5362	1	95.352772	CROMER RD	NE	SUNSET BLVD, CROMER RD & DAVEGA DR
100000136	5362	2	95.542454			
100000136	5362	3	114.9721			
100000136	5362	4	106.174981			
100000136	5362	5	146.692895			
100000136	5362	6	127.548798			
100000136	5362	7	164.511336			
100000136	5362	8	147.579816			
100000136	5362	9	135.080596			
100000136	5362	10	87.411552			
100000136	5364	1	35.921996	SUNSET BLVD	NW	SUNSET BLVD, CROMER RD & DAVEGA DR
100000136	5364	2	49.552077			
100000136	5364	3	47.457952			
100000136	5364	4	39.791927			
100000136	5364	5	36.074104			
100000136	5364	6	52.439835			
100000136	5364	7	36.273578			
100000136	5364	8	39.116293			
100000136	5364	9	36.544986			
100000136	5364	10	33.10469			
100000136	6459	1	23.791063	DAVEGA DR	SW	SUNSET BLVD, CROMER RD & DAVEGA DR
100000136	6459	2	22.52177			
100000136	6459	3	23.383205			
100000136	6459	4	31.857159			
100000136	6459	5	19.683571			
100000136	6459	6	34.107365			
100000136	6459	7	17.421292			
100000136	6459	8	26.453819			
100000136	6459	9	22.440607			
100000136	6459	10	23.619902			
100000144	5376	1	51.393858	SUNSET BLVD	E	W. HOSPITAL DR, SUNSET BLVD & SUNSET CT
100000144	5376	2	89.914103			
100000144	5376	3	40.460902			
100000144	5376	4	49.692516			
100000144	5376	5	34.348044			
100000144	5376	6	46.31919			
100000144	5376	7	48.039051			
100000144	5376	8	56.446413			
100000144	5376	9	29.657423			
100000144	5376	10	54.857311			
100000144	6760	1	60.462546	W. HOSPITAL DR	S	W. HOSPITAL DR, SUNSET BLVD & SUNSET CT
100000144	6760	2	70.532227			
100000144	6760	3	60.483987			
100000144	6760	4	54.375774			
100000144	6760	5	53.372749			
100000144	6760	6	59.972804			
100000144	6760	7	63.453649			
100000144	6760	8	54.623807			
100000144	6760	9	61.38482			
100000144	6760	10	60.963549			
100000144	6761	1		SUNSET CT	N	W. HOSPITAL DR, SUNSET BLVD & SUNSET CT
100000144	6761	2				
100000144	6761	3				
100000144	6761	4				
100000144	6761	5				
100000144	6761	6				
100000144	6761	7				
100000144	6761	8				
100000144	6761	9				
100000144	6761	10				
100000144	6762	1	3.296459	SUNSET BLVD	W	W. HOSPITAL DR, SUNSET BLVD & SUNSET CT
100000144	6762	2	3.113277			
100000144	6762	3	4.622277			
100000144	6762	4	2.058287			
100000144	6762	5	4.679766			

Node	Superlink	Run	Average Control Delay	Approach Street Name	Direction	Intersection
100000144	6762	6	3.368158			
100000144	6762	7	2.894059			
100000144	6762	8	1.581337			
100000144	6762	9	2.338282			
100000144	6762	10	4.17245			
100000150	3361	1	30.419369	I-26 EB EXIT 101 OFF RAMP	SW	I-26 EB EXIT 101 OFF RAMP & BROAD RIVER RD
100000150	3361	2	60.129097			
100000150	3361	3	23.472244			
100000150	3361	4	29.434179			
100000150	3361	5	81.573396			
100000150	3361	6	31.444238			
100000150	3361	7	28.889383			
100000150	3361	8	30.718703			
100000150	3361	9	49.684555			
100000150	3361	10	24.964868			
100000150	5071	1	0	BROAD RIVER RD	E	I-26 EB EXIT 101 OFF RAMP & BROAD RIVER RD
100000150	5071	2	0			
100000150	5071	3	0			
100000150	5071	4	0			
100000150	5071	5	0			
100000150	5071	6	0			
100000150	5071	7	0			
100000150	5071	8	0			
100000150	5071	9	0			
100000150	5071	10	0			
100000150	5073	1	0.052453	BROAD RIVER RD	W	I-26 EB EXIT 101 OFF RAMP & BROAD RIVER RD
100000150	5073	2	0.060931			
100000150	5073	3	0.107924			
100000150	5073	4	0.040366			
100000150	5073	5	0.063341			
100000150	5073	6	0.053537			
100000150	5073	7	0.07655			
100000150	5073	8	0.069221			
100000150	5073	9	0.066641			
100000150	5073	10	0.062874			
100000151	5072	1	3.232356	BROAD RIVER RD	E	BROAD RIVER RD & I-26 EB EXIT 101 ON RAMP
100000151	5072	2	3.345499			
100000151	5072	3	3.494071			
100000151	5072	4	3.677546			
100000151	5072	5	3.950984			
100000151	5072	6	4.241951			
100000151	5072	7	3.172921			
100000151	5072	8	2.639824			
100000151	5072	9	3.846492			
100000151	5072	10	3.485731			
100000151	5075	1	5.325179	BROAD RIVER RD	W	BROAD RIVER RD & I-26 EB EXIT 101 ON RAMP
100000151	5075	2	5.73204			
100000151	5075	3	5.458714			
100000151	5075	4	5.965823			
100000151	5075	5	5.4508			
100000151	5075	6	6.187288			
100000151	5075	7	5.936745			
100000151	5075	8	5.385121			
100000151	5075	9	5.935082			
100000151	5075	10	5.017442			
100000163	4947	1	6.588529	SUNSET BLVD	E	MCSWAIN DR, SUNSET BLVD & CHRIS DR
100000163	4947	2	7.271765			
100000163	4947	3	7.840548			
100000163	4947	4	7.614224			
100000163	4947	5	7.368878			
100000163	4947	6	7.900048			
100000163	4947	7	7.647177			
100000163	4947	8	8.082997			
100000163	4947	9	7.623893			
100000163	4947	10	7.086496			
100000163	5388	1	5.356822	SUNSET BLVD	NW	MCSWAIN DR, SUNSET BLVD & CHRIS DR
100000163	5388	2	6.629247			
100000163	5388	3	6.654092			
100000163	5388	4	6.99644			
100000163	5388	5	6.360333			
100000163	5388	6	6.955212			
100000163	5388	7	6.545001			
100000163	5388	8	6.838461			
100000163	5388	9	9.640684			
100000163	5388	10	6.456326			
100000163	5389	1	18.077694	MCSWAIN DR	S	MCSWAIN DR, SUNSET BLVD & CHRIS DR
100000163	5389	2	20.98218			
100000163	5389	3	19.658902			
100000163	5389	4	23.066048			
100000163	5389	5	22.39984			
100000163	5389	6	23.371937			
100000163	5389	7	19.098492			
100000163	5389	8	19.477936			
100000163	5389	9	22.011181			
100000163	5389	10	20.476416			
100000163	5418	1	62.41899	CHRIS DR	N	MCSWAIN DR, SUNSET BLVD & CHRIS DR
100000163	5418	2	78.953625			
100000163	5418	3	90.527274			
100000163	5418	4	80.394766			
100000163	5418	5	76.658544			
100000163	5418	6	81.289625			
100000163	5418	7	70.217564			
100000163	5418	8	72.938651			
100000163	5418	9	78.739365			
100000163	5418	10	95.759017			
100000165	5102	1	11.08697	HARBISON BLVD	SW	HARBISON BLVD & WOODCROSS DR
100000165	5102	2	10.231264			
100000165	5102	3	12.920106			
100000165	5102	4	12.232839			
100000165	5102	5	12.190271			
100000165	5102	6	10.324742			
100000165	5102	7	12.574999			
100000165	5102	8	13.022098			
100000165	5102	9	11.342831			
100000165	5102	10	13.158458			
100000165	5103	1	43.870029	WOODCROSS DR	NW	HARBISON BLVD & WOODCROSS DR
100000165	5103	2	45.612608			
100000165	5103	3	46.916165			
100000165	5103	4	44.308477			
100000165	5103	5	42.95577			
100000165	5103	6	46.083957			
100000165	5103	7	45.914024			
100000165	5103	8	47.053224			
100000165	5103	9	48.741571			
100000165	5103	10	43.402197			

Node	Superlink	Run	Average Control Delay	Approach Street Name	Direction	Intersection
100000165	6719	1	3.949636	HARBISON BLVD	NE	HARBISON BLVD & WOODCROSS DR
100000165	6719	2	4.103955			
100000165	6719	3	4.984603			
100000165	6719	4	5.175528			
100000165	6719	5	4.504053			
100000165	6719	6	4.167642			
100000165	6719	7	4.460485			
100000165	6719	8	3.957135			
100000165	6719	9	4.926276			
100000165	6719	10	4.92899			
100000168	5364	1	16.041454	SUNSET BLVD	E	SUNSET BLVD & LEAPHART RD
100000168	5364	2	15.787035			
100000168	5364	3	13.522824			
100000168	5364	4	13.428239			
100000168	5364	5	11.471163			
100000168	5364	6	15.388615			
100000168	5364	7	12.061749			
100000168	5364	8	19.080414			
100000168	5364	9	13.198399			
100000168	5364	10	9.396929			
100000168	5366	1	74.976449	LEAPHART RD	N	SUNSET BLVD & LEAPHART RD
100000168	5366	2	72.80384			
100000168	5366	3	66.464301			
100000168	5366	4	82.78346			
100000168	5366	5	65.044187			
100000168	5366	6	72.248262			
100000168	5366	7	76.380423			
100000168	5366	8	67.845031			
100000168	5366	9	61.570097			
100000168	5366	10	71.272925			
100000168	5372	1	10.972875	SUNSET BLVD	W	SUNSET BLVD & LEAPHART RD
100000168	5372	2	10.0073			
100000168	5372	3	10.886109			
100000168	5372	4	9.545296			
100000168	5372	5	10.977778			
100000168	5372	6	10.187932			
100000168	5372	7	9.483907			
100000168	5372	8	9.065305			
100000168	5372	9	11.350845			
100000168	5372	10	11.192194			
100000174	3229	1	22.630471	I-26 EB EXIT 104 OFF RAMP	SE	PINEY GROVE RD, I-26 EB EXIT 104 OFF RAMP & I-26 EB EXIT 104 ON RAMP
100000174	3229	2	23.863135			
100000174	3229	3	22.352127			
100000174	3229	4	25.678684			
100000174	3229	5	22.50718			
100000174	3229	6	24.812792			
100000174	3229	7	22.977868			
100000174	3229	8	23.057461			
100000174	3229	9	24.061741			
100000174	3229	10	24.646727			
100000174	5112	1	13.330819	PINEY GROVE RD	W	PINEY GROVE RD, I-26 EB EXIT 104 OFF RAMP & I-26 EB EXIT 104 ON RAMP
100000174	5112	2	14.595468			
100000174	5112	3	11.519168			
100000174	5112	4	12.765576			
100000174	5112	5	13.368414			
100000174	5112	6	12.391895			
100000174	5112	7	11.844197			
100000174	5112	8	14.688852			
100000174	5112	9	14.711086			
100000174	5112	10	11.245554			
100000174	6660	1	7.817404	PINEY GROVE RD	E	PINEY GROVE RD, I-26 EB EXIT 104 OFF RAMP & I-26 EB EXIT 104 ON RAMP
100000174	6660	2	6.324851			
100000174	6660	3	6.163905			
100000174	6660	4	6.566954			
100000174	6660	5	7.485304			
100000174	6660	6	6.238243			
100000174	6660	7	7.291969			
100000174	6660	8	6.748994			
100000174	6660	9	6.447036			
100000174	6660	10	6.214487			
100000177	5112	1	11.841033	PINEY GROVE RD	E	PINEY GROVE RD, I-26 WB EXIT 104 OFF RAMP & I-26 WB EXIT 104 ON RAMP
100000177	5112	2	11.322695			
100000177	5112	3	10.976431			
100000177	5112	4	11.451754			
100000177	5112	5	9.218192			
100000177	5112	6	11.025093			
100000177	5112	7	11.712548			
100000177	5112	8	8.740061			
100000177	5112	9	10.996482			
100000177	5112	10	10.991993			
100000177	6514	1	33.213996	I-26 WB EXIT 104 OFF RAMP	N	PINEY GROVE RD, I-26 WB EXIT 104 OFF RAMP & I-26 WB EXIT 104 ON RAMP
100000177	6514	2	43.623024			
100000177	6514	3	32.332391			
100000177	6514	4	35.484911			
100000177	6514	5	32.809218			
100000177	6514	6	41.851044			
100000177	6514	7	47.743475			
100000177	6514	8	32.2948			
100000177	6514	9	37.021029			
100000177	6514	10	38.45558			
100000177	6662	1	34.598226	PINEY GROVE RD	W	PINEY GROVE RD, I-26 WB EXIT 104 OFF RAMP & I-26 WB EXIT 104 ON RAMP
100000177	6662	2	31.216091			
100000177	6662	3	33.468888			
100000177	6662	4	33.82514			
100000177	6662	5	35.124414			
100000177	6662	6	31.882903			
100000177	6662	7	33.319635			
100000177	6662	8	29.197869			
100000177	6662	9	31.354671			
100000177	6662	10	31.832274			
100000182	5117	1	0	ST ANDREWS RD	SW	ST ANDREWS RD & 6774 (S)
100000182	5117	2	0			
100000182	5117	3	0			
100000182	5117	4	0			
100000182	5117	5	0			
100000182	5117	6	0			
100000182	5117	7	0			
100000182	5117	8	0			
100000182	5117	9	0			
100000182	5117	10	0			
100000182	6737	1	0	ST ANDREWS RD	NE	ST ANDREWS RD & 6774 (S)
100000182	6737	2	0			
100000182	6737	3	0			
100000182	6737	4	0			
100000182	6737	5	0			

Node	Superlink	Run	Average Control Delay	Approach Street Name	Direction	Intersection
100000182	6737	6	0			
100000182	6737	7	0			
100000182	6737	8	0			
100000182	6737	9	0			
100000182	6737	10	0			
100000182	6774	1	124.040285		NE	ST ANDREWS RD & 6774 (S)
100000182	6774	2	139.046695			
100000182	6774	3	145.591563			
100000182	6774	4	132.638155			
100000182	6774	5	96.651222			
100000182	6774	6	99.978065			
100000182	6774	7	90.066195			
100000182	6774	8	145.43617			
100000182	6774	9	106.354561			
100000182	6774	10	123.079539			
100000184	5499	1	13.015355	N ARROWWOOD RD	S	ARROWWOOD RD, BUSH RIVER RD & N ARROWWOOD RD
100000184	5499	2	13.923564			
100000184	5499	3	16.093189			
100000184	5499	4	11.292502			
100000184	5499	5	14.832146			
100000184	5499	6	13.131218			
100000184	5499	7	13.088501			
100000184	5499	8	14.586428			
100000184	5499	9	13.640772			
100000184	5499	10	12.945718			
100000184	5500	1	29.264481	ARROWWOOD RD	N	ARROWWOOD RD, BUSH RIVER RD & N ARROWWOOD RD
100000184	5500	2	30.836667			
100000184	5500	3	32.790823			
100000184	5500	4	30.424544			
100000184	5500	5	30.609017			
100000184	5500	6	30.003255			
100000184	5500	7	31.484983			
100000184	5500	8	30.295901			
100000184	5500	9	27.917423			
100000184	5500	10	27.836161			
100000184	6497	1	3.02808	BUSH RIVER RD	W	ARROWWOOD RD, BUSH RIVER RD & N ARROWWOOD RD
100000184	6497	2	6.341848			
100000184	6497	3	5.357778			
100000184	6497	4	6.77838			
100000184	6497	5	6.053127			
100000184	6497	6	10.398725			
100000184	6497	7	5.798887			
100000184	6497	8	5.114259			
100000184	6497	9	5.22404			
100000184	6497	10	5.899813			
100000184	6505	1	9.688843	BUSH RIVER RD	E	ARROWWOOD RD, BUSH RIVER RD & N ARROWWOOD RD
100000184	6505	2	12.003449			
100000184	6505	3	12.206209			
100000184	6505	4	12.980332			
100000184	6505	5	10.919349			
100000184	6505	6	11.374154			
100000184	6505	7	11.651292			
100000184	6505	8	11.287454			
100000184	6505	9	10.453376			
100000184	6505	10	10.956733			
100000185	3232	1	7.256104	RAMP	W	GREYSTONE BLVD & RAMP
100000185	3232	2	5.326827			
100000185	3232	3	3.951773			
100000185	3232	4	5.206456			
100000185	3232	5	5.97415			
100000185	3232	6	4.74996			
100000185	3232	7	8.143897			
100000185	3232	8	7.882371			
100000185	3232	9	5.672753			
100000185	3232	10	5.488891			
100000185	5140	1	0.503453	GREYSTONE BLVD	N	GREYSTONE BLVD & RAMP
100000185	5140	2	0.206481			
100000185	5140	3	0.240538			
100000185	5140	4	0.330105			
100000185	5140	5	0.21225			
100000185	5140	6	0.125348			
100000185	5140	7	0.209233			
100000185	5140	8	0.201442			
100000185	5140	9	0.302887			
100000185	5140	10	0.409006			
100000185	5143	1	5.499339	GREYSTONE BLVD	S	GREYSTONE BLVD & RAMP
100000185	5143	2	4.497665			
100000185	5143	3	3.691843			
100000185	5143	4	3.861703			
100000185	5143	5	3.441932			
100000185	5143	6	3.702391			
100000185	5143	7	5.010876			
100000185	5143	8	12.662003			
100000185	5143	9	4.880814			
100000185	5143	10	5.037413			
100000186	4949	1	18.580969	SUNSET BLVD	W	HARBOR DR, SUNSET BLVD & E HOSPITAL DR
100000186	4949	2	17.917919			
100000186	4949	3	17.292044			
100000186	4949	4	18.62615			
100000186	4949	5	19.879595			
100000186	4949	6	19.497834			
100000186	4949	7	15.408206			
100000186	4949	8	18.036116			
100000186	4949	9	18.212271			
100000186	4949	10	18.493631			
100000186	5386	1	120.594774	HARBOR DR	N	HARBOR DR, SUNSET BLVD & E HOSPITAL DR
100000186	5386	2	259.574292			
100000186	5386	3	148.995528			
100000186	5386	4	329.619164			
100000186	5386	5	219.64443			
100000186	5386	6	200.904404			
100000186	5386	7	156.168874			
100000186	5386	8	94.922039			
100000186	5386	9	111.989742			
100000186	5386	10	95.390726			
100000186	5387	1	61.253669	E HOSPITAL DR	S	HARBOR DR, SUNSET BLVD & E HOSPITAL DR
100000186	5387	2	72.439621			
100000186	5387	3	65.405857			
100000186	5387	4	62.192547			
100000186	5387	5	65.407762			
100000186	5387	6	66.682876			
100000186	5387	7	56.888282			
100000186	5387	8	69.249807			
100000186	5387	9	65.069875			
100000186	5387	10	57.902308			

Node	Superlink	Run	Average Control Delay	Approach Street Name	Direction	Intersection
100000186	6762	1	58.745468	SUNSET BLVD	E	HARBOR DR, SUNSET BLVD & E HOSPITAL DR
100000186	6762	2	69.409668			
100000186	6762	3	48.923771			
100000186	6762	4	55.793584			
100000186	6762	5	44.085133			
100000186	6762	6	54.998142			
100000186	6762	7	60.277725			
100000186	6762	8	53.649947			
100000186	6762	9	47.234601			
100000186	6762	10	47.980946			
100000187	6057	1	13.026271	BROAD RIVER RD	NW	BROAD RIVER RD, BRIARGATE CIR & MARLEY DR
100000187	6057	2	9.57621			
100000187	6057	3	10.572648			
100000187	6057	4	11.202243			
100000187	6057	5	10.656073			
100000187	6057	6	9.424397			
100000187	6057	7	11.912403			
100000187	6057	8	10.489537			
100000187	6057	9	13.112989			
100000187	6057	10	9.414912			
100000187	6059	1	21.276088	BROAD RIVER RD	SE	BROAD RIVER RD, BRIARGATE CIR & MARLEY DR
100000187	6059	2	17.62498			
100000187	6059	3	19.107531			
100000187	6059	4	19.256268			
100000187	6059	5	18.992542			
100000187	6059	6	17.928642			
100000187	6059	7	21.288642			
100000187	6059	8	16.609862			
100000187	6059	9	17.924119			
100000187	6059	10	21.716419			
100000187	6060	1	66.236089	MARLEY DR	SW	BROAD RIVER RD, BRIARGATE CIR & MARLEY DR
100000187	6060	2	77.561277			
100000187	6060	3	61.671606			
100000187	6060	4	66.108194			
100000187	6060	5	71.904572			
100000187	6060	6	57.201585			
100000187	6060	7	59.532782			
100000187	6060	8	95.198314			
100000187	6060	9	86.082983			
100000187	6060	10	83.161803			
100000187	6061	1	29.781973	BRIARGATE CIR	NE	BROAD RIVER RD, BRIARGATE CIR & MARLEY DR
100000187	6061	2	28.927626			
100000187	6061	3	30.493076			
100000187	6061	4	22.687354			
100000187	6061	5	30.018003			
100000187	6061	6	27.863814			
100000187	6061	7	28.599358			
100000187	6061	8	32.268503			
100000187	6061	9	35.65065			
100000187	6061	10	24.716231			
100000188	3222	1	5.188242	RAMP	W	GREYSTONE BLVD & RAMP
100000188	3222	2	12.820372			
100000188	3222	3	4.79168			
100000188	3222	4	5.275846			
100000188	3222	5	5.516218			
100000188	3222	6	5.172219			
100000188	3222	7	6.003485			
100000188	3222	8	3.807163			
100000188	3222	9	4.290476			
100000188	3222	10	3.771021			
100000188	5139	1	0.932667	GREYSTONE BLVD	S	GREYSTONE BLVD & RAMP
100000188	5139	2	1.045162			
100000188	5139	3	1.029554			
100000188	5139	4	0.821629			
100000188	5139	5	1.675566			
100000188	5139	6	1.028573			
100000188	5139	7	1.656797			
100000188	5139	8	1.192887			
100000188	5139	9	1.44906			
100000188	5139	10	1.290255			
100000188	5143	1	0.694016	GREYSTONE BLVD	N	GREYSTONE BLVD & RAMP
100000188	5143	2	0.654248			
100000188	5143	3	0.615651			
100000188	5143	4	0.590442			
100000188	5143	5	0.557965			
100000188	5143	6	0.574131			
100000188	5143	7	0.697237			
100000188	5143	8	0.458452			
100000188	5143	9	0.854316			
100000188	5143	10	0.63015			
100000190	5148	1	0	BROAD RIVER RD	SE	BROAD RIVER RD, EXIT 65 RAMP TO US 176 & 6579 (NE)
100000190	5148	2	0			
100000190	5148	3	0			
100000190	5148	4	0			
100000190	5148	5	0			
100000190	5148	6	0			
100000190	5148	7	0			
100000190	5148	8	0			
100000190	5148	9	0			
100000190	5148	10	0			
100000190	6445	1	3.048095	BROAD RIVER RD	NW	BROAD RIVER RD, EXIT 65 RAMP TO US 176 & 6579 (NE)
100000190	6445	2	1.719966			
100000190	6445	3	2.27567			
100000190	6445	4	2.21321			
100000190	6445	5	2.320041			
100000190	6445	6	2.134252			
100000190	6445	7	2.424637			
100000190	6445	8	2.79435			
100000190	6445	9	2.600291			
100000190	6445	10	1.517049			
100000190	6574	1	25.208941	EXIT 65 RAMP TO US 176	E	BROAD RIVER RD, EXIT 65 RAMP TO US 176 & 6579 (NE)
100000190	6574	2	27.432122			
100000190	6574	3	26.01885			
100000190	6574	4	29.307114			
100000190	6574	5	31.410334			
100000190	6574	6	25.196767			
100000190	6574	7	26.832962			
100000190	6574	8	28.930698			
100000190	6574	9	28.309241			
100000190	6574	10	25.841125			
100000195	6049	1	13.758666	BROAD RIVER RD	NW	LONGCREEK DR & BROAD RIVER RD
100000195	6049	2	14.275828			
100000195	6049	3	11.982265			
100000195	6049	4	12.078307			
100000195	6049	5	13.633654			

Node	Superlink	Run	Average Control Delay	Approach Street Name	Direction	Intersection
100000195	6049	6	12.517188			
100000195	6049	7	11.88817			
100000195	6049	8	12.845526			
100000195	6049	9	14.139829			
100000195	6049	10	9.811978			
100000195	6052	1	37.373738	LONGCREEK DR	SW	LONGCREEK DR & BROAD RIVER RD
100000195	6052	2	39.367098			
100000195	6052	3	37.614491			
100000195	6052	4	36.82921			
100000195	6052	5	41.88469			
100000195	6052	6	34.037122			
100000195	6052	7	30.324845			
100000195	6052	8	37.803138			
100000195	6052	9	37.434366			
100000195	6052	10	42.579317			
100000195	6445	1	8.222224	BROAD RIVER RD	SE	LONGCREEK DR & BROAD RIVER RD
100000195	6445	2	9.425937			
100000195	6445	3	9.67262			
100000195	6445	4	7.91822			
100000195	6445	5	8.881177			
100000195	6445	6	8.626511			
100000195	6445	7	6.6434			
100000195	6445	8	8.656788			
100000195	6445	9	9.341827			
100000195	6445	10	9.002681			
100000252	5125	1	46.060187	BUSH RIVER RD	E	MORNINGHILL DR, BUSH RIVER RD & RAMP
100000252	5125	2	32.770646			
100000252	5125	3	38.294377			
100000252	5125	4	46.884909			
100000252	5125	5	49.566601			
100000252	5125	6	58.177384			
100000252	5125	7	39.6323			
100000252	5125	8	37.420599			
100000252	5125	9	37.886369			
100000252	5125	10	45.183003			
100000252	5487	1	40.707783	MORNINGHILL DR	S	MORNINGHILL DR, BUSH RIVER RD & RAMP
100000252	5487	2	38.30767			
100000252	5487	3	36.31012			
100000252	5487	4	37.259705			
100000252	5487	5	43.526536			
100000252	5487	6	45.385525			
100000252	5487	7	43.379442			
100000252	5487	8	41.670346			
100000252	5487	9	40.066191			
100000252	5487	10	40.165846			
100000252	5488	1		RAMP	N	MORNINGHILL DR, BUSH RIVER RD & RAMP
100000252	5488	2				
100000252	5488	3				
100000252	5488	4				
100000252	5488	5				
100000252	5488	6				
100000252	5488	7				
100000252	5488	8				
100000252	5488	9				
100000252	5488	10				
100000252	6505	1	22.135328	BUSH RIVER RD	W	MORNINGHILL DR, BUSH RIVER RD & RAMP
100000252	6505	2	26.842981			
100000252	6505	3	22.923219			
100000252	6505	4	21.83488			
100000252	6505	5	20.957664			
100000252	6505	6	25.072759			
100000252	6505	7	20.762141			
100000252	6505	8	20.789614			
100000252	6505	9	24.435638			
100000252	6505	10	23.477608			
100000254	5119	1	0	WOODLAND HILLS RD	S	WOODLAND HILLS RD & FRONTAGE RD
100000254	5119	2	0			
100000254	5119	3	0.001213			
100000254	5119	4	0			
100000254	5119	5	0			
100000254	5119	6	0			
100000254	5119	7	0			
100000254	5119	8	0			
100000254	5119	9	0			
100000254	5119	10	0			
100000254	5607	1	39.253615	WOODLAND HILLS RD	N	WOODLAND HILLS RD & FRONTAGE RD
100000254	5607	2	23.513198			
100000254	5607	3	25.311219			
100000254	5607	4	19.232473			
100000254	5607	5	23.45117			
100000254	5607	6	20.760734			
100000254	5607	7	20.040189			
100000254	5607	8	17.747294			
100000254	5607	9	43.556322			
100000254	5607	10	19.782303			
100000254	6538	1		FRONTAGE RD	W	WOODLAND HILLS RD & FRONTAGE RD
100000254	6538	2				
100000254	6538	3				
100000254	6538	4				
100000254	6538	5				
100000254	6538	6				
100000254	6538	7				
100000254	6538	8				
100000254	6538	9				
100000254	6538	10				
100000255	5470	1	33.110018	INDEPENDENCE AVE	N	BUSH RIVER RD & INDEPENDENCE AVE
100000255	5470	2	32.158055			
100000255	5470	3	32.836923			
100000255	5470	4	30.935827			
100000255	5470	5	32.699163			
100000255	5470	6	30.212915			
100000255	5470	7	32.664367			
100000255	5470	8	32.009471			
100000255	5470	9	31.302505			
100000255	5470	10	32.06151			
100000255	5471	1	12.877748	BUSH RIVER RD	W	BUSH RIVER RD & INDEPENDENCE AVE
100000255	5471	2	27.962607			
100000255	5471	3	11.607921			
100000255	5471	4	18.954613			
100000255	5471	5	11.113998			
100000255	5471	6	28.427025			
100000255	5471	7	35.88967			
100000255	5471	8	15.260466			
100000255	5471	9	16.070384			
100000255	5471	10	13.517361			

Node	Superlink	Run	Average Control Delay	Approach Street Name	Direction	Intersection
100000255	6740	1	10.795734	BUSH RIVER RD	E	BUSH RIVER RD & INDEPENDENCE AVE
100000255	6740	2	10.452025			
100000255	6740	3	9.71136			
100000255	6740	4	10.52305			
100000255	6740	5	9.64069			
100000255	6740	6	9.868957			
100000255	6740	7	11.139043			
100000255	6740	8	10.721972			
100000255	6740	9	10.569079			
100000255	6740	10	9.809098			
100000256	5131	1	8.166568	BUSH RIVER RD	W	BUSH RIVER RD & ZIMALCREST DR
100000256	5131	2	10.978908			
100000256	5131	3	8.596475			
100000256	5131	4	9.818108			
100000256	5131	5	8.729914			
100000256	5131	6	9.800539			
100000256	5131	7	9.330836			
100000256	5131	8	10.190538			
100000256	5131	9	9.549211			
100000256	5131	10	7.439367			
100000256	5465	1	5.542888	BUSH RIVER RD	E	BUSH RIVER RD & ZIMALCREST DR
100000256	5465	2	5.21545			
100000256	5465	3	4.586145			
100000256	5465	4	4.64044			
100000256	5465	5	4.722486			
100000256	5465	6	6.382766			
100000256	5465	7	6.170814			
100000256	5465	8	5.416646			
100000256	5465	9	4.632525			
100000256	5465	10	5.073431			
100000256	5484	1	44.95863	ZIMALCREST DR	S	BUSH RIVER RD & ZIMALCREST DR
100000256	5484	2	45.394917			
100000256	5484	3	45.744006			
100000256	5484	4	35.284976			
100000256	5484	5	39.314575			
100000256	5484	6	43.495294			
100000256	5484	7	38.680901			
100000256	5484	8	36.627976			
100000256	5484	9	45.042801			
100000256	5484	10	34.409615			
100000256	5485	1	8.979264	ZIMALCREST DR	N	BUSH RIVER RD & ZIMALCREST DR
100000256	5485	2	7.278821			
100000256	5485	3	8.262114			
100000256	5485	4	7.560028			
100000256	5485	5	8.035547			
100000256	5485	6	9.481297			
100000256	5485	7	8.921366			
100000256	5485	8	7.340149			
100000256	5485	9	8.215249			
100000256	5485	10	7.438962			
100000348	5116	1	8.48641	ST ANDREWS RD	NW	ST ANDREWS RD & JAMIL RD
100000348	5116	2	10.001514			
100000348	5116	3	12.507144			
100000348	5116	4	10.3494			
100000348	5116	5	9.582769			
100000348	5116	6	10.519803			
100000348	5116	7	9.328237			
100000348	5116	8	9.903331			
100000348	5116	9	9.827015			
100000348	5116	10	10.260815			
100000348	6114	1	34.943384	ST ANDREWS RD	E	ST ANDREWS RD & JAMIL RD
100000348	6114	2	25.632758			
100000348	6114	3	31.944673			
100000348	6114	4	34.134986			
100000348	6114	5	23.907435			
100000348	6114	6	27.233843			
100000348	6114	7	26.580479			
100000348	6114	8	42.981568			
100000348	6114	9	33.221501			
100000348	6114	10	23.943202			
100000348	6119	1	31.923581	JAMIL RD	S	ST ANDREWS RD & JAMIL RD
100000348	6119	2	35.725942			
100000348	6119	3	36.228581			
100000348	6119	4	34.14799			
100000348	6119	5	31.053625			
100000348	6119	6	32.174721			
100000348	6119	7	32.874257			
100000348	6119	8	37.237185			
100000348	6119	9	38.039177			
100000348	6119	10	33.028727			
100000353	6125	1	24.416259	BOWER PKY	SE	BOWER PKY, PINEY GROVE RD & JAMIL RD
100000353	6125	2	23.817469			
100000353	6125	3	22.310482			
100000353	6125	4	20.521732			
100000353	6125	5	22.442447			
100000353	6125	6	22.702423			
100000353	6125	7	23.280767			
100000353	6125	8	20.352643			
100000353	6125	9	22.621214			
100000353	6125	10	21.803721			
100000353	6126	1	41.621613	PINEY GROVE RD	E	BOWER PKY, PINEY GROVE RD & JAMIL RD
100000353	6126	2	56.625724			
100000353	6126	3	92.831101			
100000353	6126	4	85.488049			
100000353	6126	5	32.165081			
100000353	6126	6	77.377385			
100000353	6126	7	39.51479			
100000353	6126	8	69.037792			
100000353	6126	9	44.094951			
100000353	6126	10	41.791763			
100000353	6127	1	43.282508	JAMIL RD	NW	BOWER PKY, PINEY GROVE RD & JAMIL RD
100000353	6127	2	52.371011			
100000353	6127	3	79.322453			
100000353	6127	4	46.223594			
100000353	6127	5	39.555907			
100000353	6127	6	43.800591			
100000353	6127	7	44.10472			
100000353	6127	8	45.762431			
100000353	6127	9	37.864644			
100000353	6127	10	43.652485			
100000353	6659	1	75.415066	PINEY GROVE RD	W	BOWER PKY, PINEY GROVE RD & JAMIL RD
100000353	6659	2	86.679324			
100000353	6659	3	106.831446			
100000353	6659	4	60.545494			
100000353	6659	5	81.094535			

Node	Superlink	Run	Average Control Delay	Approach Street Name	Direction	Intersection
100000353	6659	6	91.571775			
100000353	6659	7	65.818255			
100000353	6659	8	44.445094			
100000353	6659	9	42.766959			
100000353	6659	10	57.34451			
100000354	6094	1	111.793071	ST ANDREWS RD	SW	ST ANDREWS RD, KAY ST & CHARTWELL RD
100000354	6094	2	35.148088			
100000354	6094	3	86.73873			
100000354	6094	4	35.330168			
100000354	6094	5	27.626696			
100000354	6094	6	35.79035			
100000354	6094	7	31.795439			
100000354	6094	8	64.856			
100000354	6094	9	48.66711			
100000354	6094	10	50.593392			
100000354	6098	1	38.427297	CHARTWELL RD	NW	ST ANDREWS RD, KAY ST & CHARTWELL RD
100000354	6098	2	54.891812			
100000354	6098	3	59.364519			
100000354	6098	4	44.736243			
100000354	6098	5	40.276929			
100000354	6098	6	47.375901			
100000354	6098	7	38.814685			
100000354	6098	8	38.95727			
100000354	6098	9	48.006682			
100000354	6098	10	43.586937			
100000354	6099	1	27.015072	KAY ST	SE	ST ANDREWS RD, KAY ST & CHARTWELL RD
100000354	6099	2	18.370294			
100000354	6099	3	25.49208			
100000354	6099	4	23.216142			
100000354	6099	5	21.960454			
100000354	6099	6	21.474234			
100000354	6099	7	20.78169			
100000354	6099	8	27.385101			
100000354	6099	9	29.638279			
100000354	6099	10	26.170816			
100000354	6100	1	17.537005	ST ANDREWS RD	NE	ST ANDREWS RD, KAY ST & CHARTWELL RD
100000354	6100	2	11.501432			
100000354	6100	3	13.741578			
100000354	6100	4	12.296126			
100000354	6100	5	11.012436			
100000354	6100	6	15.695125			
100000354	6100	7	12.924204			
100000354	6100	8	16.276944			
100000354	6100	9	11.301633			
100000354	6100	10	12.664059			
100000358	5117	1	23.440608	ST ANDREWS RD	NE	ST ANDREWS RD, FERNANDINA RD & BURNING TREE RD
100000358	5117	2	22.173175			
100000358	5117	3	24.236374			
100000358	5117	4	23.858238			
100000358	5117	5	21.998085			
100000358	5117	6	24.174463			
100000358	5117	7	24.36814			
100000358	5117	8	24.970501			
100000358	5117	9	23.109303			
100000358	5117	10	22.712722			
100000358	6100	1	64.95759	ST ANDREWS RD	SW	ST ANDREWS RD, FERNANDINA RD & BURNING TREE RD
100000358	6100	2	52.533726			
100000358	6100	3	59.143319			
100000358	6100	4	51.725362			
100000358	6100	5	44.824899			
100000358	6100	6	50.62446			
100000358	6100	7	49.818788			
100000358	6100	8	55.443734			
100000358	6100	9	56.395943			
100000358	6100	10	55.670607			
100000358	6101	1	23.287411	BURNING TREE RD	NW	ST ANDREWS RD, FERNANDINA RD & BURNING TREE RD
100000358	6101	2	25.232225			
100000358	6101	3	25.423818			
100000358	6101	4	26.579409			
100000358	6101	5	22.944831			
100000358	6101	6	25.795056			
100000358	6101	7	24.562347			
100000358	6101	8	21.871161			
100000358	6101	9	26.782885			
100000358	6101	10	25.145392			
100000358	6102	1	22.013503	FERNANDINA RD	SE	ST ANDREWS RD, FERNANDINA RD & BURNING TREE RD
100000358	6102	2	23.455109			
100000358	6102	3	27.806262			
100000358	6102	4	24.138534			
100000358	6102	5	22.466608			
100000358	6102	6	25.428755			
100000358	6102	7	23.368159			
100000358	6102	8	20.316439			
100000358	6102	9	21.840421			
100000358	6102	10	27.750911			
100000360	6101	1	0	BURNING TREE RD	S	I-26 WB TO BURNING TREE RD EXIT 106 OFF RAMP & BURNING TREE RD
100000360	6101	2	0			
100000360	6101	3	0			
100000360	6101	4	0			
100000360	6101	5	0			
100000360	6101	6	0			
100000360	6101	7	0			
100000360	6101	8	0			
100000360	6101	9	0			
100000360	6101	10	0			
100000360	6105	1	0.007055	BURNING TREE RD	N	I-26 WB TO BURNING TREE RD EXIT 106 OFF RAMP & BURNING TREE RD
100000360	6105	2	0.014256			
100000360	6105	3	0.022883			
100000360	6105	4	0.010754			
100000360	6105	5	0.013753			
100000360	6105	6	0.008719			
100000360	6105	7	0.01205			
100000360	6105	8	0.023607			
100000360	6105	9	0.014976			
100000360	6105	10	0.005394			
100000360	6766	1	25.114485	I-26 WB TO BURNING TREE RD EXIT 106 OFF RAI	NE	I-26 WB TO BURNING TREE RD EXIT 106 OFF RAMP & BURNING TREE RD
100000360	6766	2	15.01447			
100000360	6766	3	16.476938			
100000360	6766	4	17.896014			
100000360	6766	5	13.854165			
100000360	6766	6	23.50185			
100000360	6766	7	23.868168			
100000360	6766	8	20.646307			
100000360	6766	9	14.886161			
100000360	6766	10	20.363657			

Node	Superlink	Run	Average Control Delay	Approach Street Name	Direction	Intersection
100000362	6134	1	17.838758	JAMIL RD	NW	HARBISON BLVD & JAMIL RD
100000362	6134	2	20.057256			
100000362	6134	3	14.346454			
100000362	6134	4	20.203898			
100000362	6134	5	22.349709			
100000362	6134	6	14.795247			
100000362	6134	7	22.597678			
100000362	6134	8	18.965751			
100000362	6134	9	16.79911			
100000362	6134	10	18.968981			
100000362	6137	1	0.685591	HARBISON BLVD	NE	HARBISON BLVD & JAMIL RD
100000362	6137	2	0.606587			
100000362	6137	3	1.056301			
100000362	6137	4	0.967331			
100000362	6137	5	1.095183			
100000362	6137	6	1.06411			
100000362	6137	7	0.81378			
100000362	6137	8	0.91755			
100000362	6137	9	1.011495			
100000362	6137	10	0.901948			
100000362	6717	1	0.099772	HARBISON BLVD	SW	HARBISON BLVD & JAMIL RD
100000362	6717	2	0.051197			
100000362	6717	3	0.028871			
100000362	6717	4	0.060203			
100000362	6717	5	0.167926			
100000362	6717	6	0.094292			
100000362	6717	7	0.065555			
100000362	6717	8	0.109309			
100000362	6717	9	0.145861			
100000362	6717	10	0.278175			
100000364	6145	1	10.385531	HARBISON BLVD	SW	HARBISON BLVD & COLUMBIANA DR
100000364	6145	2	12.789278			
100000364	6145	3	11.875264			
100000364	6145	4	10.085695			
100000364	6145	5	11.157973			
100000364	6145	6	11.207624			
100000364	6145	7	11.560016			
100000364	6145	8	10.758879			
100000364	6145	9	10.7974			
100000364	6145	10	11.039022			
100000364	6176	1	5.378475	HARBISON BLVD	NE	HARBISON BLVD & COLUMBIANA DR
100000364	6176	2	5.93152			
100000364	6176	3	5.36515			
100000364	6176	4	5.713837			
100000364	6176	5	5.164421			
100000364	6176	6	5.505767			
100000364	6176	7	6.057253			
100000364	6176	8	6.257684			
100000364	6176	9	5.496309			
100000364	6176	10	4.974556			
100000364	6177	1		COLUMBIANA DR	NW	HARBISON BLVD & COLUMBIANA DR
100000364	6177	2				
100000364	6177	3				
100000364	6177	4				
100000364	6177	5				
100000364	6177	6				
100000364	6177	7				
100000364	6177	8				
100000364	6177	9				
100000364	6177	10				
100000364	6196	1	43.709158	COLUMBIANA DR	SE	HARBISON BLVD & COLUMBIANA DR
100000364	6196	2	41.740198			
100000364	6196	3	47.166404			
100000364	6196	4	45.989097			
100000364	6196	5	45.752735			
100000364	6196	6	47.451326			
100000364	6196	7	60.240593			
100000364	6196	8	45.464964			
100000364	6196	9	46.612618			
100000364	6196	10	45.359945			
100000365	6137	1	11.299207	HARBISON BLVD	SW	COLUMBIANA CIR, HARBISON BLVD & PARK TERRACE DR
100000365	6137	2	12.491432			
100000365	6137	3	13.721607			
100000365	6137	4	12.717307			
100000365	6137	5	13.186958			
100000365	6137	6	14.027253			
100000365	6137	7	13.002683			
100000365	6137	8	12.704817			
100000365	6137	9	13.255218			
100000365	6137	10	12.17738			
100000365	6140	1	21.008216	COLUMBIANA CIR	SE	COLUMBIANA CIR, HARBISON BLVD & PARK TERRACE DR
100000365	6140	2	20.879927			
100000365	6140	3	16.420912			
100000365	6140	4	13.761708			
100000365	6140	5	18.860195			
100000365	6140	6	16.863603			
100000365	6140	7	21.732338			
100000365	6140	8	19.632018			
100000365	6140	9	14.274269			
100000365	6140	10	18.273516			
100000365	6145	1	2.351418	HARBISON BLVD	NE	COLUMBIANA CIR, HARBISON BLVD & PARK TERRACE DR
100000365	6145	2	1.979062			
100000365	6145	3	2.335315			
100000365	6145	4	2.216024			
100000365	6145	5	2.411932			
100000365	6145	6	2.38503			
100000365	6145	7	2.221666			
100000365	6145	8	2.731874			
100000365	6145	9	2.776727			
100000365	6145	10	2.311544			
100000365	6151	1	22.866114	PARK TERRACE DR	NW	COLUMBIANA CIR, HARBISON BLVD & PARK TERRACE DR
100000365	6151	2	22.028232			
100000365	6151	3	23.902135			
100000365	6151	4	26.220445			
100000365	6151	5	21.675306			
100000365	6151	6	25.87331			
100000365	6151	7	18.439346			
100000365	6151	8	26.993568			
100000365	6151	9	21.990589			
100000365	6151	10	23.328764			
100000391	5071	1	6.021448	BROAD RIVER RD	NW	BROAD RIVER RD & COLUMBIANA DR
100000391	5071	2	6.558345			
100000391	5071	3	7.184971			
100000391	5071	4	5.968366			
100000391	5071	5	7.673876			

Node	Superlink	Run	Average Control Delay	Approach Street Name	Direction	Intersection
100000391	5071	6	5.83757			
100000391	5071	7	6.924216			
100000391	5071	8	5.701433			
100000391	5071	9	7.866324			
100000391	5071	10	6.006337			
100000391	6214	1	45.221819	COLUMBIANA DR	NE	BROAD RIVER RD & COLUMBIANA DR
100000391	6214	2	48.064528			
100000391	6214	3	41.134416			
100000391	6214	4	52.660279			
100000391	6214	5	48.279299			
100000391	6214	6	48.478241			
100000391	6214	7	49.615777			
100000391	6214	8	43.684329			
100000391	6214	9	46.746946			
100000391	6214	10	45.057641			
100000391	6224	1	34.97627	BROAD RIVER RD	SE	BROAD RIVER RD & COLUMBIANA DR
100000391	6224	2	38.63477			
100000391	6224	3	39.542447			
100000391	6224	4	37.731353			
100000391	6224	5	39.485273			
100000391	6224	6	35.576711			
100000391	6224	7	38.506936			
100000391	6224	8	37.033241			
100000391	6224	9	41.185652			
100000391	6224	10	29.8968			
100000395	5086	1	40.723009	LAKE MURRAY BLVD	W	LAKE MURRAY BLVD & COLUMBIANA DR
100000395	5086	2	74.161693			
100000395	5086	3	39.83814			
100000395	5086	4	40.025309			
100000395	5086	5	50.345241			
100000395	5086	6	76.735479			
100000395	5086	7	27.65053			
100000395	5086	8	26.063984			
100000395	5086	9	22.462058			
100000395	5086	10	35.489542			
100000395	6208	1	34.735968	COLUMBIANA DR	NW	LAKE MURRAY BLVD & COLUMBIANA DR
100000395	6208	2	52.555619			
100000395	6208	3	50.396825			
100000395	6208	4	44.192453			
100000395	6208	5	38.43385			
100000395	6208	6	51.74852			
100000395	6208	7	41.491834			
100000395	6208	8	42.458231			
100000395	6208	9	56.071225			
100000395	6208	10	41.178199			
100000395	6214	1	68.24525	COLUMBIANA DR	S	LAKE MURRAY BLVD & COLUMBIANA DR
100000395	6214	2	175.909235			
100000395	6214	3	80.544041			
100000395	6214	4	114.404017			
100000395	6214	5	89.11873			
100000395	6214	6	96.271586			
100000395	6214	7	74.195372			
100000395	6214	8	136.629769			
100000395	6214	9	90.35664			
100000395	6214	10	135.224399			
100000395	6215	1	32.166577	LAKE MURRAY BLVD	E	LAKE MURRAY BLVD & COLUMBIANA DR
100000395	6215	2	24.806852			
100000395	6215	3	32.529241			
100000395	6215	4	26.636583			
100000395	6215	5	37.133573			
100000395	6215	6	27.855615			
100000395	6215	7	30.647547			
100000395	6215	8	43.931074			
100000395	6215	9	25.306051			
100000395	6215	10	29.876091			
100000398	5101	1	2.945785	HARBISON BLVD	W	HARBISON BLVD & PARKRIDGE DR
100000398	5101	2	3.733244			
100000398	5101	3	3.013821			
100000398	5101	4	3.758583			
100000398	5101	5	3.320814			
100000398	5101	6	4.965699			
100000398	5101	7	4.957831			
100000398	5101	8	3.942692			
100000398	5101	9	4.138025			
100000398	5101	10	4.247279			
100000398	5102	1	1.606374	HARBISON BLVD	NE	HARBISON BLVD & PARKRIDGE DR
100000398	5102	2	1.534842			
100000398	5102	3	1.009999			
100000398	5102	4	1.824799			
100000398	5102	5	1.372617			
100000398	5102	6	1.766828			
100000398	5102	7	1.700172			
100000398	5102	8	2.000868			
100000398	5102	9	0.959916			
100000398	5102	10	1.293032			
100000398	6267	1	26.423916	PARKRIDGE DR	SE	HARBISON BLVD & PARKRIDGE DR
100000398	6267	2	25.697424			
100000398	6267	3	28.444242			
100000398	6267	4	25.461467			
100000398	6267	5	29.601091			
100000398	6267	6	26.274133			
100000398	6267	7	27.127293			
100000398	6267	8	26.672026			
100000398	6267	9	33.256624			
100000398	6267	10	31.536089			
100000399	6263	1	16.034113	PINEY GROVE RD	W	PINEY GROVE RD & FERNANDINA RD
100000399	6263	2	15.11416			
100000399	6263	3	19.073766			
100000399	6263	4	17.217206			
100000399	6263	5	17.868725			
100000399	6263	6	18.507376			
100000399	6263	7	17.42824			
100000399	6263	8	16.607912			
100000399	6263	9	18.207847			
100000399	6263	10	16.959643			
100000399	6265	1	15.856282	FERNANDINA RD	SE	PINEY GROVE RD & FERNANDINA RD
100000399	6265	2	15.515197			
100000399	6265	3	14.657282			
100000399	6265	4	14.779783			
100000399	6265	5	12.953517			
100000399	6265	6	15.602363			
100000399	6265	7	15.619848			
100000399	6265	8	17.546877			
100000399	6265	9	13.957161			
100000399	6265	10	12.246804			

Node	Superlink	Run	Average Control Delay	Approach Street Name	Direction	Intersection
100000399	6266	1	31.080633	FERNANDINA RD	N	PINEY GROVE RD & FERNANDINA RD
100000399	6266	2	29.941563			
100000399	6266	3	29.904046			
100000399	6266	4	32.300717			
100000399	6266	5	28.853302			
100000399	6266	6	31.493942			
100000399	6266	7	32.542986			
100000399	6266	8	29.30095			
100000399	6266	9	28.550918			
100000399	6266	10	30.843751			
100000399	6662	1	36.779881	PINEY GROVE RD	E	PINEY GROVE RD & FERNANDINA RD
100000399	6662	2	37.457813			
100000399	6662	3	41.044621			
100000399	6662	4	38.091047			
100000399	6662	5	39.068066			
100000399	6662	6	42.975034			
100000399	6662	7	39.6162			
100000399	6662	8	40.733892			
100000399	6662	9	44.897485			
100000399	6662	10	40.444586			
100000401	5093	1	10.246261	LAKE MURRAY BLVD	E	KINLEY RD, LAKE MURRAY BLVD & PARKRIDGE DR
100000401	5093	2	13.270164			
100000401	5093	3	8.679674			
100000401	5093	4	11.908405			
100000401	5093	5	10.135674			
100000401	5093	6	8.799088			
100000401	5093	7	21.922196			
100000401	5093	8	15.540859			
100000401	5093	9	14.435114			
100000401	5093	10	9.38724			
100000401	6276	1	26.446677	KINLEY RD	S	KINLEY RD, LAKE MURRAY BLVD & PARKRIDGE DR
100000401	6276	2	28.957179			
100000401	6276	3	21.792092			
100000401	6276	4	22.724483			
100000401	6276	5	22.675585			
100000401	6276	6	19.290118			
100000401	6276	7	80.599654			
100000401	6276	8	32.74826			
100000401	6276	9	24.842007			
100000401	6276	10	22.883727			
100000401	6313	1	11.502689	LAKE MURRAY BLVD	W	KINLEY RD, LAKE MURRAY BLVD & PARKRIDGE DR
100000401	6313	2	17.058678			
100000401	6313	3	13.200799			
100000401	6313	4	16.952734			
100000401	6313	5	10.934799			
100000401	6313	6	19.662009			
100000401	6313	7	12.767476			
100000401	6313	8	15.092449			
100000401	6313	9	15.871813			
100000401	6313	10	11.985767			
100000401	6745	1	55.523171	PARKRIDGE DR	N	KINLEY RD, LAKE MURRAY BLVD & PARKRIDGE DR
100000401	6745	2	45.33095			
100000401	6745	3	95.965977			
100000401	6745	4	45.617318			
100000401	6745	5	44.347617			
100000401	6745	6	42.808531			
100000401	6745	7	58.155634			
100000401	6745	8	53.060253			
100000401	6745	9	72.815573			
100000401	6745	10	56.512098			
100000446	6732	1	0	RAMP	SW	RAMP
100000446	6732	2	0			
100000446	6732	3	0			
100000446	6732	4	0			
100000446	6732	5	0			
100000446	6732	6	0			
100000446	6732	7	0			
100000446	6732	8	0			
100000446	6732	9	0			
100000446	6732	10	0			
100000446	6779	1	0	RAMP	S	RAMP
100000446	6779	2	0			
100000446	6779	3	0			
100000446	6779	4	0			
100000446	6779	5	0			
100000446	6779	6	0			
100000446	6779	7	0			
100000446	6779	8	0			
100000446	6779	9	0			
100000446	6779	10	0			
100000520	3345	1		I-26 WB EXIT 102 ON RAMP	N	I-26 WB EXIT 102 ON RAMP
100000520	3345	2				
100000520	3345	3				
100000520	3345	4				
100000520	3345	5				
100000520	3345	6				
100000520	3345	7				
100000520	3345	8				
100000520	3345	9				
100000520	3345	10				
100000520	3350	1	0	I-26 WB EXIT 102 ON RAMP	N	I-26 WB EXIT 102 ON RAMP
100000520	3350	2	0			
100000520	3350	3	0			
100000520	3350	4	0			
100000520	3350	5	0			
100000520	3350	6	0			
100000520	3350	7	0			
100000520	3350	8	0			
100000520	3350	9	0			
100000520	3350	10	0			
100000702	4343	1	0	RAMP	SW	RAMP & 6587 (E)
100000702	4343	2	0			
100000702	4343	3	0			
100000702	4343	4	0			
100000702	4343	5	0			
100000702	4343	6	0			
100000702	4343	7	0			
100000702	4343	8	0			
100000702	4343	9	0			
100000702	4343	10	0			
100000702	6587	1	0		W	RAMP & 6587 (E)
100000702	6587	2	0			
100000702	6587	3	0			
100000702	6587	4	0			
100000702	6587	5	0			

Node	Superlink	Run	Average Control Delay	Approach Street Name	Direction	Intersection
100000702	6587	6	0			
100000702	6587	7	0			
100000702	6587	8	0			
100000702	6587	9	0			
100000702	6587	10	0			
100000897	5134	1	0	W COLONIAL LIFE BLVD	NW	COLONIAL LIFE BLVD W & W COLONIAL LIFE BLVD
100000897	5134	2	0			
100000897	5134	3	5.095498			
100000897	5134	4	0			
100000897	5134	5	1.538596			
100000897	5134	6	0.551726			
100000897	5134	7	2.935111			
100000897	5134	8	0			
100000897	5134	9	1.817657			
100000897	5134	10	0			
100000897	6471	1	2.979138	COLONIAL LIFE BLVD W	S	COLONIAL LIFE BLVD W & W COLONIAL LIFE BLVD
100000897	6471	2	2.969352			
100000897	6471	3	2.663633			
100000897	6471	4	2.904228			
100000897	6471	5	2.948604			
100000897	6471	6	2.015615			
100000897	6471	7	2.853871			
100000897	6471	8	2.740088			
100000897	6471	9	2.774388			
100000897	6471	10	2.383975			
100000897	6545	1	1.132599	COLONIAL LIFE BLVD W	NE	COLONIAL LIFE BLVD W & W COLONIAL LIFE BLVD
100000897	6545	2	1.493067			
100000897	6545	3	1.287082			
100000897	6545	4	1.361253			
100000897	6545	5	1.712829			
100000897	6545	6	1.054125			
100000897	6545	7	1.301843			
100000897	6545	8	1.426595			
100000897	6545	9	1.504254			
100000897	6545	10	1.320939			
100000898	5125	1	1.564324	BUSH RIVER RD	W	BUSH RIVER RD
100000898	5125	2	1.68964			
100000898	5125	3	1.676155			
100000898	5125	4	2.073364			
100000898	5125	5	1.803284			
100000898	5125	6	2.246549			
100000898	5125	7	2.234142			
100000898	5125	8	2.619973			
100000898	5125	9	2.133162			
100000898	5125	10	1.871793			
100000898	5130	1	20.541184	BUSH RIVER RD	N	BUSH RIVER RD
100000898	5130	2	20.734315			
100000898	5130	3	22.925815			
100000898	5130	4	22.415505			
100000898	5130	5	27.05591			
100000898	5130	6	24.632592			
100000898	5130	7	21.272958			
100000898	5130	8	21.31587			
100000898	5130	9	24.745386			
100000898	5130	10	21.036838			
100000898	5131	1	3.321021	BUSH RIVER RD	E	BUSH RIVER RD
100000898	5131	2	4.063098			
100000898	5131	3	3.520949			
100000898	5131	4	3.728102			
100000898	5131	5	3.444033			
100000898	5131	6	3.923575			
100000898	5131	7	3.888335			
100000898	5131	8	3.712992			
100000898	5131	9	4.245042			
100000898	5131	10	3.18268			
100000899	6105	1	0	BURNING TREE RD	S	I-26 WB TO BURNING TREE RD EXIT 106 OFF RAMP & BURNING TREE RD
100000899	6105	2	0			
100000899	6105	3	0			
100000899	6105	4	0			
100000899	6105	5	0			
100000899	6105	6	0			
100000899	6105	7	0			
100000899	6105	8	0			
100000899	6105	9	0			
100000899	6105	10	0			
100000899	6106	1	0	BURNING TREE RD	N	I-26 WB TO BURNING TREE RD EXIT 106 OFF RAMP & BURNING TREE RD
100000899	6106	2	0			
100000899	6106	3	0			
100000899	6106	4	0			
100000899	6106	5	0			
100000899	6106	6	0			
100000899	6106	7	0			
100000899	6106	8	0			
100000899	6106	9	0			
100000899	6106	10	0			
100000902	4292	1	26.963041	RAMP	NE	SUNSET BLVD & RAMP
100000902	4292	2	25.459688			
100000902	4292	3	30.646021			
100000902	4292	4	22.983781			
100000902	4292	5	23.265503			
100000902	4292	6	30.551751			
100000902	4292	7	25.266297			
100000902	4292	8	24.195673			
100000902	4292	9	24.100582			
100000902	4292	10	23.838578			
100000902	4947	1	11.732135	SUNSET BLVD	W	SUNSET BLVD & RAMP
100000902	4947	2	11.266415			
100000902	4947	3	12.263985			
100000902	4947	4	13.230093			
100000902	4947	5	12.09463			
100000902	4947	6	11.688199			
100000902	4947	7	10.495945			
100000902	4947	8	10.824784			
100000902	4947	9	17.429552			
100000902	4947	10	10.799817			
100000902	4951	1	0	SUNSET BLVD	E	SUNSET BLVD & RAMP
100000902	4951	2	0			
100000902	4951	3	0			
100000902	4951	4	0			
100000902	4951	5	0			
100000902	4951	6	0			
100000902	4951	7	0			
100000902	4951	8	0			
100000902	4951	9	0			
100000902	4951	10	0			

Node	Superlink	Run	Average Control Delay	Approach Street Name	Direction	Intersection
100000903	4289	1	50.543588	RAMP	NW	RAMP & SUNSET BLVD
100000903	4289	2	53.412869			
100000903	4289	3	52.43415			
100000903	4289	4	51.871266			
100000903	4289	5	51.937434			
100000903	4289	6	50.584275			
100000903	4289	7	48.688158			
100000903	4289	8	50.733812			
100000903	4289	9	52.249328			
100000903	4289	10	52.451459			
100000903	4298	1	24.536299	RAMP	SE	RAMP & SUNSET BLVD
100000903	4298	2	25.200326			
100000903	4298	3	25.155695			
100000903	4298	4	25.592785			
100000903	4298	5	24.066763			
100000903	4298	6	25.326898			
100000903	4298	7	23.777007			
100000903	4298	8	24.998582			
100000903	4298	9	24.810481			
100000903	4298	10	24.101822			
100000903	4950	1	14.707426	SUNSET BLVD	E	RAMP & SUNSET BLVD
100000903	4950	2	14.408268			
100000903	4950	3	13.476138			
100000903	4950	4	14.015108			
100000903	4950	5	14.143749			
100000903	4950	6	13.847756			
100000903	4950	7	14.075033			
100000903	4950	8	14.22571			
100000903	4950	9	13.790815			
100000903	4950	10	14.738819			
100000903	4951	1	30.997966	SUNSET BLVD	W	RAMP & SUNSET BLVD
100000903	4951	2	30.573717			
100000903	4951	3	29.823412			
100000903	4951	4	29.031986			
100000903	4951	5	28.539507			
100000903	4951	6	30.513558			
100000903	4951	7	29.380851			
100000903	4951	8	31.022653			
100000903	4951	9	30.640623			
100000903	4951	10	29.232384			

2040 Build RRPA PM

Node	Superlink	Run	Average Control Delay	Approach Street Name	Direction	Intersection
4	5081	1	11.44778	BROAD RIVER RD	W	WESTERN LN & BROAD RIVER RD
4	5081	2	12.922939			
4	5081	3	12.0			
4	5081	4	12.3			
4	5081	5	14.8			
4	5081	6	11.957746			
4	5081	7	10.887024			
4	5081	8	12.8			
4	5081	9	13.9			
4	5081	10	14.4			
4	6465	1	12.68395	WESTERN LN	S	WESTERN LN & BROAD RIVER RD
4	6465	2	12.088797			
4	6465	3	10.7			
4	6465	4	11.6			
4	6465	5	11.520571			
4	6465	6	12.314321			
4	6465	7	11.5			
4	6465	8	13.3			
4	6465	9	10.9			
4	6465	10	12.18339			
4	6466	1	5.762849	BROAD RIVER RD	E	WESTERN LN & BROAD RIVER RD
4	6466	2	6.3			
4	6466	3	6.5			
4	6466	4	6.440018			
4	6466	5	6.177042			
4	6466	6	6.6			
4	6466	7	6.1			
4	6466	8	6.185215			
4	6466	9	6.575394			
4	6466	10	5.9			
4	6467	1	25.7	WESTERN LN	N	WESTERN LN & BROAD RIVER RD
4	6467	2	21.3			
4	6467	3	20.11742			
4	6467	4	22.679798			
4	6467	5	18.3			
4	6467	6	20.7			
4	6467	7	19.5			
4	6467	8	20.262926			
4	6467	9	19.803461			
4	6467	10	22.9			
40	6624	1	32.8	I-26 EB EXIT 106 OFF RAMP	E	I-26 EB EXIT 106 OFF RAMP, ST ANDREWS RD, I-26 WB TO BURNING TREE RD AND TO ST ANDREWS RD OFF RAMP,
40	6624	2	31.773754			
40	6624	3	28.72852			
40	6624	4	33.2			
40	6624	5	29.4			
40	6624	6	30.5			
40	6624	7	27.976452			
40	6624	8	30.935574			
40	6624	9	35.1			
40	6624	10	29.1			
40	6734	1	41.085258	ST ANDREWS RD	E	I-26 EB EXIT 106 OFF RAMP, ST ANDREWS RD, I-26 WB TO BURNING TREE RD AND TO ST ANDREWS RD OFF RAMP,
40	6734	2	42.116285			
40	6734	3	42.6			
40	6734	4	37.3			
40	6734	5	48.7			
40	6734	6	42.947995			
40	6734	7	42.594337			
40	6734	8	48.0			
40	6734	9	43.0			
40	6734	10	46.456721			
40	6737	1	37.860805	ST ANDREWS RD	W	I-26 EB EXIT 106 OFF RAMP, ST ANDREWS RD, I-26 WB TO BURNING TREE RD AND TO ST ANDREWS RD OFF RAMP,
40	6737	2	36.0			
40	6737	3	34.8			
40	6737	4	37.4			
40	6737	5	33.4			
40	6737	6	34.961929			
40	6737	7	34.40818			
40	6737	8	31.4			
40	6737	9	35.9			
40	6737	10	33.6			
40	6775	1	39.283777	I-26 WB TO BURNING TREE RD AND TO ST AND	W	I-26 EB EXIT 106 OFF RAMP, ST ANDREWS RD, I-26 WB TO BURNING TREE RD AND TO ST ANDREWS RD OFF RAMP,
40	6775	2	44.458899			
40	6775	3	38.4			
40	6775	4	36.7			
40	6775	5	39.3			
40	6775	6	50.271988			
40	6775	7	40.812961			
40	6775	8	38.6			
40	6775	9	39.8			
40	6775	10	38.7			
52	6750	1	13.063985	BUSH RIVER RD	E	BUSH RIVER RD, 6778 (SE) & 6777 (E)
52	6750	2	13.23838			
52	6750	3	14.2			
52	6750	4	12.8			
52	6750	5	13.4			
52	6750	6	12.834299			
52	6750	7	13.705341			
52	6750	8	13.8			
52	6750	9	13.1			
52	6750	10	13.0			
52	6778	1	26.752542		NW	BUSH RIVER RD, 6778 (SE) & 6777 (E)
52	6778	2	27.257368			
52	6778	3	24.8			
52	6778	4	29.4			
52	6778	5	26.9			
52	6778	6	26.921433			
52	6778	7	28.66701			
52	6778	8	26.1			
52	6778	9	29.3			
52	6778	10	27.2			
54	6057	1	18.332856	BROAD RIVER RD	SE	EXIT 65 RAMP TO US 176, BROAD RIVER RD & RAMP
54	6057	2	2.452301			
54	6057	3	17.3			
54	6057	4	12.824612			
54	6057	5	6.538265			
54	6057	6	6.1			
54	6057	7	1.2			
54	6057	8	5.850238			
54	6057	9	2.83892			
54	6057	10	1.1			
54	6575	1	62.6	EXIT 65 RAMP TO US 176	W	EXIT 65 RAMP TO US 176, BROAD RIVER RD & RAMP
54	6575	2	90.556491			
54	6575	3	119.163259			
54	6575	4	96.1			
54	6575	5	109.4			

Node	Superlink	Run	Average Control Delay	Approach Street Name	Direction	Intersection
54	6575	6	35.6			
54	6575	7	71.972544			
54	6575	8	107.745508			
54	6575	9	86.5			
54	6575	10	85.0			
54	6580	1	0	BROAD RIVER RD	NW	EXIT 65 RAMP TO US 176, BROAD RIVER RD & RAMP
54	6580	2	0			
54	6580	3	0.0			
54	6580	4	0.0			
54	6580	5	0.0			
54	6580	6	0			
54	6580	7	0			
54	6580	8	0.0			
54	6580	9	0.0			
54	6580	10	0.0			
65	2067	1	0	RAMP	N	6564 (W) & RAMP
65	2067	2	0			
65	2067	3	0.0			
65	2067	4	0.0			
65	2067	5	0.0			
65	2067	6	0			
65	2067	7	0			
65	2067	8	0.0			
65	2067	9	0.0			
65	2067	10	0.0			
65	6564	1	0		NE	6564 (W) & RAMP
65	6564	2	0			
65	6564	3	0.0			
65	6564	4	0.0			
65	6564	5	0.0			
65	6564	6	0			
65	6564	7	0			
65	6564	8	0.0			
65	6564	9	0.0			
65	6564	10	0			
71	6659	1	3.174864	PINEY GROVE RD	E	PINEY GROVE RD, I-26 EB EXIT 104 OFF RAMP & I-26 EB EXIT 104 ON RAMP
71	6659	2	3.0			
71	6659	3	3.8			
71	6659	4	2.8			
71	6659	5	3.30993			
71	6659	6	2.926487			
71	6659	7	3.2			
71	6659	8	2.5			
71	6659	9	3.741024			
71	6659	10	2.22634			
71	6660	1	0.0	PINEY GROVE RD	W	PINEY GROVE RD, I-26 EB EXIT 104 OFF RAMP & I-26 EB EXIT 104 ON RAMP
71	6660	2	0.0			
71	6660	3	0			
71	6660	4	0.000001			
71	6660	5	0.0			
71	6660	6	0.002695			
71	6660	7	0.00093			
71	6660	8	0.0			
71	6660	9	0.0			
71	6660	10	0.000002			
74	6579	1	0		NE	6579 (SW), 6581 (W) & RAMP
74	6579	2	0.0			
74	6579	3	0.0			
74	6579	4	0.0			
74	6579	5	0			
74	6579	6	0			
74	6579	7	0.0			
74	6579	8	0.0			
74	6579	9	0			
74	6579	10	0			
74	6581	1	0.0		NE	6579 (SW), 6581 (W) & RAMP
74	6581	2	0.0			
74	6581	3	0			
74	6581	4	0			
74	6581	5	0.0			
74	6581	6	0.0			
74	6581	7	0.0			
74	6581	8	0			
74	6581	9	0			
74	6581	10	0			
79	5148	1	14.6	BROAD RIVER RD	NW	6584 (NE), BROAD RIVER RD, 6583 (SW), 6587 (W) & 6581 (E)
79	5148	2	14.1			
79	5148	3	14.39723			
79	5148	4	14.383706			
79	5148	5	14.8			
79	5148	6	13.8			
79	5148	7	13.7			
79	5148	8	14.368983			
79	5148	9	14.309501			
79	5148	10	13.9			
79	6580	1	51.0	BROAD RIVER RD	SE	6584 (NE), BROAD RIVER RD, 6583 (SW), 6587 (W) & 6581 (E)
79	6580	2	54.4			
79	6580	3	56.340767			
79	6580	4	47.026653			
79	6580	5	48.213445			
79	6580	6	48.233995			
79	6580	7	43.965539			
79	6580	8	52.545698			
79	6580	9	44.465627			
79	6580	10	43.553541			
79	6583	1	50.95553		N	6584 (NE), BROAD RIVER RD, 6583 (SW), 6587 (W) & 6581 (E)
79	6583	2	51.273808			
79	6583	3	46.470856			
79	6583	4	42.076302			
79	6583	5	43.199247			
79	6583	6	52.437511			
79	6583	7	49.744658			
79	6583	8	47.9903			
79	6583	9	52.350165			
79	6583	10	51.459671			
79	6584	1	56.100351		S	6584 (NE), BROAD RIVER RD, 6583 (SW), 6587 (W) & 6581 (E)
79	6584	2	54.825458			
79	6584	3	53.402436			
79	6584	4	57.103057			
79	6584	5	55.350441			
79	6584	6	53.342066			
79	6584	7	57.870445			
79	6584	8	53.066529			
79	6584	9	55.779327			
79	6584	10	53.34453			

Node	Superlink	Run	Average Control Delay	Approach Street Name	Direction	Intersection
85	6627	1	0	I-26 WB EXIT 106 ON RAMP	N	I-26 WB EXIT 106 ON RAMP
85	6627	2	0			
85	6627	3	0			
85	6627	4	0			
85	6627	5	0			
85	6627	6	0			
85	6627	7	0			
85	6627	8	0			
85	6627	9	0			
85	6627	10	0			
85	6652	1	0.409945	I-26 WB EXIT 106 ON RAMP	NW	I-26 WB EXIT 106 ON RAMP
85	6652	2	0.498486			
85	6652	3	0.099301			
85	6652	4	0			
85	6652	5	0			
85	6652	6	0.276535			
85	6652	7	0.570091			
85	6652	8	0.127537			
85	6652	9	0			
85	6652	10	0			
99	6647	1	44.764304	I-26 WB EXIT 103 OFF RAMP	NW	I-26 WB EXIT 103 OFF RAMP, HARBISON BLVD, I-26 WB EXIT 103 ON RAMP & 6770 (SW)
99	6647	2	47.009566			
99	6647	3	47.580388			
99	6647	4	49.587652			
99	6647	5	43.689262			
99	6647	6	49.861564			
99	6647	7	43.738876			
99	6647	8	45.635387			
99	6647	9	48.388366			
99	6647	10	48.98358			
99	6719	1	14.266815	HARBISON BLVD	SW	I-26 WB EXIT 103 OFF RAMP, HARBISON BLVD, I-26 WB EXIT 103 ON RAMP & 6770 (SW)
99	6719	2	16.072614			
99	6719	3	12.831175			
99	6719	4	16.314841			
99	6719	5	12.322581			
99	6719	6	16.645839			
99	6719	7	13.806761			
99	6719	8	14.405893			
99	6719	9	17.851198			
99	6719	10	15.363662			
99	6770	1	73.162356		NE	I-26 WB EXIT 103 OFF RAMP, HARBISON BLVD, I-26 WB EXIT 103 ON RAMP & 6770 (SW)
99	6770	2	85.613489			
99	6770	3	85.546835			
99	6770	4	80.280447			
99	6770	5	111.289098			
99	6770	6	74.694051			
99	6770	7	87.089824			
99	6770	8	114.099344			
99	6770	9	63.702141			
99	6770	10	90.61452			
104	3211	1	27.927761	I-26 EB EXIT 103 OFF RAMP	SE	HARBISON BLVD, I-26 EB EXIT 103 OFF RAMP, 6770 (NE) & I-26 EB EXIT 103 ON RAMP
104	3211	2	26.287576			
104	3211	3	28.631176			
104	3211	4	25.555427			
104	3211	5	33.144477			
104	3211	6	23.841342			
104	3211	7	27.902394			
104	3211	8	28.652103			
104	3211	9	28.464785			
104	3211	10	28.629026			
104	6717	1	11.166369	HARBISON BLVD	NE	HARBISON BLVD, I-26 EB EXIT 103 OFF RAMP, 6770 (NE) & I-26 EB EXIT 103 ON RAMP
104	6717	2	22.455093			
104	6717	3	11.448761			
104	6717	4	25.490135			
104	6717	5	30.024573			
104	6717	6	17.212794			
104	6717	7	30.782555			
104	6717	8	34.076549			
104	6717	9	14.659544			
104	6717	10	32.844572			
104	6770	1	6.765651		SW	HARBISON BLVD, I-26 EB EXIT 103 OFF RAMP, 6770 (NE) & I-26 EB EXIT 103 ON RAMP
104	6770	2	6.687514			
104	6770	3	6.854528			
104	6770	4	5.969865			
104	6770	5	8.268098			
104	6770	6	7.140503			
104	6770	7	7.570301			
104	6770	8	7.403612			
104	6770	9	8.597454			
104	6770	10	9.551581			
107	3243	1	31.950752	RAMP	NW	RAMP, COLONIAL LIFE BLVD W & 6681 (NW)
107	3243	2	26.057186			
107	3243	3	25.814379			
107	3243	4	28.703592			
107	3243	5	26.722913			
107	3243	6	25.798794			
107	3243	7	31.598417			
107	3243	8	27.357608			
107	3243	9	36.138596			
107	3243	10	30.871241			
107	6545	1	14.084015	COLONIAL LIFE BLVD W	SW	RAMP, COLONIAL LIFE BLVD W & 6681 (NW)
107	6545	2	17.134001			
107	6545	3	13.808169			
107	6545	4	17.481405			
107	6545	5	16.33373			
107	6545	6	18.991059			
107	6545	7	16.625049			
107	6545	8	17.535971			
107	6545	9	20.060863			
107	6545	10	15.411982			
107	6678	1	2.937656	COLONIAL LIFE BLVD W	NE	RAMP, COLONIAL LIFE BLVD W & 6681 (NW)
107	6678	2	1.626597			
107	6678	3	1.179388			
107	6678	4	1.679075			
107	6678	5	1.343248			
107	6678	6	2.442636			
107	6678	7	3.97427			
107	6678	8	2.164531			
107	6678	9	2.593496			
107	6678	10	0.559126			
108	6676	1	18.422689		SE	COLONIAL LIFE BLVD W, 6676 (NW) & 6688 (SE)
108	6676	2	20.255837			
108	6676	3	16.911365			
108	6676	4	20.231429			
108	6676	5	19.892017			

Node	Superlink	Run	Average Control Delay	Approach Street Name	Direction	Intersection
108	6676	6	18.449741			
108	6676	7	16.685727			
108	6676	8	19.159133			
108	6676	9	17.741859			
108	6676	10	18.23429			
108	6678	1	32.147524	COLONIAL LIFE BLVD W	SW	COLONIAL LIFE BLVD W, 6676 (NW) & 6688 (SE)
108	6678	2	24.800028			
108	6678	3	30.546885			
108	6678	4	23.453383			
108	6678	5	25.130031			
108	6678	6	31.52863			
108	6678	7	35.278939			
108	6678	8	25.007049			
108	6678	9	30.123204			
108	6678	10	26.951028			
118	2071	1	20.836938	RAMP	W	BUSH RIVER RD & RAMP
118	2071	2	19.465666			
118	2071	3	21.722522			
118	2071	4	19.313009			
118	2071	5	22.302402			
118	2071	6	18.472427			
118	2071	7	20.3868			
118	2071	8	22.164786			
118	2071	9	19.735465			
118	2071	10	18.990199			
118	6750	1	0	BUSH RIVER RD	NW	BUSH RIVER RD & RAMP
118	6750	2	0			
118	6750	3	0			
118	6750	4	0			
118	6750	5	0			
118	6750	6	0			
118	6750	7	0			
118	6750	8	0			
118	6750	9	0			
118	6750	10	0			
118	6780	1	7.516399	BUSH RIVER RD	SE	BUSH RIVER RD & RAMP
118	6780	2	3.479815			
118	6780	3	3.369557			
118	6780	4	9.716982			
118	6780	5	13.664659			
118	6780	6	7.07725			
118	6780	7	2.548204			
118	6780	8	3.314124			
118	6780	9	2.998273			
118	6780	10	14.633238			
120	6740	1	12.902032	BUSH RIVER RD	W	BUSH RIVER RD & 6741 (NE)
120	6740	2	14.129071			
120	6740	3	15.612757			
120	6740	4	15.82143			
120	6740	5	16.444393			
120	6740	6	13.052906			
120	6740	7	14.621829			
120	6740	8	16.104607			
120	6740	9	13.765433			
120	6740	10	14.149052			
120	6741	1	39.740509		SW	BUSH RIVER RD & 6741 (NE)
120	6741	2	37.115369			
120	6741	3	32.912595			
120	6741	4	33.492608			
120	6741	5	33.78711			
120	6741	6	34.980241			
120	6741	7	34.966576			
120	6741	8	33.069625			
120	6741	9	31.575549			
120	6741	10	38.064591			
120	6781	1	10.766925	BUSH RIVER RD	E	BUSH RIVER RD & 6741 (NE)
120	6781	2	11.501725			
120	6781	3	11.115127			
120	6781	4	11.572437			
120	6781	5	11.690975			
120	6781	6	9.8334			
120	6781	7	12.128693			
120	6781	8	12.022047			
120	6781	9	10.922225			
120	6781	10	11.327464			
123	3328	1	0	I-26 EB EXIT 103 ON RAMP	SE	I-26 EB EXIT 103 ON RAMP & 6718 (W)
123	3328	2	0			
123	3328	3	0			
123	3328	4	0			
123	3328	5	0			
123	3328	6	0			
123	3328	7	0			
123	3328	8	0			
123	3328	9	0			
123	3328	10	0			
127	5116	1	26.467098	ST ANDREWS RD	E	WOODLAND HILLS RD, ST ANDREWS RD, I-26 EB EXIT 106 OFF RAMP & 6772 (NE)
127	5116	2	23.93239			
127	5116	3	30.016689			
127	5116	4	25.580104			
127	5116	5	29.037864			
127	5116	6	27.45334			
127	5116	7	21.594994			
127	5116	8	23.165952			
127	5116	9	24.333986			
127	5116	10	25.200975			
127	5119	1	13.815263	WOODLAND HILLS RD	N	WOODLAND HILLS RD, ST ANDREWS RD, I-26 EB EXIT 106 OFF RAMP & 6772 (NE)
127	5119	2	12.734427			
127	5119	3	12.779743			
127	5119	4	13.83358			
127	5119	5	13.238328			
127	5119	6	13.012129			
127	5119	7	13.544354			
127	5119	8	13.225296			
127	5119	9	12.763738			
127	5119	10	12.628171			
127	6736	1	4.216595	ST ANDREWS RD	W	WOODLAND HILLS RD, ST ANDREWS RD, I-26 EB EXIT 106 OFF RAMP & 6772 (NE)
127	6736	2	3.640205			
127	6736	3	4.73899			
127	6736	4	4.206341			
127	6736	5	4.404479			
127	6736	6	3.868648			
127	6736	7	2.500935			
127	6736	8	3.813353			
127	6736	9	2.689736			
127	6736	10	3.829361			

Node	Superlink	Run	Average Control Delay	Approach Street Name	Direction	Intersection
127	6773	1	15.091903	I-26 EB EXIT 106 OFF RAMP	S	WOODLAND HILLS RD, ST ANDREWS RD, I-26 EB EXIT 106 OFF RAMP & 6772 (NE)
127	6773	2	16.584498			
127	6773	3	15.464389			
127	6773	4	14.615583			
127	6773	5	13.454606			
127	6773	6	14.556698			
127	6773	7	13.848423			
127	6773	8	14.682483			
127	6773	9	14.62615			
127	6773	10	14.012886			
134	6563	1	24.244442		S	6563 (N), 6777 (W) & BUSH RIVER RD
134	6563	2	26.879636			
134	6563	3	22.631556			
134	6563	4	25.735928			
134	6563	5	22.872821			
134	6563	6	27.433279			
134	6563	7	23.950783			
134	6563	8	23.335703			
134	6563	9	22.257626			
134	6563	10	24.341294			
134	6777	1	0		E	6563 (N), 6777 (W) & BUSH RIVER RD
134	6777	2	0			
134	6777	3	0			
134	6777	4	0			
134	6777	5	0			
134	6777	6	0			
134	6777	7	0			
134	6777	8	0			
134	6777	9	0			
134	6777	10	0			
136	6555	1	14.34922	EXIT 63 RAMP TO BUSH RIVER RD	E	EXIT 63 RAMP TO BUSH RIVER RD, BUSH RIVER RD & RAMP
136	6555	2	16.278728			
136	6555	3	16.582812			
136	6555	4	15.874238			
136	6555	5	16.349524			
136	6555	6	13.796012			
136	6555	7	13.093492			
136	6555	8	15.463528			
136	6555	9	13.380339			
136	6555	10	14.94019			
136	6739	1	0	BUSH RIVER RD	SE	EXIT 63 RAMP TO BUSH RIVER RD, BUSH RIVER RD & RAMP
136	6739	2	0			
136	6739	3	0			
136	6739	4	0			
136	6739	5	0			
136	6739	6	0			
136	6739	7	0			
136	6739	8	0			
136	6739	9	0			
136	6739	10	0			
136	6781	1	4.183403	BUSH RIVER RD	NW	EXIT 63 RAMP TO BUSH RIVER RD, BUSH RIVER RD & RAMP
136	6781	2	6.953992			
136	6781	3	4.55727			
136	6781	4	5.666179			
136	6781	5	5.352055			
136	6781	6	4.766215			
136	6781	7	4.069117			
136	6781	8	4.746038			
136	6781	9	4.602616			
136	6781	10	4.326196			
141	6751	1	23.968364		NE	BUSH RIVER RD, 6752 (NE) & 6751 (SW)
141	6751	2	59.690007			
141	6751	3	22.402943			
141	6751	4	30.464975			
141	6751	5	39.502339			
141	6751	6	23.463711			
141	6751	7	28.313854			
141	6751	8	22.557796			
141	6751	9	22.667767			
141	6751	10	42.777084			
141	6752	1	44.525084		SW	BUSH RIVER RD, 6752 (NE) & 6751 (SW)
141	6752	2	43.941033			
141	6752	3	42.186317			
141	6752	4	25.98585			
141	6752	5	48.997356			
141	6752	6	46.703552			
141	6752	7	36.045766			
141	6752	8	33.739791			
141	6752	9	40.785366			
141	6752	10	40.159697			
141	6753	1	17.028811	BUSH RIVER RD	SE	BUSH RIVER RD, 6752 (NE) & 6751 (SW)
141	6753	2	32.488155			
141	6753	3	10.232252			
141	6753	4	13.405711			
141	6753	5	46.358722			
141	6753	6	11.782402			
141	6753	7	13.21957			
141	6753	8	15.117839			
141	6753	9	11.827408			
141	6753	10	35.093052			
141	6780	1	8.36732	BUSH RIVER RD	NW	BUSH RIVER RD, 6752 (NE) & 6751 (SW)
141	6780	2	8.303411			
141	6780	3	7.368378			
141	6780	4	7.068836			
141	6780	5	8.770402			
141	6780	6	6.441098			
141	6780	7	6.895318			
141	6780	8	9.139654			
141	6780	9	8.0006			
141	6780	10	7.457057			
150	6565	1	42.304549	BUSH RIVER RD	SE	BUSH RIVER RD & 6782 (W)
150	6565	2	38.666855			
150	6565	3	40.638129			
150	6565	4	40.408586			
150	6565	5	39.969806			
150	6565	6	40.733927			
150	6565	7	41.330671			
150	6565	8	39.060477			
150	6565	9	40.865205			
150	6565	10	40.403089			
150	6739	1	7.300051	BUSH RIVER RD	W	BUSH RIVER RD & 6782 (W)
150	6739	2	7.808267			
150	6739	3	7.338272			
150	6739	4	7.502797			
150	6739	5	7.588373			

Node	Superlink	Run	Average Control Delay	Approach Street Name	Direction	Intersection
150	6739	6	6.861764			
150	6739	7	7.033765			
150	6739	8	7.742789			
150	6739	9	7.777567			
150	6739	10	7.082319			
151	6554	1	30.979902		NW	6782 (E), 6554 (SE) & BUSH RIVER RD
151	6554	2	29.906093			
151	6554	3	28.10728			
151	6554	4	27.486539			
151	6554	5	30.530629			
151	6554	6	29.782333			
151	6554	7	29.73439			
151	6554	8	26.828815			
151	6554	9	29.836349			
151	6554	10	29.574711			
151	6782	1	0		W	6782 (E), 6554 (SE) & BUSH RIVER RD
151	6782	2	0			
151	6782	3	0			
151	6782	4	0			
151	6782	5	0			
151	6782	6	0			
151	6782	7	0			
151	6782	8	0			
151	6782	9	0			
151	6782	10	0			
100000093	4299	1	20.670622	RAMP	SW	SUNSET BLVD & RAMP
100000093	4299	2	21.35118			
100000093	4299	3	22.406402			
100000093	4299	4	23.153841			
100000093	4299	5	22.60551			
100000093	4299	6	22.847733			
100000093	4299	7	22.576831			
100000093	4299	8	22.740763			
100000093	4299	9	23.68433			
100000093	4299	10	21.886424			
100000093	4949	1	19.419564	SUNSET BLVD	E	SUNSET BLVD & RAMP
100000093	4949	2	20.288756			
100000093	4949	3	20.948696			
100000093	4949	4	20.139179			
100000093	4949	5	19.776639			
100000093	4949	6	20.345141			
100000093	4949	7	20.366786			
100000093	4949	8	18.721157			
100000093	4949	9	21.128655			
100000093	4949	10	20.162506			
100000093	4950	1	0.002195	SUNSET BLVD	W	SUNSET BLVD & RAMP
100000093	4950	2	0.000862			
100000093	4950	3	0.002648			
100000093	4950	4	0.002607			
100000093	4950	5	0.003036			
100000093	4950	6	0.002196			
100000093	4950	7	0.002329			
100000093	4950	8	0.002899			
100000093	4950	9	0.002715			
100000093	4950	10	0.002998			
100000120	5030	1	73.594171	SUNSET BLVD	W	CORLEY MILL RD, SUNSET BLVD & GINNY LN
100000120	5030	2	69.837773			
100000120	5030	3	66.006055			
100000120	5030	4	69.657461			
100000120	5030	5	67.957214			
100000120	5030	6	74.061316			
100000120	5030	7	67.833953			
100000120	5030	8	67.852558			
100000120	5030	9	69.549734			
100000120	5030	10	69.853613			
100000120	5352	1	568.590633	CORLEY MILL RD	S	CORLEY MILL RD, SUNSET BLVD & GINNY LN
100000120	5352	2	578.488431			
100000120	5352	3	512.280897			
100000120	5352	4	578.244504			
100000120	5352	5	595.252491			
100000120	5352	6	656.615368			
100000120	5352	7	624.022382			
100000120	5352	8	556.973712			
100000120	5352	9	539.223893			
100000120	5352	10	550.258016			
100000120	5353	1	69.393239	GINNY LN	N	CORLEY MILL RD, SUNSET BLVD & GINNY LN
100000120	5353	2	60.945692			
100000120	5353	3	67.224389			
100000120	5353	4	72.211861			
100000120	5353	5	62.87109			
100000120	5353	6	64.364045			
100000120	5353	7	59.951365			
100000120	5353	8	68.360385			
100000120	5353	9	64.805542			
100000120	5353	10	63.491906			
100000120	5355	1	27.126627	SUNSET BLVD	E	CORLEY MILL RD, SUNSET BLVD & GINNY LN
100000120	5355	2	25.782798			
100000120	5355	3	25.454028			
100000120	5355	4	28.898428			
100000120	5355	5	30.476808			
100000120	5355	6	28.271219			
100000120	5355	7	25.082468			
100000120	5355	8	27.327514			
100000120	5355	9	28.12652			
100000120	5355	10	27.305282			
100000134	2052	1	23.358895	RAMP	SW	SUNSET BLVD & RAMP
100000134	2052	2	21.432344			
100000134	2052	3	20.186819			
100000134	2052	4	21.091353			
100000134	2052	5	21.291499			
100000134	2052	6	21.756254			
100000134	2052	7	22.983077			
100000134	2052	8	22.681268			
100000134	2052	9	22.929093			
100000134	2052	10	20.812807			
100000134	5022	1	19.700202	SUNSET BLVD	NW	SUNSET BLVD & RAMP
100000134	5022	2	14.777309			
100000134	5022	3	10.139374			
100000134	5022	4	20.275587			
100000134	5022	5	17.989714			
100000134	5022	6	27.442134			
100000134	5022	7	15.710459			
100000134	5022	8	19.727772			
100000134	5022	9	13.459112			
100000134	5022	10	14.127778			

Node	Superlink	Run	Average Control Delay	Approach Street Name	Direction	Intersection
100000134	5030	1	18.706436	SUNSET BLVD	SE	SUNSET BLVD & RAMP
100000134	5030	2	17.384283			
100000134	5030	3	18.240554			
100000134	5030	4	18.502391			
100000134	5030	5	21.002096			
100000134	5030	6	18.718298			
100000134	5030	7	17.060897			
100000134	5030	8	19.12293			
100000134	5030	9	17.796294			
100000134	5030	10	17.782138			
100000135	2039	1	28.770288	RAMP	NE	SUNSET BLVD & RAMP
100000135	2039	2	28.889257			
100000135	2039	3	24.93414			
100000135	2039	4	26.952851			
100000135	2039	5	28.239777			
100000135	2039	6	28.790386			
100000135	2039	7	32.478495			
100000135	2039	8	26.088219			
100000135	2039	9	33.065782			
100000135	2039	10	30.483061			
100000135	5021	1	4.95073	SUNSET BLVD	NW	SUNSET BLVD & RAMP
100000135	5021	2	4.983622			
100000135	5021	3	5.115839			
100000135	5021	4	5.591757			
100000135	5021	5	5.095718			
100000135	5021	6	5.002944			
100000135	5021	7	4.225923			
100000135	5021	8	4.54529			
100000135	5021	9	4.728227			
100000135	5021	10	4.882221			
100000135	5022	1	1.898083	SUNSET BLVD	SE	SUNSET BLVD & RAMP
100000135	5022	2	2.086955			
100000135	5022	3	2.182736			
100000135	5022	4	2.753591			
100000135	5022	5	2.023048			
100000135	5022	6	2.002316			
100000135	5022	7	2.263281			
100000135	5022	8	2.154082			
100000135	5022	9	2.252358			
100000135	5022	10	2.524607			
100000136	5021	1	14.596579	SUNSET BLVD	SE	SUNSET BLVD, CROMER RD & DAVEGA DR
100000136	5021	2	11.82459			
100000136	5021	3	12.116351			
100000136	5021	4	15.144431			
100000136	5021	5	11.736404			
100000136	5021	6	11.357977			
100000136	5021	7	12.422004			
100000136	5021	8	11.024448			
100000136	5021	9	10.610035			
100000136	5021	10	12.670535			
100000136	5362	1	79.1049	CROMER RD	NE	SUNSET BLVD, CROMER RD & DAVEGA DR
100000136	5362	2	78.625728			
100000136	5362	3	75.057882			
100000136	5362	4	70.853337			
100000136	5362	5	71.957407			
100000136	5362	6	76.722397			
100000136	5362	7	90.89293			
100000136	5362	8	83.443059			
100000136	5362	9	79.01697			
100000136	5362	10	81.750261			
100000136	5364	1	32.81126	SUNSET BLVD	NW	SUNSET BLVD, CROMER RD & DAVEGA DR
100000136	5364	2	31.071337			
100000136	5364	3	27.191215			
100000136	5364	4	34.176233			
100000136	5364	5	24.685137			
100000136	5364	6	24.272699			
100000136	5364	7	23.621447			
100000136	5364	8	26.327493			
100000136	5364	9	24.630848			
100000136	5364	10	33.562221			
100000136	6459	1	22.109359	DAVEGA DR	SW	SUNSET BLVD, CROMER RD & DAVEGA DR
100000136	6459	2	21.760528			
100000136	6459	3	16.769879			
100000136	6459	4	15.698615			
100000136	6459	5	15.927197			
100000136	6459	6	19.858057			
100000136	6459	7	14.78356			
100000136	6459	8	18.32976			
100000136	6459	9	19.885804			
100000136	6459	10	18.841586			
100000144	5376	1	18.358307	SUNSET BLVD	E	W. HOSPITAL DR, SUNSET BLVD & SUNSET CT
100000144	5376	2	38.395248			
100000144	5376	3	57.578646			
100000144	5376	4	12.425882			
100000144	5376	5	17.1946			
100000144	5376	6	47.244597			
100000144	5376	7	15.519967			
100000144	5376	8	59.225699			
100000144	5376	9	46.359805			
100000144	5376	10	50.215052			
100000144	6760	1	71.093261	W. HOSPITAL DR	S	W. HOSPITAL DR, SUNSET BLVD & SUNSET CT
100000144	6760	2	59.6666			
100000144	6760	3	83.763612			
100000144	6760	4	57.761431			
100000144	6760	5	56.978875			
100000144	6760	6	62.400063			
100000144	6760	7	55.927781			
100000144	6760	8	65.304313			
100000144	6760	9	60.77433			
100000144	6760	10	110.083995			
100000144	6761	1		SUNSET CT	N	W. HOSPITAL DR, SUNSET BLVD & SUNSET CT
100000144	6761	2				
100000144	6761	3				
100000144	6761	4				
100000144	6761	5				
100000144	6761	6				
100000144	6761	7				
100000144	6761	8				
100000144	6761	9				
100000144	6761	10				
100000144	6762	1	7.216873	SUNSET BLVD	W	W. HOSPITAL DR, SUNSET BLVD & SUNSET CT
100000144	6762	2	6.654425			
100000144	6762	3	6.355322			
100000144	6762	4	6.000445			
100000144	6762	5	5.49272			

Node	Superlink	Run	Average Control Delay	Approach Street Name	Direction	Intersection
100000144	6762	6	6.320681			
100000144	6762	7	6.216252			
100000144	6762	8	5.863771			
100000144	6762	9	6.294965			
100000144	6762	10	5.252218			
100000150	3361	1	44.33236	I-26 EB EXIT 101 OFF RAMP	SW	I-26 EB EXIT 101 OFF RAMP & BROAD RIVER RD
100000150	3361	2	44.777648			
100000150	3361	3	49.350399			
100000150	3361	4	57.645218			
100000150	3361	5	43.590133			
100000150	3361	6	41.737294			
100000150	3361	7	133.073056			
100000150	3361	8	32.817671			
100000150	3361	9	38.71192			
100000150	3361	10	38.826331			
100000150	5071	1	0	BROAD RIVER RD	E	I-26 EB EXIT 101 OFF RAMP & BROAD RIVER RD
100000150	5071	2	0			
100000150	5071	3	0			
100000150	5071	4	0			
100000150	5071	5	0			
100000150	5071	6	0			
100000150	5071	7	0			
100000150	5071	8	0			
100000150	5071	9	0			
100000150	5071	10	0			
100000150	5073	1	0.072233	BROAD RIVER RD	W	I-26 EB EXIT 101 OFF RAMP & BROAD RIVER RD
100000150	5073	2	0.072185			
100000150	5073	3	0.072943			
100000150	5073	4	0.089755			
100000150	5073	5	0.069019			
100000150	5073	6	0.063122			
100000150	5073	7	0.093036			
100000150	5073	8	0.03016			
100000150	5073	9	0.083986			
100000150	5073	10	0.036222			
100000151	5072	1	1.196419	BROAD RIVER RD	E	BROAD RIVER RD & I-26 EB EXIT 101 ON RAMP
100000151	5072	2	0.558069			
100000151	5072	3	0.835344			
100000151	5072	4	1.415449			
100000151	5072	5	0.764453			
100000151	5072	6	0.78549			
100000151	5072	7	0.862977			
100000151	5072	8	1.154649			
100000151	5072	9	1.114666			
100000151	5072	10	0.891885			
100000151	5075	1	6.304758	BROAD RIVER RD	W	BROAD RIVER RD & I-26 EB EXIT 101 ON RAMP
100000151	5075	2	5.586613			
100000151	5075	3	6.201035			
100000151	5075	4	5.867041			
100000151	5075	5	5.023717			
100000151	5075	6	5.704445			
100000151	5075	7	5.539336			
100000151	5075	8	6.360803			
100000151	5075	9	6.046419			
100000151	5075	10	6.124387			
100000163	4947	1	8.837519	SUNSET BLVD	E	MCSWAIN DR, SUNSET BLVD & CHRIS DR
100000163	4947	2	8.401899			
100000163	4947	3	8.63543			
100000163	4947	4	7.58292			
100000163	4947	5	8.433141			
100000163	4947	6	8.816166			
100000163	4947	7	8.911888			
100000163	4947	8	9.748261			
100000163	4947	9	8.746251			
100000163	4947	10	8.314813			
100000163	5388	1	150.775266	SUNSET BLVD	NW	MCSWAIN DR, SUNSET BLVD & CHRIS DR
100000163	5388	2	29.748132			
100000163	5388	3	144.629436			
100000163	5388	4	167.073884			
100000163	5388	5	66.249589			
100000163	5388	6	118.653486			
100000163	5388	7	70.518006			
100000163	5388	8	176.485024			
100000163	5388	9	169.081847			
100000163	5388	10	90.646205			
100000163	5389	1	43.47718	MCSWAIN DR	S	MCSWAIN DR, SUNSET BLVD & CHRIS DR
100000163	5389	2	45.545463			
100000163	5389	3	40.414382			
100000163	5389	4	38.902356			
100000163	5389	5	38.622928			
100000163	5389	6	48.302419			
100000163	5389	7	45.554882			
100000163	5389	8	47.513103			
100000163	5389	9	38.865235			
100000163	5389	10	31.155868			
100000163	5418	1	59.664261	CHRIS DR	N	MCSWAIN DR, SUNSET BLVD & CHRIS DR
100000163	5418	2	56.339802			
100000163	5418	3	59.100364			
100000163	5418	4	59.481895			
100000163	5418	5	61.032349			
100000163	5418	6	61.393859			
100000163	5418	7	64.406881			
100000163	5418	8	61.209555			
100000163	5418	9	59.769557			
100000163	5418	10	58.713678			
100000165	5102	1	19.87437	HARBISON BLVD	SW	HARBISON BLVD & WOODCROSS DR
100000165	5102	2	42.213124			
100000165	5102	3	27.149725			
100000165	5102	4	29.56354			
100000165	5102	5	20.644121			
100000165	5102	6	54.330512			
100000165	5102	7	26.80065			
100000165	5102	8	28.476395			
100000165	5102	9	97.862775			
100000165	5102	10	41.160362			
100000165	5103	1	57.149677	WOODCROSS DR	NW	HARBISON BLVD & WOODCROSS DR
100000165	5103	2	53.884723			
100000165	5103	3	57.60788			
100000165	5103	4	54.338002			
100000165	5103	5	50.019073			
100000165	5103	6	51.447526			
100000165	5103	7	78.986923			
100000165	5103	8	51.567888			
100000165	5103	9	55.029351			
100000165	5103	10	55.901757			

Node	Superlink	Run	Average Control Delay	Approach Street Name	Direction	Intersection
100000165	6719	1	7.324382	HARBISON BLVD	NE	HARBISON BLVD & WOODCROSS DR
100000165	6719	2	7.004162			
100000165	6719	3	7.265245			
100000165	6719	4	6.88034			
100000165	6719	5	8.199026			
100000165	6719	6	7.189767			
100000165	6719	7	7.533129			
100000165	6719	8	7.382453			
100000165	6719	9	6.550193			
100000165	6719	10	7.407844			
100000168	5364	1	9.567204	SUNSET BLVD	E	SUNSET BLVD & LEAPHART RD
100000168	5364	2	8.268491			
100000168	5364	3	6.246674			
100000168	5364	4	8.182058			
100000168	5364	5	7.913712			
100000168	5364	6	8.327002			
100000168	5364	7	6.573123			
100000168	5364	8	7.153428			
100000168	5364	9	7.067161			
100000168	5364	10	6.411101			
100000168	5366	1	42.077074	LEAPHART RD	N	SUNSET BLVD & LEAPHART RD
100000168	5366	2	44.58016			
100000168	5366	3	46.70269			
100000168	5366	4	38.482152			
100000168	5366	5	41.661364			
100000168	5366	6	39.473128			
100000168	5366	7	40.937456			
100000168	5366	8	43.004643			
100000168	5366	9	38.641474			
100000168	5366	10	44.008897			
100000168	5372	1	7.510078	SUNSET BLVD	W	SUNSET BLVD & LEAPHART RD
100000168	5372	2	9.634564			
100000168	5372	3	8.419751			
100000168	5372	4	8.792563			
100000168	5372	5	8.006732			
100000168	5372	6	9.81047			
100000168	5372	7	8.178813			
100000168	5372	8	9.357851			
100000168	5372	9	7.420652			
100000168	5372	10	9.370026			
100000174	3229	1	31.496633	I-26 EB EXIT 104 OFF RAMP	SE	PINEY GROVE RD, I-26 EB EXIT 104 OFF RAMP & I-26 EB EXIT 104 ON RAMP
100000174	3229	2	28.973422			
100000174	3229	3	33.165256			
100000174	3229	4	30.9171			
100000174	3229	5	32.297453			
100000174	3229	6	32.624602			
100000174	3229	7	33.918298			
100000174	3229	8	30.631945			
100000174	3229	9	32.276472			
100000174	3229	10	29.387603			
100000174	5112	1	3.369821	PINEY GROVE RD	W	PINEY GROVE RD, I-26 EB EXIT 104 OFF RAMP & I-26 EB EXIT 104 ON RAMP
100000174	5112	2	3.355539			
100000174	5112	3	4.112177			
100000174	5112	4	2.983869			
100000174	5112	5	3.742144			
100000174	5112	6	3.914127			
100000174	5112	7	3.879298			
100000174	5112	8	3.476088			
100000174	5112	9	5.042689			
100000174	5112	10	3.3939			
100000174	6660	1	5.252088	PINEY GROVE RD	E	PINEY GROVE RD, I-26 EB EXIT 104 OFF RAMP & I-26 EB EXIT 104 ON RAMP
100000174	6660	2	5.375486			
100000174	6660	3	5.764294			
100000174	6660	4	5.63878			
100000174	6660	5	5.096702			
100000174	6660	6	6.069169			
100000174	6660	7	5.55133			
100000174	6660	8	4.798603			
100000174	6660	9	5.975538			
100000174	6660	10	5.135701			
100000177	5112	1	13.753026	PINEY GROVE RD	E	PINEY GROVE RD, I-26 WB EXIT 104 OFF RAMP & I-26 WB EXIT 104 ON RAMP
100000177	5112	2	19.945527			
100000177	5112	3	17.60546			
100000177	5112	4	13.024362			
100000177	5112	5	18.325224			
100000177	5112	6	15.222349			
100000177	5112	7	15.649116			
100000177	5112	8	14.243141			
100000177	5112	9	18.403126			
100000177	5112	10	13.912654			
100000177	6514	1	49.153653	I-26 WB EXIT 104 OFF RAMP	N	PINEY GROVE RD, I-26 WB EXIT 104 OFF RAMP & I-26 WB EXIT 104 ON RAMP
100000177	6514	2	50.633786			
100000177	6514	3	45.06659			
100000177	6514	4	45.494065			
100000177	6514	5	56.135201			
100000177	6514	6	50.828965			
100000177	6514	7	53.678964			
100000177	6514	8	69.947873			
100000177	6514	9	53.003992			
100000177	6514	10	46.907042			
100000177	6662	1	26.017154	PINEY GROVE RD	W	PINEY GROVE RD, I-26 WB EXIT 104 OFF RAMP & I-26 WB EXIT 104 ON RAMP
100000177	6662	2	26.001782			
100000177	6662	3	26.749011			
100000177	6662	4	22.664274			
100000177	6662	5	25.466078			
100000177	6662	6	25.298678			
100000177	6662	7	23.741729			
100000177	6662	8	25.120476			
100000177	6662	9	25.302856			
100000177	6662	10	23.62952			
100000182	5117	1	0	ST ANDREWS RD	SW	ST ANDREWS RD & 6774 (S)
100000182	5117	2	0			
100000182	5117	3	0			
100000182	5117	4	0			
100000182	5117	5	0			
100000182	5117	6	0			
100000182	5117	7	0			
100000182	5117	8	0			
100000182	5117	9	0			
100000182	5117	10	0			
100000182	6737	1	0	ST ANDREWS RD	NE	ST ANDREWS RD & 6774 (S)
100000182	6737	2	0			
100000182	6737	3	0			
100000182	6737	4	0			
100000182	6737	5	0			

Node	Superlink	Run	Average Control Delay	Approach Street Name	Direction	Intersection
100000182	6737	6	0			
100000182	6737	7	0			
100000182	6737	8	0			
100000182	6737	9	0			
100000182	6737	10	0			
100000182	6774	1	104.654606		NE	ST ANDREWS RD & 6774 (S)
100000182	6774	2	118.601422			
100000182	6774	3	110.756803			
100000182	6774	4	102.046396			
100000182	6774	5	76.761725			
100000182	6774	6	104.253531			
100000182	6774	7	110.401685			
100000182	6774	8	95.836932			
100000182	6774	9	92.293183			
100000182	6774	10	91.250104			
100000184	5499	1	13.133821	N ARROWWOOD RD	S	ARROWWOOD RD, BUSH RIVER RD & N ARROWWOOD RD
100000184	5499	2	11.364344			
100000184	5499	3	14.444298			
100000184	5499	4	14.232901			
100000184	5499	5	12.646583			
100000184	5499	6	12.619776			
100000184	5499	7	12.647379			
100000184	5499	8	15.535704			
100000184	5499	9	12.320263			
100000184	5499	10	13.82851			
100000184	5500	1	27.896748	ARROWWOOD RD	N	ARROWWOOD RD, BUSH RIVER RD & N ARROWWOOD RD
100000184	5500	2	29.221868			
100000184	5500	3	27.064567			
100000184	5500	4	28.074514			
100000184	5500	5	28.380013			
100000184	5500	6	26.95766			
100000184	5500	7	27.660804			
100000184	5500	8	26.06759			
100000184	5500	9	27.555089			
100000184	5500	10	28.372067			
100000184	6497	1	13.156497	BUSH RIVER RD	W	ARROWWOOD RD, BUSH RIVER RD & N ARROWWOOD RD
100000184	6497	2	13.38803			
100000184	6497	3	13.234435			
100000184	6497	4	12.437147			
100000184	6497	5	14.122396			
100000184	6497	6	12.336554			
100000184	6497	7	12.539507			
100000184	6497	8	12.164799			
100000184	6497	9	14.405768			
100000184	6497	10	11.78191			
100000184	6505	1	4.78197	BUSH RIVER RD	E	ARROWWOOD RD, BUSH RIVER RD & N ARROWWOOD RD
100000184	6505	2	4.508399			
100000184	6505	3	5.086291			
100000184	6505	4	5.431859			
100000184	6505	5	5.276115			
100000184	6505	6	5.091926			
100000184	6505	7	6.106031			
100000184	6505	8	5.564201			
100000184	6505	9	5.014884			
100000184	6505	10	4.13019			
100000185	3232	1	55.899305	RAMP	W	GREYSTONE BLVD & RAMP
100000185	3232	2	22.793146			
100000185	3232	3	73.27912			
100000185	3232	4	13.76855			
100000185	3232	5	13.8393			
100000185	3232	6	38.287455			
100000185	3232	7	32.241533			
100000185	3232	8	29.159726			
100000185	3232	9	21.214039			
100000185	3232	10	97.717621			
100000185	5140	1	0.616517	GREYSTONE BLVD	N	GREYSTONE BLVD & RAMP
100000185	5140	2	0.359774			
100000185	5140	3	0.381083			
100000185	5140	4	0.586988			
100000185	5140	5	0.468393			
100000185	5140	6	0.560758			
100000185	5140	7	0.463521			
100000185	5140	8	0.421985			
100000185	5140	9	0.535832			
100000185	5140	10	0.592817			
100000185	5143	1	12.9692	GREYSTONE BLVD	S	GREYSTONE BLVD & RAMP
100000185	5143	2	14.045481			
100000185	5143	3	11.068342			
100000185	5143	4	13.296889			
100000185	5143	5	14.108683			
100000185	5143	6	14.620541			
100000185	5143	7	15.796687			
100000185	5143	8	12.780095			
100000185	5143	9	15.109418			
100000185	5143	10	13.763523			
100000186	4949	1	14.660123	SUNSET BLVD	W	HARBOR DR, SUNSET BLVD & E HOSPITAL DR
100000186	4949	2	12.685915			
100000186	4949	3	16.902514			
100000186	4949	4	19.199857			
100000186	4949	5	16.056874			
100000186	4949	6	16.667124			
100000186	4949	7	15.237219			
100000186	4949	8	16.904225			
100000186	4949	9	16.76199			
100000186	4949	10	16.158457			
100000186	5386	1	297.22415	HARBOR DR	N	HARBOR DR, SUNSET BLVD & E HOSPITAL DR
100000186	5386	2	312.019209			
100000186	5386	3	112.043599			
100000186	5386	4	207.155419			
100000186	5386	5	347.98164			
100000186	5386	6	128.005769			
100000186	5386	7	365.819881			
100000186	5386	8	166.065219			
100000186	5386	9	161.257908			
100000186	5386	10	235.77728			
100000186	5387	1	67.997218	E HOSPITAL DR	S	HARBOR DR, SUNSET BLVD & E HOSPITAL DR
100000186	5387	2	79.401789			
100000186	5387	3	67.004941			
100000186	5387	4	88.323948			
100000186	5387	5	77.841177			
100000186	5387	6	62.205413			
100000186	5387	7	70.750229			
100000186	5387	8	63.281725			
100000186	5387	9	62.946477			
100000186	5387	10	75.74119			

Node	Superlink	Run	Average Control Delay	Approach Street Name	Direction	Intersection
100000186	6762	1	49.919825	SUNSET BLVD	E	HARBOR DR, SUNSET BLVD & E HOSPITAL DR
100000186	6762	2	45.580773			
100000186	6762	3	50.824498			
100000186	6762	4	36.701076			
100000186	6762	5	43.198316			
100000186	6762	6	55.315733			
100000186	6762	7	35.309039			
100000186	6762	8	57.761178			
100000186	6762	9	50.567608			
100000186	6762	10	62.164678			
100000187	6057	1	45.661393	BROAD RIVER RD	NW	BROAD RIVER RD, BRIARGATE CIR & MARLEY DR
100000187	6057	2	54.265484			
100000187	6057	3	55.1499			
100000187	6057	4	59.126536			
100000187	6057	5	54.716617			
100000187	6057	6	41.950173			
100000187	6057	7	43.672444			
100000187	6057	8	57.739624			
100000187	6057	9	46.3912			
100000187	6057	10	48.974688			
100000187	6059	1	9.634226	BROAD RIVER RD	SE	BROAD RIVER RD, BRIARGATE CIR & MARLEY DR
100000187	6059	2	15.164822			
100000187	6059	3	9.42164			
100000187	6059	4	7.864298			
100000187	6059	5	9.90882			
100000187	6059	6	9.176591			
100000187	6059	7	8.925318			
100000187	6059	8	8.820408			
100000187	6059	9	8.751939			
100000187	6059	10	8.983053			
100000187	6060	1	57.743358	MARLEY DR	SW	BROAD RIVER RD, BRIARGATE CIR & MARLEY DR
100000187	6060	2	94.924966			
100000187	6060	3	73.225508			
100000187	6060	4	59.560109			
100000187	6060	5	68.653285			
100000187	6060	6	65.035883			
100000187	6060	7	57.329421			
100000187	6060	8	64.592428			
100000187	6060	9	55.174269			
100000187	6060	10	62.387015			
100000187	6061	1	26.277113	BRIARGATE CIR	NE	BROAD RIVER RD, BRIARGATE CIR & MARLEY DR
100000187	6061	2	39.623959			
100000187	6061	3	26.063423			
100000187	6061	4	26.902958			
100000187	6061	5	24.8067			
100000187	6061	6	30.689426			
100000187	6061	7	35.621332			
100000187	6061	8	33.767372			
100000187	6061	9	36.936709			
100000187	6061	10	26.346742			
100000188	3222	1	1.671035	RAMP	W	GREYSTONE BLVD & RAMP
100000188	3222	2	1.002137			
100000188	3222	3	1.170119			
100000188	3222	4	0.550195			
100000188	3222	5	1.025246			
100000188	3222	6	1.256221			
100000188	3222	7	0.366644			
100000188	3222	8	0.911004			
100000188	3222	9	1.269874			
100000188	3222	10	1.043099			
100000188	5139	1	1.688451	GREYSTONE BLVD	S	GREYSTONE BLVD & RAMP
100000188	5139	2	2.025719			
100000188	5139	3	1.796603			
100000188	5139	4	1.935183			
100000188	5139	5	1.288216			
100000188	5139	6	1.609521			
100000188	5139	7	1.680762			
100000188	5139	8	1.583113			
100000188	5139	9	1.785542			
100000188	5139	10	1.294328			
100000188	5143	1	1.878921	GREYSTONE BLVD	N	GREYSTONE BLVD & RAMP
100000188	5143	2	2.186955			
100000188	5143	3	1.948378			
100000188	5143	4	1.950938			
100000188	5143	5	2.155641			
100000188	5143	6	1.487567			
100000188	5143	7	2.374507			
100000188	5143	8	2.191264			
100000188	5143	9	1.552863			
100000188	5143	10	2.168518			
100000190	5148	1	0	BROAD RIVER RD	SE	BROAD RIVER RD, EXIT 65 RAMP TO US 176 & 6579 (NE)
100000190	5148	2	0			
100000190	5148	3	0			
100000190	5148	4	0			
100000190	5148	5	0			
100000190	5148	6	0			
100000190	5148	7	0			
100000190	5148	8	0			
100000190	5148	9	0			
100000190	5148	10	0			
100000190	6445	1	11.82187	BROAD RIVER RD	NW	BROAD RIVER RD, EXIT 65 RAMP TO US 176 & 6579 (NE)
100000190	6445	2	10.408236			
100000190	6445	3	12.114746			
100000190	6445	4	12.380285			
100000190	6445	5	11.803437			
100000190	6445	6	10.015522			
100000190	6445	7	11.291875			
100000190	6445	8	12.684067			
100000190	6445	9	12.715465			
100000190	6445	10	11.049271			
100000190	6574	1	21.797883	EXIT 65 RAMP TO US 176	E	BROAD RIVER RD, EXIT 65 RAMP TO US 176 & 6579 (NE)
100000190	6574	2	34.062589			
100000190	6574	3	26.59773			
100000190	6574	4	26.928982			
100000190	6574	5	26.259367			
100000190	6574	6	29.73719			
100000190	6574	7	27.302381			
100000190	6574	8	28.047485			
100000190	6574	9	28.871047			
100000190	6574	10	30.699273			
100000195	6049	1	18.532253	BROAD RIVER RD	NW	LONGCREEK DR & BROAD RIVER RD
100000195	6049	2	16.46197			
100000195	6049	3	17.815133			
100000195	6049	4	18.361297			
100000195	6049	5	16.699858			

Node	Superlink	Run	Average Control Delay	Approach Street Name	Direction	Intersection
100000195	6049	6	18.348307			
100000195	6049	7	18.164856			
100000195	6049	8	19.109424			
100000195	6049	9	17.334015			
100000195	6049	10	17.626913			
100000195	6052	1	46.858848	LONGCREEK DR	SW	LONGCREEK DR & BROAD RIVER RD
100000195	6052	2	49.645807			
100000195	6052	3	46.263913			
100000195	6052	4	46.001363			
100000195	6052	5	43.01153			
100000195	6052	6	44.163657			
100000195	6052	7	51.892416			
100000195	6052	8	51.960191			
100000195	6052	9	51.329378			
100000195	6052	10	46.703543			
100000195	6445	1	2.055013	BROAD RIVER RD	SE	LONGCREEK DR & BROAD RIVER RD
100000195	6445	2	2.412579			
100000195	6445	3	2.909684			
100000195	6445	4	2.60488			
100000195	6445	5	2.269939			
100000195	6445	6	1.887519			
100000195	6445	7	2.848476			
100000195	6445	8	2.362377			
100000195	6445	9	1.967876			
100000195	6445	10	2.804503			
100000252	5125	1	23.645515	BUSH RIVER RD	E	MORNINGHILL DR, BUSH RIVER RD & RAMP
100000252	5125	2	26.301979			
100000252	5125	3	20.357257			
100000252	5125	4	23.45217			
100000252	5125	5	21.682863			
100000252	5125	6	26.263326			
100000252	5125	7	23.106909			
100000252	5125	8	45.762305			
100000252	5125	9	23.062129			
100000252	5125	10	21.446295			
100000252	5487	1	48.412394	MORNINGHILL DR	S	MORNINGHILL DR, BUSH RIVER RD & RAMP
100000252	5487	2	83.091598			
100000252	5487	3	67.096101			
100000252	5487	4	53.828625			
100000252	5487	5	42.529954			
100000252	5487	6	51.451325			
100000252	5487	7	51.958253			
100000252	5487	8	51.628803			
100000252	5487	9	54.613827			
100000252	5487	10	49.715409			
100000252	5488	1		RAMP	N	MORNINGHILL DR, BUSH RIVER RD & RAMP
100000252	5488	2				
100000252	5488	3				
100000252	5488	4				
100000252	5488	5				
100000252	5488	6				
100000252	5488	7				
100000252	5488	8				
100000252	5488	9				
100000252	5488	10				
100000252	6505	1	13.460021	BUSH RIVER RD	W	MORNINGHILL DR, BUSH RIVER RD & RAMP
100000252	6505	2	12.229664			
100000252	6505	3	13.072557			
100000252	6505	4	13.801796			
100000252	6505	5	12.082406			
100000252	6505	6	14.09693			
100000252	6505	7	12.711454			
100000252	6505	8	13.563074			
100000252	6505	9	13.636786			
100000252	6505	10	13.530427			
100000254	5119	1	0	WOODLAND HILLS RD	S	WOODLAND HILLS RD & FRONTAGE RD
100000254	5119	2	0			
100000254	5119	3	0			
100000254	5119	4	0			
100000254	5119	5	0			
100000254	5119	6	0			
100000254	5119	7	0			
100000254	5119	8	0			
100000254	5119	9	0			
100000254	5119	10	0			
100000254	5607	1	11.960783	WOODLAND HILLS RD	N	WOODLAND HILLS RD & FRONTAGE RD
100000254	5607	2	11.8429			
100000254	5607	3	13.291803			
100000254	5607	4	10.653672			
100000254	5607	5	12.812199			
100000254	5607	6	14.776			
100000254	5607	7	11.772412			
100000254	5607	8	11.956221			
100000254	5607	9	10.40805			
100000254	5607	10	12.464402			
100000254	6538	1		FRONTAGE RD	W	WOODLAND HILLS RD & FRONTAGE RD
100000254	6538	2				
100000254	6538	3				
100000254	6538	4				
100000254	6538	5				
100000254	6538	6				
100000254	6538	7				
100000254	6538	8				
100000254	6538	9				
100000254	6538	10				
100000255	5470	1	67.331225	INDEPENDENCE AVE	N	BUSH RIVER RD & INDEPENDENCE AVE
100000255	5470	2	75.111078			
100000255	5470	3	52.3855			
100000255	5470	4	61.339983			
100000255	5470	5	162.961519			
100000255	5470	6	65.44559			
100000255	5470	7	157.522391			
100000255	5470	8	144.661583			
100000255	5470	9	127.513516			
100000255	5470	10	55.995729			
100000255	5471	1	12.632271	BUSH RIVER RD	W	BUSH RIVER RD & INDEPENDENCE AVE
100000255	5471	2	11.752876			
100000255	5471	3	12.880436			
100000255	5471	4	13.606045			
100000255	5471	5	13.117467			
100000255	5471	6	11.606673			
100000255	5471	7	10.434445			
100000255	5471	8	13.117294			
100000255	5471	9	12.453117			
100000255	5471	10	13.178958			

Node	Superlink	Run	Average Control Delay	Approach Street Name	Direction	Intersection
100000255	6740	1	17.104143	BUSH RIVER RD	E	BUSH RIVER RD & INDEPENDENCE AVE
100000255	6740	2	16.158265			
100000255	6740	3	15.605921			
100000255	6740	4	14.959191			
100000255	6740	5	16.065158			
100000255	6740	6	15.214811			
100000255	6740	7	16.415644			
100000255	6740	8	16.612339			
100000255	6740	9	15.822828			
100000255	6740	10	15.966292			
100000256	5131	1	5.73311	BUSH RIVER RD	W	BUSH RIVER RD & ZIMALCREST DR
100000256	5131	2	7.954884			
100000256	5131	3	6.618521			
100000256	5131	4	7.543262			
100000256	5131	5	6.3848			
100000256	5131	6	6.407553			
100000256	5131	7	6.416862			
100000256	5131	8	7.347965			
100000256	5131	9	7.315333			
100000256	5131	10	5.756926			
100000256	5465	1	8.377634	BUSH RIVER RD	E	BUSH RIVER RD & ZIMALCREST DR
100000256	5465	2	8.993428			
100000256	5465	3	9.904552			
100000256	5465	4	9.524619			
100000256	5465	5	6.983046			
100000256	5465	6	7.608239			
100000256	5465	7	7.004309			
100000256	5465	8	8.64182			
100000256	5465	9	8.13833			
100000256	5465	10	6.696724			
100000256	5484	1	38.517561	ZIMALCREST DR	S	BUSH RIVER RD & ZIMALCREST DR
100000256	5484	2	34.093673			
100000256	5484	3	38.188433			
100000256	5484	4	41.453876			
100000256	5484	5	38.772229			
100000256	5484	6	36.059262			
100000256	5484	7	45.380192			
100000256	5484	8	23.98772			
100000256	5484	9	31.552685			
100000256	5484	10	40.310577			
100000256	5485	1	11.836832	ZIMALCREST DR	N	BUSH RIVER RD & ZIMALCREST DR
100000256	5485	2	12.903961			
100000256	5485	3	12.185218			
100000256	5485	4	12.670984			
100000256	5485	5	11.85794			
100000256	5485	6	13.041716			
100000256	5485	7	13.998813			
100000256	5485	8	13.409049			
100000256	5485	9	13.585955			
100000256	5485	10	13.167824			
100000348	5116	1	10.237823	ST ANDREWS RD	NW	ST ANDREWS RD & JAMIL RD
100000348	5116	2	9.303805			
100000348	5116	3	10.777811			
100000348	5116	4	11.179564			
100000348	5116	5	9.57297			
100000348	5116	6	10.646821			
100000348	5116	7	10.786552			
100000348	5116	8	10.466025			
100000348	5116	9	10.510647			
100000348	5116	10	9.928094			
100000348	6114	1	48.961232	ST ANDREWS RD	E	ST ANDREWS RD & JAMIL RD
100000348	6114	2	38.595806			
100000348	6114	3	38.261421			
100000348	6114	4	70.888862			
100000348	6114	5	21.504098			
100000348	6114	6	14.985167			
100000348	6114	7	37.497638			
100000348	6114	8	24.87471			
100000348	6114	9	13.335232			
100000348	6114	10	23.795356			
100000348	6119	1	32.66866	JAMIL RD	S	ST ANDREWS RD & JAMIL RD
100000348	6119	2	29.418031			
100000348	6119	3	31.242431			
100000348	6119	4	29.999806			
100000348	6119	5	31.005649			
100000348	6119	6	31.743629			
100000348	6119	7	33.748843			
100000348	6119	8	30.816602			
100000348	6119	9	32.853306			
100000348	6119	10	30.549857			
100000353	6125	1	64.344318	BOWER PKY	SE	BOWER PKY, PINEY GROVE RD & JAMIL RD
100000353	6125	2	88.804663			
100000353	6125	3	50.727633			
100000353	6125	4	62.197513			
100000353	6125	5	56.53992			
100000353	6125	6	57.955898			
100000353	6125	7	72.537154			
100000353	6125	8	68.653259			
100000353	6125	9	60.419426			
100000353	6125	10	79.80547			
100000353	6126	1	31.672728	PINEY GROVE RD	E	BOWER PKY, PINEY GROVE RD & JAMIL RD
100000353	6126	2	34.613788			
100000353	6126	3	30.748873			
100000353	6126	4	30.746302			
100000353	6126	5	31.145993			
100000353	6126	6	27.318171			
100000353	6126	7	30.535479			
100000353	6126	8	30.367007			
100000353	6126	9	30.280089			
100000353	6126	10	32.122052			
100000353	6127	1	354.352795	JAMIL RD	NW	BOWER PKY, PINEY GROVE RD & JAMIL RD
100000353	6127	2	220.977197			
100000353	6127	3	283.168149			
100000353	6127	4	137.861325			
100000353	6127	5	162.739962			
100000353	6127	6	418.39726			
100000353	6127	7	400.258323			
100000353	6127	8	283.59463			
100000353	6127	9	334.160499			
100000353	6127	10	248.224566			
100000353	6659	1	34.147538	PINEY GROVE RD	W	BOWER PKY, PINEY GROVE RD & JAMIL RD
100000353	6659	2	33.542713			
100000353	6659	3	31.33546			
100000353	6659	4	37.116401			
100000353	6659	5	36.968602			

Node	Superlink	Run	Average Control Delay	Approach Street Name	Direction	Intersection
100000353	6659	6	32.740014			
100000353	6659	7	35.154364			
100000353	6659	8	29.347287			
100000353	6659	9	34.845547			
100000353	6659	10	35.681471			
100000354	6094	1	25.828486	ST ANDREWS RD	SW	ST ANDREWS RD, KAY ST & CHARTWELL RD
100000354	6094	2	21.665862			
100000354	6094	3	22.406528			
100000354	6094	4	21.742181			
100000354	6094	5	23.963379			
100000354	6094	6	23.878551			
100000354	6094	7	22.051728			
100000354	6094	8	21.097155			
100000354	6094	9	22.79612			
100000354	6094	10	22.289735			
100000354	6098	1	55.878723	CHARTWELL RD	NW	ST ANDREWS RD, KAY ST & CHARTWELL RD
100000354	6098	2	41.356191			
100000354	6098	3	42.271952			
100000354	6098	4	44.452294			
100000354	6098	5	40.14151			
100000354	6098	6	39.912507			
100000354	6098	7	50.312031			
100000354	6098	8	32.862159			
100000354	6098	9	46.343644			
100000354	6098	10	31.624847			
100000354	6099	1	27.768291	KAY ST	SE	ST ANDREWS RD, KAY ST & CHARTWELL RD
100000354	6099	2	23.796095			
100000354	6099	3	23.994446			
100000354	6099	4	22.37376			
100000354	6099	5	22.447904			
100000354	6099	6	24.311965			
100000354	6099	7	27.573001			
100000354	6099	8	26.084529			
100000354	6099	9	23.126527			
100000354	6099	10	27.72495			
100000354	6100	1	19.531602	ST ANDREWS RD	NE	ST ANDREWS RD, KAY ST & CHARTWELL RD
100000354	6100	2	18.388473			
100000354	6100	3	16.072736			
100000354	6100	4	16.0701			
100000354	6100	5	16.666633			
100000354	6100	6	16.762426			
100000354	6100	7	19.507865			
100000354	6100	8	18.806235			
100000354	6100	9	16.933449			
100000354	6100	10	18.207734			
100000358	5117	1	31.657652	ST ANDREWS RD	NE	ST ANDREWS RD, FERNANDINA RD & BURNING TREE RD
100000358	5117	2	31.105865			
100000358	5117	3	32.601146			
100000358	5117	4	30.303462			
100000358	5117	5	29.173836			
100000358	5117	6	28.944653			
100000358	5117	7	29.841384			
100000358	5117	8	28.92227			
100000358	5117	9	28.089141			
100000358	5117	10	29.508366			
100000358	6100	1	50.680242	ST ANDREWS RD	SW	ST ANDREWS RD, FERNANDINA RD & BURNING TREE RD
100000358	6100	2	49.338398			
100000358	6100	3	51.673147			
100000358	6100	4	43.28847			
100000358	6100	5	53.738437			
100000358	6100	6	41.991773			
100000358	6100	7	40.499415			
100000358	6100	8	41.611872			
100000358	6100	9	39.822554			
100000358	6100	10	42.096261			
100000358	6101	1	29.360603	BURNING TREE RD	NW	ST ANDREWS RD, FERNANDINA RD & BURNING TREE RD
100000358	6101	2	28.958446			
100000358	6101	3	30.266874			
100000358	6101	4	29.633589			
100000358	6101	5	30.631421			
100000358	6101	6	32.349118			
100000358	6101	7	30.881264			
100000358	6101	8	29.488287			
100000358	6101	9	28.512717			
100000358	6101	10	29.102077			
100000358	6102	1	15.540557	FERNANDINA RD	SE	ST ANDREWS RD, FERNANDINA RD & BURNING TREE RD
100000358	6102	2	17.829996			
100000358	6102	3	18.084938			
100000358	6102	4	16.641157			
100000358	6102	5	18.344717			
100000358	6102	6	15.868411			
100000358	6102	7	16.353514			
100000358	6102	8	18.895474			
100000358	6102	9	16.764427			
100000358	6102	10	16.148566			
100000360	6101	1	0	BURNING TREE RD	S	I-26 WB TO BURNING TREE RD EXIT 106 OFF RAMP & BURNING TREE RD
100000360	6101	2	0			
100000360	6101	3	0			
100000360	6101	4	0			
100000360	6101	5	0			
100000360	6101	6	0			
100000360	6101	7	0			
100000360	6101	8	0			
100000360	6101	9	0			
100000360	6101	10	0			
100000360	6105	1	0.000317	BURNING TREE RD	N	I-26 WB TO BURNING TREE RD EXIT 106 OFF RAMP & BURNING TREE RD
100000360	6105	2	0.000737			
100000360	6105	3	0.000361			
100000360	6105	4	0.000322			
100000360	6105	5	0			
100000360	6105	6	0.001031			
100000360	6105	7	0.000912			
100000360	6105	8	0.001207			
100000360	6105	9	0.001333			
100000360	6105	10	0.002135			
100000360	6766	1	39.257075	I-26 WB TO BURNING TREE RD EXIT 106 OFF RAI	NE	I-26 WB TO BURNING TREE RD EXIT 106 OFF RAMP & BURNING TREE RD
100000360	6766	2	13.679091			
100000360	6766	3	84.213918			
100000360	6766	4	110.409206			
100000360	6766	5	137.248826			
100000360	6766	6	52.793327			
100000360	6766	7	102.260088			
100000360	6766	8	30.31462			
100000360	6766	9	51.799283			
100000360	6766	10	72.235936			

Node	Superlink	Run	Average Control Delay	Approach Street Name	Direction	Intersection
100000362	6134	1	35.103449	JAMIL RD	NW	HARBISON BLVD & JAMIL RD
100000362	6134	2	42.044229			
100000362	6134	3	38.643747			
100000362	6134	4	42.036134			
100000362	6134	5	53.122249			
100000362	6134	6	40.510837			
100000362	6134	7	45.978367			
100000362	6134	8	51.704874			
100000362	6134	9	40.768436			
100000362	6134	10	50.941203			
100000362	6137	1	0.888347	HARBISON BLVD	NE	HARBISON BLVD & JAMIL RD
100000362	6137	2	11.279393			
100000362	6137	3	0.969136			
100000362	6137	4	13.317551			
100000362	6137	5	14.803811			
100000362	6137	6	1.616938			
100000362	6137	7	18.488029			
100000362	6137	8	15.064866			
100000362	6137	9	5.169172			
100000362	6137	10	25.288776			
100000362	6717	1	0.127341	HARBISON BLVD	SW	HARBISON BLVD & JAMIL RD
100000362	6717	2	0.018905			
100000362	6717	3	0.117961			
100000362	6717	4	0.237742			
100000362	6717	5	0.176711			
100000362	6717	6	0.010846			
100000362	6717	7	0.093949			
100000362	6717	8	0.090036			
100000362	6717	9	0.023567			
100000362	6717	10	0.145834			
100000364	6145	1	7.578217	HARBISON BLVD	SW	HARBISON BLVD & COLUMBIANA DR
100000364	6145	2	9.586388			
100000364	6145	3	7.96321			
100000364	6145	4	8.40823			
100000364	6145	5	9.73155			
100000364	6145	6	8.454773			
100000364	6145	7	7.821067			
100000364	6145	8	7.946545			
100000364	6145	9	9.830995			
100000364	6145	10	7.769313			
100000364	6176	1	6.373101	HARBISON BLVD	NE	HARBISON BLVD & COLUMBIANA DR
100000364	6176	2	6.95023			
100000364	6176	3	5.764875			
100000364	6176	4	7.134235			
100000364	6176	5	7.423111			
100000364	6176	6	6.214275			
100000364	6176	7	7.225509			
100000364	6176	8	7.530506			
100000364	6176	9	7.03951			
100000364	6176	10	8.403501			
100000364	6177	1		COLUMBIANA DR	NW	HARBISON BLVD & COLUMBIANA DR
100000364	6177	2				
100000364	6177	3				
100000364	6177	4				
100000364	6177	5				
100000364	6177	6				
100000364	6177	7				
100000364	6177	8				
100000364	6177	9				
100000364	6177	10				
100000364	6196	1	186.084558	COLUMBIANA DR	SE	HARBISON BLVD & COLUMBIANA DR
100000364	6196	2	252.722881			
100000364	6196	3	120.357509			
100000364	6196	4	195.524075			
100000364	6196	5	233.286495			
100000364	6196	6	165.001776			
100000364	6196	7	238.017262			
100000364	6196	8	255.021384			
100000364	6196	9	163.996003			
100000364	6196	10	255.814192			
100000365	6137	1	24.223797	HARBISON BLVD	SW	COLUMBIANA CIR, HARBISON BLVD & PARK TERRACE DR
100000365	6137	2	24.022778			
100000365	6137	3	25.01673			
100000365	6137	4	25.394546			
100000365	6137	5	27.945167			
100000365	6137	6	24.755336			
100000365	6137	7	27.673226			
100000365	6137	8	24.718917			
100000365	6137	9	22.991274			
100000365	6137	10	27.729776			
100000365	6140	1	55.909472	COLUMBIANA CIR	SE	COLUMBIANA CIR, HARBISON BLVD & PARK TERRACE DR
100000365	6140	2	58.359271			
100000365	6140	3	56.754995			
100000365	6140	4	57.728298			
100000365	6140	5	60.745275			
100000365	6140	6	54.814245			
100000365	6140	7	66.773713			
100000365	6140	8	62.40003			
100000365	6140	9	59.26039			
100000365	6140	10	58.645446			
100000365	6145	1	8.947958	HARBISON BLVD	NE	COLUMBIANA CIR, HARBISON BLVD & PARK TERRACE DR
100000365	6145	2	11.403248			
100000365	6145	3	9.682348			
100000365	6145	4	11.962121			
100000365	6145	5	16.235079			
100000365	6145	6	9.706365			
100000365	6145	7	19.552325			
100000365	6145	8	16.701456			
100000365	6145	9	9.622634			
100000365	6145	10	20.391799			
100000365	6151	1	53.487314	PARK TERRACE DR	NW	COLUMBIANA CIR, HARBISON BLVD & PARK TERRACE DR
100000365	6151	2	82.731069			
100000365	6151	3	80.386478			
100000365	6151	4	79.457264			
100000365	6151	5	87.277806			
100000365	6151	6	59.209685			
100000365	6151	7	68.252097			
100000365	6151	8	96.721753			
100000365	6151	9	60.539131			
100000365	6151	10	100.602088			
100000391	5071	1	7.359953	BROAD RIVER RD	NW	BROAD RIVER RD & COLUMBIANA DR
100000391	5071	2	6.663464			
100000391	5071	3	5.507919			
100000391	5071	4	7.553152			
100000391	5071	5	6.837778			

Node	Superlink	Run	Average Control Delay	Approach Street Name	Direction	Intersection
100000391	5071	6	6.14036			
100000391	5071	7	7.104215			
100000391	5071	8	6.375326			
100000391	5071	9	7.617655			
100000391	5071	10	5.542257			
100000391	6214	1	46.641993	COLUMBIANA DR	NE	BROAD RIVER RD & COLUMBIANA DR
100000391	6214	2	51.508688			
100000391	6214	3	44.335195			
100000391	6214	4	39.005446			
100000391	6214	5	44.93278			
100000391	6214	6	43.533261			
100000391	6214	7	43.230057			
100000391	6214	8	41.84494			
100000391	6214	9	45.638419			
100000391	6214	10	47.301142			
100000391	6224	1	17.149797	BROAD RIVER RD	SE	BROAD RIVER RD & COLUMBIANA DR
100000391	6224	2	13.259972			
100000391	6224	3	13.221247			
100000391	6224	4	16.351273			
100000391	6224	5	17.758517			
100000391	6224	6	14.534389			
100000391	6224	7	13.556355			
100000391	6224	8	14.157307			
100000391	6224	9	13.936703			
100000391	6224	10	11.826447			
100000395	5086	1	63.941946	LAKE MURRAY BLVD	W	LAKE MURRAY BLVD & COLUMBIANA DR
100000395	5086	2	52.306401			
100000395	5086	3	43.272401			
100000395	5086	4	65.683077			
100000395	5086	5	47.646496			
100000395	5086	6	58.725738			
100000395	5086	7	42.072461			
100000395	5086	8	50.217335			
100000395	5086	9	43.798937			
100000395	5086	10	70.323436			
100000395	6208	1	50.78261	COLUMBIANA DR	NW	LAKE MURRAY BLVD & COLUMBIANA DR
100000395	6208	2	83.527529			
100000395	6208	3	248.935206			
100000395	6208	4	234.523766			
100000395	6208	5	148.168332			
100000395	6208	6	224.864923			
100000395	6208	7	177.654521			
100000395	6208	8	95.512569			
100000395	6208	9	186.353923			
100000395	6208	10	64.488757			
100000395	6214	1	248.677858	COLUMBIANA DR	S	LAKE MURRAY BLVD & COLUMBIANA DR
100000395	6214	2	127.620789			
100000395	6214	3	280.736992			
100000395	6214	4	127.030959			
100000395	6214	5	434.184348			
100000395	6214	6	113.46909			
100000395	6214	7	130.4986			
100000395	6214	8	497.758016			
100000395	6214	9	543.319527			
100000395	6214	10	94.742478			
100000395	6215	1	96.377984	LAKE MURRAY BLVD	E	LAKE MURRAY BLVD & COLUMBIANA DR
100000395	6215	2	51.591549			
100000395	6215	3	67.336189			
100000395	6215	4	78.724543			
100000395	6215	5	139.750327			
100000395	6215	6	67.552809			
100000395	6215	7	52.44257			
100000395	6215	8	49.782082			
100000395	6215	9	69.850763			
100000395	6215	10	106.412869			
100000398	5101	1	2.140097	HARBISON BLVD	W	HARBISON BLVD & PARKRIDGE DR
100000398	5101	2	4.934359			
100000398	5101	3	2.37892			
100000398	5101	4	2.722079			
100000398	5101	5	3.043929			
100000398	5101	6	6.086296			
100000398	5101	7	2.296205			
100000398	5101	8	2.316561			
100000398	5101	9	57.15277			
100000398	5101	10	6.582783			
100000398	5102	1	4.515361	HARBISON BLVD	NE	HARBISON BLVD & PARKRIDGE DR
100000398	5102	2	13.387578			
100000398	5102	3	6.248409			
100000398	5102	4	10.129989			
100000398	5102	5	5.678883			
100000398	5102	6	12.148369			
100000398	5102	7	7.718684			
100000398	5102	8	8.670678			
100000398	5102	9	11.484587			
100000398	5102	10	8.940336			
100000398	6267	1	29.939594	PARKRIDGE DR	SE	HARBISON BLVD & PARKRIDGE DR
100000398	6267	2	35.246462			
100000398	6267	3	32.740565			
100000398	6267	4	32.364256			
100000398	6267	5	34.072508			
100000398	6267	6	32.216201			
100000398	6267	7	40.240872			
100000398	6267	8	32.303908			
100000398	6267	9	94.243435			
100000398	6267	10	37.764054			
100000399	6263	1	28.62786	PINEY GROVE RD	W	PINEY GROVE RD & FERNANDINA RD
100000399	6263	2	28.524456			
100000399	6263	3	23.790437			
100000399	6263	4	26.441858			
100000399	6263	5	28.007099			
100000399	6263	6	29.288512			
100000399	6263	7	25.678497			
100000399	6263	8	28.19928			
100000399	6263	9	29.608462			
100000399	6263	10	28.203426			
100000399	6265	1	23.992251	FERNANDINA RD	SE	PINEY GROVE RD & FERNANDINA RD
100000399	6265	2	26.57519			
100000399	6265	3	24.897373			
100000399	6265	4	29.681031			
100000399	6265	5	27.236299			
100000399	6265	6	24.758084			
100000399	6265	7	22.02579			
100000399	6265	8	21.214148			
100000399	6265	9	25.306527			
100000399	6265	10	27.519477			

Node	Superlink	Run	Average Control Delay	Approach Street Name	Direction	Intersection
100000399	6266	1	82.237651	FERNANDINA RD	N	PINEY GROVE RD & FERNANDINA RD
100000399	6266	2	86.449473			
100000399	6266	3	69.965228			
100000399	6266	4	92.840628			
100000399	6266	5	162.840135			
100000399	6266	6	143.15293			
100000399	6266	7	73.860115			
100000399	6266	8	61.990548			
100000399	6266	9	72.932139			
100000399	6266	10	132.896283			
100000399	6662	1	38.53975	PINEY GROVE RD	E	PINEY GROVE RD & FERNANDINA RD
100000399	6662	2	38.268523			
100000399	6662	3	35.434134			
100000399	6662	4	36.130748			
100000399	6662	5	41.372246			
100000399	6662	6	43.38637			
100000399	6662	7	39.2978			
100000399	6662	8	37.238636			
100000399	6662	9	43.203467			
100000399	6662	10	39.009553			
100000401	5093	1	12.539146	LAKE MURRAY BLVD	E	KINLEY RD, LAKE MURRAY BLVD & PARKRIDGE DR
100000401	5093	2	11.755261			
100000401	5093	3	13.129067			
100000401	5093	4	11.735156			
100000401	5093	5	11.177893			
100000401	5093	6	13.437875			
100000401	5093	7	11.545371			
100000401	5093	8	11.372213			
100000401	5093	9	13.663867			
100000401	5093	10	15.289017			
100000401	6276	1	26.718294	KINLEY RD	S	KINLEY RD, LAKE MURRAY BLVD & PARKRIDGE DR
100000401	6276	2	22.013573			
100000401	6276	3	25.881787			
100000401	6276	4	19.316056			
100000401	6276	5	20.019691			
100000401	6276	6	25.705317			
100000401	6276	7	24.266845			
100000401	6276	8	23.515774			
100000401	6276	9	23.209185			
100000401	6276	10	25.056418			
100000401	6313	1	13.490677	LAKE MURRAY BLVD	W	KINLEY RD, LAKE MURRAY BLVD & PARKRIDGE DR
100000401	6313	2	16.470227			
100000401	6313	3	18.721165			
100000401	6313	4	16.519675			
100000401	6313	5	20.480466			
100000401	6313	6	18.407466			
100000401	6313	7	17.37061			
100000401	6313	8	15.873744			
100000401	6313	9	17.590282			
100000401	6313	10	21.952632			
100000401	6745	1	44.982805	PARKRIDGE DR	N	KINLEY RD, LAKE MURRAY BLVD & PARKRIDGE DR
100000401	6745	2	45.098525			
100000401	6745	3	41.854591			
100000401	6745	4	37.830598			
100000401	6745	5	35.150577			
100000401	6745	6	46.255417			
100000401	6745	7	43.646278			
100000401	6745	8	41.031876			
100000401	6745	9	41.41363			
100000401	6745	10	44.065173			
100000446	6732	1	0	RAMP	SW	RAMP
100000446	6732	2	0			
100000446	6732	3	0			
100000446	6732	4	0			
100000446	6732	5	0			
100000446	6732	6	0			
100000446	6732	7	0			
100000446	6732	8	0			
100000446	6732	9	0			
100000446	6732	10	0			
100000446	6779	1	0	RAMP	S	RAMP
100000446	6779	2	0			
100000446	6779	3	0			
100000446	6779	4	0			
100000446	6779	5	0			
100000446	6779	6	0			
100000446	6779	7	0			
100000446	6779	8	0			
100000446	6779	9	0			
100000446	6779	10	0			
100000520	3345	1		I-26 WB EXIT 102 ON RAMP	N	I-26 WB EXIT 102 ON RAMP
100000520	3345	2				
100000520	3345	3				
100000520	3345	4				
100000520	3345	5				
100000520	3345	6				
100000520	3345	7				
100000520	3345	8				
100000520	3345	9				
100000520	3345	10				
100000520	3350	1	0	I-26 WB EXIT 102 ON RAMP	N	I-26 WB EXIT 102 ON RAMP
100000520	3350	2	0			
100000520	3350	3	0			
100000520	3350	4	0			
100000520	3350	5	0			
100000520	3350	6	0			
100000520	3350	7	0			
100000520	3350	8	0			
100000520	3350	9	0			
100000520	3350	10	0			
100000702	4343	1	0	RAMP	SW	RAMP & 6587 (E)
100000702	4343	2	0			
100000702	4343	3	0			
100000702	4343	4	0			
100000702	4343	5	0			
100000702	4343	6	0			
100000702	4343	7	0			
100000702	4343	8	0			
100000702	4343	9	0			
100000702	4343	10	0			
100000702	6587	1	0		W	RAMP & 6587 (E)
100000702	6587	2	0			
100000702	6587	3	0			
100000702	6587	4	0			
100000702	6587	5	0			

Node	Superlink	Run	Average Control Delay	Approach Street Name	Direction	Intersection
100000702	6587	6	0			
100000702	6587	7	0			
100000702	6587	8	0			
100000702	6587	9	0			
100000702	6587	10	0			
100000897	5134	1	21.379449	W COLONIAL LIFE BLVD	NW	COLONIAL LIFE BLVD W & W COLONIAL LIFE BLVD
100000897	5134	2	71.772888			
100000897	5134	3	45.219612			
100000897	5134	4	69.093647			
100000897	5134	5	58.86918			
100000897	5134	6	288.132529			
100000897	5134	7	26.886492			
100000897	5134	8	22.273506			
100000897	5134	9	30.602442			
100000897	5134	10	26.92646			
100000897	6471	1	6.18562	COLONIAL LIFE BLVD W	S	COLONIAL LIFE BLVD W & W COLONIAL LIFE BLVD
100000897	6471	2	5.792014			
100000897	6471	3	7.277133			
100000897	6471	4	4.132447			
100000897	6471	5	5.864035			
100000897	6471	6	6.382416			
100000897	6471	7	5.302145			
100000897	6471	8	6.000992			
100000897	6471	9	8.254487			
100000897	6471	10	8.217517			
100000897	6545	1	1.637493	COLONIAL LIFE BLVD W	NE	COLONIAL LIFE BLVD W & W COLONIAL LIFE BLVD
100000897	6545	2	2.13254			
100000897	6545	3	2.139118			
100000897	6545	4	2.185781			
100000897	6545	5	2.334024			
100000897	6545	6	1.773255			
100000897	6545	7	1.970126			
100000897	6545	8	2.043766			
100000897	6545	9	1.887667			
100000897	6545	10	1.946342			
100000898	5125	1	0.336583	BUSH RIVER RD	W	BUSH RIVER RD
100000898	5125	2	0.310163			
100000898	5125	3	0.434539			
100000898	5125	4	0.431783			
100000898	5125	5	0.511519			
100000898	5125	6	0.455394			
100000898	5125	7	0.443843			
100000898	5125	8	0.373293			
100000898	5125	9	0.319404			
100000898	5125	10	0.836169			
100000898	5130	1	18.32612	BUSH RIVER RD	N	BUSH RIVER RD
100000898	5130	2	21.839598			
100000898	5130	3	26.752664			
100000898	5130	4	22.399141			
100000898	5130	5	27.187976			
100000898	5130	6	28.267346			
100000898	5130	7	18.828929			
100000898	5130	8	17.957644			
100000898	5130	9	21.915447			
100000898	5130	10	23.840435			
100000898	5131	1	3.212402	BUSH RIVER RD	E	BUSH RIVER RD
100000898	5131	2	4.276806			
100000898	5131	3	3.996118			
100000898	5131	4	4.421386			
100000898	5131	5	4.030677			
100000898	5131	6	4.316317			
100000898	5131	7	5.897662			
100000898	5131	8	4.002461			
100000898	5131	9	3.584152			
100000898	5131	10	3.578749			
100000899	6105	1	0	BURNING TREE RD	S	I-26 WB TO BURNING TREE RD EXIT 106 OFF RAMP & BURNING TREE RD
100000899	6105	2	0			
100000899	6105	3	0			
100000899	6105	4	0			
100000899	6105	5	0			
100000899	6105	6	0			
100000899	6105	7	0			
100000899	6105	8	0			
100000899	6105	9	0			
100000899	6105	10	0			
100000899	6106	1	0	BURNING TREE RD	N	I-26 WB TO BURNING TREE RD EXIT 106 OFF RAMP & BURNING TREE RD
100000899	6106	2	0			
100000899	6106	3	0			
100000899	6106	4	0			
100000899	6106	5	0			
100000899	6106	6	0			
100000899	6106	7	0			
100000899	6106	8	0			
100000899	6106	9	0			
100000899	6106	10	0			
100000902	4292	1	19.633985	RAMP	NE	SUNSET BLVD & RAMP
100000902	4292	2	25.413116			
100000902	4292	3	23.569123			
100000902	4292	4	21.679463			
100000902	4292	5	22.692968			
100000902	4292	6	23.445419			
100000902	4292	7	27.169343			
100000902	4292	8	24.96886			
100000902	4292	9	30.148183			
100000902	4292	10	23.674222			
100000902	4947	1	35.939628	SUNSET BLVD	W	SUNSET BLVD & RAMP
100000902	4947	2	28.701745			
100000902	4947	3	34.626802			
100000902	4947	4	36.599395			
100000902	4947	5	31.856372			
100000902	4947	6	39.436929			
100000902	4947	7	26.349232			
100000902	4947	8	34.37511			
100000902	4947	9	35.49042			
100000902	4947	10	31.961158			
100000902	4951	1	0	SUNSET BLVD	E	SUNSET BLVD & RAMP
100000902	4951	2	0.000133			
100000902	4951	3	0			
100000902	4951	4	0			
100000902	4951	5	0			
100000902	4951	6	0.000248			
100000902	4951	7	0			
100000902	4951	8	0			
100000902	4951	9	0			
100000902	4951	10	0			

Node	Superlink	Run	Average Control Delay	Approach Street Name	Direction	Intersection
100000903	4289	1	55.318864	RAMP	NW	RAMP & SUNSET BLVD
100000903	4289	2	53.983194			
100000903	4289	3	54.19148			
100000903	4289	4	52.601394			
100000903	4289	5	54.649728			
100000903	4289	6	54.881427			
100000903	4289	7	53.745153			
100000903	4289	8	54.390589			
100000903	4289	9	53.491932			
100000903	4289	10	53.305822			
100000903	4298	1	35.250899	RAMP	SE	RAMP & SUNSET BLVD
100000903	4298	2	31.737255			
100000903	4298	3	31.815624			
100000903	4298	4	33.674904			
100000903	4298	5	32.002576			
100000903	4298	6	33.0462			
100000903	4298	7	31.473072			
100000903	4298	8	33.413681			
100000903	4298	9	32.383452			
100000903	4298	10	32.722107			
100000903	4950	1	13.672671	SUNSET BLVD	E	RAMP & SUNSET BLVD
100000903	4950	2	14.285213			
100000903	4950	3	14.175535			
100000903	4950	4	14.31218			
100000903	4950	5	15.330072			
100000903	4950	6	14.414662			
100000903	4950	7	14.132185			
100000903	4950	8	14.523906			
100000903	4950	9	14.455014			
100000903	4950	10	14.280307			
100000903	4951	1	19.952565	SUNSET BLVD	W	RAMP & SUNSET BLVD
100000903	4951	2	20.071706			
100000903	4951	3	22.665444			
100000903	4951	4	21.923933			
100000903	4951	5	20.526194			
100000903	4951	6	20.721978			
100000903	4951	7	20.029444			
100000903	4951	8	19.812849			
100000903	4951	9	27.391318			
100000903	4951	10	21.96724			

Appendix E—Conceptual Signing Plans

ADVANCE OVERHEAD SIGNING FOR I-20 EASTBOUND EXITS 64D-A

CAROLINA CROSSROADS
CONCEPTUAL SIGNING ALONG INTERSTATE 20

0 100 200 400 600 800 1000

SCALE : 1"=400'

SHEET 1

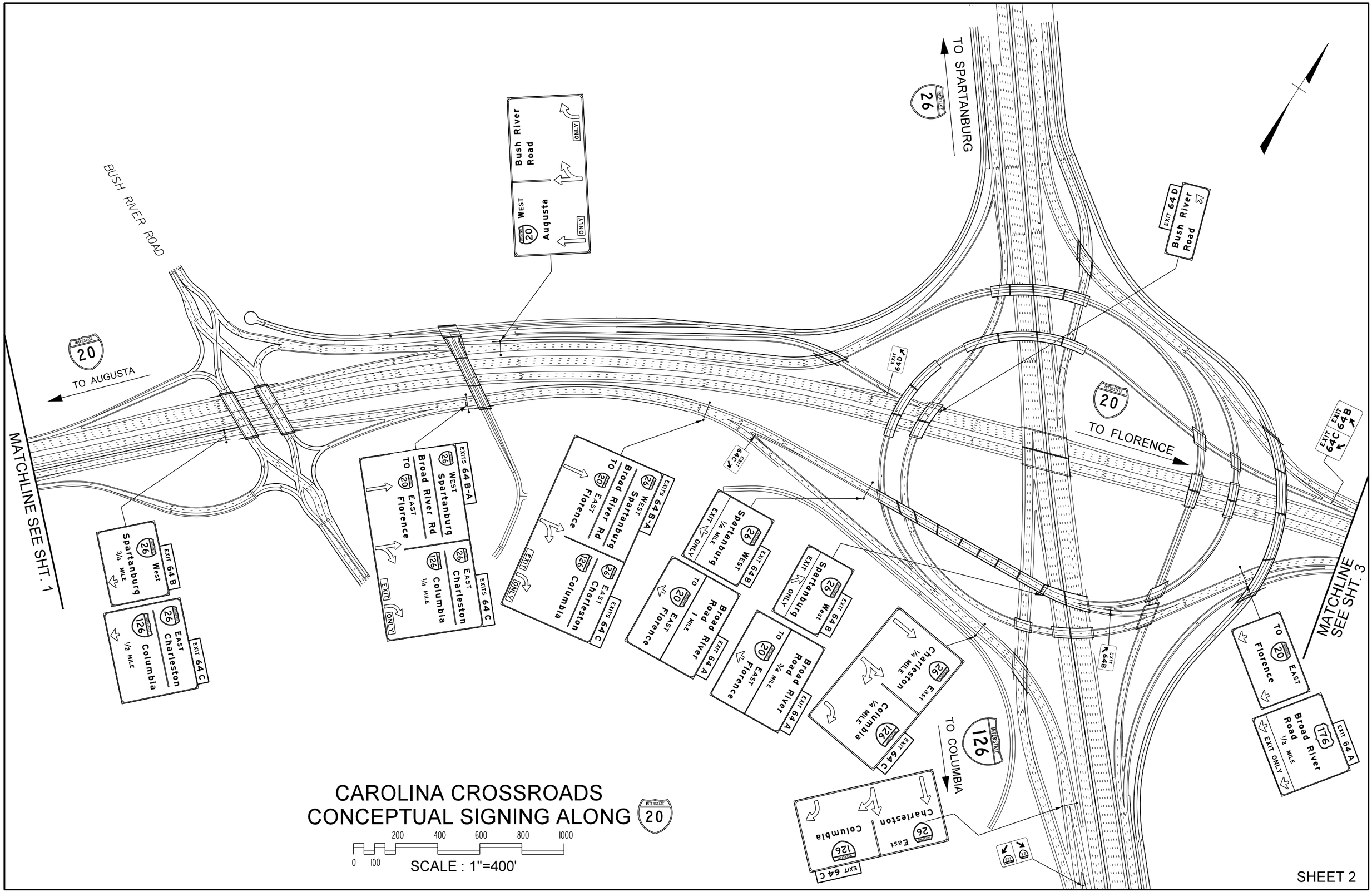
BUSH RIVER ROAD
TO SPARTANBURG
INTERSTATE 26
Bush River Road
ONLY
WEST
Augusta
INTERSTATE 20
ONLY
EXIT 64D
Bush River Road
INTERSTATE 20
TO AUGUSTA
TO FLORENCE
MATCHLINE SEE SHT. 1
MATCHLINE SEE SHT. 3
EXITS 64 B-A
WEST Spartanburg
Broad River Rd
TO EAST Florence
EAST Charleston
Columbia
1/4 MILE
EXIT ONLY
EXIT 64 B
Spartanburg
3/4 MILE
West
EXIT 64 C
Columbia
1/2 MILE
EAST Charleston
EXITS 64 C
Columbia
EAST Florence
Broad River Rd
WEST Spartanburg
EXITS 64 B-A
EXIT 64C
EXIT 64D
EXIT 64B
Spartanburg
1/4 MILE
West
EXIT 64 B
To Florence
1 MILE
Broad River Road
EXIT 64 A
To Florence
3/4 MILE
Broad River Road
EXIT 64 A
Columbia
1/4 MILE
East Charleston
EXIT 64 C
INTERSTATE 126
TO COLUMBIA
Columbia
East Charleston
EXIT 64 C
EXIT 64B
EXIT 64C
TO Florence
EAST
Broad River Road
1/2 MILE
EXIT ONLY
EXIT 64 A
CAROLINA CROSSROADS
CONCEPTUAL SIGNING ALONG INTERSTATE 20
0 100 200 400 600 800 1000
SCALE : 1"=400'
SHEET 2

MATCHLINE SEE SHT. 2

EXIT 64 B
West
26
Spartanburg
EXIT ONLY

EXIT 64 C
EAST
Charleston
26
Columbia
126
EXIT ONLY

INTERSTATE
20
TO AUGUSTA

EXIT 64 C
EAST
Charleston
26
Columbia
126
1/4 MILE
EXIT ONLY

EXIT 64 B
West
26
Spartanburg
1/4 MILE
EXIT ONLY

EXIT 64 D
Bush River
Road
3/4 MILE

EXITS 64 B-C
Spartanburg
Charleston
26
Columbia
126

WEST
20
Augusta

EXITS 64 B-C
Spartanburg
Charleston
26
Columbia
126
EXIT ONLY

WEST
20
Augusta

INTERSTATE
20
TO FLORENCE

MATCHLKINE SEE SHT. 4

EXITS 64 B-C

TO
20
EAST
Florence

Broad River
Road
176
EXIT ONLY
EXIT 64 A

EXIT 64A

TO
20
EAST
Florence

Broad River
Road
176
EXIT ONLY
EXIT 64 A

BROAD RIVER ROAD

CAROLINA CROSSROADS
CONCEPTUAL SIGNING ALONG INTERSTATE 20

0 100 200 400 600 800 1000

SCALE : 1"=400'

SHEET 3

ADVANCE OVERHEAD SIGNING FOR
I-20 WESTBOUND EXITS 64A-D

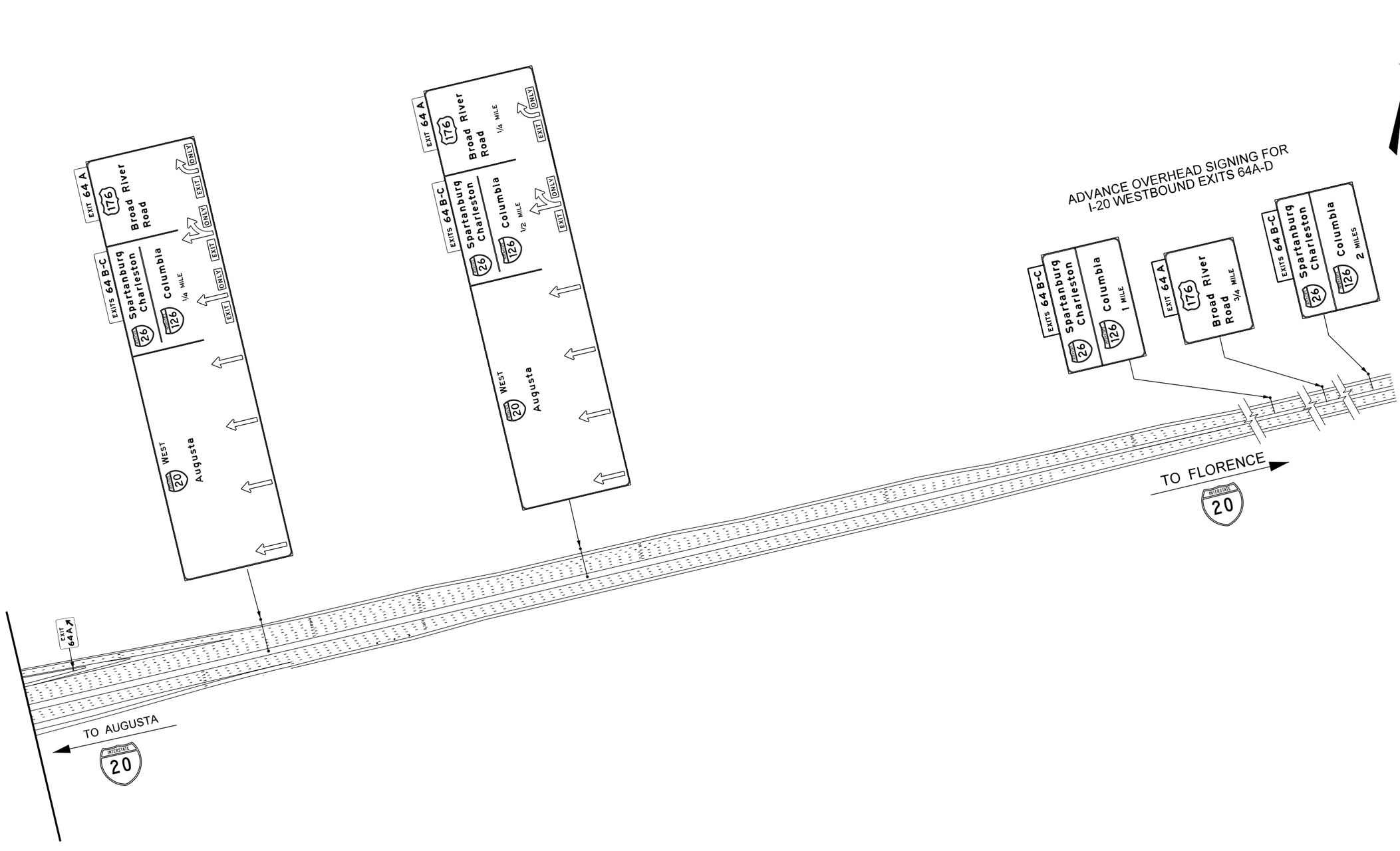

CAROLINA CROSSROADS
CONCEPTUAL SIGNING ALONG INTERSTATE 26

0 100 200 400 600 800 1000

SCALE : 1"=400'

MATCHLINE SEE SHT. 5

TO CHARLESTON

EXITS 107B-A
Florence
Augusta
3/4 MILE

EXIT 108
Columbia
Col. Life Blvd
To Bush River Rd
EXIT ONLY

EXIT 108

Col. Life Blvd
To Bush River
Road

Columbia

Col. Life Blvd
To Bush River
Road

Greystone Blvd
Riverbanks Zoo
1¼ MILE

Columbia

Col. Life Blvd
To Bush River
Road
½ MILE

TO COLUMBIA

MATCHLINE SEE SHT. 7

BUSH RIVER RD.

East
Charleston

Columbia

MATCHLINE SEE SHT. 8

COLONIAL LIFE BLVD.

Spartanburg
Florence
Augusta

East
Charleston

Spartanburg

Florence
Augusta
¼ MILE
EXIT ONLY

EXITS 107 A-B

EXITS 107 A-B
Florence
Augusta
½ MILE

East
Charleston
EXIT ONLY

EXITS 107 A-B

West
Spartanburg

Florence
Augusta
EXIT ONLY

EXIT 107A
West
Augusta

EXIT 107B
East
Florence
¼ MILE

West
Spartanburg

EXIT 107A
West
Augusta

EXIT 107B
East
Florence

TO SPARTANBURG

EXIT 106
St. Andrews
Road
¾ MILE
EXIT ONLY

CAROLINA CROSSROADS
CONCEPTUAL SIGNING ALONG 26

0 100 200 400 600 800 1000

SCALE : 1"=400'

SHEET 6

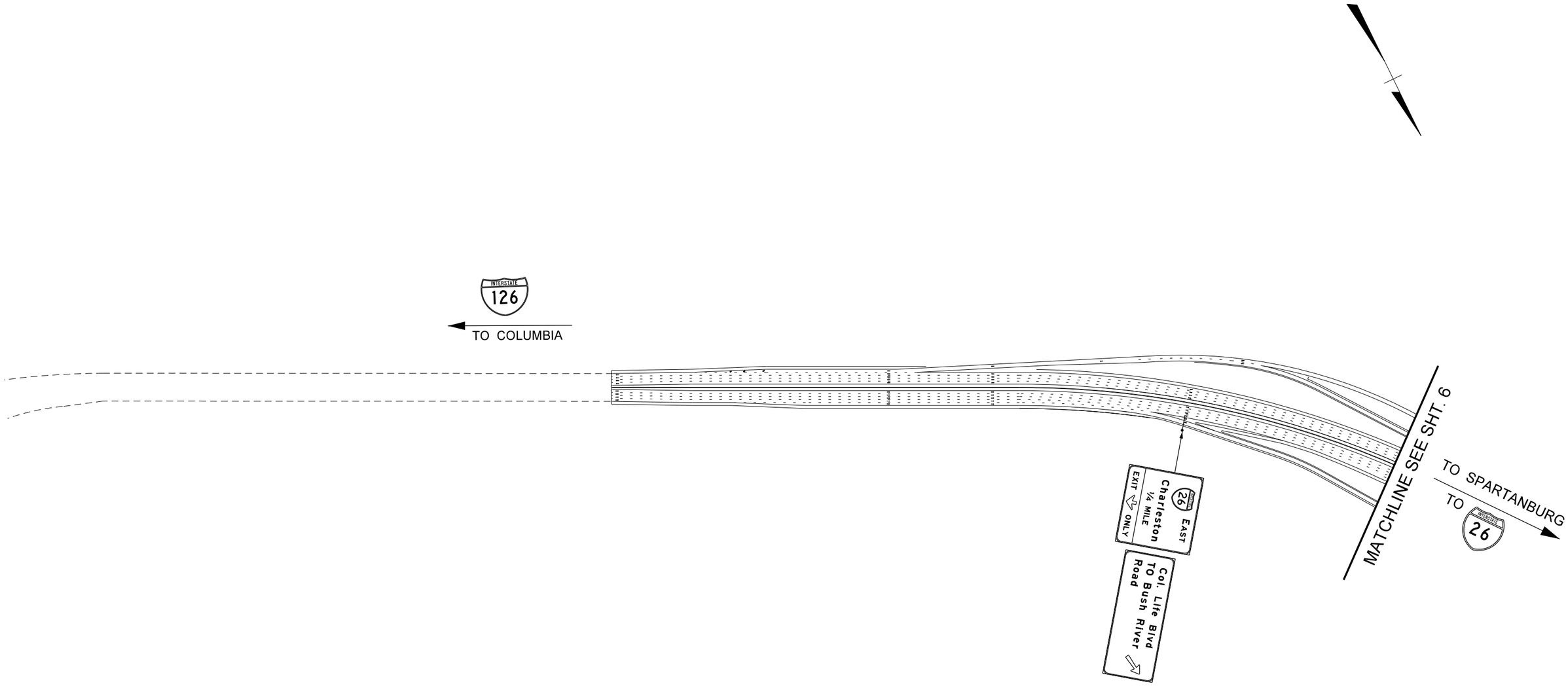

CAROLINA CROSS ROADS
CONCEPTUAL SIGNING ALONG INTERSTATE 126

0 100 200 400 600 800 1000

SCALE : 1"=400'

SEE CONCEPTUAL SIGNING ALONG I-20

* INDICATES SIGNS ALONG I-20

TO AUGUSTA

INTERSTATE 20

EXIT 108
EAST
126 76
Columbia
Colonial Life Blvd
To Bush River Rd
EXIT ONLY

EAST
26
Charleston

EXIT 108
EAST
126 76
Columbia
Colonial Life Blvd
To Bush River Rd
1/4 MILE
EXIT ONLY

EAST
26
Charleston

EXIT 107 A
WEST
20
Augusta

EAST
20
Florence

EXIT 107 A
WEST
20
Augusta

EAST
20
Florence

EXITS 107 A-B
20
Augusta
Florence

EAST
Charleston
26
Columbia
126
Col. Life Blvd
To Bush River Rd

EXIT 108
EAST
126 76
Columbia
Colonial Life Blvd
To Bush River Rd
3/4 MILE

EAST
26
Charleston

ST. ANDREWS RD

EXITS 107B-A

INTERSTATE 26
TO CHARLESTON

EXIT 64 A
Broad River Road 1/4 MILE EXIT ONLY

TO EAST Florence

EXIT 64 B
Spartanburg WEST EXIT ONLY

EXIT 64 C
Charleston
Columbia

EXIT 64 D
Bush River Road

EXIT 108

EXIT 107B

EXIT 107A

EXIT 106

EXIT 64 E
Broad River Road 1 MILE EAST

TO Florence

EXIT 64 A
Broad River Road 1/4 MILE EXIT ONLY

EXIT 64 B
Spartanburg WEST EXIT ONLY

EXIT 64 C
Charleston
Columbia

EXIT 64 D
Bush River Rd
TO EAST Florence

MATCHLINE SEE SHT. 6

MATCHLINE SEE SHT. 9

St. Andrews Road 1/4 MILE EXIT ONLY
EXIT 106

TO Florence EAST

Broad River Road 1/4 MILE EXIT ONLY
176
EXIT 64 A

SEE CONCEPTUAL SIGNING ALONG I-20

TO FLORENCE
INTERSTATE 20

EXIT 64 C
EXIT 64 B

EAST
26
WEST
Spartanburg

EAST
26
76
WEST
Spartanburg

St. Andrews Road 1/4 MILE EXIT ONLY
EXIT 106

St. Andrews Road EXIT ONLY
EXIT 106

St. Andrews Road EXIT ONLY
EXIT 106

TO SPARTANBURG
INTERSTATE 26

ST. ANDREWS RD.

CAROLINA CROSS ROADS
CONCEPTUAL SIGNING ALONG INTERSTATE 26

0 100 200 400 600 800 1000

SCALE : 1"=400'

SHEET 8

MATCHLINE SEE SHT. 8

EXITS 107A-B
20
Augusta
Florence
EXIT ONLY

EXIT 106
St Andrews
Road
EXIT ONLY

EXIT 107A-B
20
Augusta
Florence
¼ MILE
EXIT ONLY

26
76
EAST
Charleston

EXIT 108
EXIT
106
26
76
EAST
Columbia
Col. Life Blvd
To Bush River Rd
1 MILE

INTERSTATE
26
TO CHARLESTON

EXIT 106
St Andrews
Road
½ MILE
EXIT ONLY

EXIT 107A-B
20
Augusta
Florence
¾ MILE
EXIT ONLY

26
76
EAST
Charleston

St Andrews Rd ¾
I-20 1
I-126 1¾

TO SPARTANBURG
INTERSTATE
26

Piney Grove Rd 2¼
Harbison Blvd 3½
Lake Murray Blvd 4½

Piney Grove Rd ½
Harbison Blvd 1¾
Lake Murray Blvd 2¾

26
76
WEST
Spartanburg

Piney Grove
Road
1 MILE
EXIT
ONLY

EXIT 104

MATCHLINE SEE SHT. 10

CAROLINA CROSSROADS
CONCEPTUAL SIGNING ALONG INTERSTATE 26

0 100 200 400 600 800 1000

SCALE : 1"=400'

MATCHLINE SEE SHT. 9

TO CHARLESTON

INTERSTATE 26

EXITS 107A-B
AUGUSTA 20
Augusta
Florence
1 1/4 MILE
EXIT ONLY

PINEY GROVE RD

EXIT 104

EXIT 104
Piney Grove
Road
EXIT ONLY

EXIT 107
AUGUSTA 20
Augusta
Florence
2 MILES

TO SPARTANBURG

INTERSTATE 26

MATCHLINE SEE SHT. 11

EXIT 104

Harbison Blvd
3/4 MILE
EXIT 103

PINEY GROVE RD

AUGUSTA 26 26 WEST
Spartanburg
Piney Grove
Road
1/2 MILE
EXIT ONLY
EXIT 104

AUGUSTA 26 26 WEST
Spartanburg
Piney Grove
Road
EXIT ONLY
EXIT 104

AUGUSTA 26 26 WEST
Spartanburg
Harbison Blvd
1/2 MILE
EXIT ONLY
EXIT 103

CAROLINA CROSSROADS
CONCEPTUAL SIGNING ALONG INTERSTATE 26

0 100 200 400 600 800 1000

SCALE : 1"=400'

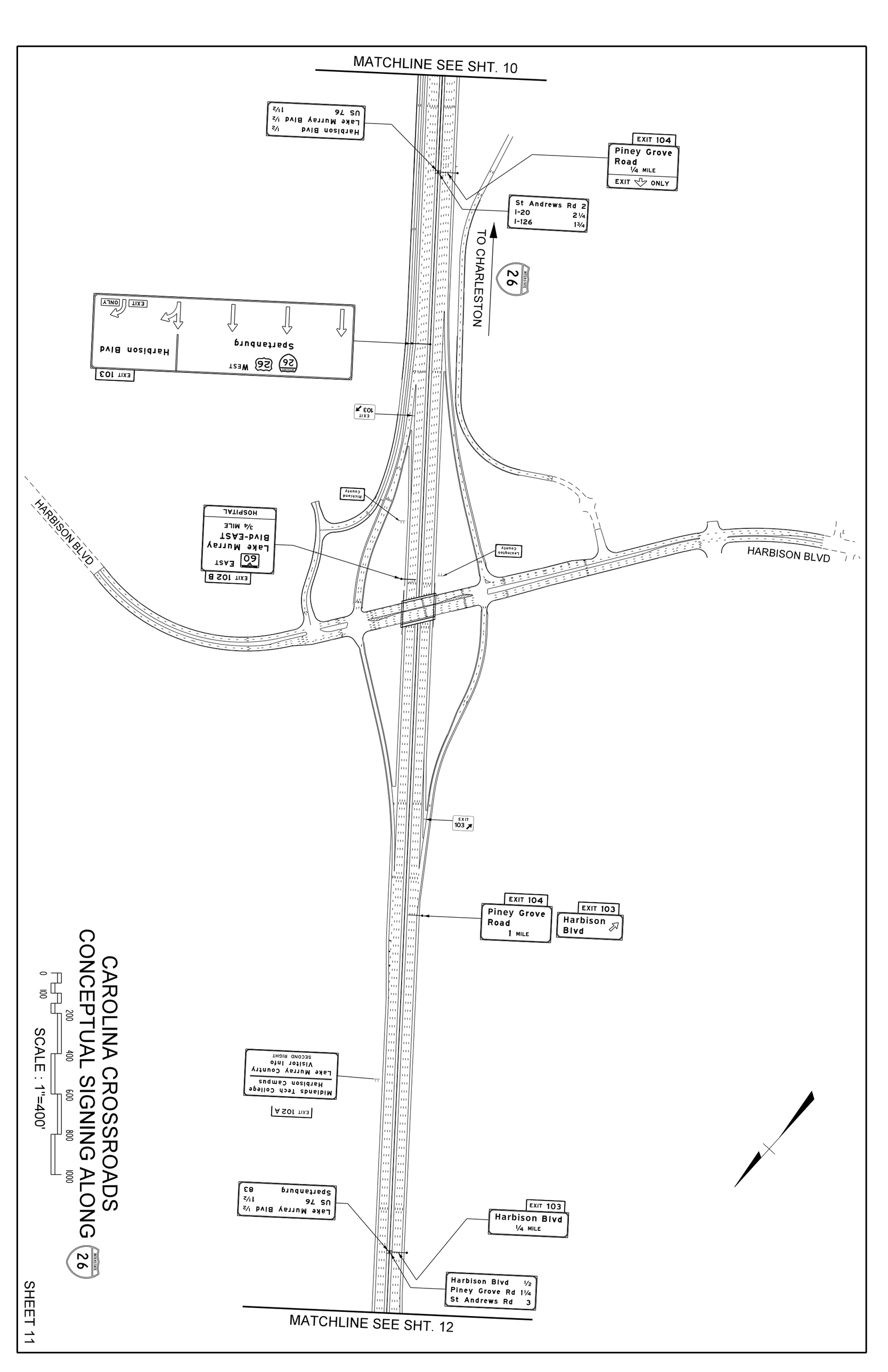

CAROLINA CROSSROADS
CONCEPTUAL SIGNING ALONG 26

SCALE : 1"=400'

0 100 200 400 600 800 1000

SHEET 11

MATCHLINE SEE SHT. 11

TO CHARLESTON

TO SPARTANBURG

MATCHLINE SEE SHT. 13

LAKE MURRAY BLVD

LAKE MURRAY BLVD

EXIT 102 B
60 EAST
Lake Murray Blvd-EAST
HOSPITAL

EXIT 103
Harbison Blvd
1 MILE

EXIT 102 A
60 WEST
Lake Murray Blvd-WEST
Irmo

EXIT 102 B
60 EAST
Lake Murray Blvd-EAST
1/4 MILE
HOSPITAL

EXIT 102 A
60 WEST
Lake Murray Blvd-WEST
1/4 MILE

EXIT 102 B
60 EAST
Lake Murray Blvd-EAST
HOSPITAL

EXITS 101 B-A
76 176
Ballentine
White Rock
3/4 MILE

EXIT 102 A
60 WEST
Lake Murray Blvd-WEST
Irmo

EXIT 101 A
76 176 WEST
Ballentine
White Rock
1/4 MILE

EXIT 101 B
176 EAST
Broad River Road-EAST

CAROLINA CROSSROADS
CONCEPTUAL SIGNING ALONG 26

0 100 200 400 600 800 1000

SCALE : 1"=400'

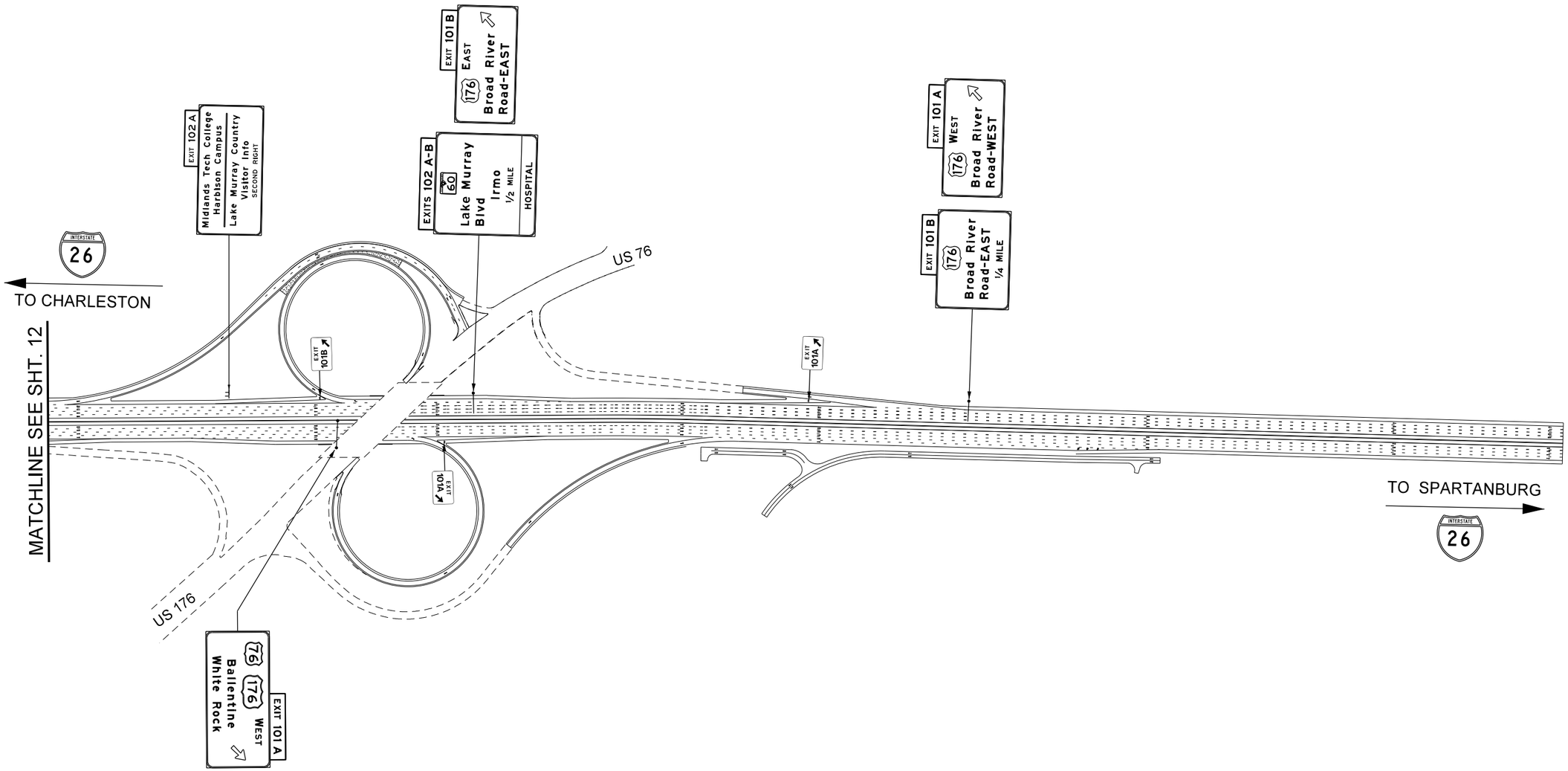

CAROLINA CROSSROADS
CONCEPTUAL SIGNING ALONG INTERSTATE 26

0 100 200 400 600 800 1000

SCALE : 1"=400'