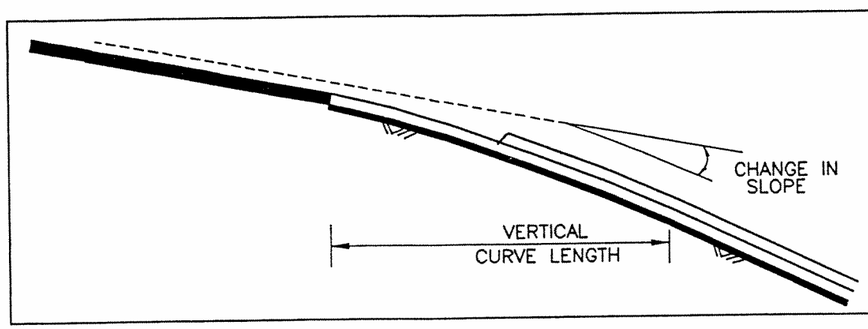

CHANGE IN SLOPE	VERTICAL CURVE LENGTH
5.0%–7.5%	10'
7.5%–10%	15'
10%–13%	20'
13%–15%	25'
>15%	30'

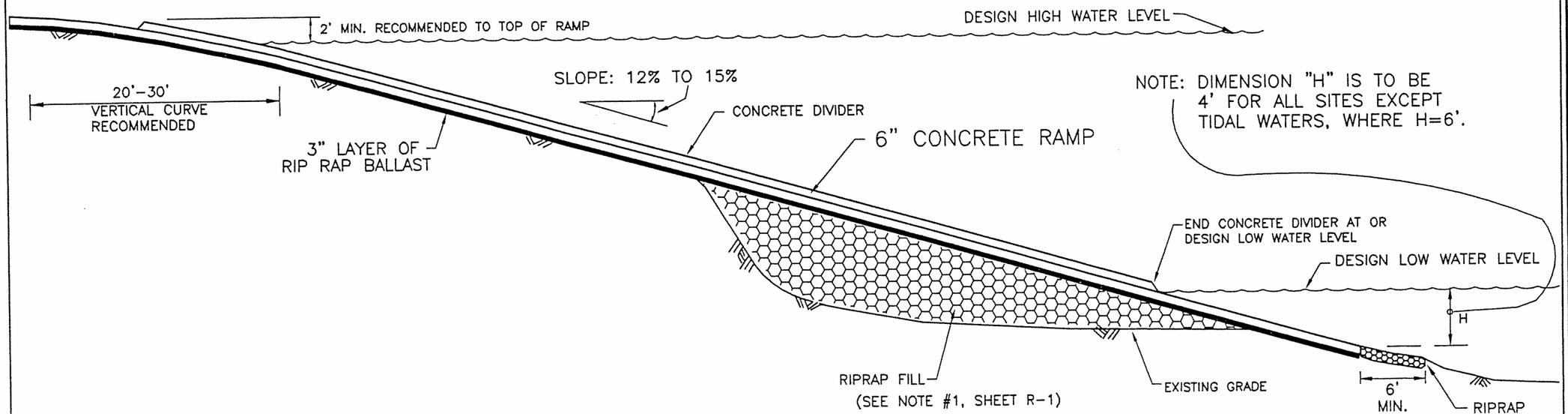

DESIGN WATER LEVELS

	RIVERS	TIDAL WATERS	LAKES
DESIGN HIGH WATER LEVEL:	25-YEAR FLOOD	MEAN HIGHER HIGH WATER	25-YEAR HIGH
DESIGN LOW WATER LEVEL:	25-YEAR LOW FLOW	MEAN LOWER LOW WATER	25-YEAR LOW

SOUTH CAROLINA REGISTERED PROFESSIONAL ENGINEER No. 10548 GERALD E. LONON

PACE ENGINEERING CONSULTANTS, INC.
1813 HAMPTON STREET, P.O. BOX 7561,
COLUMBIA, S.C. 29202

SOUTH CAROLINA DEPARTMENT OF NATURAL RESOURCES

CONCRETE RAMP PROFILE

SOUTH CAROLINA DEPARTMENT OF NATURAL RESOURCES ENGINEERING SECTION

SHEET R-3 OF 5